E-1F9905

FIRE HAZARD ANALYSIS

ENGINEERING REVIEW:
DRAFTER:
CHECKER:
ENGINEER:
SUPERVISOR:

☒ ELECTRONIC APPROVAL

1. ☐ APPROVED-MFG. MAY PROCEED
2. ☐ NOT APPROVED--RESUBMIT FINAL DOCUMENT/DRAWING-MFG. MAY PROCEED ☐ YES ☐ NO
3. ☐ APPROVED INFORMATION NOT CONTROLLED UNDER DESIGN PROCESS
4. ☐ ACCEPTABLE-MAINTAIN AS RECORD (INFO. ONLY)
5. ☐ RESTRICTED FOR WOLF CREEK PLANNING ONLY-MFG. MAY PROCEED ☐ YES ☐ NO

APPROVAL OF THIS DOCUMENT/DRAWING DOES NOT RELIEVE SUPPLIER/CONTRACTOR FROM FULL COMPLIANCE WITH CONTRACT, SPECIFICATIONS AND/OR PURCHASE ORDER REQUIREMENTS.

COMMENTS:

P.O.#:	VENDOR MANUAL: PAGE:
CHANGE PACKAGE #: **012513**	INCORPORATED CHANGE DOCUMENT(S): **WIP-E-1F9905-010-A-1**

REV. #		DC RELEASED:
11	WOLF CREEK NUCLEAR OPERATING CORPORATION	DC7 07/29/2021

COMPONENT NUMBER(S)

COMPONENT NUMBERS ARE FOR INITIAL (REV, W01) DATA LINKING ONLY. ADDITIONAL COMPONENT LINKS ARE MADE IN DATABASE ONLY.

TABLE OF CONTENTS

1.0	PURPOSE	3
2.0	SCOPE	3
3.0	REFERENCES	3
4.0	FHA PROCESS	5
ATTACHMENT A	PLANT FIRE AREAS PROVIDED WITH A FHA	16
ATTACHMENT B	FIRE HAZARD ANALYSIS	30
ATTACHMENT C	NON-SAFETY RELATED SITE STRUCTURES	280

1.0 PURPOSE

1.1 The purpose of the Fire Hazard Analysis (FHA) is to provide an evaluation of the effects of postulated fires within Wolf Creek Generating Station (WCGS). The overall intent of the FHA is to demonstrate that any single plant fire will not negatively affect post fire safe shutdown (PFSSD) capability, or result in a radiation release that exceeds 10 CFR Part 20 limits. The analysis was performed to demonstrate that WCGS comparison requirements to 10 CFR 50 Appendix R are satisfied.

1.2 This document supersedes the WCGS FHA that was historically maintained within Appendix 9.5B (Sections 9.5B.7 and 9.5B.8) of the USAR.

2.0 SCOPE

2.1 FHA for each plant Fire Area identified in Attachment A. This includes all plant areas containing PFSSD equipment/circuits and non-safety plant areas that present a potential exposure hazard to areas containing PFSSD equipment/circuits due to proximity.

3.0 REFERENCES

3.1 BTP APCSB 9.5-1 Appendix A, Guidelines for Fire Protection for Nuclear Power Plants Docketed Prior to July 1, 1976 (USAR Appendix 9.5A)

3.2 10 CFR 50 Appendix R, Fire Protection Program For Nuclear Power Facilities Operating Prior to January 1, 1979 (USAR Appendix 9.5E)

3.3 NRC Letter dated September 30, 1976 - Fire Protection Evaluation Wolf Creek Generating Station, Unit No. 1

3.4 NRC Letter dated October 21, 1981 – Appendix R of 10 CFR 50 Fire Protection Rule

3.5 NUREG-0881, Safety Evaluation Report Related to the Operation of Wolf Creek Generating Station Unit No. 1

3.6 NUREG/CR-4527, An Experimental Investigation of Internally Ignited Fires in Nuclear Power Plant Control Cabinets: Part 1: Cabinet Effects Tests

3.7 NUREG/CR-4527, An Experimental Investigation of Internally Ignited Fires in Nuclear Power Plant Control Cabinets: Part 2: Room Effects Tests

3.8 NUREG/CR-4596, Screening Tests of Representative Nuclear Power Plant Components Exposed to Secondary Environments Created by Fires, June 1986

3.9 NUREG/CR-6476, Circuit Bridging of Components By Smoke, October 1996

3.10 Regulatory Guide 1.29, Seismic Design Classification

3.11 Regulatory Guide 1.75, Physical Independence of Electric Systems

3.12 SLNRC 82-046, Fire Protection Review, dated November 15, 1982 [SNUPPS Control Room Fire Hazards Analysis]

3.13 SLNRC 84-109, Fire Protection Review, dated 8/23/1984 [Alternate Shutdown Response Plan]

3.14 ASTM D 3286-1973, Standard Test Method for Gross Calorific Value of Coal and Coke by the Isoperibol Bomb Calorimeter

3.15 ASTM E 84-1976, Standard Test Method for Surface Burning Characteristics of Building Materials

3.16 ASTM E-119, Standard Test Methods for Fire Tests of Building Construction and Materials

3.17 ASTM E-152, Standard Methods of Fire Tests of Door Assemblies

3.18 UL-10B, Standard for Safety Fire Tests of Door Assemblies

3.19 UL-555, Standard for Fire Dampers

3.20 IEEE-383, Standard for Qualifying Class 1E Electric Cables and Field Splices for Nuclear Power Generating Stations

3.21 IEEE-634, Standard for Cable Penetration Fire Stop Qualification Test

3.22 DE88003808 (SAND87-2484C), Investigation of Smoke Corrosivity in Nuclear Power Plant Equipment

3.23 M-663-00017A, Fire Protection Evaluations for Unique or Unbounded Fire Barrier Configurations

3.24 AI 26A-003, Regulatory Evaluations (Other than 10 CFR 50.59)

3.25 AP 10-106, Fire Preplans

3.26 AP 15C-004, Preparation, Review, and Approval of Procedures, Instructions and Forms

3.27 E-15000, Electrical Cable and Raceway List

3.28 E-1F9900, Post Fire Safe Shutdown Manual Actions

3.29 E-1F9910, Post Fire Safe Shutdown Fire Area Analysis

3.30 XX-E-013, Post Fire Safe Shutdown Analysis

3.31 XX-X-004, Combustible Loading Information Program

3.32 Drawing Series A-1800, Fire Delineation

3.33 Drawing Series M-12LF, P&IDs for Hot Machine Shop, Auxiliary, Radwaste, Fuel, Control, and Reactor Buildings Floor and Equipment Drain System

3.34 Drawing Series M-12LE, P&IDs for Auxiliary Boiler Room, Turbine Building, Control Building, Diesel Generator Building, Tendon Access Gallery, and Auxiliary Feedwater Pump Rooms Oily Waste Drain System

3.35 Drawing E-11013, Installation, Inspection and Testing Details for Electrical Equipment and Cable

3.36 EPRI Technical Report TR-100370, Fire-Induced Vulnerability Evaluation (FIVE)

3.37 PIR 2002-2246, Removal of Fire Protection Description from the USAR.

3.38 KC-M-006, Water-Based Fire Protection System and Standpipe System Hydraulic Calculations

4.0 FHA PROCESS

4.1 General

4.1.1 Attachment A identifies the following:

- All plant Fire Areas that are provided with a FHA.
- Rooms within each Fire Area.
- Rooms provided with automatic detection.
- Rooms provided with automatic suppression.
- Rooms that are within the Radiological Controlled Area (RCA) during normal operations.
- Rooms containing PFSSD circuits.

4.1.2 Attachment B documents the FHA for each Fire Area identified in Attachment A.

4.1.3 Attachment C identifies the Non-Safety Related Site Structures and their distance to the nearest structure containing PFSSD equipment and/or circuits. These structures are remotely located from structures containing PFSSD equipment/circuits, and as such, a postulated fire within these structures does not pose a hazard to equipment and/or circuits required for PFSSD.

4.2 Background

4.2.1 The NRC originally requested that WCGS perform a fire hazard analysis for the facility in a letter dated September 30, 1976. This letter also requested that a comparison to APCSB 9.5-1 Appendix A be provided. NRC letter dated October 21, 1981 requested that WCGS provide a comparison to 10 CFR 50 Appendix R. These requests were addressed via information provided within the following appendices of the SNUPPS Final Safety Analysis Report (FSAR) and WCGS Site Addendum:

- Appendix 9.5A – Comparison to APCSB 9.5-1 Appendix A.
- Appendix 9.5B – Fire Hazards Analysis.
- Appendix 9.5E – Comparison to 10 CFR 50 Appendix R.

Additionally, a detailed report entitled “SNUPPS Control Room Fire Hazard Analysis” was submitted to the NRC by letter SLNRC 82-046. This report addressed transient fires originating between various panels in the Control Room.

Subsequent to the above Control Room FHA report, the criteria for a Control Room fire was modified by the NRC. In response to these changes, a new detailed report entitled "SNUPPS Response Plan for Immediate Evacuation of the Control Room Due to Fire" was submitted to the NRC via SLNRC 84-0109.

NRC questions from the 1977-79 time frame concerning fire protection information within the FSAR and WCGS Site Addendum (including the SNUPPS/Wolf Creek responses to the questions) were documented within FSAR Appendices 9.5C and 9.5D. A future revision to the FHA will provide a reference to the current document addressing the issue of concern. This revision will occur in parallel with the release of the Fire Protection Program Manual, which is being developed in response to PIR 2002-2246.

Ultimately the FHA and other supporting fire protection within the SNUPPS FSAR and WCGS Site Addendum received NRC approval, as documented in Operating License Condition 2.C.(5)(a).

Wolf Creek has historically maintained facility fire protection information within what is now termed the Updated Safety Analysis Report (USAR), which is a consolidation of the SNUPPS FSAR and WCGS Site Addendum. Revisions have been incorporated as necessary to address plant changes, including enhancements to the original response plan provided in SLNRC 84-0109 for Control Room evacuation.In effort to eliminate repetitive information and provide a more efficient and consistent means to update and control fire protection program documents, the majority of USAR Appendix 9.5B is superseded by this document. The extent of USAR Appendix 9.5A, 9.5B, and 9.5E incorporation within this document is as follows:

- <u>Appendix 9.5A – Comparison to APCSB 9.5-1 Appendix A</u>

  Applicable elements of the comparison have been incorporated within this document. Specific paragraphs within this document that address an APCSB 9.5-1 Appendix A comparison issue are provided with a parenthetical reference to APCSB 9.5-1 Appendix A, including the respective paragraph number addressed. The current comparison provided in Appendix 9.5A of the USAR will remain active until release of the Fire Protection Program Manual, which is being developed in response to PIR 2002-2246.

- <u>Appendix 9.5B – Fire Hazards Analysis</u>

  The entire appendix was incorporated into this document with the exception of the following:

  - With limited exception, PFSSD analysis is documented in E-1F9910 with PFSSD supporting information provided by XX-E-013 and E-1F9900. PFSSD capability is specifically addressed within this document for Fire Areas KDB, RW, T-4, T-10, YARD-ESF, and YARD-SU, as these areas were not originally included in the USAR FHA.

  - The evaluation of unique or unbounded fire barrier features, which is documented in M-663-00017A.

FHA revision was provided where necessary to eliminate redundancy, provide clarification, or to strengthen the existing analysis.

- Appendix 9.5E - Comparison to 10 CFR 50 Appendix R

  Applicable elements of the comparison have been incorporated within this document. Specific paragraphs within this document that address an Appendix R comparison issue are provided with a parenthetical reference to Appendix R, including the respective paragraph number addressed. The current comparison provided in Appendix 9.5E of the USAR will remain active until release of the Fire Protection Program Manual, which is being developed in response to PIR 2002-2246.

4.3 Methodology

4.3.1 For each Fire Area analyzed in Attachment B, the topics identified in Sections 4.3.2 through 4.3.8 below, are addressed.

4.3.2 Fire Area Description

1. The Rooms within the Fire Area are identified.

4.3.3 Major Equipment

1. Major equipment within the Fire Area is identified.

4.3.4 Design Features

1. Fire boundary separation from other Fire Areas is discussed.

   a. Fire barrier features separating Fire Areas are 3-hour rated, unless otherwise indicated. Unique or unbounded fire barrier configurations are addressed in M-663-00017A.

2. Passive barrier features within the Fire Area are discussed, where applicable.

4.3.5 Combustible Loading

1. Significant fire hazards within the Fire Area are discussed, where applicable.

2. The cumulative fire hazard classification (Low, Moderate, or High) for the Fire Area is identified. This classification is based on the Room and Fire Area combustible loading tabulation maintained in calculation XX-X-004. Unless indicated otherwise, the specific location of combustible material within a room is not a significant factor in the combustible loading analysis.

The three combustible loading classifications are defined as follows:

- LOW: $\leq$ 100,000 Btu/ft^2
- MODERATE: > 100,000 Btu/ft^2 and $\leq$ 200,000 Btu/ft^2
- HIGH: > 200,000 Btu/ft^2

Typical combustibles include Class A and Class B hazards. Class A hazards are ordinary combustible materials such as wood, paper, fabric, nylon, plastic, rubber, and cable insulation. Class B hazards are flammable and combustible liquids and gases such as cleaning solvent, diesel fuel oil, lube oil, oxygen, and acetylene.

A significant amount of fixed combustibles in the plant is electric cable insulation. The specific calorific value of each type and size of cable was used in calculating the maximum heat leading for each Fire Area.

Class A combustibles in closed metal containers located in general corridor areas of the plant may not be considered to contribute to the fuel load in that area. Their contribution is considered based on the adjacent combustible loads and the probability of a long duration fire.

Although fire hazard effects on exposed conduits have been evaluated for safe shutdown, electric cable inside metal conduit has not been considered as contributing to the fire loading in the hazard areas.

3. Combustible Control Zones that are administratively maintained to control transient combustibles in the separation area between redundant PFSSD components/circuits are discussed, where applicable.

4. In some instances cable chase fire loading is Moderate or High with an equivalent fire severity either near or exceeding three hours. This is the case due to the small floor area in relation to the combustibles presented by cable and postulated transient combustibles. Under normal situations, no ignition sources are present within cable chases, and introduction of a transient ignition source is administratively controlled. As previously identified, cable is IEEE-383 rated. Electric Power Research Institute (EPRI) technical report TR-100370, Fire-Induced Vulnerability Evaluation (FIVE), identifies that such cable is not typically considered a fire source initiator due to a low ignition frequency considering past nuclear power plant experience and fire tests. Based on this and the defense in depth fire protection features discussed in the applicable Fire Area analysis section, the development of a cable chase fire severity that would challenge fire barrier integrity is not considered credible.

5. Administrative controls are in place to limit the use and location of transient combustibles. Based on these limits, the maximum increased fire loading permitted in any fire area will not exceed the area's fire protection capabilities. Where transient combustibles exceed the amounts qualified in Calculation XX-X-004, additional administrative controls are implemented commensurate with the hazard.

4.3.6 Fire Protection

1. Automatic detection features are discussed.

   a. Automatic fire and smoke detection systems are provided throughout the plant on the basis of the Attachment B fire hazards analysis and consequences of specific postulated fires. Attachment A identifies the automatic detection protection arrangement for each room that is encompassed within the Attachment B FHA. In each case the FHA considers the impact to safe shutdown where no or partial automatic detection is provided.

2. Automatic suppression features are discussed.

   a. Automatic suppression systems are provided in the plant on the basis of the Attachment B fire hazards analysis and consequences of specific postulated fires. Attachment A identifies the automatic suppression protection arrangement for each room that is encompassed within the Attachment B FHA. In each case the FHA considers the impact to safe shutdown where no or partial automatic suppression is provided.

   b. KC-M-006 calculates the fire water delivery system supply, sprinkler system demands, standpipe demands, and evaluates the overall hydraulic adequacy of the fire water suppression systems.

3. Typical fire alarm system annunciation is identified in Table 4.3.6.3.

4. Suppression equipment available in the area for manual fire fighting is discussed.

5. Fire Area accessibility is discussed.

6. Fire water drainage is discussed.

   a. All areas of the plant protected with water suppression systems have sufficient drainage capacity to prevent the run-off of water into other Fire Areas such that it would affect equipment operability. All drains throughout the plant drain to their respective building sumps, from there, sump pumps transfer the water to the radwaste system.

   b. The method by which sprinkler systems control fire is termed “fire control” approach. This method anticipates that a certain number of sprinklers will be opened surrounding the fire event area. All sprinkler heads installed in a given Fire Area will not open for a given fire event. Table 16.3.1 from the NFPA Handbook (20th Edition) reveals that the majority of fires are suppressed by a small number of sprinkler heads (10 or less). Additionally, hose stream application for a fire event would be controlled and of a short duration.

Table 4.3.6.3, Typical Fire Alarm System Annunciation

System Type and Condition	Local	Control Room
General Area Detection		
General area detection or manual pull station activated	X Area notification appliance(s)	X
Detector trouble or circuit fault	None	X
Automatic Wet Pipe Sprinkler		
System discharge	X Notification appliance controlled at local junction box.	X
Pressure switch circuit fault	None	X
Automatic Preaction Sprinkler		
Detection activated	X Notification appliance controlled by release panel, which is activated concurrent with system discharge	X
System discharge (automatic)		X
System discharge (manual/pneumatic)	None	X
Low supervisory air pressure	None	X
General trouble condition	None	X
Automatic Water Spray Sprinkler (Single Zoned Detection)		
Detection activated	X Notification appliance controlled by release panel, which is activated concurrent with system discharge	X
System discharge (automatic)		X
System discharge (manual/pneumatic)	None	X
General trouble condition	None	X
Automatic Water Spray Sprinkler (Crossed Zoned Detection)		
1st zone detector activated	X Notification appliance controlled by release panel	X
2nd zone detector activated	Notification appliance already activated by 1st detector in alarm	X
System discharge (automatic)	None	X
System discharge (manual/pneumatic)	None	X
General trouble condition	None	X
Automatic Halon Suppression (Crossed Zoned Detection)		
1st zone detector activated	X Area notification appliance	X
2nd zone detector activated	Notification appliance already activated by 1st detector in alarm	X
System discharge (automatic)	X Notification appliance controlled by release panel	X
System discharge (manual/pneumatic)	X Notification appliance controlled by release panel	X
HVAC isolation	None	X Visual
General trouble condition	X	X
Fire Water Valve Supervision		
Fire Water system isolation valve out of normal position	None	X
Circuit fault	None	X

4.3.7 Isolation and Smoke Removal

1. A description of fire isolation is provided.

2. AP 10-106, *Fire Preplans*, identifies fixed HVAC supply and exhaust fans servicing each Fire Area. Smoke removal tactics are dependent on several variables and fire ground conditions including wind patterns, fire intensity, smoke dispersion rate, location of the fire within the Fire Area, location of redundant PFSSD equipment, availability of normal exhaust, and power supply availability for portable ventilation. Therefore, it is not considered feasible to discuss each potential ventilation scenario within a given Fire Area. Portable ventilation strategies and tactics are addressed by the Fire Brigade training program.

   NUREG/CR-4596 demonstrates that exposure to the corrosive products of a smoke environment can result in equipment damage. Therefore, the potential to expose redundant PFSSD equipment to a smoke environment is an important consideration during smoke control and removal activities. However, corrosion from a secondary smoke environment is not expected to be a factor that impacts immediate PFSSD capability. This is substantiated by DE88003808 (SAND87-2484C), which identifies that corrosion from a smoke environment is an event that presents a problem on a time scale of days or even weeks. Additionally, NUREG/CR-6476 identifies that the most important fire scenarios from a plant risk perspective occur during time frames of roughly one hour or less. Thus, the issue of longer term exposures are more important to the question of general post-fire equipment reliability, which is ultimately a secondary concern to that of achieving initial safe shutdown.

4.3.8 Analysis

1. Fire Suppression

   a. A discussion of the fire suppression systems' (fixed and manual) use and effectiveness in extinguishing a fire is provided.

2. Safe Shutdown Capability

   a. The safe shutdown design basis is the cold shutdown operational mode. If a fire hazard within the plant necessitates the plant being placed in a safe condition, the reactor will first be taken to a hot shutdown condition. An extended hot shutdown condition prior to achieving cold shutdown in order to perform repairs or temporary routings, if required, is a stable, safe condition.

   b. USAR Section 7.4 describes in detail how safe shutdown can be performed with safety related equipment, and provides a discussion of component redundancies and system diversity for achieving the safe shutdown functions. System and component redundancy for the various support and auxiliary systems is provided in the associated USAR section.

   c. The fuel storage pool cooling system components are listed as being required for safe shutdown for the fire hazards analysis of the Fuel

Building. However, they are neither required for safe shutdown nor are they associated circuits as defined in10 CFR 50 Appendix R, Section III.G. They have been included to ensure that repairs are not required for fires in the Fuel Building. Fuel storage pool cooling system component failures resulting from fires in the Auxiliary and Control Buildings are not evaluated in the FHA or E-1F9910.

d. Associated circuits were reviewed as if they were redundant safe shutdown items.

e. The determination of safe shutdown capability following a fire is based on the PFSSD Fire Area analysis documented in E-1F9910 and the PFSSD manual action feasibility analysis documented in E-1F9900, coupled with the FHA evaluation addressing fire hazards, fire protection features, and suppression capability. PFSSD capability is satisfied when analysis demonstrates that Wolf Creek's comparison response to 10 CFR 50 Appendix R, Section III.G is met.

4.4 Assumptions

4.4.1 The following assumptions were made in accordance with 10 CFR 50 Appendix R, to define the plant conditions for analysis purposes:

1. Only one fire is postulated to occur at any one time. Multiple fires are not postulated.

2. A design basis accident occurring simultaneously with a fire hazard is not assumed.

3. Extreme environmental phenomena, i.e., earthquake, flood, tornado, etc., occurring simultaneously with fire hazard are not assumed.

4. Failure of plant systems and components required for safe shutdown is not postulated unless that equipment is exposed to the fire. Wolf Creek's comparison response to Section III.G.2 of Appendix R is considered to provide an acceptable means to protect redundant safe shutdown equipment. Random single failures are not postulated in safe shutdown systems; only fire-related failures are evaluated. It should be noted that where automatic fire suppression systems are installed, the fire hazards analysis evaluates the effects of a failure of the automatic systems.

5. Loss of offsite power (LOSP) is assumed to occur simultaneously with the fire unless the area has been specifically evaluated to show that a LOSP could not occur as a result of the fire. For alternate shutdown, a LOSP is considered a simultaneous event. Failure of any of the onsite vital power supplies is not assumed unless it is caused as a direct consequence of a fire. Calculation XX-E-013 identifies the Fire Areas were LOSP due to fire is possible.

6. Refer to XX-E-013 and E-1F9910 for additional assumptions that are specific to the PFSSD analysis.

4.5 Fire Effects on Electrical Equipment and Safe Shutdown Information

4.5.1 The following discussions provide information on the WCGS plant design and nomenclature, the assumed effects of fire, and the response of certain devices.

1. Redundant PFSSD mechanical systems are referred to in the analysis as Train A and Train B. Train A is served by electrical separation groups 1 and 3, while Train B is served by electrical separation groups 2 and 4. Electrical separation groups 5 and 6 are typically for non-safety related equipment. However, in limited cases these groups also provide a PFSSD success path.

2. The FHA and supporting documents XX-E-013 and E-1F9910 include the effects of a postulated fire hazard on PFSSD cables, exposed conduit and instrumentation. Embedded conduits are not considered due to the heat sink provided by the encasing barrier. Section 8.3.1.4 of the USAR provides the basis and criteria for the interdependence of redundant systems.

3. If a fire is postulated to cause a short in a circuit and that circuit is protected by an individual overcurrent protection device, that device is assumed to function to clear the fault without further degradation of the power source.

4. Separation of the devices for nuclear safety-related controls and instrumentation is achieved by physical separation, use of fire-resistive cable or barriers between separation groups for the same protective function, in accordance with Regulatory Guide 1.75.

4.6 General Information on Design Features

4.6.1 Redundant equipment and circuits required for safe shutdown are also protected against the effects of potential exposure fires. These protection features include fixed fire detection and suppression systems, fire barriers, control of combustibles, use of fire-resistive cable, and physical separation. The design goal for safety-related areas outside of the Containment was to provide the equivalent of a 3-hour rated fire barrier between redundant trains, as described in 10 CFR 50, Appendix R, Paragraph III.G.2.a. Where this was not possible, credit was taken for the detection and suppression systems installed in the plant, the use of fire-resistive cable, and compliance to the provisions of Appendix R, Paragraphs III.G.2.b and c, was addressed.

4.6.2 In most fire areas, the boundaries are defined by walls, floors, and ceilings. In the Reactor Building, however, such natural boundaries do not completely enclose localized fire hazards. For the Fire Areas inside of the Containment, the provisions of 10 CFR 50 Appendix R, Paragraphs III.G.2.d, e, and f were addressed.

4.6.3 Emergency lighting is provided for areas required for operation of safe shutdown equipment and for access and egress to those areas. It consists of sealed beam units with individual 8-hour minimum battery power supplies.

4.6.4 Safety-related cable in the general plant area is qualified to IEEE-383-1974. All single conductors inside control panels meet the flame resistance requirements of IPCEA S-19-81 or S-61-402.

4.6.5 Noncombustible materials are defined to meet one of the following criteria:

1. Material of which no part will burn.

2. Surface materials not over 1/16-inch thick with a flame spread rating of 50 or less as measured by ASTM E 84- 1976.

3. Interior finishes which meet 4.6.5.1, or are listed by an approved organization for surface flame spread of 25 or less per ASTM E 84-1976 and potential heat release of 3,500 Btu/lb or less per ASTM D 3286-1973.

4.6.6 Lighting, fire protection, communication and specialty cables which are flame retardant but not qualified to IEEE-383-1974; and other communication and specialty cable, such as cords and computer ribbon cable, are limited in use in the following manner:

1. Covered with a flame retardant coating per the requirements of (BTP) APCSB 9.5-1, Appendix A; or

2. Installed in a totally enclosed metal conduit system; or

3. Consist of short lengths of exposed cable between the end of a totally enclosed metal conduit system routed to a component and the connection to the component (e.g. at light fixtures and public address devices; or

4. Located in non-safety-related areas which are separated from safety-related areas by fire rated boundaries; or

5. Evaluated on a case-by-case basis for adverse impact on the fire protection program.

4.7 PFSSD Historical Information

Note:

The following historical information regarding the initial PFSSD analysis process was extracted verbatim from USAR Section 9.5B.6 (Rev. 14) so that the information would be readily available for reference purpose. E-15000 (Set-Route) is now the control means for PFSSD circuits.

The list of safe shutdown components shown on [USAR] Table 9.5B-2 was provided to electrical design engineers who located all associated circuits through the review of physical drawings and electrical schematics. Each circuit associated with these devices was then flagged as being safe shutdown related (following a fire) in the master electrical raceway routing program/data base E0580. This program is utilized to route the scheduled power block cable at WCGS. It ensures that train separation is maintained and provides the most direct/suitable routing for circuits.

After the E0580 data base was updated, a special program (Electrical Fire Hazards Analysis Program [EFHAP]) was run to produce a listing of safe shutdown circuits by fire area and room number, and by electrical separation group. This listing also included "from" and "to" information for each circuit. When a safe shutdown incompatibility was determined to exist, a failure modes analysis was performed on the circuit, the physical location(s) of the circuits were evaluated, the availability of an alternate (diverse) shutdown system was identified, and/or the need for a rated fire barrier wrap was evaluated.

The need for a fire wrap was determined based on the installed detection and suppression systems and the physical distance separating the incompatible circuits. A summary of the final evaluation for each area is provided in Section X.X.7.2 of each fire area described in [USAR] Appendix 9.5B (where "X.X" identifies the fire area).

Since the power block safety-related circuits are all routed in the design office through the application of computer technology and the EFHAP listings were generated from the base E0580 program, it has been determined that the inclusion of listings of conduit and raceway numbers in the USAR descriptions of each fire area is inappropriate. These listings would be of no benefit to any USAR holder or reviewer. The listings would be voluminous and add several hundred pages to the fire hazards analyses.

4.8 FHA Revision

4.8.1 The FHA is part of the “Approved Fire Protection Program.” As discussed in Operating License Condition 2.C.(5)(b), changes are allowed to the Approved Fire Protection Program provided they do not adversely affect the capability to achieve and maintain PFSSD. Therefore, technical changes to this analysis document require an evaluation in accordance with AI 26A-003. This evaluation, which requires Plant Safety Review Committee (PSRC) approval, is necessary to determine if proposed technical changes require prior NRC approval.

ATTACHMENT A
PLANT AREAS PROVIDED WITH A FIRE HAZARD ANALYSIS
(Page 1 of 14)

Fire Area	Rm #	Bldg.	Elev.	Description	Auto. Detection	Auto. Suppression	PFSSD Circuits	RCA (Typ.)	FHA Page
A-1	1101	Aux.	1974-0	General Floor Area No. 1	T	T	Yes	Yes	30
	1102	Aux.	1974-0	Chiller & Surge Tanks Area	T	T	Yes	Yes	
	1103	Aux.	1974-0	Letdown Chiller Heat Exch Room	N (Note 0)	N	No	Yes	
	1104	Aux.	1974-0	Letdown Reheat Heat Exch Room	N (Note 0)	N	No	Yes	
	1105	Aux.	1974-0	Valve Compartment	N (Note 0)	N	No	Yes	
	1106	Aux.	1974-0	Moderating Heat Exch Room	N (Note 0)	N	No	Yes	
	1115	Aux.	1974-0	Normal Charging Pump Rm	T	N	Yes	Yes	
	1120	Aux.	1974-0	General Floor Area No. 2	T	P	Yes	Yes	
	1121	Aux.	1974-0	Access Pit	T	N	No	Yes	
	1122	Aux.	1974-0	General Floor Area No. 3	T	P	Yes	Yes	
	1123	Aux.	1974-0	Passage	N (Note 0)	N	No	Yes	
	1124	Aux.	1974-0	Valve Compartment	N (Note 0)	N	No	Yes	
	1125	Aux.	1974-0	Letdown Heat Exch Room	N (Note 0)	N	No	Yes	
	1128	Aux.	1974-0	Auxiliary Feedwater Pump Room	T	N	Yes	Yes	
	1129	Aux.	1974-0	Aux Steam Cond Recovery & Storage Tank	T	N	Yes	Yes	
	1130	Aux.	1974-0	North Corridor	T	P	Yes	Yes	
	1201	Aux.	1988-0	Vestibule	T	N	No	Yes	
	1202	Aux.	1988-0	Access Area B & Chiller Surge Tank Area	N	N	Yes	Yes	
	1203	Aux.	1988-0	Pipe Space B	N	N	Yes (Cold shutdown only)	Yes	
	1204	Aux.	1988-0	Pipe Space A	N	N	Yes (Cold shutdown only)	Yes	
	1205	Aux.	1988-0	Access Area A	N	N	No	Yes	
	1203A	Aux.	1988-0	Electrical Chase	T	T	Yes	Yes	
A-2	1111	Aux.	1974-0	Residual Heat Removal Pump Room A	T	N	Yes	Yes	33
	1112	Aux.	1974-0	Containment Spray Pump Room A	T	N	Yes	Yes	
	1113	Aux.	1974-0	Safety Injection Pump Room A	T	N	Yes	Yes	
	1114	Aux.	1974-0	Centrifugal Charging Pump Room A	T	N	Yes	Yes	
A-3	1116	Aux.	1974-0	Boric Acid Tank Room B	T	N	Yes	Yes	37
	1117	Aux.	1974-0	Boric Acid Tank Room A	T	N	Yes	Yes	
	1407	Aux.	2026-0	Boric Acid Batching Tank Area	N	N	Yes	Yes	
A-4	1107	Aux.	1974-0	Centrifugal Charging Pump Room B	T	N	Yes	Yes	40
	1108	Aux.	1974-0	Safety Injection Pump Room B	T	N	Yes	Yes	
	1109	Aux.	1974-0	Residual Heat Removal Pump Room B	T	N	Yes	Yes	
	1110	Aux.	1974-0	Containment Spray Pump Room B	T	N	Yes	Yes	
A-5	1119	Aux.	Stair	Aux. Stair A-1 & A-1A	N	N	No	Yes	43
	1601	Aux.	2064-4	Elevator Machine Room No. 2	N	N	No	Yes	
A-6	1127	Aux.	Stair	Aux. Stair A-2	N	N	Yes	Yes	45
A-7	1126	Aux.	1974-0	Boron Injection Tank & Pump Room	T	N	Yes	Yes	47

ATTACHMENT A
PLANT AREAS PROVIDED WITH A FIRE HAZARD ANALYSIS
(Page 2 of 14)

Fire Area	Rm #	Bldg.	Elev.	Description	Auto. Detection	Auto. Suppression	PFSSD Circuits	RCA (Typ.)	FHA Page
A-8	1301	Aux.	2000-0	Corridor No. 1	P	P	Yes	Yes	49
	1302	Aux.	2000-0	Filter Compartments Typical of 5	N	N	No	Yes	
	1306	Aux.	2000-0	Valve Compartments Typical of 5	N	N	No	Yes	
	1307	Aux.	2000-0	Corridor No. 2	N	N	No	Yes	
	1308	Aux.	2000-0	Valve Compartments Typical of 8	N	N	No	Yes	
	1311	Aux.	2000-0	Sampling Room	T	N	Yes	Yes	
	1312	Aux.	2000-0	Boron Meter & R.C. Activity Monitor Rm	N	Above Ceiling - T Below Ceiling - N	No	Yes	
	1313	Aux.	2000-0	Volume Control Tank Rm	N (Note 0)	N	Yes	Yes	
	1314	Aux.	2000-0	Corridor No. 3	T	N	Yes	Yes	
	1315	Aux.	2000-0	Ctmt Spray Additive Tank Area	T	N	Yes	Yes	
	1318	Aux.	2000-0	Valve Compartment	T	N	Yes	Yes	
	1319	Aux.	2000-0	Demineralizer Compartments Typical of 8	N	N	No	Yes	
	1320	Aux.	2000-0	Corridor No. 4	T	P	Yes	Yes	
	1321	Aux.	2000-0	Exit Vestibule	T	T	No	Yes	
A-9	1309	Aux.	2000-0	Residual Heat Removal Heat Exch Rm B	N (Note 0)	N	Yes	Yes	54
A-10	1310	Aux.	2000-0	Residual Heat Removal Heat Exch Rm A	N (Note 0)	N	Yes	Yes	56
A-11	1335	Aux.	2000-0	Electrical Chase	T	T	Yes	Yes	58
A-12	1336	Aux.	2000-0	Electrical Chase	T	T	Yes	Yes	61
A-13	1325	Aux.	2000-0	Aux Feedwater Pump Rm B	T	N	Yes	No	63
A-14	1326	Aux.	2000-0	Aux Feedwater Pump Rm A	T	N	Yes	No	65
A-15	1331	Aux.	2000-0	Aux Feedwater Pump Rm C	T	N (Note 0)	Yes	No	67
A-16	1401	Aux.	2026-0	Component Cooling Pump & Heat Exch Area B	T	N	Yes	Yes	70
	1402	Aux.	2026-0	Corridor No. 1	T	T	Yes	Yes	
	1406	Aux.	2026-0	Component Cooling Pump & Heat Exch Area A	T	N	Yes	Yes	
	1408	Aux.	2026-0	Corridor No. 2	T	P	Yes	Yes	
A-17	1409	Aux.	2026-0	Electrical Penetration Rm B	T	T	Yes	Yes	74
A-18	1410	Aux.	2026-0	Electrical Penetration Rm A	T	T	Yes	Yes	77
A-19	1504	Aux.	2047-6	Ctmt Purge Exhaust & Mech Equip Rm B	T	N	Yes	Yes	80
	1506	Aux.	2047-6	Ctmt Purge Supply Air Handling Unit A	T	N	Yes	Yes	
	1513	Aux.	2047-6	Control Bldg Vent Supply A/C Unit Rm	T	N	Yes	Yes	
A-20	1502	Aux.	2047-6	Component Cooling Water Surge Tk Area B	P	N	Yes	Yes	83
	1503	Aux.	2047-6	Component Cooling Water Surge Tk Area A	N (Note 0)	N	Yes	Yes	
	1505	Aux.	2047-6	Corridor	T	N	No	Yes	
	1507	Aux.	2047-6	Personnel Hatch Area	T	N	Yes	Yes	
A-21	1501	Aux.	2047-6	Control Rm A/C & Filtration Units B	T	N	Yes	Yes	86
A-22	1512	Aux.	2047-6	Control Rm A/C & Filtration Units A	T	N	Yes	Yes	89

ATTACHMENT A
PLANT AREAS PROVIDED WITH A FIRE HAZARD ANALYSIS
(Page 3 of 14)

Fire Area	Rm #	Bldg.	Elev.	Description	Auto. Detection	Auto. Suppression	PFSSD Circuits	RCA (Typ.)	FHA Page
A-23	1411	Aux.	2037-7	Main Feedwater Rm No. 1	T	N	Yes	Yes	92
	1412	Aux.	2037-7	Main Feedwater Rm No. 2	T	N	Yes	Yes	
	1508	Aux.	2042-0	Main Steam Isolation Valve Rm No. 1	T	N	Yes	Yes	
	1509	Aux.	2042-0	Main Steam Isolation Valve Rm No. 2	T	N	Yes	Yes	
A-24	1323	Aux.	2000-0	Pipe Penetration Rm A	T	N	Yes	Yes	95
A-25	1322	Aux.	2000-0	Pipe Penetration Rm B	T	N	Yes	Yes	97
A-26	1405	Aux.	2026-0	Chemical Storage Area	T	N	Yes	Yes	100
	1415	Aux.	2026-0	I & C Hot Shop	T	N	Yes	Yes	
A-27	1403	Aux.	2026-0	MG Set Room	T	T	Yes	Yes	103
A-28	1413	Aux.	2026-0	Auxiliary Shutdown Panel Room	T	N	Yes	Yes	106
A-29	1304	Aux.	2013-6	Aux Feedwater Pipe Chase	N (Note 0)	N	Yes	No	108
	1324	Aux.	2000-0	Feedwater Pump Valve Compartment No. 1	N (Note 0)	N	Yes	No	
	1327	Aux.	2000-0	Feedwater Pump Valve Compartment No. 2	N (Note 0)	N	Yes	No	
A-30	1305	Aux.	2013-6	Aux Feedwater Pipe Chase	N (Note 0)	N	Yes	Yes	110
	1328	Aux.	2000-0	Feedwater Pump Valve Compartment No. 3	N (Note 0)	N	Yes	Yes	
	1330	Aux.	2000-0	Feedwater Pump Valve Compartment No. 4	N (Note 0)	N	Yes	Yes	
A-31 - This Fire Area has been deleted.									
A-32 - This Fire Area has been deleted.									
A-33	1206	Aux.	1989-0	Pipe Chase	T	T	Yes	No	112
	1207	Aux.	1989-0	Pipe Chase	T	T	Yes	No	
	1329	Aux.	2000-0	Vestibule	N	N	No	No	
A-34	1316	Aux.	2000-0	Seal Water Heat Exch. Valve Comp.	N	N	No	No	115
	1317	Aux.	2000-0	Seal Water Heat Exchanger	N	N	Yes	Yes	
AB-1	4315	Turbine	2000-0	Auxiliary Boiler Room	T	T	No	No	117
C-1	3101	Control	1974-0	Pipe Space & Tank Area	P	T	Yes	Yes	119
	3104	Control	Stair	Control, Stair No. C-2	N	N	Yes	Yes	
	N/A	Control	1974-0	Duct Chase – East Wall of 3101	N	N	No	Yes	
C-2	3106	Control	1974-0	Electrical Chase	T	T	No	Yes	122
C-3	3105	Control	1974-0	Electrical Chase	T	T	No	Yes	124
C-4 - This fire area has been deleted. The area above the suspended ceiling is now included in Fire Areas C-5 and C-6.									

ATTACHMENT A
PLANT AREAS PROVIDED WITH A FIRE HAZARD ANALYSIS
(Page 4 of 14)

Fire Area	Rm #	Bldg.	Elev.	Description	Auto. Detection	Auto. Suppression	PFSSD Circuits	RCA (Typ.)	FHA Page
C-5	3206	Control	1984-0	R.C.A. Egress	T	T	No	No	125
	3212	Control	1984-0	H.P. Lounge Area	T	T	Yes	No	
	3213	Control	1984-0	H.P. Conference Room (West)	T	T	No	No	
	3214	Control	1984-0	Hall	N	T	No	No	
	3216	Control	1984-0	R.P. Calibration Lab 2	T	T	Yes	No	
	3217	Control	1984-0	Men's Toilet	N	N	Yes	No	
	3218	Control	1984-0	Exit Monitor Area	T	T	Yes	No	
	3220	Control	1984-0	Sign In/Out Area	T	N	Yes	No	
	3221	Control	1984-0	Vestibule No. 1	P	T	No	No	
	3222	Control	1984-0	H.P. office	T	T	Yes	No	
	3223	Control	1984-0	Closet	T	T	No	No	
	3224	Control	1984-0	Vestibule No. 2	N	N	Yes	No	
	3231	Control	1984-0	Women's Toilet	N	N	Yes	No	
	None	Control	1984-0	Pipe Chase South of 3213	N	N	N	No	
	None	Control	1984-0	Pipe Chase South of 3216	N	N	N	No	
	None	Control	1984-0	Pipe Chase North of 3217/ 3231	N	N	N	No	
	None	Control	1984-0	Pipe Chase South of 3217/3231	N	N	N	No	
	None	Control	1984-0	Pipe Chase North of 3213	N	N	N	No	
	None	Control	1984-0	Pipe Chase North of 3223	N	N	N	No	
	3212A	Control	1984-0	Partial Height Electrical Chase (Accessible from 3212)	(Note 0)	(Note 0)	Y	No	
	NAC	Control	1984-0	Area Above Suspended Ceiling	P	P	Y	No	

ATTACHMENT A
PLANT AREAS PROVIDED WITH A FIRE HAZARD ANALYSIS
(Page 5 of 14)

Fire Area	Rm #	Bldg.	Elev.	Description	Auto. Detection	Auto. Suppression	PFSSD Circuits	RCA (Typ.)	FHA Page
C-6	3201	Control	Stair	Control, Stair C-1	N	N	No	Yes	128
	3202	Control	1984-0	Controlled H.P. Tool & Inst. Storage Room	T	T	No	Yes	
	3203	Control	1984-0	Hot Janitors Closet	T	T	No	Yes	
	3204	Control	1984-0	Corridor No. 1	N	T	Yes	Yes	
	3205	Control	1984-0	H.P. Area	T	T	No	Yes	
	3207	Control	1984-0	R.C.A. Ingress	T	T	No	Yes	
	3208	Control	1984-0	R.P. Calibration Lab 1	T	T	Yes	Yes	
	3209	Control	1984-0	Decon Area	T	T	No	Yes	
	3210	Control	1984-0	Decon Shower	N	N	No	Yes	
	3211	Control	1984-0	H.P Conference Room (East)	T	T	Yes	Yes	
	None	Control	1984-0	Pipe Chase North of 3207	N	N	N	Yes	
	None	Control	1984-0	Pipe Chase South of 3207	N	N	N	Yes	
	None	Control	1984-0	Pipe Chase South of 3209	N	N	N	Yes	
	None	Control	1984-0	Pipe Chase North of 3210	N	N	N	Yes	
	None	Control	1984-0	Pipe Chase Behind Hose Cabinet in 3204	N	N	N	Yes	
	3205A	Control	1984-0	Partial Height Electrical Chase (Accessible from 3205)	(Note 0)	(Note 0)	Y	Yes	
	SAC	Control	1984-0	Area Above Suspended Ceiling	P	P	Y	Yes	
C-7	3230	Control	1984-0	Electrical Chase	T	T	Yes	No	132
C-8	3229	Control	1984-0	Electrical Chase	T	T	No	Yes	134
C-9	3301	Control	2000-0	ESF Switchgear Room No. 1	T	T	Yes	No	136
C-10	3302	Control	2000-0	ESF Switchgear Room No. 2	T	T	Yes	No	139
C-11	3305	Control	2000-0	Electrical Chase	T	T	Yes	No	142
C-12	3306	Control	2000-0	Electrical Chase	T	T	Yes	No	144
C-13	3415	Control	2016-0	Access Ctrl & Elec Equip A/C Units No. 1	T	N	Yes	No	146
C-14	3416	Control	2016-0	Access Ctrl & Elec Equip A/C Units No. 2	T	N	Yes	No	149
C-15	3403	Control	2016-0	Non-Vital Swgr & Xfmr Rm No. 1	T	T	Yes	No	152
	3404	Control	2016-0	Switchboard Rm No. 4	T	T	Yes	No	
	3405	Control	2016-0	Battery Rm No. 4	T	N	Yes	No	
	3410	Control	2016-0	Switchboard Rm No. 2	T	T	Yes	No	
	3411	Control	2016-0	Battery Rm No. 2	T	N	Yes	No	
C-16	3407	Control	2016-0	Battery Rm No. 1	T	N	Yes	No	155
	3408	Control	2016-0	Switchboard Rm No. 1	T	T	Yes	No	
	3409	Control	2016-0	Non-Vital Swgr & Xfmr Rm No. 2	T	T	Yes	No	
	3413	Control	2016-0	Battery Rm No. 3	T	N	Yes	No	
	3414	Control	2016-0	Switchboard Rm No. 3	T	T	Yes	No	
C-17	3418	Control	2016-0	Electrical Chase	T	T	Yes	No	159
C-18	3419	Control	2016-0	Electrical Chase	T	T	Yes	No	161
C-19	C19	Control	2016-0	Cable Chase @ CA-C3, 2016-0 to 2032-0	T	T	Yes	No	163
C-20	C20	Control	2016-0	Cable Chase @ CA-C6, 2016-0 to 2032-0	T	T	Yes	No	165
C-21	3501	Control	2032-0	Lower Cable Spreading Room	T	P	Yes	No	167
C-22	3801	Control	2073-6	Upper Cable Spreading Room	T	P	Yes	No	170
C-23	3505	Control	2032-0	Electrical Chase	T	T	Yes	No	173
C-24	3504	Control	2032-0	Electrical Chase	T	T	Yes	No	175
C-25	C25	Control	2032-0	Cable Chase @ CA-C6, 2032-0 to 2047-6	T	T	Yes	No	177
C-26	C26	Control	2032-0	Cable Chase @ CA-C3, 2032-0 to 2047-6,	T	T	Yes	No	179
C-27	3601	Control	2047-6	Control Room	T	N	Yes	No	181

ATTACHMENT A
PLANT AREAS PROVIDED WITH A FIRE HAZARD ANALYSIS
(Page 6 of 14)

Fire Area	Rm #	Bldg.	Elev.	Description	Auto. Detection	Auto. Suppression	PFSSD Circuits	RCA (Typ.)	FHA Page
		RL001	2047-6	Panel Board	T	N	Yes	No	
		RL002	2047-6	Panel Board	T	N	Yes	No	
		RL003	2047-6	Panel Board	T	N	Yes	No	
		RL004	2047-6	Panel Board	T	N	No	No	
		RL005	2047-6	Panel Board	T	N	Yes	No	
		RL006	2047-6	Panel Board	T	N	Yes	No	
		RL011	2047-6	Panel Board	T	N	No	No	
		RL012	2047-6	Panel Board	T	N	No	No	
		RL013	2047-6	Panel Board	T	N	No	No	
		RL014	2047-6	Panel Board	T	N	No	No	
		RL015	2047-6	Panel Board	T	N	Yes	No	
		RL016	2047-6	Panel Board	T	N	Yes	No	
		RL017	2047-6	Panel Board	T	N	Yes	No	
		RL018	2047-6	Panel Board	T	N	Yes	No	
		RL019	2047-6	Panel Board	T	N	Yes	No	
		RL020	2047-6	Panel Board	T	N	Yes	No	
		RL021	2047-6	Panel Board	T	N	Yes	No	
		RL022	2047-6	Panel Board	T	N	Yes	No	
		RL023	2047-6	Panel Board	T	N	Yes	No	
		RL024	2047-6	Panel Board	T	N	Yes	No	
		RL025	2047-6	Panel Board	T	N	Yes	No	
		RL026	2047-6	Panel Board	T	N	No	No	
		RL027	2047-6	Panel Board	T	N	Yes	No	
		RL028	2047-6	Panel Board	T	N	No	No	
	3603	Control	2047-6	Shift Supervisors office	T	N	No	No	
	3604	Control	2047-6	Foyer	N	N	No	No	
	3605	Control	2047-6	Equipment Cabinet Area	P	N	Yes	No	
		RP068	2047-6	Panel Board	T	N	Yes	No	
		NF039A	2047-6	Panel Board	T	N	Yes	No	
		NF039B	2047-6	Panel Board	T	N	Yes	No	
		NF039C	2047-6	Panel Board	T	N	Yes	No	
	3606	Control	2047-6	Emergency Equipment Storage Room	T	N	No	No	
	3616	Control	2047-6	Vestibule	N	N	No	No	
	N/A	Control	2047-6	Duct Chase – Northwest Corner of 3601	N	N	No	No	
	N/A	Control	2047-6	Duct Chase – Southeast Corner of 3604	N	N	No	No	
	N/A	Control	Varies	Cable Trenches and Vertical Shaft	T	T	Yes	No	
C-28	3602	Control	2047-6	Pantry	T	N	Yes	No	186
	3607	Control	2047-6	Toilet	N	N	Yes	No	
	3608	Control	2047-6	Janitors Closet	T	N	Yes	No	
C-29	3609	Control	2047-6	SAS Room	T	N	No	No	188
C-30	3617	Control	2047-6	Electrical Chase	T	T	Yes	No	190
C-31	3618	Control	2047-6	Electrical Chase	T	T	Yes	No	192
C-32	C32	Control	2047-6	Cable Chase @ CA-C6, 2047-6 to 2073-6,	T	T	Yes	No	194
C-33	3804	Control	2073-6	Electrical Chase	T	T	Yes	No	196
C-34	C34	Control	2073-6	Cable Chase @ CA-C6	T	T	Yes	No	198
C-35	3401	Control	2016-0	Corridor No. 1	N (Note 0)	N	Yes	No	200

ATTACHMENT A
PLANT AREAS PROVIDED WITH A FIRE HAZARD ANALYSIS
(Page 7 of 14)

Fire Area	Rm #	Bldg.	Elev.	Description	Auto. Detection	Auto. Suppression	PFSSD Circuits	RCA (Typ.)	FHA Page
	3406	Control	2016-0	Corridor No. 2	N (Note 0)	N	No	No	
	3412	Control	2016-0	Emergency Shower & Eyewash Area	N (Note 0)	N	Yes	No	
C-36	C36	Control	2000-0	Cable Chase @ CA-C6, 2000-0 to 2016-0,	N (Note 0)	T	Yes	No	202
C-37	C37	Control	2000-0	Cable Chase @ CA-C3, 2000-0 to 2016-0	N (Note 0)	T	Yes	No	204
CC-1	3102	Cm Corr.	1974-0	Pipe Space, Tank & Storage Area	P	N	No	No	206
	3103	Cm Corr.	Stair	Stair No. CC-1	T	N	No		
	3225	Cm Corr.	1984-0	Corridor No. 2	P	N	Yes		
	3226	Cm Corr.	1984-0	Counting Room	Above Ceiling - T Below Ceiling - T	N	Yes	Yes	
	3227	Cm Corr.	1984-0	Vestibule No. 3	N	N	Yes	Yes	
	3228	Cm Corr.	1984-0	Hot Laboratory	Above Ceiling - T Below Ceiling - T	N	Yes	Yes	
	N/A	Cm Corr.	1984-0	Pipe Chase – South of 3227 & 3228	N	N	No	No	
	3303	Cm Corr.	2000-0	Corridor	T	N	Yes	No	
	3304	Cm Corr.	2000-0	General Floor Area	N	N	Yes	No	
	3402	Cm Corr.	2016-0	Corridor No. 3	T	N	Yes	No	
	3502	Cm Corr.	2032-0	Lobby	T	N	Yes	No	
	3503	Cm Corr.	2032-0	General Floor Area	P	N	Yes	No	
	3611	Cm Corr.	2047-6	Corridor No. 2	P	N	No	No	
	3612	Cm Corr.	2047-6	Operations Conference Room	T	N	No	No	
	3613	Cm Corr.	2047-6	Work Control Center	T	N	No	No	
	3614	Cm Corr.	2047-6	Corridor No. 3	T	N	Yes	No	
	3619	Cm Corr.	2047-6	General Floor Area	N	N	Yes	No	
	3701	Cm Corr.	2061-6	General Floor Area	P	N	Yes	No	
	3702	Cm Corr.	2061-6	Battery Room	T	N	Yes	No	
	3703	Cm Corr.	2061-6	Radio Equipment Room	T	N	Yes	No	
	3704	Cm Corr.	2061-6	General Floor Area	T	N	Yes	No	
	3705	Cm Corr.	2061-6	Battery Room	T	N	Yes	No	
	3802	Cm Corr.	2078-0	Elevator No. 1 Machine Room	T	N	No	No	
	3803	Cm Corr.	2073-6	Corridor	T	N	Yes	No	
	OP-7	Cm Corr.	2032-0	Observation Post	N	N	No	No	
CST	9101	Other	N/A	Condensate Storage Tank & Pipe House	N	N	Yes	No	271
D-1	5203	D. Gen.	2000-0	Emergency Diesel Generator “A” Room	T	T	Yes	No	209
	5203A	Yard	Buried	Emergency Fuel Oil Tank Area	N	N	Yes	Yes	

ATTACHMENT A
PLANT AREAS PROVIDED WITH A FIRE HAZARD ANALYSIS
(Page 8 of 14)

Fire Area	Rm #	Bldg.	Elev.	Description	Auto. Detection	Auto. Suppression	PFSSD Circuits	RCA (Typ.)	FHA Page
D-2	5201	D. Gen.	2000-0	Emergency Diesel Generator “B” Room	T	T	Yes	No	212
	5201A	Yard	Buried	Emergency Fuel Oil Tank Area	N	N	Yes	Yes	
ESWA	K105	ESW	2000-0	ESW Pump House - Room A	T	N	Yes	No	215
	K105A	ESW	2000-0	Train A ESW Electrical Duct Banks and Vaults	N	N	Yes	No	
ESWB	K104	ESW	2000-0	ESW Pump House - Room B	T	N	Yes	No	218
	K104A	ESW	2000-0	Train B ESW Electrical Duct Banks and Vaults	N	N	Yes	No	
ESWV	AV1, AV2, AV3, AV4, AV5, AV6	Yard	Multiple	ESW Vaults	N	N	No	No	221
F-1	6101	Fuel	Stair	Stair F-1	N	N	No	Yes	223
	6102	Fuel	2000-0	Laydown Area	T	P	No	Yes	
	6103	Fuel	2000-0	Cask Loading Pool	N	N	No	Yes	
	6106	Fuel	2000-0	Spent Fuel Pool & Storage Racks	N	N	No	Yes	
	6201	Fuel	2026-0	Passage	N	N	No	Yes	
	6204	Fuel	2026-0	Cask Washdown Pit	N	N	No	Yes	
	6205	Fuel	2026-0	Fuel Transfer Canal	N	N	No	Yes	
	6210	Fuel	2032-6	New Fuel Storage Area	N	N	No	Yes	
	6301	Fuel	2047-6	General Floor Area	P	N	Yes	Yes	
	6302	Fuel	2047-6	Laydown Area	N	N	No	Yes	
F-2	6104	Fuel	2000-0	Fuel Pool Cooling Heat Exch Room	T	N	Yes	Yes	226
F-3	6105	Fuel	2000-0	Fuel Pool Cooling Heat Exch Room	T	N	No	Yes	228
F-4	6203	Fuel	2026-0	Air Handling Equipment Room	P	N	Yes	Yes	230
F-5	6202	Fuel	2026-0	Electrical Equipment Room	T	N	Yes	Yes	232
F-6	6304	Fuel	2047-6	Exhaust Filter Absorber Room A	T	N	No	Yes	234
F-7	6303	Fuel	2047-6	Exhaust Filter Absorber Room B	T	N	Yes	Yes	236
HMS-1	1332	Hot Machine Shop	2000-0	Hot Machine Shop	T	N	No	Yes	238
	1333	Hot Machine Shop	2000-0	Decontamination Room	T	N	No	Yes	
	1334	Hot Machine Shop	2000-0	Hot Instrument Shop	T	N	No	Yes	

ATTACHMENT A
PLANT AREAS PROVIDED WITH A FIRE HAZARD ANALYSIS
(Page 9 of 14)

Fire Area	Rm #	Bldg.	Elev.	Description	Auto. Detection	Auto. Suppression	PFSSD Circuits	RCA (Typ.)	FHA Page
RB	RB1	Reactor	2000-0	Area Within Secondary Shield Wall	N	N	Yes	Yes	241
	RB2 2201	Reactor	2000-0	Area Outside Secondary Shield Wall	P	N	Yes	Yes	
	RB3	Reactor	2026-0	North Electrical Penetration Area	P	N	Yes	Yes	
	RB4	Reactor	2026-0	South Electrical Penetration Area	P	N	Yes	Yes	
	RB5	Reactor	2047-6	Cable Tray Area	P	N	Yes	Yes	
	RB6 2601 2602	Reactor	2068-8	General Area, Pressurizer Valve Control Room, & Pressurizer Safety Valve Room	N	N	Yes	Yes	
	RB6 2603	Reactor	2068-8	Elevator Machine Room	N	N	No	Yes	
	RB7	Reactor	2026-0	West Area	P	N	Yes	Yes	
	RB8	Reactor	2026-0	East Area	P	N	Yes	Yes	
	RB9 2101	Reactor	1974-0	Tendon Access Gallery	N	N	No	Yes	
	RB10	Reactor	2047-6	El 2047-6, Except Cable Tray Area	N	N	Yes	Yes	
	RB11 2102	Reactor	Multiple	Area Within Primary Shield Wall	N	N	Yes	Yes	

ATTACHMENT A
PLANT AREAS PROVIDED WITH A FIRE HAZARD ANALYSIS
(Page 10 of 14)

Fire Area	Rm #	Bldg.	Elev.	Description	Auto. Detection	Auto. Suppression	PFSSD Circuits	RCA (Typ.)	FHA Page
RW	7101	Radwaste	1976-0	Waste Gas Compressor Room No. 1	N (Note 0)	N	No	Yes	248
	7102	Radwaste	1976-0	Hydrogen Recombiner Room No. 1	N (Note 0)	N	No	Yes	
	7103	Radwaste	1976-0	Valve Room No. 1	T	N	No	Yes	
	7104	Radwaste	1976-0	Recycle Evaporator Feed Pump Room	N	N	No	Yes	
	7105	Radwaste	1976-0	Recycle Hold-Up Tank Room No. 1	N	N	No	Yes	
	7106	Radwaste	1976-0	Waste Gas Compressor Room No. 2	N (Note 0)	N	No	Yes	
	7107	Radwaste	1976-0	Hydrogen Recombiner Room No. 2	N (Note 0)	N	No	Yes	
	7108	Radwaste	1976-0	Valve Room No. 2	T	N	No	Yes	
	7109	Radwaste	1976-0	Corridor No. 1	T	N	No	Yes	
	7110	Radwaste	1976-0	Recycle Hold-Up Tank Room No. 2	N	N	No	Yes	
	7111	Radwaste	1976-0	Waste Gas Decay Tank Room No. 1	N (Note 0)	N	No	Yes	
	7112	Radwaste	1976-0	Valve Room No. 3	N (Note 0)	N	No	Yes	
	7113	Radwaste	1976-0	Load Center and General Area	T	N	Yes	Yes	
	7114	Radwaste	Stair	Radwaste, Stair RW-1	N	N	No	Yes	
	7115	Radwaste	1976-0	Waste Gas Decay Tank Room No. 2	N (Note 0)	N	No	Yes	
	7116	Radwaste	1976-0	Valve Room No. 4	N (Note 0)	N	No	Yes	
	7117	Radwaste	1976-0	Corridor No. 2	T	N	No	Yes	
	7118	Radwaste	1976-0	Steam Gen Blowdown Surge Tank and Pump Room	N	N	No	Yes	
	7119	Radwaste	1976-0	Radioactive Pipe Chase	N	N	No	Yes	
	7120	Radwaste	1976-0	Chemical Drain Tank and Pump Room	N	N	No	Yes	
	7121	Radwaste	1976-0	Waste Evaporator Feed Pump Room	T	N	No	Yes	
	7122	Radwaste	1976-0	Waste Hold-Up Tank Room	N (Note 0)	N	No	Yes	
	7123	Radwaste	1976-0	Waste Evaporator Bottoms Tank Room Primary	N (Note 0)	N	No	Yes	
	7124	Radwaste	1976-0	Waste Evaporator Bottoms Tank Pump Room	T	N	No	Yes	
	7125	Radwaste	1976-0	Floor Drain Tank Pump Room No. 1	T	N	No	Yes	
	7126	Radwaste	1976-0	Floor Drain Tank Room No. 1	N (Note 0)	N	No	Yes	
	7127	Radwaste	1976-0	Waste Monitor Tank and Pump Room	N (Note 0)	N	No	Yes	
	7128	Radwaste	1976-0	Floor Drain Tank Pump Room No. 2	T	N	No	Yes	
	7129	Radwaste	1976-0	Floor Drain Tank Room No. 2	N (Note 0)	N	No	Yes	
	7130	Radwaste	1976-0	Waste Evaporator Condensate Tank and Pump Room	N (Note 0)	N	No	Yes	
	7131	Radwaste	1976-0	Vestibule	N (Note 0)	N	No	Yes	
	7132	Radwaste	Stair	Radwaste, Stair RW-2	N	N	No	Yes	
	7135	Radwaste	1976-0	Gaseous Radwaste Drain Collection Tk & Gas Decay Tk Drain Pump Room	N	N	No	Yes	
	7201	Radwaste	2000-0	Recycle Evapor Room	N (Note 0)	N	No	Yes	
	7202	Radwaste	2000-0	Recycle Evaporator Valve Gallery	N (Note 0)	N	No	Yes	
	7203	Radwaste	2000-0	Corridor No. 1	T	N	No	Yes	
RW	7204	Radwaste	2000-0	Waste Evapor Room	N (Note 0)	N	No	Yes	
	7205	Radwaste	2000-0	Waste Evaporator Valve Gallery	N	N	No	Yes	

ATTACHMENT A
PLANT AREAS PROVIDED WITH A FIRE HAZARD ANALYSIS
(Page 11 of 14)

Fire Area	Rm #	Bldg.	Elev.	Description	Auto. Detection	Auto. Suppression	PFSSD Circuits	RCA (Typ.)	FHA Page
					(Note 0)				
	7206	Radwaste	2000-0	SLWS Evaporator Reagent Tank Room	N (Note 0)	N	No	Yes	
	7207	Radwaste	2000-0	SLWS Pump Room	N (Note 0)	N	No	Yes	
	7208	Radwaste	2000-0	MCC Equipment, Load Center & General Area	T	N	Yes	Yes	
	7209	Radwaste	2000-0	Control Room	T	N	Yes	Yes	
	7210	Radwaste	2000-0	Nuclear Sample Panel Room	N	N	No	Yes	
	7211	Radwaste	2000-0	Sample Lab	N	N	No	Yes	
	7212	Radwaste	2000-0	Spent Resin Stg. Tank Room Primary	N (Note 0)	N	No	Yes	
	7213	Radwaste	2000-0	Corridor No. 3	N (Note 0)	N	No	Yes	
	7214	Radwaste	2000-0	Spent Resin and Evaporator Bottom Tk and Pump Room Secondary	N (Note 0)	N	No	Yes	
	7215	Radwaste	2000-0	Liquid Radwaste Demineralizer Room	N (Note 0)	N	No	Yes	
	7216	Radwaste	2000-0	Corridor No. 2	T	N	No	Yes	
	7217	Radwaste	2000-0	SLWS Monitor Tank Room	N (Note 0)	N	No	Yes	
	7218	Radwaste	2000-0	Solid Radwaste Disposal Station	N (Note 0)	N	No	Yes	
	7219	Radwaste	2000-0	Solidification Control Panel Room	N	N	No	Yes	
	7220	Radwaste	2000-0	Valve Room	N (Note 0)	N	No	Yes	
	7221	Radwaste	2000-0	Emergency Shower and Eyewash Area	T	N	No	Yes	
	7222	Radwaste	2000-0	Misc. Storage Area	T	N	No	Yes	
	7223	Radwaste	2000-0	Vestibule	T	N	No	Yes	
	7224	Radwaste	2000-0	High Level Drum Storage Area	N	N	No	Yes	
	7225	Radwaste	2000-0	Low Level Drum Storage Area	N	N	No	Yes	
	7226	Radwaste	2000-0	Empty Drum Storage / Truck Bay	T	N	No	Yes	
	7227	Radwaste	2000-0	Dewatering Station	N (Note 0)	N	No	Yes	
	7228	Radwaste	2000-0	Drywaste Compactor Area	T	P	No	Yes	
	7229	Radwaste	2000-0	Concentrates Pump Room	N (Note 0)	N	No	Yes	
	7230	Radwaste	2000-0	Instrument Rack Area	N (Note 0)	N	No	Yes	
	7231	Radwaste	2010-6	Subcoolers and Condenser Room	N	N	No	Yes	
	7232	Radwaste	2000-0	Elec Chase	T	N	No	Yes	
	7233	Radwaste	2013-4	Area Over Valve Room	N (Note 0)	N	No	Yes	
	7234	Radwaste	2000-0	Drum Storage Area A	T	N	No	Yes	
	7235	Radwaste	2000-0	Drum Storage Area B	T	N	No	Yes	
	7236	Radwaste	2000-0	Waste Bale Corridor	T	N	No	Yes	
	7301	Radwaste	2022-0	Radioactive Pipe Chase Area	N	N	No	Yes	
	7302	Radwaste	2022-0	HVAC Equip Area	N	N	No	Yes	
	7303	Radwaste	2022-0	Vestibule	N	N	No	Yes	
	7304	Radwaste	2022-0	MCC Equip Area	N	N	No	Yes	
	7305	Radwaste	2022-0	Electrical Chase	T	N	No	Yes	
	7401	Radwaste	2031-6	Filter Compartment Typ of 19	N	N	No	Yes	
RW	7402	Radwaste	2031-6	Valve Room Typ of 19	N	N	No	Yes	
	7403	Radwaste	2031-6	Corridor	T	N	No	Yes	
	7404	Radwaste	2031-6	Valve Room Typ of 12	N	N	No	Yes	

ATTACHMENT A
PLANT AREAS PROVIDED WITH A FIRE HAZARD ANALYSIS
(Page 12 of 14)

Fire Area	Rm #	Bldg.	Elev.	Description	Auto. Detection	Auto. Suppression	PFSSD Circuits	RCA (Typ.)	FHA Page
	7405	Radwaste	2031-6	Demineralizer Compartments, Typ of 12	N	N	No	Yes	
	7406	Radwaste	2031-6	Valve Room	N	N	No	Yes	
	7407	Radwaste	2031-6	Fuel Pool Cleanup Demin Compartment	N (Note 0)	N	No	Yes	
	7408	Radwaste	2031-6	Laundry and Hot Shower Tank Area	N (Note 0)	N	No	Yes	
	7409	Radwaste	2031-6	Acid Tank Area	N (Note 0)	N	No	Yes	
	7410	Radwaste	2031-6	General Fl Area	T	N	No	Yes	
	7411	Radwaste	2031-6	Waste Monitor Tank Area	N (Note 0)	N	No	Yes	
	7413	Radwaste	2031-6	HVAC Platform	N	N	No	Yes	
	7501	Radwaste	2040-6	General Fl Area	N	N	No	Yes	
	7502	Radwaste	2041-6	General Fl Area	N	N	No	Yes	
	7503	Radwaste	2047-6	General Fl Area	N	N	No	Yes	
	7504	Radwaste	2051-6	Platform	N	N	No	Yes	
	None	Radwaste Storage	2000-0	Radwaste Storage Building	N	T	No	Yes	
RW-1	7133	Radwaste Tunnel	1974-0	Elec. Chase Non Radioactive Pipe Tunnel & Personnel Access	T	N	Yes	Yes	251
	7134	Radwaste Tunnel	1974-0	Radioactive Pipe Tunnel	N	N	No	Yes	
RWST	9102	Other	N/A	Refueling Water Storage Tank & Valve House	N	N	Yes	Yes	271
SBO	SBOA	SBO	2000-0	SBO Diesel Generator KU01A	P	N	No	No	254
	SBOB	SBO	2000-0	SBO Diesel Generator KU01B	P	N	No	No	
	SBOC	SBO	2000-0	SBO Diesel Generator KU01C	P	N	No	No	
	SBOD	SBO	1981-5	Manhole EMH175 and Duct Bank	N	N	No	No	
	SBOE	SBO	2000-0	SBO Power Equipment Center	P	N	No	No	
T-1	4101	Turbine	Stair	Turbine, Stair T-1	T	N	Yes	No	254
T-2	4301	Turbine	2000-0	General Fl Area, Col TF-TG, T8-A1	T	P	Yes	No	259
	4302	Turbine	2000-0	Condensate Vacuum Pump Area	T	P	Yes	No	
	4303	Turbine	2000-0	Air Compressor Area	T	P	No	No	
	4304	Turbine	2000-0	Men's Toilet	N	N	No	No	
	4305	Turbine	2000-0	Women's Toilet	N	N	No	No	
	4306	Turbine	2000-0	Janitors Closet	N	N	No	No	
	4322	Turbine	2000-0	Truck Bay & Laydown Area	T	P	Yes	No	
	4351	Turbine	2015-4	General Floor Area	T	T	Yes	No	
	4401	Turbine	2033-0	General Fl Area, Col TA-TG, T8-A1	T	T	Yes	No	
	4501	Turbine	2065-0	General Fl Area, Col TA-TG, T8-A1	N	N	Yes	No	
	4504	Turbine	2065-0	EHC Control Cabinet Room	N	N	Yes	No	
T-4	4308	Turbine	2000-0	Lube Oil Storage Tanks	T	T	No	No	263
T-10	4403	Turbine	2033-0	Lube Oil Reservoir Room	T	T	Yes	No	265

ATTACHMENT A
PLANT AREAS PROVIDED WITH A FIRE HAZARD ANALYSIS
(Page 13 of 14)

Fire Area	Rm #	Bldg.	Elev.	Description	Auto. Detection	Auto. Suppression	PFSSD Circuits	RCA (Typ.)	FHA Page
TURB	4201	Turbine	1983-0	Condenser Pit - General Floor Area	P	P	No	No	267
	4203	Turbine	1983-0	SGFP Turbine Lube Oil Conditioner, Cond Pump	N	P	No	No	
	4204	Turbine	1983-0	Secondary Liquid Waste Collection Tank Pumps	N	T	No	No	
	4205	Turbine	1983-0	High TDS & Low TDS Tank & Pump Area	N	T	No	No	
	4309	Turbine	Stair	Turbine, Stair T-2	N	N	No	No	
	4310	Turbine	Stair	Turbine, Stair T-3	N	N	No	No	
	4312	Turbine	Stair	Turbine, Stair T-5	N	N	No	No	
	4313	Turbine	Stair	Turbine, Stair T-4	N	N	No	No	
	4314	Turbine	Stair	Turbine, Stair T-6	N	N	No	No	
	4316	Turbine	2000-0	Condensate Polishing Area	T	P	Yes	No	
	4317	Turbine	2000-0	Process Sampling Lab	T	N	Yes	No	
	4318	Turbine	2000-0	Turbine Cool Water Heat Exchange Area	T	T	No	No	
	4319	Turbine	2000-0	Condensate Chemical Add Units Area	T	T	No	No	
	4320	Turbine	2000-0	Secondary Liquids Drain Collection Tanks	T	T	No	No	
	4321	Turbine	2000-0	Railroad Bay & Laydown Area	P	T	No	No	
	4323	Turbine	2010-0	Cold Chemistry Lab	T	N	Yes	No	
	4324	Turbine	2000-0	Acid Day Tank Area	T	P	No	No	
	4325	Turbine	2000-0	Caustic Day Tank Area	T	P	No	No	
	4326	Turbine	2000-0	Ph Control & O2 Control Chemical Storage Area	T	T	No	No	
	4402	Turbine	2033-0	Battery Room	T	N	No	No	
	4404	Turbine	2033-0	Battery Room	T	N	Yes	No	
	4405	Turbine	2033-0	Battery Charger Room	T	N	Yes	No	
	4502	Turbine	2065-0	Women's Toilet	N	N	No	No	
	4503	Turbine	2065-0	Men's Toilet	N	N	No	No	
	4505	Turbine	2065-0	Turbine Deck office and Storage Area	N	T	No	No	
	4601	Turbine	2083-0	Elevator Machine Room	N	N	No	No	
	4301E	Turbine	2000-0	General Fl Area, Col TA-TD, T4-T8	T	T	No	No	
	4301W	Turbine	2000-0	General Fl Area, Col TD-TG, T4-T8	T	T	Yes	No	
	4401E	Turbine	2033-0	General Fl Area, Col TA-TD, T1-T8	T	T	No	No	
	4401W	Turbine	2033-0	General Fl Area, Col TD-TG, T1-T8	T	T	Yes	No	
	4501E	Turbine	2065-0	General Fl Area, Col TA-TD, T1-T8	P	P	Yes	No	
	4501W	Turbine	2065-0	General Fl Area, Col TD-TG, T1-T8	N	N	Yes	No	
	OP-1	Turbine	2065-0	Observation Post	N	N	No	No	
	OP-2	Turbine	2000-0	Observation Post	N	N	No	No	
	OP-7	Turbine	2087-0	Observation Post	N	N	No	No	
YARD-ESF	EXFMR	Yard	2000-0	ESF Transformer XNB01	T	T	Yes	No	273
	EXFMR	Yard	2000-0	ESF Transformer XNB02	T	T	Yes	No	
YARD-SU	SXFMR	Yard	2000-0	Startup Transformer XMR01	T	T	Yes	No	275
ESWC	8000	ESWC	2000-0	ESW Vertical Loop Chase	T	N	No	No	243

ATTACHMENT A
PLANT AREAS PROVIDED WITH A FIRE HAZARD ANALYSIS
(Page 14 of 14)

Legend:

T - Total Coverage
P - Partial Coverage
N - No Coverage

Notes:

1. Fire Areas A-29 and A-30 contain no fire detectors. These areas contain low fixed and transient combustibles. Each area consists of three small rooms.
2. Fire Areas A-9 and A-10 consist of one room each, which can be high radiation areas (depending upon plant conditions). The rooms contain low fixed and transient combustibles. Typically, only mechanical equipment and piping are present.
3. Electrical Chase is open to the area above suspended ceiling where smoke detection and sprinkler protection is provided.
4. Fire Area C-35 has no detection. Low fixed combustibles are present.
5. Fire Areas C-36 and C-37 are small electrical chases containing separation group 2 and 3 circuits, respectively. A wet pipe sprinkler system is installed. Transient combustibles are low. Refer to Section 4.3.5 for further discussion regarding cable chase combustible loading.
6. Room is open to an area with detection.
7. A fixed manual water spray system is provided for the steam driven auxiliary feedwater pump lubricating oil lines and bearings.

ATTACHMENT B
FIRE HAZARD ANALYSIS
(Page 1 of 250)

Fire Area A-1 (Reference A-1801)

A.1.1 Fire Area Description

Auxiliary building - El. 1974 1988, general area Rooms 1101, 1102, 1103, 1104, 1105 1106, 1115, 1120, 1121,1122, 1123, 1124, 1125, 1128, 1129 1130, 1201, 1202, 1203, 1204, and 1205.

A.1.2 Major Equipment

Letdown heat exchanger and associated piping, valves and instrumentation, reactor makeup water pumps, normal charging pump, CVCS chiller pumps, moderating heat exchanger, letdown reheat heat exchanger, letdown chiller heat exchanger, chiller surge tank, CVCS chiller unit, auxiliary steam deaerator feed pumps, auxiliary steam condenser recovery and storage tank, auxiliary building sump pumps, auxiliary feedwater pump room sump and sump pumps.

A.1.3 Design Features

This Fire Area is separated from all other Fire Areas by fire barrier construction and penetration closure assemblies (structural steel fireproofing, fire doors, fire dampers, and penetration seals) that satisfy at least one of the following criteria:

- Are directly qualified by 3-hour fire endurance testing in accordance with criteria of the applicable controlling standard (ASTM E-119, ASTM E-152, UL-10B, UL-555, or IEEE-634) for the respective barrier assembly protective feature.
- Have been evaluated as providing an equivalent level of protection.
- Have been evaluated as providing protection commensurate with the fire hazards present.

Table A.1.3-1 identifies fire barrier features within the Fire Area that are unique or not directly bounded by fire endurance testing. These features are evaluated within M 663-00017A or an appropriate document referenced within M 663-00017A. These evaluations determined that each unique or unbounded fire barrier feature will prevent fire propagation from one Fire Area to another, and will not adversely impact PFSSD equipment or circuits within an adjacent Fire Area.

ATTACHMENT B
FIRE HAZARD ANALYSIS
(Page 2 of 250)

Table A.1.3-1
Fire Area A-1, Unique or Unbounded Fire Barrier Features

Unique or Unbounded Feature	M-663-00017A Closure Component Category
North equipment hatch	Hatch
South equipment hatch	Hatch
Hatches for RHR & containment spray valve encapsulation tanks	Hatch
Flanges for encapsulated valve Tanks	Fire Barrier
Personnel hatch from Room 1129 to 1207	Hatch
Dumbwaiter doors and shaft	Fire Door
South personnel elevator doors and shaft	Fire Door
1-hour rated fire wrap protection for redundant PFSSD circuits	Fire Wrap
Penetration seals that exceed the bounding limitations of M-663-00017	Penetration Seal
Structural Steel Fireproofing with unprotected thermal shorts	Structural Steel Fireproofing

The letdown heat exchanger (Room 1125) and the valve compartment (Room 1124) are enclosed by 18-inch-thick (minimum) concrete walls. Openings are located in these walls, near the ceiling, for venting these rooms in the event of a high-energy pipe break. The normal charging pump room (Room 1115) is enclosed by 2-foot-thick concrete walls with a 3-hour-rated fire door and penetration seals. However, Room 1115 is not credited as a separate Fire Area.

A.1.4 Combustible Loading

The cumulative combustible loading classification for Fire Area A-1 is Low.

A.1.5 Fire Protection

An automatic smoke detection system is installed in this area, except as noted in Attachment A. Manual-pull stations are located at exit doors. Detector or pull station activation results in local fire alarm notification appliance operation and annunciation within the Control Room. The Control Room annunciation of a detection or pull station alarm is point addressable for a quick and easy means to identify the location associated with the device in alarm.

Attachment A summarizes the partial automatic suppression coverage provided for this Fire Area. Specifically, an automatic preaction-type sprinkler system is installed over inaccessible cable tray concentrations in Rooms 1101, 1102, 1130, and 1122. The system also provides protection for the north and south hatchways at the ceiling of this area (El. 2000'). Sprinklers are located to minimize obstructions with structural steel.

Hose stations and portable extinguishers are located throughout the area, as delineated on drawing A-1801.

ATTACHMENT B
FIRE HAZARD ANALYSIS
(Page 3 of 250)

Access to this area for manual firefighting is available as follows:

a. Stairwell 4101 from the Turbine Building.

b. Stairwell 1119 at the south end from El. 2000'-0".

c. Stairwell 1127 at the north end from El. 2000'-0".

d. Control Building through Access Control.

One 4-inch drain per 1,000 square feet of floor area is provided throughout this Fire Area. The floor drains are piped to the Auxiliary Building sump, which is emptied by sump pumps. Refer to drawing series M-12LF for further information on the floor and equipment drain system.

A.1.6 Isolation and Smoke Removal

The fire barriers will contain a fire within the Fire Area until extinguished. Fire dampers will isolate HVAC openings in the fire barriers. Refer to Section 4.3.7.2 for smoke removal discussion.

A.1.7 Analysis

A.1.7.1 Fire Suppression

The automatic detection system will provide an early warning of a fire in this area. Hose stations or portable extinguishers can be used to suppress the fire. The automatic sprinkler system installed over the cable trays will actuate to control a fire below and to assist the fire brigade by keeping the environment cool. The sprinkler actuation or a malfunction will be identified by Control Room annunciation. In the event of a failure of the automatic system, the fire can be extinguished manually, using hose stations and/or portable extinguishers. Adequate floor drains are provided to remove the fire suppression system discharge.

A.1.7.2 Safe Shutdown Capability

As applicable, XX-E-013 identifies electrical PFSSD equipment located within the Fire Area, while E-15000 identifies PFSSD circuits. The detailed PFSSD analysis for the Fire Area is provided in E-1F9910. The analysis demonstrates that a success path of PFSSD equipment, unaffected by an A-1 fire, remains available for achieving and maintaining hot standby and ultimately, transition to cold shutdown, if necessary. Additionally, PFSSD manual actions for a fire in this area were evaluated as feasible within E-1F9900. Therefore, a fire within Fire Area A-1 will not prevent safe shutdown of the plant. This, coupled with the defense in depth fire protection features and administrative controls for the Fire Area, provides reasonable assurance that 10 CFR Part 20 radiation limits will not be exceeded due to a fire in A-1.

ATTACHMENT B
FIRE HAZARD ANALYSIS
(Page 4 of 250)

Fire Area A-2 (Reference A-1801)

A.2.1 Fire Area Description

Auxiliary Building safety-related pump area Rooms 1111, 1112, 1113, and 1114.

A.2.2 Major Equipment

Centrifugal charging pump, safety-injection pump, RHR pump, containment spray pump, coolers for the above pump rooms, RHR room sump pumps, valves, and piping auxiliary lube oil pump for the centrifugal charging pump.

A.2.3 Design Features

This Fire Area is separated from all other Fire Areas by fire barrier construction and penetration closure assemblies (structural steel fireproofing, fire doors, fire dampers, and penetration seals) that satisfy at least one of the following criteria:

- Are directly qualified by 3-hour fire endurance testing in accordance with criteria of the applicable controlling standard (ASTM E-119, ASTM E-152, UL-10B, UL-555, or IEEE-634) for the respective barrier assembly protective feature.
- Have been evaluated as providing an equivalent level of protection.
- Have been evaluated as providing protection commensurate with the fire hazards present.

Table A.2.3-1 identifies fire barrier features within the Fire Area that are unique or not directly bounded by fire endurance testing. These features are evaluated within M 663-00017A or an appropriate document referenced within M 663-00017A. These evaluations determined that each unique or unbounded fire barrier feature will prevent fire propagation from one Fire Area to another, and will not adversely impact PFSSD equipment or circuits within an adjacent Fire Area.

Table A.2.3-1
Fire Area A-2, Unique or Unbounded Fire Barrier Features

Unique or Unbounded Feature	M-663-00017A Closure Component Category
Penetration seals that exceed the bounding limitations of M-663-00017	Penetration Seal
Structural Steel Fireproofing with unprotected thermal shorts	Structural Steel Fireproofing

The Centrifugal Charging Pump Room 1114, is separated from the Safety-Injection Pump Room 1113, by a 2-foot-thick concrete wall with a 3 foot 4 inch x 7 foot 2 inch access way.

The RHR Pump Room 1111, is separated from the other rooms by 2-foot-thick concrete walls. A 3-hour fire door is provided for access to this room from Room 1112. However, Room 1111 is not credited as a separate Fire Area.

ATTACHMENT B
FIRE HAZARD ANALYSIS
(Page 5 of 250)

ATTACHMENT B
FIRE HAZARD ANALYSIS
(Page 6 of 250)

A.2.4 Combustible Loading

The cumulative combustible loading classification for Fire Area A-2 is Low.

A.2.5 Fire Protection

Smoke detectors are installed in each room. Manual-pull fire alarm stations are located near the exit doorways for this elevation. Detector or pull station activation results in local fire alarm notification appliance operation and annunciation within the Control Room. The Control Room annunciation of a detection or pull station alarm is point addressable for a quick and easy means to identify the location associated with the device in alarm.

Hose stations and portable extinguishers are located in Rooms 1101 and 1122 (corridors). In addition, portable fire extinguishers are located within the Fire Area, in Rooms 1112 and 1113. Specific fire hose and extinguisher locations are delineated on drawing A-1801.

Access to Room 1112 is from Room 1121 (corridor) through a watertight door. Access to Room 1111 is from Room 1112 through a 3-hour-rated fire door. Access to Rooms 1113 and 1114 is from Room 1101 through a watertight door.

Rooms 1113 and 1114 have two 4-inch floor drains per room. There is one 4-inch floor drain in Rooms 1111 and 1112. A sump with two sump pumps is located in Room 1111. The floor drains are piped to this sump. Refer to drawing series M-12LF for further information on the floor and equipment drain system.

A.2.6 Isolation and Smoke Removal

The fire barriers will contain a fire within the Fire Area until extinguished. Fire dampers will isolate HVAC openings in the fire barriers. Refer to Section 4.3.7.2 for smoke removal discussion.

A.2.7 Analysis

A.2.7.1 Fire Suppression

This area is protected from a fire in adjacent areas by 3-hour barriers. A fire in this area will be detected and alarmed by the automatic detection system. The fire can be extinguished manually, using hose stations and/or portable extinguishers. A fire in this area will be contained by the fire barriers, until extinguished manually. Adequate drainage is provided in each room to drain away the fire-fighting water. The watertight doors will protect the safe shutdown equipment from damage by water discharge from extinguishing systems in the adjacent areas.

ATTACHMENT B
FIRE HAZARD ANALYSIS
(Page 7 of 250)

A.2.7.2 Safe Shutdown Capability

As applicable, XX-E-013 identifies electrical PFSSD equipment located within the Fire Area, while E-15000 identifies PFSSD circuits. The detailed PFSSD analysis for the Fire Area is provided in E-1F9910. The analysis demonstrates that a success path of PFSSD equipment, unaffected by an A-2 fire, remains available for achieving and maintaining hot standby and ultimately, transition to cold shutdown, if necessary. Therefore, a fire within Fire Area A-2 will not prevent safe shutdown of the plant. This, coupled with the defense in depth fire protection features and administrative controls for the Fire Area, provides reasonable assurance that 10 CFR Part 20 radiation limits will not be exceeded due to a fire in A-2.

ATTACHMENT B
FIRE HAZARD ANALYSIS
(Page 8 of 250)

Fire Area A-3 (Reference A-1801 and A-1803)

A.3.1 Fire Area Description

Boric Acid Tank Rooms 1116, 1117, and 1407.

A.3.2 Major Equipment

Boric acid tanks and transfer pumps, unit heaters, boric acid batching tank, boron injection makeup pump, and piping and valves. None are required for safe shutdown following a fire.

A.3.3 Design Features

This Fire Area is separated from all other Fire Areas by fire barrier construction and penetration closure assemblies (structural steel fireproofing, fire doors, fire dampers, and penetration seals) that satisfy at least one of the following criteria:

- Are directly qualified by 3-hour fire endurance testing in accordance with criteria of the applicable controlling standard (ASTM E-119, ASTM E-152, UL-10B, UL-555, or IEEE-634) for the respective barrier assembly protective feature.
- Have been evaluated as providing an equivalent level of protection.
- Have been evaluated as providing protection commensurate with the fire hazards present.

Table A.3.3-1 identifies fire barrier features within the Fire Area that are unique or not directly bounded by fire endurance testing. These features are evaluated within M 663-00017A or an appropriate document referenced within M 663-00017A. These evaluations determined that each unique or unbounded fire barrier feature will prevent fire propagation from one Fire Area to another, and will not adversely impact PFSSD equipment or circuits within an adjacent Fire Area.

Table A.3.3-1
Fire Area A-3, Unique or Unbounded Fire Barrier Features

Unique or Unbounded Feature	M-663-00017A Closure Component Category
Penetration seals that exceed the bounding limitations of M-663-00017	Penetration Seal
Structural Steel Fireproofing with unprotected thermal shorts	Structural Steel Fireproofing

ATTACHMENT B
FIRE HAZARD ANALYSIS
(Page 9 of 250)

The Fire Area extends from Elevation 1974 to the floor slab of Elevation 2047 feet - 6 inches. Room 1116 houses the Separation Group 4 boric acid tank and transfer pump. The corresponding Separation Group 1 equipment is located in Room 1117. Rooms 1116 and 1117 are separated by a 6-foot-high, 12-inch-thick concrete barrier wall with no openings, which acts as a radiant heat shield. The redundant transfer pumps are located approximately 4 feet away from the barrier wall. A 6-foot-wide platform extending from the east to the west fire barrier is located at Elevation 2013. Steps are provided to Elevation 2026 from the platform with an intermediate landing at Elevation 2015 feet - 3 inches. The boric acid batching tank and the boron injection makeup pumps are located on steel grating above Elevation 2026.

A.3.4 Combustible Loading

The cumulative combustible loading classification for Fire Area A-3 is Low.

A.3.5 Fire Protection

A smoke detector is installed under the Elevation 2026 slab in Rooms 1116 and 1117. One infrared flame detector is installed on either side of the 6-foot-high barrier wall to provide early warning of a fire at the floor elevation. Manual-pull stations located at the exit doors on this floor can also provide warning in the event of a fire. Detector or pull station activation results in local fire alarm notification appliance operation and annunciation within the Control Room. The Control Room annunciation of a detection or pull station alarm is point addressable for a quick and easy means to identify the location associated with the device in alarm.

A hose station and one portable extinguisher are located in the corridor (Room 1101), outside Room 1116, and in Room 1122, as delineated on drawing A-1801. For fighting a fire from the platform or at Room 1407, the hose stations in Room 1408 can be used (see A-1803). Additional hose lengths can be added (if required) for manual fire fighting above the boric acid tanks. Access for manual fire fighting at the floor elevation is from Room 1122 for Room 1117 and from Room 1101 for Room 1116. For access to Rooms 1101 and 1122, see Fire Area A-1.

Access to Room 1407 and the platform is from Room 1408. For a description of access to Room 1408, see Fire Area A-16.

A 4-inch floor drain is provided in each room. The floor drains are located 10 feet away from the barrier wall. The floor drains discharge to a sump in the corridor area, which is emptied by sump pumps. Refer to drawing series M-12LF for further information on the floor and equipment drain system.

A.3.6 Isolation and Smoke Removal

A fire in this area will be contained by the fire barriers. The barrier wall will protect one room from a floor fire in the other. Fire dampers will isolate HVAC openings in the fire barriers. Refer to Section 4.3.7.2 for smoke removal discussion.

ATTACHMENT B
FIRE HAZARD ANALYSIS
(Page 10 of 250)

A.3.7 Analysis

A.3.7.1 Fire Suppression

Due to the fire barrier separation, a fire in one of the adjacent areas cannot damage the equipment in this area. A fire in one of the rooms at Elevation 1974 will be detected and alarmed by the flame detectors and/or smoke detectors. The fire can be extinguished manually, using the hose stations and/or the portable extinguishers. A fire in this area will be contained by the fire barriers until extinguished. The combustible loading is low. Since the floor on either side of the barrier slopes to drains in the middle of each room, any transient combustible spill (such as lube oil) will flow away from the barrier wall.

Since there is no equipment requiring maintenance in the vicinity of the platform, introduction of transient combustibles in such quantities as to cause fire damage at this elevation is unlikely. A fire in the cable tray will be detected and alarmed by the smoke detector located in this fire area. The fire can be extinguished from the platform (or the steps leading to the platform) by manual hose stream brought in from Room 1408. A fire in Room 1407 will be detected and alarmed by the detectors in the ceiling. The fire can be extinguished manually by hose stream brought in from Room 1408. The floor drains in Rooms 1116 and 1117 are adequate to drain the fire fighting water. The floor slopes away from the access doors and barrier walls to the floor drains in the corridor in these rooms. Therefore, an extinguishing system discharge in one of the adjacent areas will not damage the equipment within this fire area.

A.3.7.2 Safe Shutdown Capability

As applicable, XX-E-013 identifies electrical PFSSD equipment located within the Fire Area, while E-15000 identifies PFSSD circuits. The detailed PFSSD analysis for the Fire Area is provided in E-1F9910. The analysis demonstrates that a success path of PFSSD equipment, unaffected by an A-3 fire, remains available for achieving and maintaining hot standby and ultimately, transition to cold shutdown, if necessary. Therefore, a fire within Fire Area A-3 will not prevent safe shutdown of the plant. This, coupled with the defense in depth fire protection features and administrative controls for the Fire Area, provides reasonable assurance that 10 CFR Part 20 radiation limits will not be exceeded due to a fire in A-3.

ATTACHMENT B
FIRE HAZARD ANALYSIS
(Page 11 of 250)

Fire Area A-4 (Reference A-1801)

A.4.1 Fire Area Description

Auxiliary building safety-related pump area Rooms 1107, 1108, 1109, and 1110.

A.4.2 Major Equipment

Centrifugal charging pump, safety-injection pump, RHR pump, containment spray pump, coolers for the above pump rooms, RHR room sump pumps, and auxiliary lube oil pump for the centrifugal charging pump.

A.4.3 Design Features

This Fire Area is separated from all other Fire Areas by fire barrier construction and penetration closure assemblies (structural steel fireproofing, fire doors, fire dampers, and penetration seals) that satisfy at least one of the following criteria:

- Are directly qualified by 3-hour fire endurance testing in accordance with criteria of the applicable controlling standard (ASTM E-119, ASTM E-152, UL-10B, UL-555, or IEEE-634) for the respective barrier assembly protective feature.
- Have been evaluated as providing an equivalent level of protection.
- Have been evaluated as providing protection commensurate with the fire hazards present.

Table A.4.3-1 identifies fire barrier features within the Fire Area that are unique or not directly bounded by fire endurance testing. These features are evaluated within M 663-00017A or an appropriate document referenced within M 663-00017A. These evaluations determined that each unique or unbounded fire barrier feature will prevent fire propagation from one Fire Area to another, and will not adversely impact PFSSD equipment or circuits within an adjacent Fire Area.

Table A.4.3-1
Fire Area A-4, Unique or Unbounded Fire Barrier Features

Unique or Unbounded Feature	M-663-00017A Closure Component Category
Penetration seals that exceed the bounding limitations of M-663-00017	Penetration Seal
Structural Steel Fireproofing with unprotected thermal shorts	Structural Steel Fireproofing

The Centrifugal Charging Pump Room, is separated from the Safety-Injection Pump Room 1108, by a 2-foot-thick concrete wall with a 3 foot 4 inch x 7 foot 2 inch access way. The RHR Pump Room 1109, is separated from the other rooms by a 2-foot-thick concrete wall. A 3-hour fire door is provided for access to this room from Room 1110. However, Room 1109 is not credited as a separate Fire Area.

ATTACHMENT B
FIRE HAZARD ANALYSIS
(Page 12 of 250)

A.4.4 Combustible Loading

The cumulative combustible loading classification for Fire Area A-4 is Low.

A.4.5 Fire Protection

Smoke detectors are installed in each room. Manual-pull fire alarm stations are located near the exit doorways for this elevation. Detector or pull station activation results in local fire alarm notification appliance operation and annunciation within the Control Room. The Control Room annunciation of a detection or pull station alarm is point addressable for a quick and easy means to identify the location associated with the device in alarm.

A hose station and a portable extinguisher are located in Room 1101. In addition, portable extinguishers are located within the fire area, in Rooms 1110 and 1108. Hose stations and portable extinguishers are also located in Rooms 1120 and 1121 (corridors). Specific fire hose and extinguisher locations are delineated on drawing A-1801.

Access to Room 1110 is from Room 1121 (corridor) through a watertight door. Access to Room 1109 is from Room 1110 through a 3-hour fire-rated door. Access to Rooms 1107 and 1108 is from Room 1101 through a watertight door.

Rooms 1107 and 1108 have two 4-inch floor drains each. There is one 4-inch floor drain in Rooms 1110 and 1109. A sump with two sump pumps is located in Room 1109. The floor drains are piped to this sump. Refer to drawing series M-12LF for further information on the floor and equipment drain system.

A.4.6 Isolation and Smoke Removal

The fire barriers will contain a fire within the Fire Area until extinguished. Fire dampers will isolate HVAC openings in the fire barriers. Refer to Section 4.3.7.2 for smoke removal discussion.

A.4.7 Analysis

A.4.7.1 Fire Suppression

A fire in this area will be detected and alarmed by the automatic detection system. The fire can be extinguished manually, using hose stations and/or portable extinguishers. A fire in this area will be contained by the fire barriers until extinguished manually. Adequate drainage is provided in each room to remove the fire-fighting water. The watertight doors will protect the safe shutdown equipment from damage by water discharge from extinguishing systems in the adjacent areas.

ATTACHMENT B
FIRE HAZARD ANALYSIS
(Page 13 of 250)

A.4.7.2 Safe Shutdown Capability

As applicable, XX-E-013 identifies electrical PFSSD equipment located within the Fire Area, while E-15000 identifies PFSSD circuits. The detailed PFSSD analysis for the Fire Area is provided in E-1F9910. The analysis demonstrates that a success path of PFSSD equipment, unaffected by an A-4 fire, remains available for achieving and maintaining hot standby and ultimately, transition to cold shutdown, if necessary. Therefore, a fire within Fire Area A-4 will not prevent safe shutdown of the plant. This, coupled with the defense in depth fire protection features and administrative controls for the Fire Area, provides reasonable assurance that 10 CFR Part 20 radiation limits will not be exceeded due to a fire in A-4.

ATTACHMENT B
FIRE HAZARD ANALYSIS
(Page 14 of 250)

Fire Area A-5 (Reference A-1801 thru A-1804)

A.5.1 Fire Area Description

Auxiliary Building Stairway Room 1119, Elevator Shaft, and Elevator Penthouse Room 1601.

A.5.2 Major Equipment

Electric cable and elevator.

A.5.3 Design Features

This Fire Area is separated from all other Fire Areas by fire barrier construction and penetration closure assemblies (structural steel fireproofing, fire doors, fire dampers, and penetration seals) that satisfy at least one of the following criteria:

- Are directly qualified by 3-hour fire endurance testing in accordance with criteria of the applicable controlling standard (ASTM E-119, ASTM E-152, UL-10B, UL-555, or IEEE-634) for the respective barrier assembly protective feature.
- Have been evaluated as providing an equivalent level of protection.
- Have been evaluated as providing protection commensurate with the fire hazards present.

Table A.5.3-1 identifies fire barrier features within the Fire Area that are unique or not directly bounded by fire endurance testing. These features are evaluated within M 663-00017A or an appropriate document referenced within M 663-00017A. These evaluations determined that each unique or unbounded fire barrier feature will prevent fire propagation from one Fire Area to another, and will not adversely impact PFSSD equipment or circuits within an adjacent Fire Area.

Table A.5.3-1
Fire Area A-5, Unique or Unbounded Fire Barrier Features

Unique or Unbounded Feature	M-663-00017A Closure Component Category
South personnel elevator doors and shaft	Fire Door
Penetration seals that exceed the bounding limitations of M-663-00017	Penetration Seal
Structural Steel Fireproofing with unprotected thermal shorts	Structural Steel Fireproofing

Since no Fire Areas are above the ceiling, it is not rated. Roof construction is non-combustible concrete with built up Class A roofing. Therefore, structural integrity will be maintained in the event of a fire.

A.5.4 Combustible Loading

The cumulative combustible loading classification for Fire Area A-5 is Low.

ATTACHMENT B
FIRE HAZARD ANALYSIS
(Page 15 of 250)

A.5.5 Fire Protection

A smoke detector is installed at the ceiling of the stairwell. Smoke detectors are installed at the elevator lobby on each floor. Manual-pull stations are located near the exit doors on each floor. Detector or pull station activation results in local fire alarm notification appliance operation and annunciation within the Control Room. The Control Room annunciation of a detection or pull station alarm is point addressable for a quick and easy means to identify the location associated with the device in alarm.

Hose stations and portable extinguishers are located outside the stairway on each floor.

Access to the Fire Area is achieved from any floor elevation of the stairwell, as depicted on drawings A-1801 thru A-1804.

No drains are provided for this Fire Area, as manual fire water suppression efforts will be minimal, considering the limited combustible loading and equipment in the Fire Area. Additionally, a floor drain is located in Fire Area A-1 just outside the stairwell door at the 1974' elevation. There are no PFSSD equipment or circuits in this area. Therefore, water accumulation in the area would not affect safe shutdown capability.

A.5.6 Isolation and Smoke Removal

A fire in the stairway or elevator will be confined by the fire barriers until extinguished. Refer to Section 4.3.7.2 for smoke removal discussion.

A.5.7 Analysis

A.5.7.1 Fire Suppression

The stairwell and elevator will be protected from a fire in the adjoining areas by the fire-rated barriers. A fire in the stairway will be detected and alarmed by the smoke detector. The fire will be contained by the fire-rated barrier until extinguished manually, using the hose stations and/or portable extinguishers.

A.5.7.2 Safe Shutdown Capability

There are no PFSSD equipment or circuits in this area, therefore fire damage to this area will not prevent safe shutdown. This, coupled with the defense in depth fire protection features and administrative controls for the Fire Area, provides reasonable assurance that 10 CFR Part 20 radiation limits will not be exceeded due to a fire in A-5.

ATTACHMENT B
FIRE HAZARD ANALYSIS
(Page 16 of 250)

Fire Area A-6 (Reference A-1801 thru A-1804)

A.6.1 Fire Area Description

Auxiliary Building Stairway Room 1127

A.6.2 Major Equipment

Electric cable.

A.6.3 Design Features

This Fire Area is separated from all other Fire Areas by fire barrier construction and penetration closure assemblies (structural steel fireproofing, fire doors, fire dampers, and penetration seals) that satisfy at least one of the following criteria:

- Are directly qualified by 3-hour fire endurance testing in accordance with criteria of the applicable controlling standard (ASTM E-119, ASTM E-152, UL-10B, UL-555, or IEEE-634) for the respective barrier assembly protective feature.
- Have been evaluated as providing an equivalent level of protection.
- Have been evaluated as providing protection commensurate with the fire hazards present.

Table A.6.3-1 identifies fire barrier features within the Fire Area that are unique or not directly bounded by fire endurance testing. These features are evaluated within M 663-00017A or an appropriate document referenced within M 663-00017A. These evaluations determined that each unique or unbounded fire barrier feature will prevent fire propagation from one Fire Area to another, and will not adversely impact PFSSD equipment or circuits within an adjacent Fire Area.

Table A.6.3-1
Fire Area A-6, Unique or Unbounded Fire Barrier Features

Unique or Unbounded Feature	M-663-00017A Closure Component Category
3-hour rated fire wrap protection for redundant PFSSD circuits	Fire Wrap
Penetration seals that exceed the bounding limitations of M-663-00017	Penetration Seal
Structural Steel Fireproofing with unprotected thermal shorts	Structural Steel Fireproofing

The ceiling in this area forms part of the roof. Since no fire areas are above the ceiling, it is not rated. Roof construction is non-combustible concrete with built up Class A roofing. Therefore, structural integrity will be maintained in the event of a fire.

A.6.4 Combustible Loading

The cumulative combustible loading classification for Fire Area A-6 is Low.

ATTACHMENT B
FIRE HAZARD ANALYSIS
(Page 17 of 250)

A.6.5 Fire Protection

A smoke detector is installed at the ceiling of the stairway tower. The addressable detector alarms locally and in the Control Room. Manual-pull stations are located near the exit doors on each floor. Detector or pull station activation results in local fire alarm notification appliance operation and annunciation within the Control Room. The Control Room annunciation of a detection or pull station alarm is point addressable for a quick and easy means to identify the location associated with the device in alarm.

Hose stations and portable extinguishers are located outside the stairwell on each floor.

Access to the Fire Area is achieved from any floor elevation of the stairwell, as depicted on drawings A-1801 thru A-1804.

No drains are provided for this Fire Area, as manual fire water suppression efforts will be minimal, considering the limited combustible loading and equipment in the Fire Area. Additionally, a floor drain is located in Fire Area A-1 just outside the stairwell door at the lowest (1974') elevation. There is no PFSSD equipment susceptible to water damage in this area. Therefore, water accumulation in the area would not affect safe shutdown capability.

A.6.6 Isolation and Smoke Removal

A fire in the stairway will be contained by the fire barriers until extinguished. Refer to Section 4.3.7.2 for smoke removal discussion.

A.6.7 Analysis

A.6.7.1 Fire Suppression

The fire barriers will protect the stairwell from a fire in the adjacent areas. A fire in the stairway will be detected and alarmed by the smoke detector. The fire can be extinguished manually, using the hose stations and portable extinguishers located at each floor. A fire within the stairway will be contained by the fire barriers until extinguished.

A.6.7.2 Safe Shutdown Capability

As applicable, XX-E-013 identifies electrical PFSSD equipment located within the Fire Area, while E-15000 identifies PFSSD circuits. The detailed PFSSD analysis for the Fire Area is provided in E-1F9910. The analysis demonstrates that a success path of PFSSD equipment, unaffected by an A-6 fire, remains available for achieving and maintaining hot standby and ultimately, transition to cold shutdown, if necessary. Therefore, a fire within Fire Area A-6 will not prevent safe shutdown of the plant. This, coupled with the defense in depth fire protection features and administrative controls for the Fire Area, provides reasonable assurance that 10 CFR Part 20 radiation limits will not be exceeded due to a fire in A-6.

ATTACHMENT B
FIRE HAZARD ANALYSIS
(Page 18 of 250)

Fire Area A-7 (Reference A-1801)

A.7.1 Fire Area Description

Boron Injection Tank and Pump Room 1126.

A.7.2 Major Equipment

Boron injection tank, boron injection surge tank, boron injection recirculation pumps, piping, and valves.

A.7.3 Design Features

This Fire Area is separated from all other Fire Areas by fire barrier construction and penetration closure assemblies (structural steel fireproofing, fire doors, fire dampers, and penetration seals) that satisfy at least one of the following criteria:

- Are directly qualified by 3-hour fire endurance testing in accordance with criteria of the applicable controlling standard (ASTM E-119, ASTM E-152, UL-10B, UL-555, or IEEE-634) for the respective barrier assembly protective feature.
- Have been evaluated as providing an equivalent level of protection.
- Have been evaluated as providing protection commensurate with the fire hazards present.

Table A.7.3-1 identifies fire barrier features within the Fire Area that are unique or not directly bounded by fire endurance testing. These features are evaluated within M 663-00017A or an appropriate document referenced within M 663-00017A. These evaluations determined that each unique or unbounded fire barrier feature will prevent fire propagation from one Fire Area to another, and will not adversely impact PFSSD equipment or circuits within an adjacent Fire Area.

Table A.7.3-1
Fire Area A-7, Unique or Unbounded Fire Barrier Features

Unique or Unbounded Feature	M-663-00017A Closure Component Category
Structural Steel Fireproofing with unprotected thermal shorts	Structural Steel Fireproofing

A.7.4 Combustible Loading

The cumulative combustible loading classification for Fire Area A-7 is Low.

ATTACHMENT B
FIRE HAZARD ANALYSIS
(Page 19 of 250)

A.7.5 Fire Protection

A smoke detector is installed at the ceiling of this area. A manual-pull station is provided in the corridor adjacent to the watertight door. Detector or pull station activation results in local fire alarm notification appliance operation and annunciation within the Control Room. The Control Room annunciation of a detection or pull station alarm is point addressable for a quick and easy means to identify the location associated with the device in alarm.

A hose station and two portable extinguishers are located in Room 1122 (corridor), adjacent to the access door.

Access to this area is from Room 1122 through a watertight door. For access to Room 1122, see Fire Area A-1.

One 4-inch floor drain with a sealed cover (to prevent back flooding) is located in this area. The drain is piped to the Auxiliary Building floor drain sump; however, it would not be available during a fire. Fire-fighting water would drain from the room through the open door and into the Auxiliary Building sump, which is emptied by sump pumps. Refer to drawing series M-12LF for further information on the floor and equipment drain system.

A.7.6 Isolation and Smoke Removal

The fire barriers will contain a fire within the Fire Area until extinguished. Fire dampers will isolate HVAC openings in the fire barriers. Refer to Section 4.3.7.2 for smoke removal discussion.

A.7.7 Analysis

A.7.7.1 Fire Suppression

The fire barriers protect the components within the area from a fire in the adjacent areas. A fire in this area will be detected and alarmed by the smoke detector. The fire can be extinguished manually, using the hose station and/or portable extinguishers located outside the area. The watertight door will protect the equipment in this area against damage from a fire suppression system discharge in the adjacent area.

A.7.7.2 Safe Shutdown Capability

As applicable, XX-E-013 identifies electrical PFSSD equipment located within the Fire Area, while E-15000 identifies PFSSD circuits. The detailed PFSSD analysis for the Fire Area is provided in E-1F9910. The analysis demonstrates that a success path of PFSSD equipment, unaffected by an A-7 fire, remains available for achieving and maintaining hot standby and ultimately, transition to cold shutdown, if necessary. Therefore, a fire within Fire Area A-7 will not prevent safe shutdown of the plant. This, coupled with the defense in depth fire protection features and administrative controls for the Fire Area, provides reasonable assurance that 10 CFR Part 20 radiation limits will not be exceeded due to a fire in A-7.

ATTACHMENT B
FIRE HAZARD ANALYSIS
(Page 20 of 250)

Fire Area A-8 (Reference A-1802)

A.8.1 Fire Area Description

Auxiliary building - El. 2000, general area Rooms 1301, 1302, 1306, 1307, 1308, 1311, 1312, 1313, 1314, 1315, 1318, 1319, 1320, and 1321.

A.8.2 Major Equipment

Volume control tank and associated piping and valves, containment spray additive tank, reactor coolant filter, seal water return filter, seal water injection filters (2), and boric acid filter, boron thermal regeneration demineralizers (5), cation bed demineralizer and mixed bed demineralizers (2), resin charging tank, ground floor fan coil unit, auxiliary building sampling panel, and load center.

A.8.3 Design Features

This Fire Area is separated from all other Fire Areas by fire barrier construction and penetration closure assemblies (structural steel fireproofing, fire doors, fire dampers, and penetration seals) that satisfy at least one of the following criteria:

- Are directly qualified by 3-hour fire endurance testing in accordance with criteria of the applicable controlling standard (ASTM E-119, ASTM E-152, UL-10B, UL-555, or IEEE-634) for the respective barrier assembly protective feature.
- Have been evaluated as providing an equivalent level of protection.
- Have been evaluated as providing protection commensurate with the fire hazards present.

Table A.8.3-1 identifies fire barrier features within the Fire Area that are unique or not directly bounded by fire endurance testing. These features are evaluated within M 663-00017A or an appropriate document referenced within M 663-00017A. These evaluations determined that each unique or unbounded fire barrier feature will prevent fire propagation from one Fire Area to another, and will not adversely impact PFSSD equipment or circuits within an adjacent Fire Area.

ATTACHMENT B
FIRE HAZARD ANALYSIS
(Page 21 of 250)

Table A.8.3-1
Fire Area A-8, Unique or Unbounded Fire Barrier Features

Unique or Unbounded Feature	M-663-00017A Closure Component Category
North equipment hatches	Hatch
South equipment hatches	Hatch
Resin loading chute cover plate	Hatch
Hatches for RHR & containment spray valve encapsulation tanks	Hatch
Containment post-tensioning hatch covers at “C” Buttress	Hatch
Dumbwaiter doors and shaft	Fire Door
South personnel elevator doors and shaft	Fire Door
Missile door 13331	Fire Door
Missile door 33044	Fire Door
1-hour rated fire wrap protection for redundant PFSSD circuits	Fire Wrap
Penetration seals that exceed the bounding limitations of M-663-00017	Penetration Seal
Structural Steel Fireproofing with unprotected thermal shorts	Structural Steel Fireproofing

The Volume Control Tank Room is separated from adjacent rooms by heavy concrete walls and a fire rated floor and ceiling. The wall separating the VCT from the seal water heat exchanger is fire rated for a minimum of 3 hours. Personnel access to the room is through a labyrinth opening with wire mesh doors.

Access to the Volume Control Tank Room is from Room 1320 through a door in Room 1318 and a labyrinth opening (Refer to A-1802). To promote radiological protection, an additional locked wire mesh door has been provided between Rooms 1313 and 1318. The Volume Control Tank Room 1313 has the tank, piping, and two exposed conduits routed east-west 18 feet above the floor. The adjoining valve compartment, Room 1318, has two motor-operated valves, piping, manual valves, and five exposed conduits. Therefore, the combustible loading in these two rooms is low. Since access from Room 1320 (corridor) is limited to these two rooms, the transient combustibles introduced into these rooms will be those required for maintenance of equipment located in these rooms. Any cutting or welding operation will be administratively controlled. Therefore, the quantity of transient combustibles introduced into these rooms will be low and will not produce enough heat, in the event of a fire, to damage the tank, piping, and valves.

ATTACHMENT B
FIRE HAZARD ANALYSIS
(Page 22 of 250)

A.8.4 Combustible Loading

The cumulative combustible loading classification for Fire Area A-8 is Low.

The new resin for the demineralizers in Room 1319 will be brought in through the south end of the corridor and transported up to El. 2026 by the elevator in the south end. The resin will be in a hydrated form and therefore, does not ignite or sustain combustion easily. The demineralizers will be charged with new resin from the floor above. The demineralizers are ASME pressure vessels filled with water. Spent resin in the demineralizers is sluiced and piped to a spent resin storage tank located in the radwaste building. Consequently, the resin in the demineralizers do not pose a fire hazard.

The spent cartridges in the CVCS filters in Room 1302 will be moved to 55-gallon drums, sealed, and removed from the area. Administrative controls ensure that only new cartridges in quantities required for immediate use will be brought into this area and the containers are removed after they are emptied. The demineralizers and filters are not required for a safe shutdown of the plant.

A.8.5 Fire Protection

An automatic smoke detection system is installed throughout the Fire Area except in several rooms with low combustible loading and no safe shutdown circuits or equipment (See Attachment A and XX-E-013). Manual-pull stations are located at the exit doors of this floor. Detector or pull station activation results in local fire alarm notification appliance operation and annunciation within the Control Room. The Control Room annunciation of a detection or pull station alarm is point addressable for a quick and easy means to identify the location associated with the device in alarm.

An automatic preaction sprinkler system is installed over cable tray concentrations in Rooms 1301, 1314, and 1320 as identified in Attachment A. In the west corridor (Room 1301), additional sprinkler heads are provided below the cable tray elevation between columns A-2 and A-4. These additional sprinkler heads are provided to protect the cable trays from a transient fire located on the floor. This area contains three racks of cable trays and other obstructions, which may reduce the effectiveness of the ceiling-mounted sprinklers in controlling a transient combustible fire. The system also provides protection for the hatchways at the ceiling of this area located at the north and south ends of the building. The hatches at the center of the building are protected as detailed in M-663-00017A. Hose stations and portable extinguishers are located throughout the area, as delineated on drawing A-1802.

Access to this area for manual fire fighting is available as follows:

a. Stairwell 4101 from the Turbine Building.

b. Stairwell 1119 (at the south end) from outside and other buildings.

c. Stairwell 1127 (at the north end) from other elevations of the Auxiliary Building.

d. Doors (at the south end) of Room 1301 from outside.

ATTACHMENT B
FIRE HAZARD ANALYSIS
(Page 23 of 250)

e. Access to Room 1313 (Volume Control Tank Room) is through Room 1318 and Room 1320 (corridor).

f. Access to Room 1317 is from Room 1315 and Room 1316.

One 4-inch drain per 1,000 square feet of floor area is provided throughout this Fire Area. Rooms 1313, 1318, 1311, and 1312 have one 4-inch floor drain per room. The drains are piped to a sump located at El. 1967' accessed from Auxiliary Building floor El. 1974'. Sump pumps empty the sump. Refer to drawing series M-12LF for further information on the floor and equipment drain system.

A.8.6 Isolation and Smoke Removal

The fire barriers will contain a fire within the Fire Area until extinguished. Fire dampers will isolate HVAC openings in the fire barriers. Refer to Section 4.3.7.2 for smoke removal discussion.

A.8.7 Analysis

A.8.7.1 Fire Suppression

The smoke detection system installed throughout the Fire Area except where noted in Attachment A will provide early warning of a fire. Due to low combustible loading, detectors are not installed in the rooms where the CVCS demineralizers, filters, and volume control tank are located. Hose stations and/or portable extinguishers can be used to extinguish a fire in these areas. The preaction sprinkler system installed over the cable tray concentration will actuate to control a fire below and keep the area cool for fire brigade entry. The sprinkler actuation or malfunction will be identified by Control Room annunciation. In the event of a failure of the automatic system, the fire can be extinguished manually using hose stations. Adequate floor drains are provided to remove the fire suppression system discharge. There is no safe shutdown equipment susceptible to water damage in this area.

The volume control tank in Room 1313 is enclosed by concrete walls of adequate thickness to prevent damage from a fire in the adjacent areas. A water inventory is maintained within the tank at all times. The combustible loading in this area is low. Therefore, a fire in this room will not damage the tank.

ATTACHMENT B
FIRE HAZARD ANALYSIS
(Page 24 of 250)

A.8.7.2 Safe Shutdown Capability

As applicable, XX-E-013 identifies electrical PFSSD equipment located within the Fire Area, while E-15000 identifies PFSSD circuits. The detailed PFSSD analysis for the Fire Area is provided in E-1F9910. The analysis demonstrates that a success path of PFSSD equipment, unaffected by an A-8 fire, remains available for achieving and maintaining hot standby and ultimately, transition to cold shutdown, if necessary. Additionally, PFSSD manual actions for a fire in this area were evaluated as feasible within E-1F9900. Therefore, a fire within Fire Area A-8 will not prevent safe shutdown of the plant. This, coupled with the defense in depth fire protection features and administrative controls for the Fire Area, provides reasonable assurance that 10 CFR Part 20 radiation limits will not be exceeded due to a fire in A-8.

ATTACHMENT B
FIRE HAZARD ANALYSIS
(Page 25 of 250)

Fire Area A-9 (Reference A-1802 and A-1803)

A.9.1 Fire Area Description

RHR Heat Exchanger Room 1309.

A.9.2 Major Equipment

RHR heat exchanger (B) and associated piping and valves.

A.9.3 Design Features

This Fire Area is separated from all other Fire Areas by fire barrier construction and penetration closure assemblies (structural steel fireproofing, fire doors, fire dampers, and penetration seals) that satisfy at least one of the following criteria:

- Are directly qualified by 3-hour fire endurance testing in accordance with criteria of the applicable controlling standard (ASTM E-119, ASTM E-152, UL-10B, UL-555, or IEEE-634) for the respective barrier assembly protective feature.
- Have been evaluated as providing an equivalent level of protection.
- Have been evaluated as providing protection commensurate with the fire hazards present.

Table A.9.3-1 identifies fire barrier features within the Fire Area that are unique or not directly bounded by fire endurance testing. These features are evaluated within M 663-00017A or an appropriate document referenced within M 663-00017A. These evaluations determined that each unique or unbounded fire barrier feature will prevent fire propagation from one Fire Area to another, and will not adversely impact PFSSD equipment or circuits within an adjacent Fire Area.

Table A.9.3-1
Fire Area A-9, Unique or Unbounded Fire Barrier Features

Unique or Unbounded Feature	M-663-00017A Closure Component Category
Penetration seals that exceed the bounding limitations of M-663-00017	Penetration Seal
Structural Steel Fireproofing with unprotected thermal shorts	Structural Steel Fireproofing

This Fire area extends through two floor elevations. The ceiling forms the roof of the building and is not required to be fire rated. A hatch with a removable concrete cover is provided in the ceiling for pulling the tube bundle or the heat exchanger. A 1-foot-6-inch-thick, 8-foot-0-inch-high concrete partition wall is located within the Fire Area between the heat exchanger and the valve compartment.

A.9.4 Combustible Loading

The cumulative combustible loading classification for Fire Area A-9 is Low.

ATTACHMENT B
FIRE HAZARD ANALYSIS
(Page 26 of 250)

A.9.5 Fire Protection

Due to the low combustible loading in this area and the separation of redundant equipment by fire barriers, smoke detectors are not installed in this area. In the event of a fire in this area, plant notification can be made by the activation of a manual-pull station in the corridor.

Hose stations are located in Room 1301 outside the Fire Area. Two portable extinguishers are located in Room 1301.

Access to this area is from Room 1301 through a door. For access to Room 1301, see Fire Area A-8.

Two 4-inch floor drains, one on either side of the partition wall, are provided. The drains are piped to a sump located at El. 1967' accessed from Auxiliary Building floor El. 1974'. The sump is emptied by sump pumps. Refer to drawing series M-12LF for further information on the floor and equipment drain system.

A.9.6 Isolation and Smoke Removal

The fire barriers will contain a fire within the Fire Area until extinguished. Fire dampers will isolate HVAC openings in the fire barriers. Refer to Section 4.3.7.2 for smoke removal discussion.

A.9.7 Analysis

A.9.7.1 Fire Suppression

The fire barriers protect the safe shutdown equipment from a fire in adjacent areas. Hose stations or portable extinguishers are available to manually extinguish a fire. A fire in this area will be contained by the fire barriers. Adequate drainage is provided to remove any fire-fighting water. Since the floor in adjoining corridor Room 1301 slopes away from the door to a floor drain, a fire suppression system discharge in the adjacent area cannot damage the equipment in this area.

A.9.7.2 Safe Shutdown Capability

As applicable, XX-E-013 identifies electrical PFSSD equipment located within the Fire Area, while E-15000 identifies PFSSD circuits. The detailed PFSSD analysis for the Fire Area is provided in E-1F9910. The analysis demonstrates that a success path of PFSSD equipment, unaffected by an A-9 fire, remains available for achieving and maintaining hot standby and ultimately, transition to cold shutdown, if necessary. Therefore, a fire within Fire Area A-9 will not prevent safe shutdown of the plant. This, coupled with the defense in depth fire protection features and administrative controls for the Fire Area, provides reasonable assurance that 10 CFR Part 20 radiation limits will not be exceeded due to a fire in A-9.

ATTACHMENT B
FIRE HAZARD ANALYSIS
(Page 27 of 250)

Fire Area A-10 (Reference A-1802 and A-1803)

A.10.1 Fire Area Description

RHR Heat Exchanger Room 1310.

A.10.2 Major Equipment

RHR heat exchanger (A) and associated piping and valves.

A.10.3 Design Features

This Fire Area is separated from all other Fire Areas by fire barrier construction and penetration closure assemblies (structural steel fireproofing, fire doors, fire dampers, and penetration seals) that satisfy at least one of the following criteria:

- Are directly qualified by 3-hour fire endurance testing in accordance with criteria of the applicable controlling standard (ASTM E-119, ASTM E-152, UL-10B, UL-555, or IEEE-634) for the respective barrier assembly protective feature.
- Have been evaluated as providing an equivalent level of protection.
- Have been evaluated as providing protection commensurate with the fire hazards present.

Table A.10.3-1 identifies fire barrier features within the Fire Area that are unique or not directly bounded by fire endurance testing. These features are evaluated within M 663-00017A or an appropriate document referenced within M 663-00017A. These evaluations determined that each unique or unbounded fire barrier feature will prevent fire propagation from one Fire Area to another, and will not adversely impact PFSSD equipment or circuits within an adjacent Fire Area.

Table A.10.3-1
Fire Area A-10, Unique or Unbounded Fire Barrier Features

Unique or Unbounded Feature	M-663-00017A Closure Component Category
Penetration seals that exceed the bounding limitations of M-663-00017	Penetration Seal
Structural Steel Fireproofing with unprotected thermal shorts	Structural Steel Fireproofing

This Fire Area extends through two floor elevations. The ceiling forms the roof of the building and is not required to be fire rated. A hatch with a removable concrete cover is provided in the ceiling for pulling the tube bundle or the heat exchanger. A 1-foot-6-inch-thick, 8-foot-0-inch-high concrete partition wall is located within the Fire Area between the heat exchanger and the valve compartment.

A.10.4 Combustible Loading

The cumulative combustible loading classification for Fire Area A-10 is Low.

ATTACHMENT B
FIRE HAZARD ANALYSIS
(Page 28 of 250)

A.10.5 Fire Protection

Due to low combustible loading and redundant train separation, smoke detectors are not installed in this area. In the event of a fire in this area, plant notification can be made by the activation of a manual-pull station in the corridor.

A hose station is located in Room 1301 outside the Fire Area. Two portable extinguishers are located in Room 1301.

Access to this area is from Room 1301 through a door. For access to Room 1301, see Fire Area A-8.

Two 4-inch floor drains, one on either side of the partition wall, are provided. The drains are piped to a sump located at El. 1967' accessed from Auxiliary Building floor El. 1974'. The sump is emptied by sump pumps. Refer to drawing series M-12LF for further information on the floor and equipment drain system.

A.10.6 Isolation and Smoke Removal

The fire barriers will contain a fire within the Fire Area until extinguished. Fire dampers will isolate HVAC openings in the fire barriers. Refer to Section 4.3.7.2 for smoke removal discussion.

A.10.7 Analysis

A.10.7.1 Fire Suppression

The fire barriers protect the safe shutdown equipment from a fire in adjacent areas. Hose stations or portable extinguishers can be used to manually suppress a fire. The fire will be contained by the fire barriers. Adequate drainage is provided to remove the fire-fighting water. Since the floor in the adjoining corridor Room 1301 slopes away from the door to a floor drain, a fire suppression system discharge in the adjacent area cannot damage the equipment in this area.

A.10.7.2 Safe Shutdown Capability

As applicable, XX-E-013 identifies electrical PFSSD equipment located within the Fire Area, while E-15000 identifies PFSSD circuits. The detailed PFSSD analysis for the Fire Area is provided in E-1F9910. The analysis demonstrates that a success path of PFSSD equipment, unaffected by an A-10 fire, remains available for achieving and maintaining hot standby and ultimately, transition to cold shutdown, if necessary. Therefore, a fire within Fire Area A-10 will not prevent safe shutdown of the plant. This, coupled with the defense in depth fire protection features and administrative controls for the Fire Area, provides reasonable assurance that 10 CFR Part 20 radiation limits will not be exceeded due to a fire in A-10.

ATTACHMENT B
FIRE HAZARD ANALYSIS
(Page 29 of 250)

Fire Area A-11 (Reference A-1802)

A.11.1 Fire Area Description

Cable Chase Room 1335, Auxiliary Building - El. 2000 to 2026.

A.11.2 Major Equipment

Electric cable only.

A.11.3 Design Features

This Fire Area is separated from all other Fire Areas by fire barrier construction and penetration closure assemblies (structural steel fireproofing, fire doors, fire dampers, and penetration seals) that satisfy at least one of the following criteria:

- Are directly qualified by 3-hour fire endurance testing in accordance with criteria of the applicable controlling standard (ASTM E-119, ASTM E-152, UL-10B, UL-555, or IEEE-634) for the respective barrier assembly protective feature.
- Have been evaluated as providing an equivalent level of protection.
- Have been evaluated as providing protection commensurate with the fire hazards present.

Table A.11.3-1 identifies fire barrier features within the Fire Area that are unique or not directly bounded by fire endurance testing. These features are evaluated within M 663-00017A or an appropriate document referenced within M 663-00017A. These evaluations determined that each unique or unbounded fire barrier feature will prevent fire propagation from one Fire Area to another, and will not adversely impact PFSSD equipment or circuits within an adjacent Fire Area.

Table A.11.3-1
Fire Area A-11, Unique or Unbounded Fire Barrier Features

Unique or Unbounded Feature	M-663-00017A Closure Component Category
Structural Steel Fireproofing with unprotected thermal shorts	Structural Steel Fireproofing

A.11.4 Combustible Loading

The cumulative combustible loading classification for Fire Area A-11 is High. Refer to Section 4.3.5 for further discussion regarding cable chase combustible loading.

ATTACHMENT B
FIRE HAZARD ANALYSIS
(Page 30 of 250)

A.11.5 Fire Protection

Automatic smoke detection is provided in this area. Manual-pull fire alarm stations are located at normal exits from this floor area. Detector or pull station activation results in local fire alarm notification appliance operation and annunciation within the Control Room. The Control Room annunciation of a detection or pull station alarm is point addressable for a quick and easy means to identify the location associated with the device in alarm.

An automatic wet pipe sprinkler system, is installed in this area. The system is equipped with closed head spray nozzles. Backup to the automatic sprinkler system is by portable extinguishers and manual hose stations located in Room 1320 (Fire Area A-8).

Access to the chase is through a 3 foot 6 inch by 4 foot 0 inch, 3-hour-rated fire door. The access door is within 25 feet of the hose station.

Drainage in this area is by one 4-inch floor drain. This is more than adequate to handle maximum sprinkler system discharge and hose station discharge. The drain discharges to the 1974' elevation and ultimately to the Auxiliary Building sump, which is emptied by sump pumps. Refer to drawing series M-12LF for further information on the floor and equipment drain system.

A.11.6 Isolation and Smoke Removal

The fire barriers will contain a fire within the Fire Area until extinguished. No ventilation ductwork penetrates the fire barriers in this Fire Area. Refer to Section 4.3.7.2 for smoke removal discussion.

A.11.7 Analysis

A.11.7.1 Fire Suppression

A fire in this area will be detected and alarmed by the automatic detection system. In the event that a fire develops, it will be contained by the fire barriers and extinguished by the automatic suppression system. Should the automatic suppression system fail, hose streams can be directed through the access opening to extinguish the fire.

ATTACHMENT B
FIRE HAZARD ANALYSIS
(Page 31 of 250)

A.11.7.2 Safe Shutdown Capability

As applicable, XX-E-013 identifies electrical PFSSD equipment located within the Fire Area, while E-15000 identifies PFSSD circuits. The detailed PFSSD analysis for the Fire Area is provided in E-1F9910. The analysis demonstrates that a success path of PFSSD equipment, unaffected by an A-11 fire, remains available for achieving and maintaining hot standby and ultimately, transition to cold shutdown, if necessary. Additionally, PFSSD manual actions for a fire in this area were evaluated as feasible within E-1F9900. Therefore, a fire within Fire Area A-11 will not prevent safe shutdown of the plant. This, coupled with the defense in depth fire protection features and administrative controls for the Fire Area, provides reasonable assurance that 10 CFR Part 20 radiation limits will not be exceeded due to a fire in A-11.

ATTACHMENT B
FIRE HAZARD ANALYSIS
(Page 32 of 250)

Fire Area A-12 (Reference A-1802)

A.12.1 Fire Area Description

Cable Chase Room 1336, Auxiliary Building - El. 2000 to 2026.

A.12.2 Major Equipment

Electric cable only

A.12.3 Design Features

This Fire Area is separated from all other Fire Areas by fire barrier construction and penetration closure assemblies (structural steel fireproofing, fire doors, fire dampers, and penetration seals) that satisfy at least one of the following criteria:

- Are directly qualified by 3-hour fire endurance testing in accordance with criteria of the applicable controlling standard (ASTM E-119, ASTM E-152, UL-10B, UL-555, or IEEE-634) for the respective barrier assembly protective feature.
- Have been evaluated as providing an equivalent level of protection.
- Have been evaluated as providing protection commensurate with the fire hazards present.

Table A.12.3-1 identifies fire barrier features within the Fire Area that are unique or not directly bounded by fire endurance testing. These features are evaluated within M 663-00017A or an appropriate document referenced within M 663-00017A. These evaluations determined that each unique or unbounded fire barrier feature will prevent fire propagation from one Fire Area to another, and will not adversely impact PFSSD equipment or circuits within an adjacent Fire Area.

Table A.12.3-1
Fire Area A-12, Unique or Unbounded Fire Barrier Features

Unique or Unbounded Feature	M-663-00017A Closure Component Category
Structural Steel Fireproofing with unprotected thermal shorts	Structural Steel Fireproofing

A.12.4 Combustible Loading

The cumulative combustible loading classification for Fire Area A-12 is High. Refer to Section 4.3.5 for further discussion regarding cable chase combustible loading.

ATTACHMENT B
FIRE HAZARD ANALYSIS
(Page 33 of 250)

A.12.5 Fire Protection

Automatic smoke detection is provided in this area. Manual-pull fire alarm stations are located at normal exits from this floor area. Detector or pull station activation results in local fire alarm notification appliance operation and annunciation within the Control Room. The Control Room annunciation of a detection or pull station alarm is point addressable for a quick and easy means to identify the location associated with the device in alarm.

An automatic wet pipe sprinkler system, is installed in this area. The system is equipped with closed head spray nozzles. Backup to the automatic sprinkler system is by portable extinguishers and manual hose stations located in Room 1314 (Fire Area A-8).

Access to the chase is through a 3 foot 6 inch by 4 foot, 3-hour-rated door. The access door is within 30 feet of the hose station.

Drainage in this area is by one 4-inch floor drain. This is more than adequate to handle maximum sprinkler system discharge or hose station discharge. The drain discharges to the 1974' elevation and ultimately to the Auxiliary Building sump, which is emptied by sump pumps. Refer to drawing series M-12LF for further information on the floor and equipment drain system.

A.12.6 Isolation and Smoke Removal

The fire barriers will contain a fire within the Fire Area until extinguished. No ventilation ductwork penetrates the fire barriers in this Fire Area. Refer to Section 4.3.7.2 for smoke removal discussion.

A.12.7 Analysis

A.12.7.1 Fire Suppression

A fire in this area will be detected and alarmed by the automatic detection system. In the event that a fire develops, it will be contained by the fire barriers until extinguished by the automatic suppression system. Should the automatic suppression system fail, manual hose streams can be directed through the access opening to extinguish the fire.

A.12.7.2 Safe Shutdown Capability

As applicable, XX-E-013 identifies electrical PFSSD equipment located within the Fire Area, while E-15000 identifies PFSSD circuits. The detailed PFSSD analysis for the Fire Area is provided in E-1F9910. The analysis demonstrates that a success path of PFSSD equipment, unaffected by an A-12 fire, remains available for achieving and maintaining hot standby and ultimately, transition to cold shutdown, if necessary. Therefore, a fire within Fire Area A-12 will not prevent safe shutdown of the plant. This, coupled with the defense in depth fire protection features and administrative controls for the Fire Area, provides reasonable assurance that 10 CFR Part 20 radiation limits will not be exceeded due to a fire in A-12.

ATTACHMENT B
FIRE HAZARD ANALYSIS
(Page 34 of 250)

Fire Area A-13 (Reference A-1802)

A.13.1 Fire Area Description

Auxiliary Feedwater Pump Room 1325.

A.13.2 Major Equipment

Motor-driven auxiliary feedwater pump B and pump room cooler.

A.13.3 Design Features

This Fire Area is separated from all other Fire Areas by fire barrier construction and penetration closure assemblies (structural steel fireproofing, fire doors, fire dampers, and penetration seals) that satisfy at least one of the following criteria:

- Are directly qualified by 3-hour fire endurance testing in accordance with criteria of the applicable controlling standard (ASTM E-119, ASTM E-152, UL-10B, UL-555, or IEEE-634) for the respective barrier assembly protective feature.
- Have been evaluated as providing an equivalent level of protection.
- Have been evaluated as providing protection commensurate with the fire hazards present.

Table A.13.3-1 identifies fire barrier features within the Fire Area that are unique or not directly bounded by fire endurance testing. These features are evaluated within M 663-00017A or an appropriate document referenced within M 663-00017A. These evaluations determined that each unique or unbounded fire barrier feature will prevent fire propagation from one Fire Area to another, and will not adversely impact PFSSD equipment or circuits within an adjacent Fire Area.

Table A.13.3-1
Fire Area A-13, Unique or Unbounded Fire Barrier Features

Unique or Unbounded Feature	M-663-00017A Closure Component Category
Penetration seals that exceed the bounding limitations of M-663-00017	Penetration Seal
Structural Steel Fireproofing with unprotected thermal shorts	Structural Steel Fireproofing

Watertight doors with 6-inch-high curb are located in the south and east fire barrier walls.

A.13.4 Combustible Loading

The cumulative combustible loading classification for Fire Area A-13 is Low.

ATTACHMENT B
FIRE HAZARD ANALYSIS
(Page 35 of 250)

A.13.5 Fire Protection

Automatic smoke detection is provided in this area. Manual-pull fire alarm stations are located at normal exits from the Turbine Building. Detector or pull station activation results in local fire alarm notification appliance operation and annunciation within the Control Room. The Control Room annunciation of a detection or pull station alarm is point addressable for a quick and easy means to identify the location associated with the device in alarm.

A hose station and two portable extinguishers are located in the corridor (Room 1329) outside this fire area. All areas are within reach of this hose station.

Access for manual firefighting is through a watertight door from Room 1329. Access to Room 1329 is from the Turbine Building.

Two 4-inch floor drains are provided in this area. The floor drain is piped to the Auxiliary Feedwater Room sump located in Room 1128 (El. 1974). The sump is emptied by sump pumps. Refer to drawing series M-12LE for further information on the oily waste drain system.

A.13.6 Isolation and Smoke Removal

The fire barriers will contain a fire within the Fire Area until extinguished. Fire dampers will isolate HVAC openings in the fire barriers. Refer to Section 4.3.7.2 for smoke removal discussion.

A.13.7 Analysis

A.13.7.1 Fire Suppression

This area is protected from a fire in the adjacent areas by fire barriers. A fire in the area will be detected and alarmed by the automatic detection system. The fire can be extinguished manually, using the hose station and/or the portable extinguishers located in the adjoining corridor (Room 1329). A fire will be contained by the fire barriers until extinguished. Adequate drainage is provided to drain the fire-fighting water. The watertight doors will protect the safe shutdown equipment from damage by water discharged by extinguishing systems in the adjacent areas.

A.13.7.2 Safe Shutdown Capability

As applicable, XX-E-013 identifies electrical PFSSD equipment located within the Fire Area, while E-15000 identifies PFSSD circuits. The detailed PFSSD analysis for the Fire Area is provided in E-1F9910. The analysis demonstrates that a success path of PFSSD equipment, unaffected by an A-13 fire, remains available for achieving and maintaining hot standby and ultimately, transition to cold shutdown, if necessary. Additionally, PFSSD manual actions for a fire in this area were evaluated as feasible within E-1F9900. Therefore, a fire within Fire Area A-13 will not prevent safe shutdown of the plant.

ATTACHMENT B
FIRE HAZARD ANALYSIS
(Page 36 of 250)

Fire Area A-14 (Reference A-1802)

A.14.1 Fire Area Description

Auxiliary Feedwater Pump Room 1326.

A.14.2 Major Equipment

Motor-driven auxiliary feedwater pump A and pump room cooler.

A.14.3 Design Features

This Fire Area is separated from all other Fire Areas by fire barrier construction and penetration closure assemblies (structural steel fireproofing, fire doors, fire dampers, and penetration seals) that satisfy at least one of the following criteria:

- Are directly qualified by 3-hour fire endurance testing in accordance with criteria of the applicable controlling standard (ASTM E-119, ASTM E-152, UL-10B, UL-555, or IEEE-634) for the respective barrier assembly protective feature.
- Have been evaluated as providing an equivalent level of protection.
- Have been evaluated as providing protection commensurate with the fire hazards present.

Table A.14.3-1 identifies fire barrier features within the Fire Area that are unique or not directly bounded by fire endurance testing. These features are evaluated within M 663-00017A or an appropriate document referenced within M 663-00017A. These evaluations determined that each unique or unbounded fire barrier feature will prevent fire propagation from one Fire Area to another, and will not adversely impact PFSSD equipment or circuits within an adjacent Fire Area.

Table A.14.3-1
Fire Area A-14, Unique or Unbounded Fire Barrier Features

Unique or Unbounded Feature	M-663-00017A Closure Component Category
Penetration seals that exceed the bounding limitations of M-663-00017	Penetration Seal
Structural Steel Fireproofing with unprotected thermal shorts	Structural Steel Fireproofing

A watertight door with 6-inch-high curb is located in the east fire barrier walls.

A.14.4 Combustible Loading

The cumulative combustible loading classification for Fire Area A-14 is Low.

ATTACHMENT B
FIRE HAZARD ANALYSIS
(Page 37 of 250)

A.14.5 Fire Protection

Automatic smoke detection is provided in this area. Manual-pull fire alarm stations are located at normal exits from the Turbine Building. Detector or pull station activation results in local fire alarm notification appliance operation and annunciation within the Control Room. The Control Room annunciation of a detection or pull station alarm is point addressable for a quick and easy means to identify the location associated with the device in alarm.

A hose station and two portable extinguishers are located in the corridor (Room 1329) outside this fire area. All areas are within reach of this hose station.

Access for manual fire fighting is through a watertight door from Room 1329. Access to Room 1329 is from the Turbine Building.

Two 4-inch floor drains are provided in this area. The floor drain is piped to the Auxiliary Feedwater Room sump located in Room 1128 (Elevation 1974). The sump is emptied by sump pumps. Refer to drawing series M-12LE for further information on the oily waste drain system.

A.14.6 Isolation and Smoke Removal

The fire barriers will contain a fire within the Fire Area until extinguished. Fire dampers will isolate HVAC openings in the fire barriers. Refer to Section 4.3.7.2 for smoke removal discussion.

A.14.7 Analysis

A.14.7.1 Fire Suppression

This area is protected from a fire in the adjacent areas by fire barriers. A fire in the area will be detected and alarmed by the automatic detection system. The fire can be extinguished manually, using the hose station and/or the portable extinguishers located in the adjoining corridor (Room 1329). A fire will be contained by the fire barriers. Adequate drainage is provided to drain all fire-fighting water. The watertight doors will protect the safe shutdown equipment from damage by water discharge from extinguishing systems in the adjacent areas.

A.14.7.2 Safe Shutdown Capability

As applicable, XX-E-013 identifies electrical PFSSD equipment located within the Fire Area, while E-15000 identifies PFSSD circuits. The detailed PFSSD analysis for the Fire Area is provided in E-1F9910. The analysis demonstrates that a success path of PFSSD equipment, unaffected by an A-14 fire, remains available for achieving and maintaining hot standby and ultimately, transition to cold shutdown, if necessary. Additionally, PFSSD manual actions for a fire in this area were evaluated as feasible within E-1F9900. Therefore, a fire within Fire Area A-14 will not prevent safe shutdown of the plant.

ATTACHMENT B
FIRE HAZARD ANALYSIS
(Page 38 of 250)

Fire Area A-15 (Reference A-1802)

A.15.1 Fire Area Description

Auxiliary Feedwater Pump Room 1331.

A.15.2 Major Equipment

Turbine-driven auxiliary feedwater pump.

A.15.3 Design Features

This Fire Area is separated from all other Fire Areas by fire barrier construction and penetration closure assemblies (structural steel fireproofing, fire doors, fire dampers, and penetration seals) that satisfy at least one of the following criteria:

- Are directly qualified by 3-hour fire endurance testing in accordance with criteria of the applicable controlling standard (ASTM E-119, ASTM E-152, UL-10B, UL-555, or IEEE-634) for the respective barrier assembly protective feature.
- Have been evaluated as providing an equivalent level of protection.
- Have been evaluated as providing protection commensurate with the fire hazards present.

Table A.15.3-1 identifies fire barrier features within the Fire Area that are unique or not directly bounded by fire endurance testing. These features are evaluated within M 663-00017A or an appropriate document referenced within M 663-00017A. These evaluations determined that each unique or unbounded fire barrier feature will prevent fire propagation from one Fire Area to another, and will not adversely impact PFSSD equipment or circuits within an adjacent Fire Area.

Table A.15.3-1
Fire Area A-15, Unique or Unbounded Fire Barrier Features

Unique or Unbounded Feature	M-663-00017A Closure Component Category
Blowout panel	Hatch
Penetration seals that exceed the bounding limitations of M-663-00017	Penetration Seal
Structural Steel Fireproofing with unprotected thermal shorts	Structural Steel Fireproofing

A watertight, missile-protection door with 6-inch- high curb is located in the west fire barrier wall.

A.15.4 Combustible Loading

The cumulative combustible loading classification for Fire Area A-15 is Low.

ATTACHMENT B
FIRE HAZARD ANALYSIS
(Page 39 of 250)

A.15.5 Fire Protection

Automatic smoke detection is provided in this area. Rate-compensated thermal detectors are also installed in this area. Manual-pull fire alarm stations are located at normal exits from the Turbine Building. Detector or pull station activation results in local fire alarm notification appliance operation and annunciation within the Control Room. The Control Room annunciation of a detection or pull station alarm is point addressable for a quick and easy means to identify the location associated with the device in alarm.

A hose station and two portable extinguishers are located in the corridor (Room 1329) outside this Fire Area. All areas are within reach of this hose station. In addition to the above, a manually charged fixed water spray system is installed to protect the turbine and pump lubricating oil lines and bearings. A manual system precludes any water damage to the turbine due to inadvertent actuation. The manual valve to activate the system is located outside the Fire Area in Room 1329 and is electrically supervised.

Access for manual fire fighting is through a watertight door from Room 1329. Access to Room 1329 is from the Turbine Building.

Two 4-inch floor drains are provided in this area. The floor drain is piped to the Auxiliary Feedwater Room sump located in Room 1128 (El. 1974). The sump is emptied by sump pumps. Refer to drawing series M-12LE for further information on the oily waste drain system.

A.15.6 Isolation and Smoke Removal

The fire barriers will contain a fire within the Fire Area until extinguished. Fire dampers will isolate HVAC openings in the fire barriers. Refer to Section 4.3.7.2 for smoke removal discussion.

A.15.7 Analysis

A.15.7.1 Fire Suppression

This area is protected from a fire in the adjacent areas by fire barriers. A fire in the area will be detected and alarmed by the automatic detection system. The manual spray system can be actuated to extinguish the fire. In case of a malfunction of the spray system, the hose station and/or the portable extinguishers located in the adjoining corridor (Room 1329) will provide adequate backup for fire suppression. A fire will be contained by the fire barriers. Adequate drainage is provided to drain the fire-fighting water. The watertight doors will protect the safe shutdown equipment from damage by water discharged by extinguishing systems in the adjacent areas.

ATTACHMENT B
FIRE HAZARD ANALYSIS
(Page 40 of 250)

A.15.7.2 Safe Shutdown Capability

As applicable, XX-E-013 identifies electrical PFSSD equipment located within the Fire Area, while E-15000 identifies PFSSD circuits. The detailed PFSSD analysis for the Fire Area is provided in E-1F9910. The analysis demonstrates that a success path of PFSSD equipment, unaffected by an A-15 fire, remains available for achieving and maintaining hot standby and ultimately, transition to cold shutdown, if necessary. Additionally, PFSSD manual actions for a fire in this area were evaluated as feasible within E-1F9900. Therefore, a fire within Fire Area A-15 will not prevent safe shutdown of the plant.

ATTACHMENT B
FIRE HAZARD ANALYSIS
(Page 41 of 250)

Fire Area A-16 (Reference A-1803)

A.16.1 Fire Area Description

Auxiliary Building El. 2026, general area Rooms 1401, 1402, 1406, and 1408.

A.16.2 Major Equipment

CCW heat exchangers, pumps, pump room coolers, piping, and valves.

A.16.3 Design Features

This Fire Area is separated from all other Fire Areas by fire barrier construction and penetration closure assemblies (structural steel fireproofing, fire doors, fire dampers, and penetration seals) that satisfy at least one of the following criteria:

- Are directly qualified by 3-hour fire endurance testing in accordance with criteria of the applicable controlling standard (ASTM E-119, ASTM E-152, UL-10B, UL-555, or IEEE-634) for the respective barrier assembly protective feature.
- Have been evaluated as providing an equivalent level of protection.
- Have been evaluated as providing protection commensurate with the fire hazards present.

Table A.16.3-1 identifies fire barrier features within the Fire Area that are unique or not directly bounded by fire endurance testing. These features are evaluated within M 663-00017A or an appropriate document referenced within M 663-00017A. These evaluations determined that each unique or unbounded fire barrier feature will prevent fire propagation from one Fire Area to another, and will not adversely impact PFSSD equipment or circuits within an adjacent Fire Area.

Table A.16.3-1
Fire Area A-16, Unique or Unbounded Fire Barrier Features

Unique or Unbounded Feature	M-663-00017A Closure Component Category
North equipment hatches	Hatch
South equipment hatches	Hatch
Containment post-tensioning hatch covers at “C” Buttress	Hatch
South personnel elevator doors and shaft	Fire Door
Missile door 41015	Fire Door
Cable tray firestops and cable tray covers within Combustible Control Zone	Cable Tray Firestops & Cable Tray Covers
Penetration seals that exceed the bounding limitations of M-663-00017	Penetration Seal
Structural Steel Fireproofing with unprotected thermal shorts	Structural Steel Fireproofing

Six-inch high curbs are installed around Rooms 1401 and 1406 containing the redundant CCW system equipment. These rooms are separated horizontally by 75 feet (minimum). The fire barrier enclosure around Fire Areas A-9 and A-10 is located between these two rooms.

A.16.4 Combustible Loading

The cumulative combustible loading classification for Fire Area A-16 is Low.

A 20 ft. Combustible Control Zone separation area is administratively maintained to strictly control transient combustibles in the limiting separation area between redundant PFSSD circuits within the east corridor of 1408. Specifically, the Combustible Control Zone is located between columns A7 and A8 from the Containment wall to the east wall of RHR Heat Exchanger Room 1309. Insitu combustibles within the Combustible Control Zone do not pose a fire propagation path that would disable both trains of redundant PFSSD equipment.

A.16.5 Fire Protection

Automatic smoke detection is provided in this area. Manual-pull stations are located at exit doors of this floor. Detector or pull station activation results in local fire alarm notification appliance operation and annunciation within the Control Room. The Control Room annunciation of a detection or pull station alarm is point addressable for a quick and easy means to identify the location associated with the device in alarm.

An automatic preaction-type sprinkler system is installed over cable tray concentrations in Rooms 1402 and 1408 as detailed in Attachment A. The system also provides protection for the hatchways at the ceiling of this area.

In the east corridor (Room 1408), additional sprinkler heads are provided below the cable tray elevation between columns A-1 and A-4. These additional sprinkler heads are provided to protect the cable trays from a transient fire located on this floor. This area contains cable trays and other obstructions, which may reduce the effectiveness of the ceiling-mounted sprinklers in controlling a transient combustible fire.

Hose stations and portable extinguishers are located throughout the area, as delineated on drawing A-1803.

Access to this area for manual fire fighting is available as follows:

a. Stairwell 4101 from the Turbine Building

b. Stairwell 1119 (at the south end) from other elevations of the Auxiliary Building

c. Stairwell 1127 (at the north end) from other elevations of the Auxiliary Building

ATTACHMENT B
FIRE HAZARD ANALYSIS
(Page 43 of 250)

Steel cable tray covers are provided for cable trays within the Combustible Control Zone, while cable tray raceways 116J5B30, 116U5D30, and 116U5E30 are provided with a Silicone Foam RTV firestop. These cable tray covers and fire stops are administratively controlled.

One 4-inch drain per 1,000 square feet of floor area is provided in the corridor area (Rooms 1402 and 1408). Six 4-inch and two 4-inch drains are provided in Rooms 1401 and 1406, respectively. The drains are piped to a sump located at El. 1967' accessed from Auxiliary Building floor El. 1974'. The sump is emptied by sump pumps. Refer to drawing series M-12LF for further information on the floor and equipment drain system.

A.16.6 Isolation and Smoke Removal

The fire barriers will contain a fire within the Fire Area until extinguished. Fire dampers will isolate HVAC openings in the fire barriers. The 6-inch-high curbing in Rooms 1401 and 1406 and the floor drains will prevent any transient combustible spill (such as lube oil) from spreading from one room to the other. The curb will also protect Rooms 1401 and 1406 against a spill in the corridor (Room 1408). Refer to Section 4.3.7.2 for smoke removal discussion.

A.16.7 Analysis

A.16.7.1 Fire Suppression

The fire barriers will contain a fire in this area and will also protect this area from a fire in any of the adjoining areas. The smoke detectors will provide an early warning of a fire in this area. The fire can be extinguished manually using the hose stations and/or the portable extinguishers.
The Combustible Control Zone ensures that fire will not involve redundant PFSSD components within the Fire Area.

The automatic detection system will trip the sprinkler system deluge valve when a cable tray fire is detected. The automatic system will actuate to extinguish the fire. The sprinkler actuation or a malfunction will be identified by Control Room annunciation. In the event of a failure of the automatic system, the fire can be extinguished manually using the hose stations.

Adequate drainage is provided in each room to remove the fire-fighting water. The 6-inch-high curb installed around Rooms 1401 and 1406 will protect the safe shutdown equipment against damage from water discharged by the sprinkler system in Rooms 1402 and 1408.

ATTACHMENT B
FIRE HAZARD ANALYSIS
(Page 44 of 250)

A.16.7.2 Safe Shutdown Capability

As applicable, XX-E-013 identifies electrical PFSSD equipment located within the Fire Area, while E-15000 identifies PFSSD circuits. The detailed PFSSD analysis for the Fire Area is provided in E-1F9910. The analysis demonstrates that a success path of PFSSD equipment, unaffected by an A-16 fire, remains available for achieving and maintaining hot standby and ultimately, transition to cold shutdown, if necessary. Additionally, PFSSD manual actions for a fire in this area were evaluated as feasible within E-1F9900. Therefore, a fire within Fire Area A-16 will not prevent safe shutdown of the plant. This, coupled with the defense in depth fire protection features and administrative controls for the Fire Area, provides reasonable assurance that 10 CFR Part 20 radiation limits will not be exceeded due to a fire in A-16.

ATTACHMENT B
FIRE HAZARD ANALYSIS
(Page 45 of 250)

Fire Area A-17 (Reference A-1803)

A.17.1 Fire Area Description

South Electrical Penetration Room 1409.

A.17.2 Major Equipment

Motor control centers, load center, switchgear, room cooler, electric cable, balance of plant computer cabinets.

A.17.3 Design Features

This Fire Area is separated from all other Fire Areas by fire barrier construction and penetration closure assemblies (structural steel fireproofing, fire doors, fire dampers, and penetration seals) that satisfy at least one of the following criteria:

- Are directly qualified by 3-hour fire endurance testing in accordance with criteria of the applicable controlling standard (ASTM E-119, ASTM E-152, UL-10B, UL-555, or IEEE-634) for the respective barrier assembly protective feature.
- Have been evaluated as providing an equivalent level of protection.
- Have been evaluated as providing protection commensurate with the fire hazards present.

Table A.17.3-1 identifies fire barrier features within the Fire Area that are unique or not directly bounded by fire endurance testing. These features are evaluated within M 663-00017A or an appropriate document referenced within M 663-00017A. These evaluations determined that each unique or unbounded fire barrier feature will prevent fire propagation from one Fire Area to another, and will not adversely impact PFSSD equipment or circuits within an adjacent Fire Area.

Table A.17.3-1
Fire Area A-17, Unique or Unbounded Fire Barrier Features

Unique or Unbounded Feature	M-663-00017A Closure Component Category
Reactor Building electrical penetrations	Penetration Seal
Structural Steel Fireproofing with unprotected thermal shorts	Structural Steel Fireproofing

A.17.4 Combustible Loading

The cumulative combustible loading classification for Fire Area A-17 is Low.

Internal panel surfaces of RJ160A/B/C/D are finished with paint of low fire rating. All cable in these panels meets the vertical flame requirements of IPCEA S-19-81 and/or IEEE 383 for flame resistance. The panels are provided with keylocks to control access to the panel interiors.

ATTACHMENT B
FIRE HAZARD ANALYSIS
(Page 46 of 250)

A.17.5 Fire Protection

This area is provided with a cross-zoned smoke detection system. Detection by either zone will alarm locally and in the Control Room. Activation by both zones will initiate the discharge of the Halon 1301 suppression system installed in this area. If one detection zone is not available, detection by the remaining zone alone will activate the Halon system.

The Halon 1301 system serves the room, with the exception of the electrical chase area, and is capable of attaining a minimum 5-percent concentration. The system is designed to maintain at least a 5-percent concentration at the level of the highest combustible for a soak time of 10 minutes. An actuation station is provided to discharge the system manually. An automatic activation will sound a local alarm, close required ventilation dampers, shut off associated ventilation and/or air-conditioning fan motors, and discharge the system after an adequate time delay for evacuation.

The Halon cylinders and the control panel are located outside the Fire Area. The control panel has a keylock switch to disable system controls during maintenance to prevent any unwanted system actuation. A 100-percent reserve cylinder bank is provided for this system.

An automatic wet pipe sprinkler system serves the electrical chase area of Room 1409. The system is equipped with closed head spray nozzles and a standard sprinkler, with deflector shield, at an intermediate level.

Access to the area is via adjacent Corridor 1408.

Two 4-inch floor drains are provided in this area. The drains are piped to a sump located at El. 1967' accessed from Auxiliary Building floor El. 1974'. The sump is emptied by sump pumps. Refer to drawing series M-12LF for further information on the floor and equipment drain system.

A.17.6 Isolation and Smoke Removal

The fire barriers will contain a fire within the Fire Area until extinguished. Fire dampers will isolate HVAC openings in the fire barriers. Refer to Section 4.3.7.2 for smoke removal discussion.

A.17.7 Analysis

A.17.7.1 Fire Suppression

The fire barriers enclosing the Fire Area will protect this area from a fire in the adjoining areas and will contain a fire within this area until extinguished. The fire will be detected, alarmed, and suppressed by the Halon system or the wet pipe sprinkler system. The Halon system discharge or a malfunction will be identified Control Room annunciation. In the event of a malfunction of the automatic systems, the hose station in Room 1408 can be used to extinguish the fire.

ATTACHMENT B
FIRE HAZARD ANALYSIS
(Page 47 of 250)

A.17.7.2 Safe Shutdown Capability

As applicable, XX-E-013 identifies electrical PFSSD equipment located within the Fire Area, while E-15000 identifies PFSSD circuits. The detailed PFSSD analysis for the Fire Area is provided in E-1F9910. The analysis demonstrates that a success path of PFSSD equipment, unaffected by an A-17 fire, remains available for achieving and maintaining hot standby and ultimately, transition to cold shutdown, if necessary. Additionally, PFSSD manual actions for a fire in this area were evaluated as feasible within E-1F9900. Therefore, a fire within Fire Area A-17 will not prevent safe shutdown of the plant. This, coupled with the defense in depth fire protection features and administrative controls for the Fire Area, provides reasonable assurance that 10 CFR Part 20 radiation limits will not be exceeded due to a fire in A-17.

ATTACHMENT B
FIRE HAZARD ANALYSIS
(Page 48 of 250)

Fire Area A-18 (Reference A-1803)

A.18.1 Fire Area Description

North Electrical Penetration Room 1410.

A.18.2 Major Equipment

Motor control centers, load center, switchgear, room cooler, electric cable, balance of plant computer cabinets.

A.18.3 Design Features

This Fire Area is separated from all other Fire Areas by fire barrier construction and penetration closure assemblies (structural steel fireproofing, fire doors, fire dampers, and penetration seals) that satisfy at least one of the following criteria:

- Are directly qualified by 3-hour fire endurance testing in accordance with criteria of the applicable controlling standard (ASTM E-119, ASTM E-152, UL-10B, UL-555, or IEEE-634) for the respective barrier assembly protective feature.
- Have been evaluated as providing an equivalent level of protection.
- Have been evaluated as providing protection commensurate with the fire hazards present.

Table A.18.3-1 identifies fire barrier features within the Fire Area that are unique or not directly bounded by fire endurance testing. These features are evaluated within M 663-00017A or an appropriate document referenced within M 663-00017A. These evaluations determined that each unique or unbounded fire barrier feature will prevent fire propagation from one Fire Area to another, and will not adversely impact PFSSD equipment or circuits within an adjacent Fire Area.

Table A.18.3-1
Fire Area A-18, Unique or Unbounded Fire Barrier Features

Unique or Unbounded Feature	M-663-00017A Closure Component Category
Reactor Building electrical penetrations	Penetration Seal
1-hour rated fire wrap protection for redundant PFSSD circuits	Fire Wrap
Penetration seals that exceed the bounding limitations of M-663-00017	Penetration Seal
Structural Steel Fireproofing with unprotected thermal shorts	Structural Steel Fireproofing

ATTACHMENT B
FIRE HAZARD ANALYSIS
(Page 49 of 250)

A.18.4 Combustible Loading

The cumulative combustible loading classification for Fire Area A-18 is Low.

Internal panel surfaces of RJ159A/B/C/D are finished with paint of low fire rating. All cable in these panels meets the vertical flame requirements of IPCEA S-19-81 and/or IEEE 383 for flame resistance. The panels are provided with keylocks to control access to the panel interiors.

A.18.5 Fire Protection

This area is provided with a cross-zoned smoke detection system. Detection by either zone will alarm locally and in the Control Room. Activation by both zones will initiate the discharge of the Halon 1301 suppression system installed in this area. If one detection zone is not available, detection by the remaining zone alone will activate the Halon system.

The Halon 1301 system serves the room with the exception of the electrical chase area and is capable of attaining a minimum 5-percent concentration. The system is designed to maintain at least a 5-percent concentration at the level of the highest combustible for a soak time of 10 minutes. An actuation station is provided to discharge the system manually. An automatic activation will sound a local alarm, close required ventilation dampers, shut off associated ventilation and/or air-conditioning fan motors, and discharge the system after an adequate time delay for evacuation.

The Halon cylinders and the control panel are located outside the Fire Area. The control panel has a keylock switch to disable system controls during maintenance to prevent any unwanted system actuation. A 100-percent reserve cylinder bank is provided for this system.

An automatic wet pipe sprinkler system serves the electrical chase area of Room 1410. The system is equipped with closed head spray nozzles and a standard sprinkler, with deflector shield, at an intermediate level.

A hose station and portable extinguishers are located outside the area in Room 1408 (corridor). Access for manual fire fighting is through the two doors from Room 1408. For access to Room 1408, see Fire Area A-16.

Access to the area is via adjacent Corridor 1408.

Two 4-inch floor drains are provided in this area. The drains are piped to a sump located at El. 1967' accessed from Auxiliary Building floor El. 1974. The sump is emptied by sump pumps. Refer to drawing series M-12LF for further information on the floor and equipment drain system.

A.18.6 Isolation and Smoke Removal

The fire barriers will contain a fire within the Fire Area until extinguished. Fire dampers will isolate HVAC openings in the fire barriers. Refer to Section 4.3.7.2 for smoke removal discussion.

ATTACHMENT B
FIRE HAZARD ANALYSIS
(Page 50 of 250)

A.18.7 Analysis

A.18.7.1 Fire Suppression

The fire barriers enclosing this Fire Area will protect this area from a fire in the adjoining areas and will contain a fire within the area until extinguished. The fire will be detected, alarmed, and suppressed by the automatic Halon system or the wet pipe sprinkler system. The Halon system discharge or a malfunction will be identified by Control Room annunciation. In the event of a malfunction of the automatic systems, the hose station in Room 1408 can be used to extinguish the fire.

Adequate drainage is provided to drain the fire-fighting water. Should manual firefighting be required, water damage to the electrical equipment in this room could result (with or without associated fire damage); however, the water damage would not adversely affect safe shutdown. The redundant equipment is located in another fire area. Since the floor in Room 1408 (corridor) slopes away from the doors to this room, water damage due to a sprinkler discharge in adjoining areas is not possible.

A.18.7.2 Safe Shutdown Capability

As applicable, XX-E-013 identifies electrical PFSSD equipment located within the Fire Area, while E-15000 identifies PFSSD circuits. The detailed PFSSD analysis for the Fire Area is provided in E-1F9910. The analysis demonstrates that a success path of PFSSD equipment, unaffected by an A-18 fire, remains available for achieving and maintaining hot standby and ultimately, transition to cold shutdown, if necessary. Additionally, PFSSD manual actions for a fire in this area were evaluated as feasible within E-1F9900. Therefore, a fire within Fire Area A-18 will not prevent safe shutdown of the plant. This, coupled with the defense in depth fire protection features and administrative controls for the Fire Area, provides reasonable assurance that 10 CFR Part 20 radiation limits will not be exceeded due to a fire in A-18.

ATTACHMENT B
FIRE HAZARD ANALYSIS
(Page 51 of 250)

Fire Area A-19 (Reference A-1804)

A.19.1 Fire Area Description

Auxiliary Building El. 2047'-6" general area Rooms 1504, 1506, and 1513.

A.19.2 Major Equipment

Auxiliary/fuel building normal exhaust filter, adsorber and exhaust fans, containment purge filter adsorber unit, containment minipurge and shutdown purge exhaust fans, access control exhaust filter adsorber unit and exhaust fans, condenser air removal filtration system filter adsorber unit and fans, control building air supply unit, control building exhaust fans, electrical equipment room cooler, auxiliary building supply air unit, containment purge and minipurge supply units, main steam enclosure supply unit, main steam enclosure building exhaust fans, unit heaters, hydrogen analyzers.

A.19.3 Design Features

This Fire Area is separated from all other Fire Areas by fire barrier construction and penetration closure assemblies (structural steel fireproofing, fire doors, fire dampers, and penetration seals) that satisfy at least one of the following criteria:

- Are directly qualified by 3-hour fire endurance testing in accordance with criteria of the applicable controlling standard (ASTM E-119, ASTM E-152, UL-10B, UL-555, or IEEE-634) for the respective barrier assembly protective feature.
- Have been evaluated as providing an equivalent level of protection.
- Have been evaluated as providing protection commensurate with the fire hazards present.

Table A.19.3-1 identifies fire barrier features within the Fire Area that are unique or not directly bounded by fire endurance testing. These features are evaluated within M 663-00017A or an appropriate document referenced within M 663-00017A. These evaluations determined that each unique or unbounded fire barrier feature will prevent fire propagation from one Fire Area to another, and will not adversely impact PFSSD equipment or circuits within an adjacent Fire Area.

Table A.19.3-1
Fire Area A-19, Unique or Unbounded Fire Barrier Features

Unique or Unbounded Feature	M-663-00017A Closure Component Category
North equipment hatch	Hatch
Containment post-tensioning hatch covers at “C” Buttress	Hatch
Missile door 41017	Fire Door
Reactor Building mechanical penetrations	Penetration Seal
Penetration seals that exceed the bounding limitations of M-663-00017	Penetration Seal
Structural Steel Fireproofing with unprotected thermal shorts	Structural Steel Fireproofing

ATTACHMENT B
FIRE HAZARD ANALYSIS
(Page 52 of 250)

A.19.4 Combustible Loading

The cumulative combustible loading classification for Fire Area A-19 is Low.

A small cylinder of hydrogen/nitrogen mix is located on the hydrogen analyzer skid. The skid is specifically designed for use with hydrogen. The cylinder, which contains 10% hydrogen is used as a calibration gas. If the gas were to leak, it would quickly dissipate below the 4% LEL of hydrogen. Therefore, the small cylinder does not introduce any additional impact on safe shutdown capability.

A.19.5 Fire Protection

An automatic smoke detection system is installed in this area. A duct smoke detector is provided for the air intake of SGK02 in Room 1513. Manual-pull stations are located near the exit doors of this floor. Detector or pull station activation results in local fire alarm notification appliance operation and annunciation within the Control Room. The Control Room annunciation of a detection or pull station alarm is point addressable for a quick and easy means to identify the location associated with the device in alarm.

All charcoal adsorber units, except the containment purge filter adsorber, operate during normal plant operation. Downstream of each charcoal bed is a thermistor-type continuous thermal detector, which alarms in the control room at high air stream temperature. The bed temperature is therefore constantly monitored for the containment purge adsorber units and for the other units when not in use. The charcoal beds are equipped with a hose connection to provide manual water spray protection.

Hose stations and portable extinguishers are located throughout this area, as delineated on drawing A-1804.

Access to this area is as follows:

a. From Turbine Building stairway (Room 4101)

b. From Control Room A/C and Filtration Room 1512

c. From the north and south stairways (Rooms 1127 and 1119)

One 4-inch floor drain per 1,000 square feet of floor area is provided in this area. The drains are piped to a sump at El. 1967' accessed from Auxiliary Building floor El. 1974'. The sump is emptied by sump pumps. Refer to drawing series M-12LF for further information on the floor and equipment drain system.

A.19.6 Isolation and Smoke Removal

The fire barriers will contain a fire within the Fire Area until extinguished. Fire dampers will isolate HVAC openings in the fire barriers. Refer to Section 4.3.7.2 for smoke removal discussion.

ATTACHMENT B
FIRE HAZARD ANALYSIS
(Page 53 of 250)

A.19.7 Analysis

A.19.7.1 Fire Suppression

The fire barrier separation provided for this area will contain a fire until extinguished and will protect the area from a fire in any one of the adjoining areas. The automatic detection system will provide an early warning of a fire in this area. The fire can be extinguished manually, using the hose stations and/or portable extinguishers located throughout the area. Adequate drainage is provided to remove the fire-fighting water. There is no safe shutdown equipment susceptible to water damage in this area.

A.19.7.2 Safe Shutdown Capability

As applicable, XX-E-013 identifies electrical PFSSD equipment located within the Fire Area, while E-15000 identifies PFSSD circuits. The detailed PFSSD analysis for the Fire Area is provided in E-1F9910. The analysis demonstrates that a success path of PFSSD equipment, unaffected by an A-19 fire, remains available for achieving and maintaining hot standby and ultimately, transition to cold shutdown, if necessary. Therefore, a fire within Fire Area A-19 will not prevent safe shutdown of the plant. This, coupled with the defense in depth fire protection features and administrative controls for the Fire Area, provides reasonable assurance that 10 CFR Part 20 radiation limits will not be exceeded due to a fire in A-19.

ATTACHMENT B
FIRE HAZARD ANALYSIS
(Page 54 of 250)

Fire Area A-20 (Reference A-1804)

A.20.1 Fire Area Description

Personnel Hatch and CCW Surge Tank Area Rooms 1502, 1503, 1505, and 1507.

A.20.2 Major Equipment

CCW surge tanks, CCW chemical addition tank, piping and valves.

A.20.3 Design Features

This Fire Area is separated from all other Fire Areas by fire barrier construction and penetration closure assemblies (structural steel fireproofing, fire doors, fire dampers, and penetration seals) that satisfy at least one of the following criteria:

- Are directly qualified by 3-hour fire endurance testing in accordance with criteria of the applicable controlling standard (ASTM E-119, ASTM E-152, UL-10B, UL-555, or IEEE-634) for the respective barrier assembly protective feature.
- Have been evaluated as providing an equivalent level of protection.
- Have been evaluated as providing protection commensurate with the fire hazards present.

Table A.20.3-1 identifies fire barrier features within the Fire Area that are unique or not directly bounded by fire endurance testing. These features are evaluated within M 663-00017A or an appropriate document referenced within M 663-00017A. These evaluations determined that each unique or unbounded fire barrier feature will prevent fire propagation from one Fire Area to another, and will not adversely impact PFSSD equipment or circuits within an adjacent Fire Area.

Table A.20.3-1
Fire Area A-20, Unique or Unbounded Fire Barrier Features

Unique or Unbounded Feature	M-663-00017A Closure Component Category
South equipment hatch	Hatch
Reactor Building personnel hatch	Hatch
South personnel elevator doors and shaft	Fire Door
Reactor Building mechanical penetrations	Penetration Seal
Penetration seals that exceed the bounding limitations of M-663-00017	Penetration Seal
Structural Steel Fireproofing with unprotected thermal shorts	Structural Steel Fireproofing

A 12-inch-thick concrete barrier wall extending 15 feet from the west barrier separates the redundant CCW surge tanks. The tank outside diameter is 8 feet.

ATTACHMENT B
FIRE HAZARD ANALYSIS
(Page 55 of 250)

A.20.4 Combustible Loading

The cumulative combustible loading classification for Fire Area A-20 is Low.

A small cylinder of hydrogen/nitrogen mix is located on the hydrogen analyzer skid. The skid is specifically designed for use with hydrogen. The cylinder, which contains 10% hydrogen is used as a calibration gas. If the gas were to leak, it would quickly dissipate below the 4% LEL of hydrogen. Therefore, the small cylinder does not introduce any additional impact on safe shutdown capability.

A.20.5 Fire Protection

Smoke detectors are installed in the elevator lobby and over the cable trays in Rooms 1505 and 1507. Manual-pull stations are installed at the exit door to the stairway. Detector or pull station activation results in local fire alarm notification appliance operation and annunciation within the Control Room. The Control Room annunciation of a detection or pull station alarm is point addressable for a quick and easy means to identify the location associated with the device in alarm.

A hose station and one portable extinguisher are installed in the elevator lobby within the Fire Area. If access to these are blocked by a fire in the area, the hose station located in Room 1504 (approximately 50 feet from the fire area) and portable extinguisher outside the area will provide backup fire-fighting capability (see drawing A-1804).

Access for manual fire fighting is as follows:

a. From Room 1504 (see Fire Area A-19 for access to Room 1504)

b. From stairway 1119

c. From Fuel Building (Room 6301)

Four-inch floor drains are provided in this area as follows:

Room	No. of Drains
1502	1
1503	1
Elevator lobby	1
1505	1
1507	2

The drains are piped to a sump at El. 1967’ accessed from Auxiliary Building floor El. 1974’. The sump is emptied by sump pumps. Refer to drawing series M-12LF for further information on the floor and equipment drain system.

ATTACHMENT B
FIRE HAZARD ANALYSIS
(Page 56 of 250)

A.20.6 Isolation and Smoke Removal

The fire barriers will contain a fire within the Fire Area until extinguished. Fire dampers will isolate HVAC openings in the fire barriers. Refer to Section 4.3.7.2 for smoke removal discussion.

A.20.7 Analysis

A.20.7.1 Fire Suppression

The fire barrier separation provided will protect this area from a fire in adjacent areas and will also contain a fire within the area until extinguished. A fire in this area will be detected and alarmed by the automatic detection system. The fire can be extinguished manually, using the hose stations and/or portable extinguishers located inside the area or in the adjacent Room 1504.

Adequate drainage is provided to remove the fire-fighting water. There is no safe shutdown equipment susceptible to water damage in this area.

A.20.7.2 Safe Shutdown Capability

As applicable, XX-E-013 identifies electrical PFSSD equipment located within the Fire Area, while E-15000 identifies PFSSD circuits. The detailed PFSSD analysis for the Fire Area is provided in E-1F9910. The analysis demonstrates that a success path of PFSSD equipment, unaffected by an A-20 fire, remains available for achieving and maintaining hot standby and ultimately, transition to cold shutdown, if necessary. Therefore, a fire within Fire Area A-20 will not prevent safe shutdown of the plant. This, coupled with the defense in depth fire protection features and administrative controls for the Fire Area, provides reasonable assurance that 10 CFR Part 20 radiation limits will not be exceeded due to a fire in A-20.

ATTACHMENT B
FIRE HAZARD ANALYSIS
(Page 57 of 250)

Fire Area A-21 (Reference A-1804)

A.21.1 Fire Area Description

Control Room AC and Filtration Units Room 1501.

A.21.2 Major Equipment

Control room ac unit (B), control room filtration system filter/adsorber unit (B), control filtration fan (B), motor control center.

A.21.3 Design Features

This Fire Area is separated from all other Fire Areas by fire barrier construction and penetration closure assemblies (structural steel fireproofing, fire doors, fire dampers, and penetration seals) that satisfy at least one of the following criteria:

- Are directly qualified by 3-hour fire endurance testing in accordance with criteria of the applicable controlling standard (ASTM E-119, ASTM E-152, UL-10B, UL-555, or IEEE-634) for the respective barrier assembly protective feature.
- Have been evaluated as providing an equivalent level of protection.
- Have been evaluated as providing protection commensurate with the fire hazards present.

Table A.21.3-1 identifies fire barrier features within the Fire Area that are unique or not directly bounded by fire endurance testing. These features are evaluated within M 663-00017A or an appropriate document referenced within M 663-00017A. These evaluations determined that each unique or unbounded fire barrier feature will prevent fire propagation from one Fire Area to another, and will not adversely impact PFSSD equipment or circuits within an adjacent Fire Area.

Table A.21.3-1
Fire Area A-21, Unique or Unbounded Fire Barrier Features

Unique or Unbounded Feature	M-663-00017A Closure Component Category
Penetration seals that exceed the bounding limitations of M-663-00017	Penetration Seal
Structural Steel Fireproofing with unprotected thermal shorts	Structural Steel Fireproofing

A.21.4 Combustible Loading

The cumulative combustible loading classification for Fire Area A-21 is Low.

ATTACHMENT B
FIRE HAZARD ANALYSIS
(Page 58 of 250)

A.21.5 Fire Protection

Automatic smoke detectors are installed in this room. Manual-pull stations are installed at the exit doors of this floor. Detector or pull station activation results in local fire alarm notification appliance operation and annunciation within the Control Room. The Control Room annunciation of a detection or pull station alarm is point addressable for a quick and easy means to identify the location associated with the device in alarm.

A hose station is installed in this area. If access to this hose station is blocked by a fire, the hose station located in Room 1506 (corridor) can be used (see drawing A-1804). This hose station is approximately 20 feet away from the access door to this area. Two portable extinguishers are located in Room 1506.

The charcoal/adsorber unit is in the control room filtration system. Downstream of each charcoal bed is a thermistor-type continuous detector, which alarms in the Control Room at high airstream temperature. The charcoal filters are equipped with a hose connection to provide manual water spray protection.

Access to this fire area is as follows:

a. From Room 1506 (see Fire Area A-19 for access to Room 1506)

b. From Control Building through the adjacent Fire Area A 22 (Room 1512)

Two 4-inch floor drains are provided in this area. The drains are piped to a sump at El. 1967' accessed from Auxiliary Building floor El. 1974'. The sump is emptied by sump pumps. Refer to drawing series M-12LF for further information on the floor and equipment drain system.

A.21.6 Isolation and Smoke Removal

The fire barriers will contain a fire within the Fire Area until extinguished. Fire dampers will isolate HVAC openings in the fire barriers. Refer to Section 4.3.7.2 for smoke removal discussion.

A.21.7 Analysis

A.21.7.1 Fire Suppression

The fire barrier separation provided for this area will contain a fire within the area until extinguished and will protect this area from a fire in adjacent areas. The automatic detection system will provide an early warning of a fire. The fire can be extinguished manually, using the hose stations and/or the portable extinguishers. Adequate drainage is provided to remove the fire-fighting water. Water or fire damage to the safe shutdown equipment will not prevent the safe shutdown of the plant.

ATTACHMENT B
FIRE HAZARD ANALYSIS
(Page 59 of 250)

A.21.7.2 Safe Shutdown Capability

As applicable, XX-E-013 identifies electrical PFSSD equipment located within the Fire Area, while E-15000 identifies PFSSD circuits. The detailed PFSSD analysis for the Fire Area is provided in E-1F9910. The analysis demonstrates that a success path of PFSSD equipment, unaffected by an A-21 fire, remains available for achieving and maintaining hot standby and ultimately, transition to cold shutdown, if necessary. Additionally, PFSSD manual actions for a fire in this area were evaluated as feasible within E-1F9900. Therefore, a fire within Fire Area A-21 will not prevent safe shutdown of the plant. This, coupled with the defense in depth fire protection features and administrative controls for the Fire Area, provides reasonable assurance that 10 CFR Part 20 radiation limits will not be exceeded due to a fire in A-21.

ATTACHMENT B
FIRE HAZARD ANALYSIS
(Page 60 of 250)

Fire Area A-22 (Reference A-1804)

A.22.1 Fire Area Description

Control Room AC and Filtration Units Room 1512.

A.22.2 Major Equipment

Control room AC unit (A), control room filtration system filter/adsorber unit (A), control filtration fan (A), motor control center.

A.22.3 Design Features

This Fire Area is separated from all other Fire Areas by fire barrier construction and penetration closure assemblies (structural steel fireproofing, fire doors, fire dampers, and penetration seals) that satisfy at least one of the following criteria:

- Are directly qualified by 3-hour fire endurance testing in accordance with criteria of the applicable controlling standard (ASTM E-119, ASTM E-152, UL-10B, UL-555, or IEEE-634) for the respective barrier assembly protective feature.
- Have been evaluated as providing an equivalent level of protection.
- Have been evaluated as providing protection commensurate with the fire hazards present.

Table A.22.3-1 identifies fire barrier features within the Fire Area that are unique or not directly bounded by fire endurance testing. These features are evaluated within M 663-00017A or an appropriate document referenced within M 663-00017A. These evaluations determined that each unique or unbounded fire barrier feature will prevent fire propagation from one Fire Area to another, and will not adversely impact PFSSD equipment or circuits within an adjacent Fire Area.

Table A.22.3-1
Fire Area A-22, Unique or Unbounded Fire Barrier Features

Unique or Unbounded Feature	M-663-00017A Closure Component Category
Fire dampers GKD0180 and GKD0182 located beyond barrier plane	Fire Damper
Penetration seals that exceed the bounding limitations of M-663-00017	Penetration Seal
Structural Steel Fireproofing with unprotected thermal shorts	Structural Steel Fireproofing

A.22.4 Combustible Loading

The cumulative combustible loading classification for Fire Area A-22 is Low.

ATTACHMENT B
FIRE HAZARD ANALYSIS
(Page 61 of 250)

A.22.5 Fire Protection

Automatic smoke detectors are installed in this room. Manual-pull stations are installed at the exit doors of this floor. Detector or pull station activation results in local fire alarm notification appliance operation and annunciation within the Control Room. The Control Room annunciation of a detection or pull station alarm is point addressable for a quick and easy means to identify the location associated with the device in alarm.

The charcoal/adsorber unit is in the control room filtration system. Downstream of each charcoal bed is a thermistor-type continuous detector, which alarms in the control room at high airstream temperature. The charcoal filters are equipped with a hose connection to provide manual water spray protection.

Two portable extinguishers are installed in this area. Additional portable extinguishers and a hose station are located in Room 1513 (see drawing A-1804).

Access to this fire area is as follows:

a. From Room 1506 (see Fire Area A-19 for access to Room 1506)

b. From Turbine Building through Room 1513

c. From Control Building

Two 4-inch floor drains are provided in this area. The drains are piped to a sump at El. 1967' accessed from Auxiliary Building floor El. 1974'. The sump is emptied by sump pumps. Refer to drawing series M-12LF for further information on the floor and equipment drain system.

A.22.6 Isolation and Smoke Removal

The fire barriers will contain a fire within the Fire Area until extinguished. Fire dampers will isolate HVAC openings in the fire barriers. Refer to Section 4.3.7.2 for smoke removal discussion.

A.22.7 Analysis

A.22.7.1 Fire Suppression

The fire barrier separation provided for this area will contain a fire within the area until extinguished and will protect this area from a fire in adjacent areas. The automatic detection system will provide an early warning of a fire.

The fire can be extinguished manually, using the hose stations and/or the portable extinguishers. Adequate drainage is provided to remove the fire-fighting water. Water or fire damage to the safe shutdown equipment will not prevent the safe shutdown of the plant.

ATTACHMENT B
FIRE HAZARD ANALYSIS
(Page 62 of 250)

A.22.7.2 Safe Shutdown Capability

As applicable, XX-E-013 identifies electrical PFSSD equipment located within the Fire Area, while E-15000 identifies PFSSD circuits. The detailed PFSSD analysis for the Fire Area is provided in E-1F9910. The analysis demonstrates that a success path of PFSSD equipment, unaffected by an A-22 fire, remains available for achieving and maintaining hot standby and ultimately, transition to cold shutdown, if necessary. Therefore, a fire within Fire Area A-22 will not prevent safe shutdown of the plant. This, coupled with the defense in depth fire protection features and administrative controls for the Fire Area, provides reasonable assurance that 10 CFR Part 20 radiation limits will not be exceeded due to a fire in A-22.

ATTACHMENT B
FIRE HAZARD ANALYSIS
(Page 63 of 250)

Fire Area A-23 (Reference A-1803 and A-1804)

A.23.1 Fire Area Description

Main Steam and Feedwater Valve Compartment Room 1508, 1509, 1411, and 1412.

A.23.2 Major Equipment

Main steam piping and isolation valves, feedwater piping and isolation valves, main steam safety relief valves, main steam atmospheric relief valves, steam generator blowdown isolation valves, auxiliary feedwater pump turbine steam supply valves, pressure transmitters, flow transmitters.

A.23.3 Design Features

This Fire Area is separated from all other Fire Areas by fire barrier construction and penetration closure assemblies (structural steel fireproofing, fire doors, fire dampers, and penetration seals) that satisfy at least one of the following criteria:

- Are directly qualified by 3-hour fire endurance testing in accordance with criteria of the applicable controlling standard (ASTM E-119, ASTM E-152, UL-10B, UL-555, or IEEE-634) for the respective barrier assembly protective feature.
- Have been evaluated as providing an equivalent level of protection.
- Have been evaluated as providing protection commensurate with the fire hazards present.

Table A.23.3-1 identifies fire barrier features within the Fire Area that are unique or not directly bounded by fire endurance testing. These features are evaluated within M 663-00017A or an appropriate document referenced within M 663-00017A. These evaluations determined that each unique or unbounded fire barrier feature will prevent fire propagation from one Fire Area to another, and will not adversely impact PFSSD equipment or circuits within an adjacent Fire Area.

Table A.23.3-1
Fire Area A-23, Unique or Unbounded Fire Barrier Features

Unique or Unbounded Feature	M-663-00017A Closure Component Category
Emergency escape hatch	Hatch
20” unsealed floor drains to Turbine Building	Fire Barrier
Missile Shield	Fire Barrier
Reactor Building mechanical penetrations	Penetration Seal
Penetration seals that exceed the bounding limitations of M-663-00017	Penetration Seal
Structural Steel Fireproofing with unprotected thermal shorts	Structural Steel Fireproofing

ATTACHMENT B
FIRE HAZARD ANALYSIS
(Page 64 of 250)

The fire area below the 2065' elevation is divided into two compartments by a 2-foot-thick concrete wall. A 9-foot x 24-foot vent opening is located at the ceiling of each compartment. The barrier wall between the two compartments has a 27-foot wide x 23-foot high vent opening located approximately 34 feet above the floor. These vent openings are required to prevent over pressurization of the compartment in the event of a postulated break of main steam piping. Due to the existence of the vent opening, the barrier wall is not fire rated.

A.23.4 Combustible Loading

The cumulative combustible loading classification for Fire Area A-23 is Low.

A.23.5 Fire Protection

An automatic detection system consisting of infrared flame detectors is installed in this Fire Area. Manual-pull stations are installed in Room 1408. Detector or pull station activation results in local fire alarm notification appliance operation and annunciation within the Control Room. The Control Room annunciation of a pull station alarm is point addressable, while detection is zoned, for a quick and easy means to identify the location associated with the device in alarm.

Portable extinguishers are located in each compartment. A hose station and additional portable extinguishers are located in Room 1506. The hose station is approximately 25 feet from the access door into Room 1508. All areas of the two compartments are within reach of this hose station. Additional hose length, if required, can be added from adjacent hose racks in Room 1506.

Access to this area is through an alarmed access door from stairway Room 1127. Access openings in the barrier wall and platforms installed at El. 2042 and 2030 provide access between compartments. An intermediate platform is installed at El. 2037 feet -7-1/2 inches in each compartment; however, access between compartments at this elevation is not possible. An emergency escape hatch to the Turbine Building is located in the torsional restraint structure adjacent to this fire area. Access to this area is from the platform at El. 2030 in Room 1412.

Adequate fire water drainage is ensured by the two 20" diameter unsealed floor drains to the Turbine Building that are provided for drainage in the event of a feedwater pipe rupture within the area. Additionally, drainage is provided from the area by the oily waste drain system, which is piped to the Auxiliary Feedwater Room sump located in Room 1128 (El. 1974). The sump is emptied by sump pumps. Refer to drawing series M-12LE for further information on the oily waste drain system.

A.23.6 Isolation and Smoke Removal

A fire in one of the compartments will be contained by the fire barriers and the concrete barrier wall until extinguished. Fire dampers will isolate HVAC openings in the fire barriers. Refer to Section 4.3.7.2 for smoke removal discussion.

ATTACHMENT B
FIRE HAZARD ANALYSIS
(Page 65 of 250)

A.23.7 Analysis

A.23.7.1 Fire Suppression

A fire in this area will be detected and alarmed by the detection system. The fire can be extinguished manually, using the portable extinguishers and/or the hose station in Room 1506. The safe shutdown instrumentation in this area has watertight enclosures. All the safe shutdown equipment in these rooms is qualified to a steam environment and an ambient temperature of 320 F.

Since the access to this area is controlled and limited, the transient combustibles introduced into these rooms will be those associated with the maintenance of equipment located in these rooms. Any major maintenance work on the isolation valves or the atmospheric relief valves will require a plant shutdown. (Maintenance on these valves will normally be done during refueling outage). Any postulated transient fire will not damage the 2-foot-thick concrete wall. Due to low combustible loading and control on access and transient combustibles, this area is judged to require a degree of fire protection equivalent to the Reactor Building. Therefore, the provisions of Appendix R, Section III.G.2.f are applied to this area.

A.23.7.2 Safe Shutdown Capability

As applicable, XX-E-013 identifies electrical PFSSD equipment located within the Fire Area, while E-15000 identifies PFSSD circuits. The detailed PFSSD analysis for the Fire Area is provided in E-1F9910. The analysis demonstrates that a success path of PFSSD equipment, unaffected by an A-23 fire, remains available for achieving and maintaining hot standby and ultimately, transition to cold shutdown, if necessary. Additionally, PFSSD manual actions for a fire in this area were evaluated as feasible within E-1F9900. Therefore, a fire within Fire Area A-23 will not prevent safe shutdown of the plant. This, coupled with the defense in depth fire protection features and administrative controls for the Fire Area, provides reasonable assurance that 10 CFR Part 20 radiation limits will not be exceeded due to a fire in A-23.

ATTACHMENT B
FIRE HAZARD ANALYSIS
(Page 66 of 250)

Fire Area A-24 (Reference A-1802)

A.24.1 Fire Area Description

North Pipe Penetration Room 1323.

A.24.2 Major Equipment

Containment isolation valves and piping.

A.24.3 Design Features

This Fire Area is separated from all other Fire Areas by fire barrier construction and penetration closure assemblies (structural steel fireproofing, fire doors, fire dampers, and penetration seals) that satisfy at least one of the following criteria:

- Are directly qualified by 3-hour fire endurance testing in accordance with criteria of the applicable controlling standard (ASTM E-119, ASTM E-152, UL-10B, UL-555, or IEEE-634) for the respective barrier assembly protective feature.
- Have been evaluated as providing an equivalent level of protection.
- Have been evaluated as providing protection commensurate with the fire hazards present.

Table A.24.3-1 identifies fire barrier features within the Fire Area that are unique or not directly bounded by fire endurance testing. These features are evaluated within M 663-00017A or an appropriate document referenced within M 663-00017A. These evaluations determined that each unique or unbounded fire barrier feature will prevent fire propagation from one Fire Area to another, and will not adversely impact PFSSD equipment or circuits within an adjacent Fire Area.

Table A.24.3-1
Fire Area A-24, Unique or Unbounded Fire Barrier Features

Unique or Unbounded Feature	M-663-00017A Closure Component Category
3-hour rated fire wrap protection for redundant PFSSD circuits	Fire Wrap
Reactor Building mechanical penetrations	Penetration Seal
Penetration seals that exceed the bounding limitations of M-663-00017	Penetration Seal
Structural Steel Fireproofing with unprotected thermal shorts	Structural Steel Fireproofing

A.24.4 Combustible Loading

The cumulative combustible loading classification for Fire Area A-24 is Low.

ATTACHMENT B
FIRE HAZARD ANALYSIS
(Page 67 of 250)

A.24.5 Fire Protection

An automatic smoke detection system is installed in this area. Manual-pull stations are located at the exit doors of this floor. Detector or pull station activation results in local fire alarm notification appliance operation and annunciation within the Control Room. The Control Room annunciation of a detection or pull station alarm is point addressable for a quick and easy means to identify the location associated with the device in alarm.

A hose station and portable extinguishers are located outside the area in Room 1320. Access is from Room 1320 through a door.

For access to Room 1320, see Fire Area A-8.

Three 4-inch floor drains are provided in this area. These drains are piped to a sump at El. 1967' accessed from Auxiliary Building floor El. 1974'. This sump is emptied by sump pumps. Refer to drawing series M-12LF for further information on the floor and equipment drain system.

A.24.6 Isolation and Smoke Removal

The fire barriers will contain a fire within the Fire Area until extinguished. Fire dampers will isolate HVAC openings in the fire barriers. Refer to Section 4.3.7.2 for smoke removal discussion.

A.24.7 Analysis

A.24.7.1 Fire Suppression

Due to low combustible loading, a fire in this area is unlikely. A fire will be detected by the smoke detection system and can be extinguished manually, using the portable extinguishers and/or the hose station in Room 1320. The fire barriers protect the safe shutdown equipment from a fire in all adjacent areas. A fire occurring in this area will be contained by the fire barriers.

Adequate drainage is provided to remove the fire-fighting water.

A.24.7.2 Safe Shutdown Capability

As applicable, XX-E-013 identifies electrical PFSSD equipment located within the Fire Area, while E-15000 identifies PFSSD circuits. The detailed PFSSD analysis for the Fire Area is provided in E-1F9910. The analysis demonstrates that a success path of PFSSD equipment, unaffected by an A-24 fire, remains available for achieving and maintaining hot standby and ultimately, transition to cold shutdown, if necessary. Additionally, PFSSD manual actions for a fire in this area were evaluated as feasible within E-1F9900. Therefore, a fire within Fire Area A-24 will not prevent safe shutdown of the plant. This, coupled with the defense in depth fire protection features and administrative controls for the Fire Area, provides reasonable assurance that 10 CFR Part 20 radiation limits will not be exceeded due to a fire in A-24.

ATTACHMENT B
FIRE HAZARD ANALYSIS
(Page 68 of 250)

Fire Area A-25 (Reference A-1802)

A.25.1 Fire Area Description

South Pipe Penetration Room 1322.

A.25.2 Major Equipment

Containment isolation valves and piping.

A.25.3 Design Features

This Fire Area is separated from all other Fire Areas by fire barrier construction and penetration closure assemblies (structural steel fireproofing, fire doors, fire dampers, and penetration seals) that satisfy at least one of the following criteria:

- Are directly qualified by 3-hour fire endurance testing in accordance with criteria of the applicable controlling standard (ASTM E-119, ASTM E-152, UL-10B, UL-555, or IEEE-634) for the respective barrier assembly protective feature.
- Have been evaluated as providing an equivalent level of protection.
- Have been evaluated as providing protection commensurate with the fire hazards present.

Table A.25.3-1 identifies fire barrier features within the Fire Area that are unique or not directly bounded by fire endurance testing. These features are evaluated within M 663-00017A or an appropriate document referenced within M 663-00017A. These evaluations determined that each unique or unbounded fire barrier feature will prevent fire propagation from one Fire Area to another, and will not adversely impact PFSSD equipment or circuits within an adjacent Fire Area.

Table A.25.3-1
Fire Area A-25, Unique or Unbounded Fire Barrier Features

Unique or Unbounded Feature	M-663-00017A Closure Component Category
Reactor Building mechanical penetrations	Penetration Seal
Penetration seals that exceed the bounding limitations of M-663-00017	Penetration Seal
Structural Steel Fireproofing with unprotected thermal shorts	Structural Steel Fireproofing

A.25.4 Combustible Loading

The cumulative combustible loading classification for Fire Area A-25 is Low.

ATTACHMENT B
FIRE HAZARD ANALYSIS
(Page 69 of 250)

A.25.5 Fire Protection

An automatic smoke detection system is installed in this area. Manual pull stations are located at the exit doors of this floor.

A hose station and two portable extinguishers are located outside the area in Room 1314. Detector or pull station activation results in local fire alarm notification appliance operation and annunciation within the Control Room. The Control Room annunciation of a detection or pull station alarm is point addressable for a quick and easy means to identify the location associated with the device in alarm.

Access is from Room 1314 through a 3-hour-rated fire door. For access to Room 1314, see Fire Area A-8.

Three 4-inch floor drains are provided in this area. The drains are piped to a sump at El. 1967' accessed from Auxiliary Building floor El. 1974'. The sump is emptied by sump pumps. Refer to drawing series M-12LF for further information on the floor and equipment drain system.

A.25.6 Isolation and Smoke Removal

The fire barriers will contain a fire within the Fire Area until extinguished. Fire dampers will isolate HVAC openings in the fire barriers. Refer to Section 4.3.7.2 for smoke removal discussion.

A.25.7 Analysis

A.25.7.1 Fire Suppression

Due to a low combustible loading, a fire in this area is highly unlikely. A fire will be detected by the smoke detection system and can be extinguished manually, using the portable extinguishers and/or hose stations in Room 1314. The fire barriers protect the safe shutdown equipment from a fire in all adjacent areas. A fire occurring within this area will be contained by the fire barriers.

Adequate drainage is provided to remove any fire-fighting water.

ATTACHMENT B
FIRE HAZARD ANALYSIS
(Page 70 of 250)

A.25.7.2 Safe Shutdown Capability

As applicable, XX-E-013 identifies electrical PFSSD equipment located within the Fire Area, while E-15000 identifies PFSSD circuits. The detailed PFSSD analysis for the Fire Area is provided in E-1F9910. The analysis demonstrates that a success path of PFSSD equipment, unaffected by an A-25 fire, remains available for achieving and maintaining hot standby and ultimately, transition to cold shutdown, if necessary. Additionally, PFSSD manual actions for a fire in this area were evaluated as feasible within E-1F9900. Therefore, a fire within Fire Area A-25 will not prevent safe shutdown of the plant. This, coupled with the defense in depth fire protection features and administrative controls for the Fire Area, provides reasonable assurance that 10 CFR Part 20 radiation limits will not be exceeded due to a fire in A-25.

ATTACHMENT B
FIRE HAZARD ANALYSIS
(Page 71 of 250)

Fire Area A-26 (Reference A-1803)

A.26.1 Fire Area Description

Room 1405 and Room 1415.

A.26.2 Major Equipment

Decontamination area scrubbers and I&C Hot Shop.

A.26.3 Design Features

This Fire Area is separated from all other Fire Areas by fire barrier construction and penetration closure assemblies (structural steel fireproofing, fire doors, fire dampers, and penetration seals) that satisfy at least one of the following criteria:

- Are directly qualified by 3-hour fire endurance testing in accordance with criteria of the applicable controlling standard (ASTM E-119, ASTM E-152, UL-10B, UL-555, or IEEE-634) for the respective barrier assembly protective feature.
- Have been evaluated as providing an equivalent level of protection.
- Have been evaluated as providing protection commensurate with the fire hazards present.

Table A.26.3-1 identifies fire barrier features within the Fire Area that are unique or not directly bounded by fire endurance testing. These features are evaluated within M 663-00017A or an appropriate document referenced within M 663-00017A. These evaluations determined that each unique or unbounded fire barrier feature will prevent fire propagation from one Fire Area to another, and will not adversely impact PFSSD equipment or circuits within an adjacent Fire Area.

Table A.26.3-1
Fire Area A-26, Unique or Unbounded Fire Barrier Features

Unique or Unbounded Feature	M-663-00017A Closure Component Category
Resin loading chute cover plate	Hatch
Penetration seals that exceed the bounding limitations of M-663-00017	Penetration Seal
Structural Steel Fireproofing with unprotected thermal shorts	Structural Steel Fireproofing

A.26.4 Combustible Loading

The cumulative combustible loading classification for Fire Area A-26 is Low. Room 1405 is a designated combustible material staging area.

The resin loading chute for the demineralizers located in El. 2000 is located in this area. Resins are received in a hydrated form, and, therefore, they do not readily ignite or sustain combustion. Administrative controls will ensure that resins only in quantities required for immediate use in recharging the demineralizers will be brought into this area. In the event that the resins dehydrate and ignite, the fire barriers enclosing this area will contain the fire and prevent damage to equipment in adjacent areas.

A.26.5 Fire Protection

An automatic smoke detection system is installed in Rooms 1405 and 1415. Manual-pull stations are located at the exit doors of this floor. Detector or pull station activation results in local fire alarm notification appliance operation and annunciation within the Control Room. The Control Room annunciation of a detection or pull station alarm is point addressable for a quick and easy means to identify the location associated with the device in alarm.

Two hose stations located in Room 1408 are within reach of this area. Two portable extinguishers are located in Room 1408 outside the area.

Access to Room 1405 is from 1408, through a 3-hour fire door, and access to Room 1415 is from Room 1408 through a 3-hour fire door. Fire separation between rooms 1405 and 1415 is not required. For access to Room 1408, see Fire Area A-16.

One 4-inch floor drain is provided in Room 1405 and two 4-inch drains in Room 1415. The drains are piped to a sump located at El. 1967' accessed from Auxiliary Building Floor El. 1974'. The sump is emptied by sump pumps. Refer to drawing series M-12LF for further information on the floor and equipment drain system.

A.26.6 Isolation and Smoke Removal

The fire barriers will contain a fire within the Fire Area until extinguished. Fire dampers will isolate HVAC openings in the fire barriers. Refer to Section 4.3.7.2 for smoke removal discussion.

A.26.7 Analysis

A.26.7.1 Fire Suppression

The fire barrier separation provided for this area (Rooms 1405 and 1415) will contain a fire in this area and will protect this area from a fire in any of the adjoining areas. The detection system will provide an early warning of a fire. The fire can be extinguished manually, using the hose station and/or portable extinguishers located outside the fire area.

Adequate drainage is provided to remove all fire-fighting water. There is no safe shutdown equipment susceptible to water damage in area A-26.

ATTACHMENT B
FIRE HAZARD ANALYSIS
(Page 73 of 250)

A.26.7.2 Safe Shutdown Capability

As applicable, XX-E-013 identifies electrical PFSSD equipment located within the Fire Area, while E-15000 identifies PFSSD circuits. The detailed PFSSD analysis for the Fire Area is provided in E-1F9910. The analysis demonstrates that a success path of PFSSD equipment, unaffected by an A-26 fire, remains available for achieving and maintaining hot standby and ultimately, transition to cold shutdown, if necessary. Therefore, a fire within Fire Area A-26 will not prevent safe shutdown of the plant. This, coupled with the defense in depth fire protection features and administrative controls for the Fire Area, provides reasonable assurance that 10 CFR Part 20 radiation limits will not be exceeded due to a fire in A-26.

ATTACHMENT B
FIRE HAZARD ANALYSIS
(Page 74 of 250)

Fire Area A-27 (Reference A-1803)

A.27.1 Fire Area Description

Reactor Trip Switchgear Room 1403.

A.27.2 Major Equipment

Reactor trip switch gear, MG sets, load centers, rod control and rod-drive power supply control cabinets, 125-V dc panel.

A.27.3 Design Features

This Fire Area is separated from all other Fire Areas by fire barrier construction and penetration closure assemblies (structural steel fireproofing, fire doors, fire dampers, and penetration seals) that satisfy at least one of the following criteria:

- Are directly qualified by 3-hour fire endurance testing in accordance with criteria of the applicable controlling standard (ASTM E-119, ASTM E-152, UL-10B, UL-555, or IEEE-634) for the respective barrier assembly protective feature.
- Have been evaluated as providing an equivalent level of protection.
- Have been evaluated as providing protection commensurate with the fire hazards present.

Table A.27.3-1 identifies fire barrier features within the Fire Area that are unique or not directly bounded by fire endurance testing. These features are evaluated within M 663-00017A or an appropriate document referenced within M 663-00017A. These evaluations determined that each unique or unbounded fire barrier feature will prevent fire propagation from one Fire Area to another, and will not adversely impact PFSSD equipment or circuits within an adjacent Fire Area.

Table A.27.3-1
Fire Area A-27, Unique or Unbounded Fire Barrier Features

Unique or Unbounded Feature	M-663-00017A Closure Component Category
Missile door 14032	Fire Door
Penetration seals that exceed the bounding limitations of M-663-00017	Penetration Seal
Structural Steel Fireproofing with unprotected thermal shorts	Structural Steel Fireproofing

A.27.4 Combustible Loading

The cumulative combustible loading classification for Fire Area A-27 is Low.

ATTACHMENT B
FIRE HAZARD ANALYSIS
(Page 75 of 250)

A.27.5 Fire Protection

This area is provided with a cross-zoned smoke detection system. Detection by either zone will alarm locally and in the Control Room. Activation by both zones will initiate the discharge of the Halon 1301 suppression system installed in this area. If one detection zone is not available, detection by the remaining zone alone will activate the Halon system.

The Halon 1301 system installed is capable of attaining a minimal 5 percent concentration. The system is designed to maintain at least a 5-percent concentration at the level of the highest combustible for a soak time of 10 minutes. An actuation station is provided to discharge the system manually. An activation by any automatic method will sound a local alarm, close required ventilation dampers, shut off associated ventilation and/or air conditioning fan motors, and discharge the system after an adequate time delay for evacuation. The Halon cylinders and the control panel are located outside the Fire Area. The control panel has a keylock switch to disable system controls during maintenance to prevent any unwanted system actuation. A 100-percent reserve cylinder bank is provided for this system.

A hose station and three portable extinguishers are located within the area. If access to these are blocked by a fire, additional hose stations and portable extinguishers located outside the area in Rooms 1402 and 3503 (Communications Corridor) are available.

Access for manual fire-fighting is from Rooms 1402 and 3503. For access to Rooms 1402 and 3503, see Fire Areas A-16 and CC-1, respectively.

Four 4-inch floor drains are provided in this area. The drains are piped to a sump located at El. 1967' accessed from Auxiliary Building floor El. 1974'. The sump is emptied by sump pumps. Refer to drawing series M-12LF for further information on the floor and equipment drain system.

A.27.6 Isolation and Smoke Removal

The fire barriers will contain a fire within the Fire Area until extinguished. Fire dampers will isolate HVAC openings in the fire barriers. Refer to Section 4.3.7.2 for smoke removal discussion.

A.27.7 Analysis

A.27.7.1 Fire Suppression

The fire barriers enclosing this area will protect this area from a fire in the adjoining areas and will contain a fire within the area until extinguished. The fire will be detected, alarmed, and suppressed by the automatic Halon system. The Halon system discharge or a malfunction will be identified by Control Room annunciation. In the event of a malfunction of the automatic system, the portable extinguishers and/or the hose stations can be used to extinguish the fire.

ATTACHMENT B
FIRE HAZARD ANALYSIS
(Page 76 of 250)

Adequate drainage is provided to drain the fire-fighting water. Should manual firefighting be required, water damage could result to the electrical equipment in this room (with or without fire damage); however, the water damage would not prevent safe shutdown. Since the floor in Room 1402 (corridor) slopes away from the doors in this room, water damage due to a sprinkler discharge in adjoining areas is not possible.

A.27.7.2 Safe Shutdown Capability

As applicable, XX-E-013 identifies electrical PFSSD equipment located within the Fire Area, while E-15000 identifies PFSSD circuits. The detailed PFSSD analysis for the Fire Area is provided in E-1F9910. The analysis demonstrates that a success path of PFSSD equipment, unaffected by an A-27 fire, remains available for achieving and maintaining hot standby and ultimately, transition to cold shutdown, if necessary. Additionally, PFSSD manual actions for a fire in this area were evaluated as feasible within E-1F9900. Therefore, a fire within Fire Area A-27 will not prevent safe shutdown of the plant. This, coupled with the defense in depth fire protection features and administrative controls for the Fire Area, provides reasonable assurance that 10 CFR Part 20 radiation limits will not be exceeded due to a fire in A-27.

ATTACHMENT B
FIRE HAZARD ANALYSIS
(Page 77 of 250)

Fire Area A-28 (Reference A-1803)

A.28.1 Fire Area Description

Auxiliary Shutdown Panel Room 1413.

A.28.2 Major Equipment

Auxiliary shutdown and control panels.

A.28.3 Design Features

This Fire Area is separated from all other Fire Areas by fire barrier construction and penetration closure assemblies (fire doors, fire dampers, and penetration seals) that are directly qualified by 3-hour fire endurance testing in accordance with criteria of the applicable controlling standard (ASTM E-119, ASTM E-152, UL-10B, UL-555, or IEEE-634) for the respective barrier assembly protective feature. In addition, within the room, the two auxiliary shutdown panels are separated by a fire barrier, which contains two normally closed fire rated doors. One door is located in front and one is located behind the panels.

Each auxiliary shutdown panel contains the controls and instrumentation for one safe shutdown train. Cable to the panels enter from the top for Separation Group 4 and from below for the redundant Separation Group 1. The Separation Group 1 circuits to the auxiliary shutdown panel enter the panel bottom directly through a penetration seal at the floor. Therefore, no exposed Separation Group 1 raceways appear in the room. The panels are provided with keylocks to control access to the panel interiors. Access to the Auxiliary Shutdown Panel Room is controlled and alarmed.

A.28.4 Combustible Loading

The cumulative combustible loading classification for Fire Area A-28 is Low. Due to the small floor area of the Auxiliary Shutdown Panel Room and the Security control of the room, combustibles are typically limited to those required for operation. Calculation XX-X-004 provides the bounding transient combustible package for this Fire Area. (Reference 3.1, Section F.6)

Internal surfaces of the auxiliary shutdown panels are finished with paint of low flame spread. All cables in these panels meet the vertical flame spread requirements of IPCEA S-19-81 and/or IEEE 383-1974.

A.28.5 Fire Protection

Smoke detectors are installed at the ceiling of this fire area. Manual-pull stations are installed adjacent to the exit doors of this floor. Detector or pull station activation results in local fire alarm notification appliance operation and annunciation within the Control Room. The Control Room annunciation of a detection or pull station alarm is point addressable for a quick and easy means to identify the location associated with the device in alarm. (Reference 3.1, Section F.6)

ATTACHMENT B
FIRE HAZARD ANALYSIS
(Page 78 of 250)

A hose station and one portable extinguisher are installed in Room 1408 (corridor) outside the area. (Reference 3.1, Section F.6)

Access for manual firefighting is from Room 1408 through an alarmed access door. For access to Room 1408, see Fire Area A-16.

No drains are provided for this Fire Area, as manual fire water suppression efforts will be minimal, considering the limited combustible loading and small footprint of the Fire Area. Additionally, a floor drain is located in Fire Area A-16 just outside the access door to A-28.

A.28.6 Isolation and Smoke Removal

The fire barriers will contain a fire within the Fire Area until extinguished. Fire dampers will isolate HVAC openings in the fire barriers. Refer to Section 4.3.7.2 for smoke removal discussion.

A.28.7 Analysis

A.28.7.1 Fire Suppression

The fire barriers around the room will protect the panels from a fire in one of the adjoining areas. The fire separation between the panels will protect either auxiliary shutdown panel from a fire postulated in the other. The smoke detectors will provide an early warning of a fire either in a cabinet or in the room. The fire can be extinguished manually, using the portable extinguisher.

A.28.7.2 Safe Shutdown Capability

As applicable, XX-E-013 identifies electrical PFSSD equipment located within the Fire Area, while E-15000 identifies PFSSD circuits. The detailed PFSSD analysis for the Fire Area is provided in E-1F9910. The analysis demonstrates that a success path of PFSSD equipment, unaffected by an A-28 fire, remains available for achieving and maintaining hot standby and ultimately, transition to cold shutdown, if necessary. Therefore, a fire within Fire Area A-28 will not prevent safe shutdown of the plant. This, coupled with the defense in depth fire protection features and administrative controls for the Fire Area, provides reasonable assurance that 10 CFR Part 20 radiation limits will not be exceeded due to a fire in A-28.

ATTACHMENT B
FIRE HAZARD ANALYSIS
(Page 79 of 250)

Fire Area A-29 (Reference A-1802)

A.29.1 Fire Area Description

Auxiliary Feedwater Pump Valve Compartment Rooms 1304, 1324, and 1327.

A.29.2 Major Equipment

Auxiliary feedwater piping and valves, backup compressed gas accumulator tanks.

A.29.3 Design Features

This Fire Area is separated from all other Fire Areas by fire barrier construction and penetration closure assemblies (structural steel fireproofing, fire doors, fire dampers, and penetration seals) that satisfy at least one of the following criteria:

- Are directly qualified by 3-hour fire endurance testing in accordance with criteria of the applicable controlling standard (ASTM E-119, ASTM E-152, UL-10B, UL-555, or IEEE-634) for the respective barrier assembly protective feature.
- Have been evaluated as providing an equivalent level of protection.
- Have been evaluated as providing protection commensurate with the fire hazards present.

Table A.29.3-1 identifies fire barrier features within the Fire Area that are unique or not directly bounded by fire endurance testing. These features are evaluated within M 663-00017A or an appropriate document referenced within M 663-00017A. These evaluations determined that each unique or unbounded fire barrier feature will prevent fire propagation from one Fire Area to another, and will not adversely impact PFSSD equipment or circuits within an adjacent Fire Area.

Table A.29.3-1
Fire Area A-29, Unique or Unbounded Fire Barrier Features

Unique or Unbounded Feature	M-663-00017A Closure Component Category
Penetration seals that exceed the bounding limitations of M-663-00017	Penetration Seal
Structural Steel Fireproofing with unprotected thermal shorts	Structural Steel Fireproofing

A.29.4 Combustible Loading

The cumulative combustible loading classification for Fire Area A-29 is Low.

ATTACHMENT B
FIRE HAZARD ANALYSIS
(Page 80 of 250)

A.29.5 Fire Protection

Due to low combustible loading in this area, a detection system is not installed. Manual-pull fire alarm stations are located at normal exits from the Turbine Building. Pull station activation results in local fire alarm notification appliance operation and annunciation within the Control Room.

Fire extinguishers are located in Rooms 1324 and 1329. A hose station is provided for this area in Room 1329. For specific locations, see A-1802.

Access to the area is via the Turbine Building.

One 4-inch drain is provided in each room. The drains are piped to a sump at El. 1974. The sump is emptied by sump pumps. Refer to drawing series M-12LE for further information on the oily waste drain system.

A.29.6 Isolation and Smoke Removal

The fire barriers will contain a fire within the Fire Area until extinguished. Fire dampers will isolate HVAC openings in the fire barriers. Refer to Section 4.3.7.2 for smoke removal discussion.

A.29.7 Analysis

A.29.7.1 Fire Suppression

The fire barriers enclosing this area will protect this area from a fire in the adjoining areas and will contain a fire within the area until extinguished.

Adequate drainage is provided to drain any fire-fighting water.

A.29.7.2 Safe Shutdown Capability

As applicable, XX-E-013 identifies electrical PFSSD equipment located within the Fire Area, while E-15000 identifies PFSSD circuits. The detailed PFSSD analysis for the Fire Area is provided in E-1F9910. The analysis demonstrates that a success path of PFSSD equipment, unaffected by an A-29 fire, remains available for achieving and maintaining hot standby and ultimately, transition to cold shutdown, if necessary. Additionally, PFSSD manual actions for a fire in this area were evaluated as feasible within E-1F9900. Therefore, a fire within Fire Area A-29 will not prevent safe shutdown of the plant.

ATTACHMENT B
FIRE HAZARD ANALYSIS
(Page 81 of 250)

Fire Area A-30 (Reference A-1802)

A.30.1 Fire Area Description

Auxiliary Feedwater Pump Valve Compartment Rooms 1305, 1328, and 1330.

A.30.2 Major Equipment

Auxiliary feedwater piping and valves, backup compressed gas accumulator tanks.

A.30.3 Design Features

This Fire Area is separated from all other Fire Areas by fire barrier construction and penetration closure assemblies (structural steel fireproofing, fire doors, fire dampers, and penetration seals) that satisfy at least one of the following criteria:

- Are directly qualified by 3-hour fire endurance testing in accordance with criteria of the applicable controlling standard (ASTM E-119, ASTM E-152, UL-10B, UL-555, or IEEE-634) for the respective barrier assembly protective feature.
- Have been evaluated as providing an equivalent level of protection.
- Have been evaluated as providing protection commensurate with the fire hazards present.

Table A.30.3-1 identifies fire barrier features within the Fire Area that are unique or not directly bounded by fire endurance testing. These features are evaluated within M 663-00017A or an appropriate document referenced within M 663-00017A. These evaluations determined that each unique or unbounded fire barrier feature will prevent fire propagation from one Fire Area to another, and will not adversely impact PFSSD equipment or circuits within an adjacent Fire Area.

Table A.30.3-1
Fire Area A-30, Unique or Unbounded Fire Barrier Features

Unique or Unbounded Feature	M-663-00017A Closure Component Category
Penetration seals that exceed the bounding limitations of M-663-00017	Penetration Seal
Structural Steel Fireproofing with unprotected thermal shorts	Structural Steel Fireproofing

A.30.4 Combustible Loading

The cumulative combustible loading classification for Fire Area A-30 is Low.

ATTACHMENT B
FIRE HAZARD ANALYSIS
(Page 82 of 250)

A.30.5 Fire Protection

Due to low combustible loading in this area, a detection system is not installed. Manual-pull fire alarm stations are located at normal exits from the Turbine Building. Pull station activation results in local fire alarm notification appliance operation and annunciation within the Control Room.

Fire extinguishers are located in Rooms 1324 and 1329. A hose station is provided for this area in Room 1329. For specific locations, see drawing A-1802.

Access to the area is via the Turbine Building.

One 4-inch drain is provided in each room. The drains are piped to a sump at El. 1974. The sump is emptied by sump pumps. Refer to drawing series M-12LE for further information on the oily waste drain system.

A.30.6 Isolation and Smoke Removal

The fire barriers will contain a fire within the Fire Area until extinguished. Fire dampers will isolate HVAC openings in the fire barriers. Refer to Section 4.3.7.2 for smoke removal discussion.

A.30.7 Analysis

A.30.7.1 Fire Suppression

The fire barriers enclosing this area will protect this area from a fire in the adjoining areas and will contain a fire within the area until extinguished.

Adequate drainage is provided to drain the fire-fighting water.

A.30.7.2 Safe Shutdown Capability

As applicable, XX-E-013 identifies electrical PFSSD equipment located within the Fire Area, while E-15000 identifies PFSSD circuits. The detailed PFSSD analysis for the Fire Area is provided in E-1F9910. The analysis demonstrates that a success path of PFSSD equipment, unaffected by an A-30 fire, remains available for achieving and maintaining hot standby and ultimately, transition to cold shutdown, if necessary. Additionally, PFSSD manual actions for a fire in this area were evaluated as feasible within E-1F9900. Therefore, a fire within Fire Area A-30 will not prevent safe shutdown of the plant.

ATTACHMENT B
FIRE HAZARD ANALYSIS
(Page 83 of 250)

Fire Area A-33 (Reference A-1801 and A-1802)

A.33.1 Fire Area Description

Auxiliary Building - El. 1989 and El. 2000, Rooms 1206, 1207, and 1329.

A.33.2 Major Equipment

Auxiliary feedwater piping, valves, and instrumentation.

A.33.3 Design Features

This Fire Area is separated from all other Fire Areas by fire barrier construction and penetration closure assemblies (structural steel fireproofing, fire doors, fire dampers, and penetration seals) that satisfy at least one of the following criteria:

- Are directly qualified by 3-hour fire endurance testing in accordance with criteria of the applicable controlling standard (ASTM E-119, ASTM E-152, UL-10B, UL-555, or IEEE-634) for the respective barrier assembly protective feature.
- Have been evaluated as providing an equivalent level of protection.
- Have been evaluated as providing protection commensurate with the fire hazards present.

Table A.33.3-1 identifies fire barrier features within the Fire Area that are unique or not directly bounded by fire endurance testing. These features are evaluated within M 663-00017A or an appropriate document referenced within M 663-00017A. These evaluations determined that each unique or unbounded fire barrier feature will prevent fire propagation from one Fire Area to another, and will not adversely impact PFSSD equipment or circuits within an adjacent Fire Area.

Table A.33.3-1
Fire Area A-33, Unique or Unbounded Fire Barrier Features

Unique or Unbounded Feature	M-663-00017A Closure Component Category
Personnel hatch from Room 1129 to 1207	Hatch
1-hour rated fire wrap protection for redundant PFSSD circuits	Fire Wrap
Penetration seals that exceed the bounding limitations of M-663-00017	Penetration Seal
Structural Steel Fireproofing with unprotected thermal shorts	Structural Steel Fireproofing

A.33.4 Combustible Loading

The cumulative combustible loading classification for Fire Area A-33 is Low.

ATTACHMENT B
FIRE HAZARD ANALYSIS
(Page 84 of 250)

A portion of Room 1207 within this Fire Area is administratively maintained as a Combustible Control Zone to strictly control transient combustibles in the 20 ft. separation area between redundant PFSSD motor operated valves AL-HV-0032 and AL-HV-0033. These valves provide a suction path for the turbine drive auxiliary feedwater pump. Insitu combustibles within the Combustible Control Zone do not pose a fire propagation path that would disable both trains of redundant PFSSD equipment.

A.33.5 Fire Protection

An automatic smoke detection system is installed in this area, except for Corridor 1329. No detection is provided in this area due to low combustible loading. An automatic wet pipe sprinkler system is provided for Rooms 1206 and 1207. Manual-pull fire alarm stations are located at normal exits from the Turbine Building. Detector or pull station activation results in local fire alarm notification appliance operation and annunciation within the Control Room. The Control Room annunciation of a detection or pull station alarm is point addressable for a quick and easy means to identify the location associated with the device in alarm. Sprinklers system actuation results in a local bell alarm and a point addressable Control Room alarm.

A hose station and portable extinguishers are located in the area, as delineated on drawings A-1801 and A-1802.

Access to this area for manual fire fighting is available as follows:

a. Door 13291 from the Turbine Building

b. Door 11281 from the Auxiliary Building through the personnel hatch between Rooms 1129 and 1207

One 4-inch drain per 1,000 square feet of floor area is provided throughout this fire area. The floor drains are piped to the auxiliary feedwater pump rooms sump. The sump is emptied by sump pumps. Refer to drawing series M-12LE for further information on the oily waste drain system.

A.33.6 Isolation and Smoke Removal

The fire barriers will contain a fire within the Fire Area until extinguished. Fire dampers will isolate HVAC openings in the fire barriers. Refer to Section 4.3.7.2 for smoke removal discussion.

A.33.7 Analysis

A.33.7.1 Fire Suppression

The automatic detection system will provide an early warning of fire in this area. The detection, automatic suppression, fire wrap, and combustible control within Rooms 1206 and 1207 ensure that a fire in this area will not involve redundant PFSSD components. The hose station in 1329 or portable extinguishers can also be used to suppress fire within this Fire Area.

ATTACHMENT B
FIRE HAZARD ANALYSIS
(Page 85 of 250)

A.33.7.2 Safe Shutdown Capability

As applicable, XX-E-013 identifies electrical PFSSD equipment located within the Fire Area, while E-15000 identifies PFSSD circuits. The detailed PFSSD analysis for the Fire Area is provided in E-1F9910. The analysis demonstrates that a success path of PFSSD equipment, unaffected by an A-33 fire, remains available for achieving and maintaining hot standby and ultimately, transition to cold shutdown, if necessary. Additionally, PFSSD manual actions for a fire in this area were evaluated as feasible within E-1F9900. Therefore, a fire within Fire Area A-33 will not prevent safe shutdown of the plant.

ATTACHMENT B
FIRE HAZARD ANALYSIS
(Page 86 of 250)

Fire Area A-34 (Reference A-1802)

A.34.1 Fire Area Description

Auxiliary Building - El. 2000, Rooms 1316 and 1317.

A.34.2 Major Equipment

Seal water heat exchanger and associated piping and valves.

A.34.3 Design Features

This Fire Area is separated from all other Fire Areas by fire barrier construction and penetration closure assemblies (structural steel fireproofing, fire doors, fire dampers, and penetration seals) that satisfy at least one of the following criteria:

- Are directly qualified by 3-hour fire endurance testing in accordance with criteria of the applicable controlling standard (ASTM E-119, ASTM E-152, UL-10B, UL-555, or IEEE-634) for the respective barrier assembly protective feature.
- Have been evaluated as providing an equivalent level of protection.
- Have been evaluated as providing protection commensurate with the fire hazards present.

A.34.4 Combustible Loading

The cumulative combustible loading classification for Fire Area A-34 is Low.

A.34.5 Fire Protection

No detection or automatic suppression is provided in this fire area due to low combustible loading. Manual-pull fire alarm stations are located at normal exits from the Auxiliary Building. Pull station activation results in local fire alarm notification appliance operation and annunciation within the Control Room. The Control Room annunciation of a pull station alarm is point addressable for a quick and easy means to identify the location associated with the device in alarm.

Hose stations and portable extinguishers are located in an adjacent fire area, as delineated on drawing A-1802.

Access to this area for manual firefighting is available through door 13161 from room 1315.

One 4-inch floor drain is provided in rooms 1316 and 1317. The floor drains are piped to a sump located at El. 1967’ accessed from Auxiliary Building floor El. 1974’. The sump is emptied by sump pumps. Refer to drawing series M-12LF for further information on the floor and equipment drain system.

ATTACHMENT B
FIRE HAZARD ANALYSIS
(Page 87 of 250)

A.34.6 Isolation and Smoke Removal

The fire barriers will contain a fire within the Fire Area until extinguished. Fire dampers will isolate HVAC openings in the fire barriers. Refer to Section 4.3.7.2 for smoke removal discussion.

A.34.7 Analysis

A.34.7.1 Fire Suppression

The fire barriers enclosing this area will protect against a fire in the adjoining areas and will contain a fire within the area until extinguished. Adequate drainage is provided to drain any firefighting water.

A.34.7.2 Safe Shutdown Capability

As applicable, XX-E-013 identifies electrical PFSSD equipment located within the Fire Area, while E-15000 identifies PFSSD circuits. The detailed PFSSD analysis for the Fire Area is provided in E-1F9910. The analysis demonstrates that a success path of PFSSD equipment, unaffected by an A-34 fire, remains available for achieving and maintaining hot standby and ultimately, transition to cold shutdown, if necessary. Additionally, PFSSD manual actions for a fire in this area were evaluated as feasible within E-1F9900. Therefore, a fire within Fire Area A-34 will not prevent safe shutdown of the plant.

ATTACHMENT B
FIRE HAZARD ANALYSIS
(Page 88 of 250)

Fire Area AB-1 (Reference A-1802)

AB.1.1 Fire Area Description

Auxiliary Boiler Room 4315.

AB.1.2 Major Equipment

Auxiliary boiler.

AB.1.3 Design Features

The portions of this Fire Area that directly communicate with other Fire Areas are separated by fire barrier construction and penetration closure assemblies (structural steel fireproofing, fire doors and penetration seals) that are directly qualified by 3-hour fire endurance testing in accordance with criteria of the applicable controlling standard (ASTM E-119, ASTM E-152, UL-10B, UL-555, or IEEE-634) for the respective barrier assembly protective feature. Stairwell T-6 enclosure is 2-hour fire rated. The roof, grade floor, and walls of the Auxiliary Boiler Room that communicate to the exterior are not credited fire boundaries.

AB.1.4 Combustible Loading

The cumulative combustible loading classification for Fire Area AB-1 is Low.

AB.1.5 Fire Protection

Infrared flame detectors are provided in this area. A manual-pull fire alarm station is located near the exit doorways from this area. An automatic wet-pipe sprinkler system is provided to protect the entire area. Detector or pull station activation results in local fire alarm notification appliance operation and annunciation within the Control Room. The Control Room annunciation of a detection or pull station alarm is zoned for a quick and easy means to identify the location associated with the device in alarm. Sprinklers system actuation results in a local bell alarm and a point addressable Control Room alarm.

Hose stations and portable extinguishers are provided just outside this area in the Turbine Building. In addition, a portable extinguisher is provided inside the area, near the exterior door.

The auxiliary boiler is provided with an emergency stop switch located in the Turbine Building just outside the Auxiliary Boiler Room.

Auxiliary boiler fuel oil tank 1FO01T has a capacity of 469,980 gallons and is located outside of the protected area in the southwest portion of the owner controlled area. A manual foam extinguishing system is provided with internal injection into the tank. It also supplies a hose station for external use. The tank is provided with a dike to contain fuel oil tank contents and fire suppression water.

Access to the Auxiliary Boiler Room is via the Turbine Building or the exterior or the room on the southeast side.

ATTACHMENT B
FIRE HAZARD ANALYSIS
(Page 89 of 250)

Floor drains in the area are piped to the Auxiliary Boiler Room sump. The sump is emptied by sump pumps. Refer to drawing series M-12LE for further information on the oily waste drain system.

AB.1.6 Isolation and Smoke Removal

A fire in the area will be contained by the fire barriers until extinguished. No ventilation ductwork penetrates the fire barriers of this Fire Area. Fusible link operated smoke and heat venting is also provided in the roof of AB-1. Refer to Section 4.3.7.2 for smoke removal discussion.

AB.1.7 Analysis

AB.1.7.1 Fire Suppression

A fire in this area will be detected and alarmed by the automatic detection system. In the event of the failure of the automatic sprinkler system, fire barriers will prevent fire spread to communicating Fire Areas. Fire may be extinguished manually, using a fire extinguisher and/or hose station.

AB.1.7.2 Safe Shutdown Capability

This area contains no PFSSD equipment or circuits and is separated from adjoining safe shutdown areas by a fire barrier construction. Therefore, a fire within Fire Area AB-1 will not prevent safe shutdown of the plant.

ATTACHMENT B
FIRE HAZARD ANALYSIS
(Page 90 of 250)

Fire Area C-1 (Reference A-1801)

C.1.1 Fire Area Description

Pipe Space and Tank Area Control Building, El. 1974 Room 3101 and 3104.

C.1.2 Major Equipment

ESW piping and motor-operated isolation valves, detergent drain tank and pumps, control building floor and equipment drain sump pumps, chemical equipment drain sump pumps.

C.1.3 Design Features

This Fire Area is separated from all other Fire Areas by fire barrier construction and penetration closure assemblies (structural steel fireproofing, fire doors, fire dampers, and penetration seals) that satisfy at least one of the following criteria:

- Are directly qualified by 3-hour fire endurance testing in accordance with criteria of the applicable controlling standard (ASTM E-119, ASTM E-152, UL-10B, UL-555, or IEEE-634) for the respective barrier assembly protective feature.
- Have been evaluated as providing an equivalent level of protection.
- Have been evaluated as providing protection commensurate with the fire hazards present.

Table C.1.3-1 identifies fire barrier features within the Fire Area that are unique or not directly bounded by fire endurance testing. These features are evaluated within M 663-00017A or an appropriate document referenced within M 663-00017A. These evaluations determined that each unique or unbounded fire barrier feature will prevent fire propagation from one Fire Area to another, and will not adversely impact PFSSD equipment or circuits within an adjacent Fire Area.

Table C.1.3-1
Fire Area C-1, Unique or Unbounded Fire Barrier Features

Unique or Unbounded Feature	M-663-00017A Closure Component Category
Penetration seals that exceed the bounding limitations of M-663-00017	Penetration Seal
Structural Steel Fireproofing with unprotected thermal shorts	Structural Steel Fireproofing

Stairwell 3104 is separated by 3101 by a 2-hour rated fire barrier and where room 3104 interfaces with other fire areas the barrier is rated for 3-hours.

ATTACHMENT B
FIRE HAZARD ANALYSIS
(Page 91 of 250)

C.1.4 Combustible Loading

The cumulative combustible loading classification for Fire Area C-1 is Low.

A portion of Room 3101 within this Fire Area is administratively maintained as a Combustible Control Zone to strictly control transient combustibles in the 20 ft. separation area between redundant PFSSD motor operated valves for the essential service water (ESW) system. Insitu combustibles within the Combustible Control Zone do not pose a fire propagation path that would disable both trains of redundant PFSSD equipment.

C.1.5 Fire Protection

Room 3101 is provided with smoke detectors in the area of the ESW motor-operated isolation valves to provide early warning of a fire in this area. A manual-pull station is located at the north exit into Room 3102. Detector or pull station activation results in local fire alarm notification appliance operation and annunciation within the Control Room. The Control Room annunciation of a detection or pull station alarm is point addressable for a quick and easy means to identify the location associated with the device in alarm.

An automatic wet pipe sprinkler system is provided for Room 3101.

Two manual hose stations are located within the area as delineated on drawing A-1801.

Portable extinguishers are located within the area and in the corridor outside access doors between the Control Building and the Auxiliary Building (Room 1101).

Access to this area for manual fire fighting is available via Auxiliary Building Corridor 1101 and Communications Corridor 3102.

Drainage in this area is by nine 4-inch floor drains. This is adequate to handle maximum sprinkler and hose station discharge. The drains discharge to the Control Building sump, which is emptied by sump pumps. Refer to drawing series M-12LF for further information on the floor and equipment drain system.

C.1.6 Isolation and Smoke Removal

The fire barriers will contain a fire within the Fire Area until extinguished. Fire dampers will isolate HVAC openings in the fire barriers. Refer to Section 4.3.7.2 for smoke removal discussion.

C.1.7 Analysis

C.1.7.1 Fire Suppression

A fire in this area will be detected and alarmed by the smoke detection system. In the event that a fire develops, it will be contained by the fire barriers and extinguished by the wet pipe system. The Combustible Control Zone ensures that fire will not involve redundant PFSSD components within the Fire Area. Should the automatic suppression system fail, manual hose streams and extinguishers can be used to extinguish the fire.

ATTACHMENT B
FIRE HAZARD ANALYSIS
(Page 92 of 250)

C.1.7.2 Safe Shutdown Capability

As applicable, XX-E-013 identifies electrical PFSSD equipment located within the Fire Area, while E-15000 identifies PFSSD circuits. The detailed PFSSD analysis for the Fire Area is provided in E-1F9910. The analysis demonstrates that a success path of PFSSD equipment, unaffected by a C-1 fire, remains available for achieving and maintaining hot standby and ultimately, transition to cold shutdown, if necessary. Therefore, a fire within Fire Area C-1 will not prevent safe shutdown of the plant. This, coupled with the defense in depth fire protection features and administrative controls for the Fire Area, provides reasonable assurance that 10 CFR Part 20 radiation limits will not be exceeded due to a fire in C-1.

ATTACHMENT B
FIRE HAZARD ANALYSIS
(Page 93 of 250)

Fire Area C-2 (Reference A-1801)

C.2.1 Fire Area Description

North vertical cable chase Room 3106, Control Building. El. 1974 to 1984.

C.2.2 Major Equipment

Electric cable only.

C.2.3 Design Features

This Fire Area is separated from all other Fire Areas by fire barrier construction and penetration closure assemblies (structural steel fireproofing, fire doors, fire dampers, and penetration seals) that satisfy at least one of the following criteria:

- Are directly qualified by 3-hour fire endurance testing in accordance with criteria of the applicable controlling standard (ASTM E-119, ASTM E-152, UL-10B, UL-555, or IEEE-634) for the respective barrier assembly protective feature.
- Have been evaluated as providing an equivalent level of protection.
- Have been evaluated as providing protection commensurate with the fire hazards present.

Table C.2.3-1 identifies fire barrier features within the Fire Area that are unique or not directly bounded by fire endurance testing. These features are evaluated within M 663-00017A or an appropriate document referenced within M 663-00017A. These evaluations determined that each unique or unbounded fire barrier feature will prevent fire propagation from one Fire Area to another, and will not adversely impact PFSSD equipment or circuits within an adjacent Fire Area.

Table C.2.3-1
Fire Area C-2, Unique or Unbounded Fire Barrier Features

Unique or Unbounded Feature	M-663-00017A Closure Component Category
Structural Steel Fireproofing with unprotected thermal shorts	Structural Steel Fireproofing

C.2.4 Combustible Loading

The cumulative combustible loading classification for Fire Area C-2 is Moderate. Refer to Section 4.3.5 for further discussion regarding cable chase combustible loading.

ATTACHMENT B
FIRE HAZARD ANALYSIS
(Page 94 of 250)

C.2.5 Fire Protection

Automatic smoke detection is provided in this area. A manual-pull fire alarm station is located at the normal exit from the adjacent Room 3101. Detector or pull station activation results in local fire alarm notification appliance operation and annunciation within the Control Room. The Control Room annunciation of a detection or pull station alarm is point addressable for a quick and easy means to identify the location associated with the device in alarm.

An automatic wet pipe sprinkler system, is installed in this area. The system is equipped with closed head spray nozzles. Backup to the automatic sprinkler systems is by portable extinguishers and manual hose stations located in Fire Area C-1.

Access to the chase is through a 2 foot 8 inch by 4 foot 6 inch, 3-hour-rated fire door.

No drains are provided for this Fire Area. Fire suppression water will escape under the rollup access fire door and into floor drains within Fire Area C-1. There are no PFSSD equipment or circuits in this area. Therefore, water accumulation in the area would not affect safe shutdown capability.

C.2.6 Isolation and Smoke Removal

The fire barriers will contain a fire within the Fire Area until extinguished. No ventilation ductwork penetrates the fire barriers in this Fire Area. Refer to Section 4.3.7.2 for smoke removal discussion.

C.2.7 Analysis

C.2.7.1 Fire Suppression

A fire in this area will be detected and alarmed by the automatic detection system. In the event that a fire develops, it will be contained by the fire barrier and extinguished by the automatic suppression system. Should the automatic suppression system fail, manual hose streams can be directed through the access opening to extinguish the fire.

C.2.7.2 Safe Shutdown Capability

There are no PFSSD equipment or circuits in this area, therefore fire damage to this area will not prevent safe shutdown. This, coupled with the defense in depth fire protection features and administrative controls for the Fire Area, provides reasonable assurance that 10 CFR Part 20 radiation limits will not be exceeded due to a fire in C-2.

ATTACHMENT B
FIRE HAZARD ANALYSIS
(Page 95 of 250)

Fire Area C-3 (Reference A-1801)

C.3.1 Fire Area Description

South vertical cable chase Room 3105, Control Building. El. 1974 to 1984.

C.3.2 Major Equipment

Electric cable only.

C.3.3 Design Features

This Fire Area is separated from all other Fire Areas by fire barrier construction and penetration closure assemblies (structural steel fireproofing, fire doors, fire dampers, and penetration seals) that satisfy at least one of the following criteria:

- Are directly qualified by 3-hour fire endurance testing in accordance with criteria of the applicable controlling standard (ASTM E-119, ASTM E-152, UL-10B, UL-555, or IEEE-634) for the respective barrier assembly protective feature.
- Have been evaluated as providing an equivalent level of protection.
- Have been evaluated as providing protection commensurate with the fire hazards present.

Table C.3.3-1 identifies fire barrier features within the Fire Area that are unique or not directly bounded by fire endurance testing. These features are evaluated within M 663-00017A or an appropriate document referenced within M 663-00017A. These evaluations determined that each unique or unbounded fire barrier feature will prevent fire propagation from one Fire Area to another, and will not adversely impact PFSSD equipment or circuits within an adjacent Fire Area. .

Table C.3.3-1
Fire Area C-3, Unique or Unbounded Fire Barrier Features

Unique or Unbounded Feature	M-663-00017A Closure Component Category
Structural Steel Fireproofing with unprotected thermal shorts	Structural Steel Fireproofing

C.3.4 Combustible Loading

The cumulative combustible loading classification for Fire Area C-3 is High. Refer to Section 4.3.5 for further discussion regarding cable chase combustible loading.

ATTACHMENT B
FIRE HAZARD ANALYSIS
(Page 96 of 250)

C.3.5 Fire Protection

Automatic smoke detection is provided in this area. A manual-pull fire alarm station is located at the normal exit from the adjacent Room 3101. Detector or pull station activation results in local fire alarm notification appliance operation and annunciation within the Control Room. The Control Room annunciation of a detection or pull station alarm is point addressable for a quick and easy means to identify the location associated with the device in alarm.

An automatic wet pipe sprinkler system, is installed in this area. The system is equipped with closed head spray nozzles. Backup to the automatic sprinkler systems is by portable extinguishers and manual hose stations located in Fire Area C-1.

Access to the chase is through a 2 foot 8 inch by 4 foot 6 inch, 3-hour-rated fire door.

No drains are provided for this Fire Area. Fire suppression water will escape under the rollup access fire door and into floor drains within Fire Area C-1. There are no PFSSD equipment or circuits in this area. Therefore, water accumulation in the area would not affect safe shutdown capability.

C.3.6 Isolation and Smoke Removal

The fire barriers will contain a fire within the Fire Area until extinguished. No ventilation ductwork penetrates the fire barriers in this Fire Area. Refer to Section 4.3.7.2 for smoke removal discussion.

C.3.7 Analysis

C.3.7.1 Fire Suppression

A fire in this area will be detected and alarmed by the automatic detection system. In the event that a fire develops, it will be contained by the fire barriers and extinguished by the automatic suppression system. Should the automatic suppression system fail, manual hose streams can be directed through the access opening to extinguish the fire.

C.3.7.2 Safe Shutdown Capability

There are no PFSSD equipment or circuits in this area, therefore fire damage to this area will not prevent safe shutdown. This, coupled with the defense in depth fire protection features and administrative controls for the Fire Area, provides reasonable assurance that 10 CFR Part 20 radiation limits will not be exceeded due to a fire in C-3.

ATTACHMENT B
FIRE HAZARD ANALYSIS
(Page 97 of 250)

Fire Area C-5 (Reference A-1801)

C.5.1 Fire Area Description

Access Control area above and below suspended ceiling Rooms 3206, 3212 through 3224, Pipe Chases, and Electrical Chase accessible from 3212.

C.5.2 Major Equipment

Electric cable, laundry machinery, medical supplies, and office equipment

C.5.3 Design Features

This Fire Area is separated from all other Fire Areas by fire barrier construction and penetration closure assemblies (structural steel fireproofing, fire doors, fire dampers, and penetration seals) that satisfy at least one of the following criteria:

- Are directly qualified by 3-hour fire endurance testing in accordance with criteria of the applicable controlling standard (ASTM E-119, ASTM E-152, UL-10B, UL-555, or IEEE-634) for the respective barrier assembly protective feature.
- Have been evaluated as providing an equivalent level of protection.
- Have been evaluated as providing protection commensurate with the fire hazards present.

Table C.5.3-1 identifies fire barrier features within the Fire Area that are unique or not directly bounded by fire endurance testing. These features are evaluated within M 663-00017A or an appropriate document referenced within M 663-00017A. These evaluations determined that each unique or unbounded fire barrier feature will prevent fire propagation from one Fire Area to another, and will not adversely impact PFSSD equipment or circuits within an adjacent Fire Area.

Table C.5.3-1
Fire Area C-5, Unique or Unbounded Fire Barrier Features

Unique or Unbounded Feature	M-663-00017A Closure Component Category
Fire door 32092	Fire Door
Penetration seals that exceed the bounding limitations of M-663-00017	Penetration Seal
Structural Steel Fireproofing with unprotected thermal shorts	Structural Steel Fireproofing

C.5.4 Combustible Loading

The cumulative combustible loading classification for Fire Area C-5 is Low.

ATTACHMENT B
FIRE HAZARD ANALYSIS
(Page 98 of 250)

C.5.5 Fire Protection

Smoke detectors are installed above and below the suspended ceiling except as noted in Attachment A. Manual-pull fire alarm stations are located near the exit doorways from the Access Control area. Detector or pull station activation results in local fire alarm notification appliance operation and annunciation within the Control Room. The Control Room annunciation of a detection or pull station alarm is point addressable for a quick and easy means to identify the location associated with the device in alarm.

An automatic wet pipe sprinkler system is provided in this area above and below the suspended ceiling as detailed in Attachment A. Water flow in the system is alarmed in the Control Room.

Hose stations and portable extinguishers are provided in the corridors within the Access Control area, as indicated on drawing A-1801.

Access to this area for manual firefighting is available via Communications Corridor 3225 and Auxiliary Building Corridor 1101 through Fire Area C-6.

Adequate floor drains are provided to remove sprinkler and hose station discharge without appreciable accumulation. Any sprinkler discharge in the area above the suspended ceiling will drain through the suspended ceiling to the Access Control area below. Drainage is discharged to the Control Building sump, which is emptied by sump pumps. Refer to drawing series M-12LF for further information on the floor and equipment drain system.

C.5.6 Isolation and Smoke Removal

The fire barriers will contain a fire within the Fire Area until extinguished. Fire dampers will isolate HVAC openings in the fire barriers. Refer to Section 4.3.7.2 for smoke removal discussion.

C.5.7 Analysis

C.5.7.1 Fire Suppression

A fire in this area will be detected and alarmed by the automatic detection system. In the event that a fire occurs, the automatic suppression system will actuate and extinguish the fire. In the event of failure of the automatic system, the manual hose stations provide the capability of extinguishing the fire.

The suspended ceiling panels may be removed as necessary during firefighting efforts involving the normally concealed space above the panels. The majority of the cable trays in this area are no more than 12 feet above the floor elevation, and no trays are more than 14 feet above the floor. Consequently, a fire in these cable trays can be extinguished by manual hose stations from the floor (assuming failure of the automatic wet pipe sprinkler system above the trays).

ATTACHMENT B
FIRE HAZARD ANALYSIS
(Page 99 of 250)

C.5.7.2 Safe Shutdown Capability

As applicable, XX-E-013 identifies electrical PFSSD equipment located within the Fire Area, while E-15000 identifies PFSSD circuits. The detailed PFSSD analysis for the Fire Area is provided in E-1F9910. The analysis demonstrates that a success path of PFSSD equipment, unaffected by a C-5 fire, remains available for achieving and maintaining hot standby and ultimately, transition to cold shutdown, if necessary. Therefore, a fire within Fire Area C-5 will not prevent safe shutdown of the plant.

ATTACHMENT B
FIRE HAZARD ANALYSIS
(Page 100 of 250)

Fire Area C-6 (Reference A-1801)

C.6.1 Fire Area Description

Access Control area above and below suspended ceiling Rooms 3201 through 3205 and 3207 through 3211, Pipe Chases, and Electrical Chase accessible from 3205.

C.6.2 Major Equipment

Electric cable, laundry machinery, medical supplies, and office equipment.

C.6.3 Design Features

This Fire Area is separated from all other Fire Areas by fire barrier construction and penetration closure assemblies (fire doors, fire dampers, and penetration seals) that satisfy at least one of the following criteria:

- Are directly qualified by 3-hour fire endurance testing in accordance with criteria of the applicable controlling standard (ASTM E-119, ASTM E-152, UL-10B, UL-555, or IEEE-634) for the respective barrier assembly protective feature.
- Have been evaluated as providing an equivalent level of protection.
- Have been evaluated as providing protection commensurate with the fire hazards present.

Table C.6.3-1 identifies fire barrier features within the Fire Area that are unique or not directly bounded by fire endurance testing. These features are evaluated within M 663-00017A or an appropriate document referenced within M 663-00017A. These evaluations determined that each unique or unbounded fire barrier feature will prevent fire propagation from one Fire Area to another, and will not adversely impact PFSSD equipment or circuits within an adjacent Fire Area.

Table C.6.3-1
Fire Area C-6, Unique or Unbounded Fire Barrier Features

Unique or Unbounded Feature	M-663-00017A Closure Component Category
Fire door 32015	Fire Door
Fire door 32092	Fire Door
Penetration seals that exceed the bounding limitations of M-663-00017	Penetration Seal
Structural Steel Fireproofing with unprotected thermal shorts	Structural Steel Fireproofing

The stairway enclosure at the 1984' elevation is 2-hour rated, The remaining elevations are 3-hour rated with the exception of the ceiling. The ceiling of the stairway in this area forms part of the roof. Since no Fire Areas are above the ceiling, it is not rated. The roof is non-combustible concrete with built up Class A roofing. Therefore, structural integrity will be maintained in the event of a fire. Safe shutdown cable is separated from the Access Control area below by a noncombustible suspended ceiling.

ATTACHMENT B
FIRE HAZARD ANALYSIS
(Page 101 of 250)

C.6.4 Combustible Loading

The cumulative combustible loading classification for Fire Area C-6 is Low.

C.6.5 Fire Protection

Smoke detectors are installed above and below the suspended ceiling except as noted in Attachment A. Manual-pull fire alarm stations are located near the exit doorways from the Access Control area. Detector or pull station activation results in local fire alarm notification appliance operation and annunciation within the Control Room. The Control Room annunciation of a detection or pull station alarm is point addressable for a quick and easy means to identify the location associated with the device in alarm.

An automatic wet pipe sprinkler system is provided in this area above and below the suspended ceiling as detailed in Attachment A. Water flow in the system is alarmed in the Control Room.

Hose stations and portable extinguishers are provided in the corridors within the Access Control area, as indicated on drawing A-1801.

Access to this area for manual firefighting is available via Communications Corridor 3225 through Fire Area C-5 and Auxiliary Building Corridor 1101.

Adequate floor drains are provided to remove sprinkler discharge without appreciable accumulation. Any sprinkler discharge in the area above the suspended ceiling will drain through the suspended ceiling to the Access Control area below. Drainage is discharged to the Control Building sump, which is emptied by sump pumps. Refer to drawing series M-12LF for further information on the floor and equipment drain system.

C.6.6 Isolation and Smoke Removal

The fire barriers will contain a fire within the Fire Area until extinguished. Fire dampers will isolate HVAC openings in the fire barriers. Refer to Section 4.3.7.2 for smoke removal discussion.

C.6.7 Analysis

C.6.7.1 Fire Suppression

A fire in this area will be detected and alarmed by the automatic detection system. In the event that a fire occurs, the automatic suppression system will actuate and extinguish the fire. In the event of failure of the automatic system, the manual hose stations provide the capability of extinguishing the fire.

The suspended ceiling panels may be removed as necessary during firefighting efforts involving the normally concealed space above the panels. The majority of the cable trays in this area are no more than 12 feet above the floor elevation, and no trays are more than 14 feet above the floor. Consequently, a fire in these cable trays can be extinguished by

manual hose stations from the floor (assuming failure of the automatic wet pipe sprinkler system above the trays).

C.6.7.2 Safe Shutdown Capability

As applicable, XX-E-013 identifies electrical PFSSD equipment located within the Fire Area, while E-15000 identifies PFSSD circuits. The detailed PFSSD analysis for the Fire Area is provided in E-1F9910. The analysis demonstrates that a success path of PFSSD equipment, unaffected by a C-6 fire, remains available for achieving and maintaining hot standby and ultimately, transition to cold shutdown, if necessary. Therefore, a fire within Fire Area C-6 will not prevent safe shutdown of the plant. This, coupled with the defense in depth fire protection features and administrative controls for the Fire Area, provides reasonable assurance that 10 CFR Part 20 radiation limits will not be exceeded due to a fire in C-6.

ATTACHMENT B
FIRE HAZARD ANALYSIS
(Page 103 of 250)

Fire Area C-7 (Reference A-1801)

C.7.1 Fire Area Description

North vertical cable chase Room 3230, Control Building. El. 1984 to 2000.

C.7.2 Major Equipment

Electric cable only

C.7.3 Design Features

This Fire Area is separated from all other Fire Areas by fire barrier construction and penetration closure assemblies (fire doors, fire dampers, and penetration seals) that satisfy at least one of the following criteria:

- Are directly qualified by 3-hour fire endurance testing in accordance with criteria of the applicable controlling standard (ASTM E-119, ASTM E-152, UL-10B, UL-555, or IEEE-634) for the respective barrier assembly protective feature.
- Have been evaluated as providing an equivalent level of protection.
- Have been evaluated as providing protection commensurate with the fire hazards present.

Table C.7.3-1 identifies fire barrier features within the Fire Area that are unique or not directly bounded by fire endurance testing. These features are evaluated within M 663-00017A or an appropriate document referenced within M 663-00017A. These evaluations determined that each unique or unbounded fire barrier feature will prevent fire propagation from one Fire Area to another, and will not adversely impact PFSSD equipment or circuits within an adjacent Fire Area.

Table C.7.3-1
Fire Area C-7, Unique or Unbounded Fire Barrier Features

Unique or Unbounded Feature	M-663-00017A Closure Component Category
Structural Steel Fireproofing with unprotected thermal shorts	Structural Steel Fireproofing

C.7.4 Combustible Loading

The cumulative combustible loading classification for Fire Area C-7 is High. Refer to Section 4.3.5 for further discussion regarding cable chase combustible loading.

ATTACHMENT B
FIRE HAZARD ANALYSIS
(Page 104 of 250)

C.7.5 Fire Protection

Automatic smoke detection is provided in this area. A manual-pull fire alarm station is located at the normal exit from the adjacent area. Detector or pull station activation results in local fire alarm notification appliance operation and annunciation within the Control Room. The Control Room annunciation of a detection or pull station alarm is point addressable for a quick and easy means to identify the location associated with the device in alarm.

An automatic wet pipe sprinkler system, is installed in this area. The system is equipped with closed head spray nozzles. Backup to the automatic sprinkler systems is by portable extinguishers and manual hose stations located in the Access Control area.

Access to the chase is through a 3-hour-rated fire door.

Drainage in this area is by one 4-inch floor drain. This is more than adequate to handle maximum sprinkler system discharge and hose station discharge. The drain discharges to the 1974' elevation and ultimately to the Control Building Sump, which is emptied by sump pumps. Refer to drawing series M-12LF for further information on the floor and equipment drain system.

C.7.6 Isolation and Smoke Removal

The fire barriers will contain a fire within the Fire Area until extinguished. No ventilation ductwork penetrates the fire barriers in this Fire Area. Refer to Section 4.3.7.2 for smoke removal discussion.

C.7.7 Analysis

C.7.7.1 Fire Suppression

A fire in this area will be detected and alarmed by the automatic detection system. In the event that a fire develops, it will be contained by the fire barriers until extinguished by the automatic suppression system. Should the automatic suppression system fail, manual hose streams can be directed through the access opening to extinguish the fire.

C.7.7.2 Safe Shutdown Capability

As applicable, XX-E-013 identifies electrical PFSSD equipment located within the Fire Area, while E-15000 identifies PFSSD circuits. The detailed PFSSD analysis for the Fire Area is provided in E-1F9910. The analysis demonstrates that a success path of PFSSD equipment, unaffected by a C-7 fire, remains available for achieving and maintaining hot standby and ultimately, transition to cold shutdown, if necessary. Additionally, PFSSD manual actions for a fire in this area were evaluated as feasible within E-1F9900. Therefore, a fire within Fire Area C-7 will not prevent safe shutdown of the plant.

ATTACHMENT B
FIRE HAZARD ANALYSIS
(Page 105 of 250)

Fire Area C-8 (Reference A-1801)

C.8.1 Fire Area Description

South vertical cable chase Room 3229, Control Building. El. 1984 to 2000.

C.8.2 Major Equipment

Electric cable only.

C.8.3 Design Features

This Fire Area is separated from all other Fire Areas by fire barrier construction and penetration closure assemblies (fire doors, fire dampers, and penetration seals) that satisfy at least one of the following criteria:

- Are directly qualified by 3-hour fire endurance testing in accordance with criteria of the applicable controlling standard (ASTM E-119, ASTM E-152, UL-10B, UL-555, or IEEE-634) for the respective barrier assembly protective feature.
- Have been evaluated as providing an equivalent level of protection.
- Have been evaluated as providing protection commensurate with the fire hazards present.

Table C.8.3-1 identifies fire barrier features within the Fire Area that are unique or not directly bounded by fire endurance testing. These features are evaluated within M 663-00017A or an appropriate document referenced within M 663-00017A. These evaluations determined that each unique or unbounded fire barrier feature will prevent fire propagation from one Fire Area to another, and will not adversely impact PFSSD equipment or circuits within an adjacent Fire Area.

Table C.8.3-1
Fire Area C-8, Unique or Unbounded Fire Barrier Features

Unique or Unbounded Feature	M-663-00017A Closure Component Category
Structural Steel Fireproofing with unprotected thermal shorts	Structural Steel Fireproofing

C.8.4 Combustible Loading

The cumulative combustible loading classification for Fire Area C-8 is Moderate. Refer to Section 4.3.5 for further discussion regarding cable chase combustible loading.

ATTACHMENT B
FIRE HAZARD ANALYSIS
(Page 106 of 250)

C.8.5 Fire Protection

Automatic smoke detection is provided in this area. A manual-pull fire alarm station is located at the normal exit from the adjacent area. Detector or pull station activation results in local fire alarm notification appliance operation and annunciation within the Control Room. The Control Room annunciation of a detection or pull station alarm is point addressable for a quick and easy means to identify the location associated with the device in alarm.

An automatic wet pipe sprinkler system, is installed in this area. The system is equipped with closed head spray nozzles. Backup to the automatic sprinkler system is by portable extinguishers and manual hose stations located in the Access Control area.

Access to the chase is through a 3-hour-rated door.

Drainage in this area is by one 4-inch floor drain. This is more than adequate to handle maximum sprinkler system discharge and hose station discharge. The drain discharges to the 1974' elevation and ultimately to the Control Building Sump, which is emptied by sump pumps. Refer to drawing series M-12LF for further information on the floor and equipment drain system.

C.8.6 Isolation and Smoke Removal

The fire barriers will contain a fire within the Fire Area until extinguished. No ventilation ductwork penetrates the fire barriers in this Fire Area. Refer to Section 4.3.7.2 for smoke removal discussion.

C.8.7 Analysis

C.8.7.1 Fire Suppression

A fire in this area will be detected and alarmed by the automatic detection system. In the event that a fire develops, it will be contained by the fire barrier and extinguished by the automatic suppression system. Should the automatic suppression system fail, manual hose streams can be directed through the access opening to extinguish the fire.

C.8.7.2 Safe Shutdown Capability

There are no PFSSD equipment or circuits in this area, therefore fire damage to this area will not prevent safe shutdown. This, coupled with the defense in depth fire protection features and administrative controls for the Fire Area, provides reasonable assurance that 10 CFR Part 20 radiation limits will not be exceeded due to a fire in C-8.

ATTACHMENT B
FIRE HAZARD ANALYSIS
(Page 107 of 250)

Fire Area C-9 (Reference A-1802)

C.9.1 Fire Area Description

North ESF Switchgear Room 3301.

C.9.2 Major Equipment

Electric cable, ESF switchgear, load center unit substations.

C.9.3 Design Features

This Fire Area is separated from all other Fire Areas by fire barrier construction and penetration closure assemblies (structural steel fireproofing, fire doors, fire dampers, and penetration seals) that satisfy at least one of the following criteria:

- Are directly qualified by 3-hour fire endurance testing in accordance with criteria of the applicable controlling standard (ASTM E-119, ASTM E-152, UL-10B, UL-555, or IEEE-634) for the respective barrier assembly protective feature.
- Have been evaluated as providing an equivalent level of protection.
- Have been evaluated as providing protection commensurate with the fire hazards present.

Table C.9.3-1 identifies fire barrier features within the Fire Area that are unique or not directly bounded by fire endurance testing. These features are evaluated within M 663-00017A or an appropriate document referenced within M 663-00017A. These evaluations determined that each unique or unbounded fire barrier feature will prevent fire propagation from one Fire Area to another, and will not adversely impact PFSSD equipment or circuits within an adjacent Fire Area. (Reference 3.1, Section F.5)

Table C.9.3-1
Fire Area C-9, Unique or Unbounded Fire Barrier Features

Unique or Unbounded Feature	M-663-00017A Closure Component Category
Missile door 33012	Fire Door
Penetration seals that exceed the bounding limitations of M-663-00017	Penetration Seal
Structural Steel Fireproofing with unprotected thermal shorts	Structural Steel Fireproofing

Cables which enter the Switchgear Room without terminating there are minimized. (Reference 3.1, Section F.5)

C.9.4 Combustible Loading

The cumulative combustible loading classification for Fire Area C-9 is Low.

ATTACHMENT B
FIRE HAZARD ANALYSIS
(Page 108 of 250)

C.9.5 Fire Protection

This area is provided with a cross-zoned smoke detection system. Detection by either zone will alarm locally and in the Control Room. Activation by both zones will initiate the discharge of the Halon 1301 suppression system installed in this area. If one detection zone is not available, detection by the remaining zone alone will activate the Halon system.

The Halon 1301 system installed is capable of attaining a minimum 5-percent concentration. The system is designed to maintain at least a 5-percent concentration at the level of the highest combustible for a soak time of 10 minutes. An activation station is provided to discharge the system manually. An automatic activation will sound a local alarm, close required ventilation dampers, shut off associated ventilation and/or air-conditioning fan motors, and discharge the system after an adequate time delay for evacuation. (Reference 3.1, Section F.5)

The Halon cylinders and the control panel are located outside the Fire Area. The control panel has a keylock switch to disable system controls during maintenance to prevent any unwanted system actuation. A 100-percent reserve cylinder bank is provided for this system.

Manual-pull fire alarm stations are located near the exit doorway from this area. The pull stations alarm locally and in the Control Room.

Hose stations and portable extinguishers are provided in this Fire Area, as delineated on drawing A-1802. (Reference 3.1, Section F.5)

The area is accessible through two double doorways in the south wall and one double doorway in the north wall.

Three 4-inch floor drains are provided in this area. The drains discharge to the Control Building oily waste sump in Room 3102. The sump is emptied by sump pumps. Refer to drawing series M-12LE for further information on the oily waste drain system.

C.9.6 Isolation and Smoke Removal

The fire barriers will contain a fire within the Fire Area until extinguished. Fire dampers will isolate HVAC openings in the fire barriers. Refer to Section 4.3.7.2 for smoke removal discussion.

C.9.7 Analysis

C.9.7.1 Fire Suppression

A fire in this area will be detected and alarmed by the detection system. Normally, since this is an unoccupied area, both zones of smoke detection would trip during a fire and the Halon system would discharge.

In the event of the failure of the Halon system (identified by Control Room annunciation) the fire can be extinguished manually with the portable extinguishers and/or hose stations.

ATTACHMENT B
FIRE HAZARD ANALYSIS
(Page 109 of 250)

C.9.7.2 Safe Shutdown Capability

As applicable, XX-E-013 identifies electrical PFSSD equipment located within the Fire Area, while E-15000 identifies PFSSD circuits. The detailed PFSSD analysis for the Fire Area is provided in E-1F9910. The analysis demonstrates that a success path of PFSSD equipment, unaffected by a C-9 fire, remains available for achieving and maintaining hot standby and ultimately, transition to cold shutdown, if necessary. Therefore, a fire within Fire Area C-9 will not prevent safe shutdown of the plant.

ATTACHMENT B
FIRE HAZARD ANALYSIS
(Page 110 of 250)

Fire Area C-10 (Reference A-1802)

C.10.1 Fire Area Description

South ESF Switchgear Room 3302.

C.10.2 Major Equipment

Electric cable, ESF switchgear, load center unit substations.

C.10.3 Design Features

This Fire Area is separated from all other Fire Areas by fire barrier construction and penetration closure assemblies (structural steel fireproofing, fire doors, fire dampers, and penetration seals) that satisfy at least one of the following criteria:

- Are directly qualified by 3-hour fire endurance testing in accordance with criteria of the applicable controlling standard (ASTM E-119, ASTM E-152, UL-10B, UL-555, or IEEE-634) for the respective barrier assembly protective feature.
- Have been evaluated as providing an equivalent level of protection.
- Have been evaluated as providing protection commensurate with the fire hazards present.

Table C.10.3-1 identifies fire barrier features within the Fire Area that are unique or not directly bounded by fire endurance testing. These features are evaluated within M 663-00017A or an appropriate document referenced within M 663-00017A. These evaluations determined that each unique or unbounded fire barrier feature will prevent fire propagation from one Fire Area to another, and will not adversely impact PFSSD equipment or circuits within an adjacent Fire Area. (Reference 3.1, Section F.5)

Table C.10.3-1
Fire Area C-10, Unique or Unbounded Fire Barrier Features

Unique or Unbounded Feature	M-663-00017A Closure Component Category
Penetration seals that exceed the bounding limitations of M-663-00017	Penetration Seal
Structural Steel Fireproofing with unprotected thermal shorts	Structural Steel Fireproofing

Cables which enter the Switchgear Room without terminating there are minimized. (Reference 3.1, Section F.5)

C.10.4 Combustible Loading

The cumulative combustible loading classification for Fire Area C-10 is Low.

ATTACHMENT B
FIRE HAZARD ANALYSIS
(Page 111 of 250)

C.10.5 Fire Protection

This area is provided with a cross-zoned smoke detection system. Detection by either zone will alarm locally and in the Control Room. Activation by both zones will initiate the discharge of the Halon 1301 suppression system installed in this area. If one detection zone is not available, detection by the remaining zone alone will activate the Halon system.

The Halon 1301 system installed is capable of attaining a minimum 5-percent concentration. The system is designed to maintain at least a 5-percent concentration at the level of the highest combustible for a soak time of 10 minutes. An activation station is provided to discharge the system manually. An automatic activation will sound a local alarm, close required ventilation dampers, shut off associated ventilation and/or air-conditioning fan motors, and discharge the system after an adequate time delay for evacuation. (Reference 3.1, Section F.5)

The Halon cylinders and the control panel are located outside the Fire Area. The control panel has a keylock switch to disable system controls during maintenance to prevent any unwanted system actuation. A 100-percent reserve cylinder bank is provided for this system.

A manual-pull fire alarm station is located near the south stairwell exit and the north exit from Room 3301. The pull stations alarm locally and in the Control Room.

Hose stations and portable extinguishers are provided in this Fire Area, as delineated on drawing A-1802. (Reference 3.1, Section F.5)

The area is accessible through the southwest stairwell and the two double doorways in the north wall.

Three 4-inch floor drains are provided in this area. The drains discharge to the Control Building oily waste sump in Room 3102. The sump is emptied by sump pumps. Refer to drawing series M-12LE for further information on the oily waste drain system.

C.10.6 Isolation and Smoke Removal

The fire barriers will contain a fire within the Fire Area until extinguished. Fire dampers will isolate HVAC openings in the fire barriers. Refer to Section 4.3.7.2 for smoke removal discussion.

C.10.7 Analysis

C.10.7.1 Fire Suppression

A fire in this area will be detected and alarmed by either zone of detection. Normally, since this is an unoccupied area, both smoke detection zones would trip during the fire and the Halon system would discharge.

In the event of a failure of the Halon system (identified by Control Room annunciation) the fire can be extinguished manually with the portable extinguishers and/or hose stations.

ATTACHMENT B
FIRE HAZARD ANALYSIS
(Page 112 of 250)

C.10.7.2 Safe Shutdown Capability

As applicable, XX-E-013 identifies electrical PFSSD equipment located within the Fire Area, while E-15000 identifies PFSSD circuits. The detailed PFSSD analysis for the Fire Area is provided in E-1F9910. The analysis demonstrates that a success path of PFSSD equipment, unaffected by a C-10 fire, remains available for achieving and maintaining hot standby and ultimately, transition to cold shutdown, if necessary. Therefore, a fire within Fire Area C-10 will not prevent safe shutdown of the plant.

ATTACHMENT B
FIRE HAZARD ANALYSIS
(Page 113 of 250)

Fire Area C-11 (Reference A-1802)

C.11.1 Fire Area Description

South vertical cable chase Room 3305, Control Building. El. 2000 to 2016.

C.11.2 Major Equipment

Electric cable only.

C.11.3 Design Features

This Fire Area is separated from all other Fire Areas by fire barrier construction and penetration closure assemblies (fire doors, fire dampers, and penetration seals) that satisfy at least one of the following criteria:

- Are directly qualified by 3-hour fire endurance testing in accordance with criteria of the applicable controlling standard (ASTM E-119, ASTM E-152, UL-10B, UL-555, or IEEE-634) for the respective barrier assembly protective feature.
- Have been evaluated as providing an equivalent level of protection.
- Have been evaluated as providing protection commensurate with the fire hazards present.

Table C.11.3-1 identifies fire barrier features within the Fire Area that are unique or not directly bounded by fire endurance testing. These features are evaluated within M 663-00017A or an appropriate document referenced within M 663-00017A. These evaluations determined that each unique or unbounded fire barrier feature will prevent fire propagation from one Fire Area to another, and will not adversely impact PFSSD equipment or circuits within an adjacent Fire Area.

Table C.11.3-1
Fire Area C-11, Unique or Unbounded Fire Barrier Features

Unique or Unbounded Feature	M-663-00017A Closure Component Category
Structural Steel Fireproofing with unprotected thermal shorts	Structural Steel Fireproofing

C.11.4 Combustible Loading

The cumulative combustible loading classification for Fire Area C-11 is Moderate. Refer to Section 4.3.5 for further discussion regarding cable chase combustible loading.

ATTACHMENT B
FIRE HAZARD ANALYSIS
(Page 114 of 250)

C.11.5 Fire Protection

Automatic smoke detection is provided in this area. A manual-pull fire alarm station is located at the normal exit from the adjacent area (C-10). Detector or pull station activation results in local fire alarm notification appliance operation and annunciation within the Control Room. The Control Room annunciation of a detection or pull station alarm is point addressable for a quick and easy means to identify the location associated with the device in alarm.

An automatic wet pipe sprinkler system, is installed in this area. The system is equipped with closed head spray nozzles. Backup to the automatic sprinkler system is by portable extinguishers and the manual hose stations located in Fire Area C-10.

Access to the chase is through a 3-hour-rated fire door.

Drainage in this area is by one 4-inch floor drain. This is adequate to handle maximum sprinkler system discharge and hose station discharge. The drain discharges to the 1974' elevation and ultimately to the Control Building sump, which is emptied by sump pumps. Refer to drawing series M-12LF for further information on the floor and equipment drain system.

C.11.6 Isolation and Smoke Removal

The fire barriers will contain a fire within the Fire Area until extinguished. No ventilation ductwork penetrates the fire barriers in this Fire Area. Refer to Section 4.3.7.2 for smoke removal discussion.

C.11.7 Analysis

C.11.7.1 Fire Suppression

A fire in this area will be detected and alarmed by the automatic detection system. In the event that a fire develops, it will be contained by the fire barrier and extinguished by the automatic suppression system. Should the automatic suppression system fail, manual hose streams can be directed through the access opening to extinguish the fire.

C.11.7.2 Safe Shutdown Capability

As applicable, XX-E-013 identifies electrical PFSSD equipment located within the Fire Area, while E-15000 identifies PFSSD circuits. The detailed PFSSD analysis for the Fire Area is provided in E-1F9910. The analysis demonstrates that a success path of PFSSD equipment, unaffected by a C-11 fire, remains available for achieving and maintaining hot standby and ultimately, transition to cold shutdown, if necessary. Therefore, a fire within Fire Area C-11 will not prevent safe shutdown of the plant.

ATTACHMENT B
FIRE HAZARD ANALYSIS
(Page 115 of 250)

Fire Area C-12 (Reference A-1802)

C.12.1 Fire Area Description

North vertical cable chase Room 3306, Control Building. El. 2000 to 2016.

C.12.2 Major Equipment

Electric cable only.

C.12.3 Design Features

This Fire Area is separated from all other Fire Areas by fire barrier construction and penetration closure assemblies (fire doors, fire dampers, and penetration seals) that satisfy at least one of the following criteria:

- Are directly qualified by 3-hour fire endurance testing in accordance with criteria of the applicable controlling standard (ASTM E-119, ASTM E-152, UL-10B, UL-555, or IEEE-634) for the respective barrier assembly protective feature.
- Have been evaluated as providing an equivalent level of protection.
- Have been evaluated as providing protection commensurate with the fire hazards present.

Table C.12.3-1 identifies fire barrier features within the Fire Area that are unique or not directly bounded by fire endurance testing. These features are evaluated within M 663-00017A or an appropriate document referenced within M 663-00017A. These evaluations determined that each unique or unbounded fire barrier feature will prevent fire propagation from one Fire Area to another, and will not adversely impact PFSSD equipment or circuits within an adjacent Fire Area.

Table C.12.3-1
Fire Area C-12, Unique or Unbounded Fire Barrier Features

Unique or Unbounded Feature	M-663-00017A Closure Component Category
Structural Steel Fireproofing with unprotected thermal shorts	Structural Steel Fireproofing

C.12.4 Combustible Loading

The cumulative combustible loading classification for Fire Area C-12 is Moderate. Refer to Section 4.3.5 for further discussion regarding cable chase combustible loading.

ATTACHMENT B
FIRE HAZARD ANALYSIS
(Page 116 of 250)

C.12.5 Fire Protection

Automatic smoke detection is provided in this area. A manual-pull fire alarm station is located at the normal exit from the adjacent area (C-9). Detector or pull station activation results in local fire alarm notification appliance operation and annunciation within the Control Room. The Control Room annunciation of a detection or pull station alarm is point addressable for a quick and easy means to identify the location associated with the device in alarm.

An automatic wet pipe sprinkler system, is installed in this area. The system is equipped with closed head spray nozzles. Backup to the automatic sprinkler system is by portable extinguishers and manual hose stations located in Fire Area C-9.

Access to the chase is through a 3-hour-rated fire door.

Drainage in this area is by one 4-inch floor drain. This is adequate to handle maximum sprinkler system discharge and hose station discharge. The drain discharges to the 1974' elevation and ultimately to the Control Building sump, which is emptied by sump pumps. Refer to drawing series M-12LF for further information on the floor and equipment drain system.

C.12.6 Isolation and Smoke Removal

The fire barriers will contain a fire within the Fire Area until extinguished. No ventilation ductwork penetrates the fire barriers in this Fire Area. Refer to Section 4.3.7.2 for smoke removal discussion.

C.12.7 Analysis

C.12.7.1 Fire Suppression

A fire in this area will be detected and alarmed by the automatic detection system. In the event that a fire develops, it will be contained by the fire barriers and extinguished by the automatic suppression system. Should the automatic suppression system fail, manual hose streams can be directed through the access opening to extinguish the fire.

C.12.7.2 Safe Shutdown Capability

As applicable, XX-E-013 identifies electrical PFSSD equipment located within the Fire Area, while E-15000 identifies PFSSD circuits. The detailed PFSSD analysis for the Fire Area is provided in E-1F9910. The analysis demonstrates that a success path of PFSSD equipment, unaffected by a C-12 fire, remains available for achieving and maintaining hot standby and ultimately, transition to cold shutdown, if necessary. Additionally, PFSSD manual actions for a fire in this area were evaluated as feasible within E-1F9900. Therefore, a fire within Fire Area C-12 will not prevent safe shutdown of the plant.

ATTACHMENT B
FIRE HAZARD ANALYSIS
(Page 117 of 250)

Fire Area C-13 (Reference A-1802)

C.13.1 Fire Area Description

Class IE Air Conditioning Equipment Room No. 1 (Room 3415).

C.13.2 Major Equipment

Class IE electrical AC unit, control room pressurization fan, and control room pressurization system filter adsorber unit

C.13.3 Design Features

This Fire Area is separated from all other Fire Areas by fire barrier construction and penetration closure assemblies (structural steel fireproofing, fire doors, fire dampers, and penetration seals) that satisfy at least one of the following criteria:

- Are directly qualified by 3-hour fire endurance testing in accordance with criteria of the applicable controlling standard (ASTM E-119, ASTM E-152, UL-10B, UL-555, or IEEE-634) for the respective barrier assembly protective feature.
- Have been evaluated as providing an equivalent level of protection.
- Have been evaluated as providing protection commensurate with the fire hazards present.

Table C.13.3-1 identifies fire barrier features within the Fire Area that are unique or not directly bounded by fire endurance testing. These features are evaluated within M 663-00017A or an appropriate document referenced within M 663-00017A. These evaluations determined that each unique or unbounded fire barrier feature will prevent fire propagation from one Fire Area to another, and will not adversely impact PFSSD equipment or circuits within an adjacent Fire Area.

Table C.13.3-1
Fire Area C-13, Unique or Unbounded Fire Barrier Features

Unique or Unbounded Feature	M-663-00017A Closure Component Category
Penetration seals that exceed the bounding limitations of M-663-00017	Penetration Seal
Structural Steel Fireproofing with unprotected thermal shorts	Structural Steel Fireproofing

C.13.4 Combustible Loading

The cumulative combustible loading classification for Fire Area C-13 is Low.

ATTACHMENT B
FIRE HAZARD ANALYSIS
(Page 118 of 250)

C.13.5 Fire Protection

Automatic smoke detection is provided in this area. Manual-pull fire alarm stations are located near the exit doorways from this elevation of the Control Building. Detector or pull station activation results in local fire alarm notification appliance operation and annunciation within the Control Room. The Control Room annunciation of a detection or pull station alarm is point addressable for a quick and easy means to identify the location associated with the device in alarm.

Hose stations and portable extinguishers are provided in the corridors just outside this Fire Area, as indicated on drawing A-1802.

The charcoal adsorber unit is provided with thermistor-type temperature detectors downstream of the charcoal bed, which alarm in the Control Room at high airstream temperature. The charcoal bed is equipped with a hose connection to provide manual water spray protection.

The area is accessible through the door from the adjacent corridor.

Drainage in this area is by two 4-inch floor drains. These drains are adequate to handle hose station discharge. The drains discharges to the Control Building oily waste sump in Room 3102. The sump is emptied by sump pumps. Refer to drawing series M-12LE for further information on the oily waste drain system.

C.13.6 Isolation and Smoke Removal

The fire barriers will contain a fire within the Fire Area until extinguished. Fire dampers will isolate HVAC openings in the fire barriers. Refer to Section 4.3.7.2 for smoke removal discussion.

C.13.7 Analysis

C.13.7.1 Fire Suppression

A fire in this area will be detected and alarmed by the automatic detection system. The fire can be extinguished manually, using hose stations and/or portable extinguishers. Water or fire damage to the safe shutdown equipment will not prevent the safe shutdown of the plant.

A filter fire in the charcoal adsorber unit will be extinguished utilizing the manual spray system.

C.13.7.2 Safe Shutdown Capability

As applicable, XX-E-013 identifies electrical PFSSD equipment located within the Fire Area, while E-15000 identifies PFSSD circuits. The detailed PFSSD analysis for the Fire Area is provided in E-1F9910. The analysis demonstrates that a success path of PFSSD equipment, unaffected by a C-13 fire, remains available for achieving and maintaining hot standby and ultimately, transition to cold shutdown, if necessary.

ATTACHMENT B
FIRE HAZARD ANALYSIS
(Page 119 of 250)

Therefore, a fire within Fire Area C-13 will not prevent safe shutdown of the plant.

ATTACHMENT B
FIRE HAZARD ANALYSIS
(Page 120 of 250)

Fire Area C-14 (Reference A-1802)

C.14.1 Fire Area Description

Class IE Air Conditioning Equipment Room No. 2 (Room 3416).

C.14.2 Major Equipment

Class IE electrical equipment AC unit, control room pressurization fan, and control room pressurization system filter adsorber unit.

C.14.3 Design Features

This Fire Area is separated from all other Fire Areas by fire barrier construction and penetration closure assemblies (structural steel fireproofing, fire doors, fire dampers, and penetration seals) that satisfy at least one of the following criteria:

- Are directly qualified by 3-hour fire endurance testing in accordance with criteria of the applicable controlling standard (ASTM E-119, ASTM E-152, UL-10B, UL-555, or IEEE-634) for the respective barrier assembly protective feature.
- Have been evaluated as providing an equivalent level of protection.
- Have been evaluated as providing protection commensurate with the fire hazards present.

Table C.14.3-1 identifies fire barrier features within the Fire Area that are unique or not directly bounded by fire endurance testing. These features are evaluated within M 663-00017A or an appropriate document referenced within M 663-00017A. These evaluations determined that each unique or unbounded fire barrier feature will prevent fire propagation from one Fire Area to another, and will not adversely impact PFSSD equipment or circuits within an adjacent Fire Area.

Table C.14.3-1
Fire Area C-14, Unique or Unbounded Fire Barrier Features

Unique or Unbounded Feature	M-663-00017A Closure Component Category
Ceramic fiber and sheet metal fire barrier segment	Fire Barrier
Penetration seals that exceed the bounding limitations of M-663-00017	Penetration Seal
Structural Steel Fireproofing with unprotected thermal shorts	Structural Steel Fireproofing

C.14.4 Combustible Loading

The cumulative combustible loading classification for Fire Area C-14 is Low.

ATTACHMENT B
FIRE HAZARD ANALYSIS
(Page 121 of 250)

C.14.5 Fire Protection

Automatic smoke detection is provided in this area. Manual-pull fire alarm stations are located near the exit doorways from this elevation of the Control Building. Detector or pull station activation results in local fire alarm notification appliance operation and annunciation within the Control Room. The Control Room annunciation of a detection or pull station alarm is point addressable for a quick and easy means to identify the location associated with the device in alarm.

Hose stations and portable extinguishers are provided in the corridors just outside this Fire Area, as indicated on drawing A-1802.

The charcoal adsorber unit is provided with thermistor-type temperature detectors downstream of the charcoal bed, which alarm in the control room at high airstream temperature. The charcoal bed is equipped with a hose connection to provide manual water spray protection.

The area is accessible through the door from the adjacent corridor.

Drainage in this area is by one 4-inch floor drain. This drain is adequate to handle hose station discharge. The drain discharges to the Control Building oily waste sump in Room 3102. The sump is emptied by sump pumps. Refer to drawing series M-12LE for further information on the oily waste drain system.

C.14.6 Isolation and Smoke Removal

The fire barriers will contain a fire within the Fire Area until extinguished. Fire dampers will isolate HVAC openings in the fire barriers. Refer to Section 4.3.7.2 for smoke removal discussion.

C.14.7 Analysis

C.14.7.1 Fire Suppression

A fire in this area will be detected and alarmed by the automatic detection system. The fire can be extinguished manually, using hose stations and/or portable extinguishers. Water or fire damage to the safe shutdown equipment will not prevent the safe shutdown of the plant.

A filter fire in the charcoal adsorber unit will be extinguished utilizing the manual spray system.

C.14.7.2 Safe Shutdown Capability

As applicable, XX-E-013 identifies electrical PFSSD equipment located within the Fire Area, while E-15000 identifies PFSSD circuits. The detailed PFSSD analysis for the Fire Area is provided in E-1F9910. The analysis demonstrates that a success path of PFSSD equipment, unaffected by a C-14 fire, remains available for achieving and maintaining hot standby and ultimately, transition to cold shutdown, if necessary.

ATTACHMENT B
FIRE HAZARD ANALYSIS
(Page 122 of 250)

Therefore, a fire within Fire Area C-14 will not prevent safe shutdown of the plant.

ATTACHMENT B
FIRE HAZARD ANALYSIS
(Page 123 of 250)

Fire Area C-15 (Reference A-1802)

C.15.1 Fire Area Description

Battery and Switchboard Rooms (south), Control Building. El. 2016. Rooms 3403, 3404, 3405, 3410, and 3411.

C.15.2 Major Equipment

Switchgear, batteries, battery chargers, panels, inverters, transformers, and electric cable

C.15.3 Design Features

This Fire Area is separated from all other Fire Areas by fire barrier construction and penetration closure assemblies (structural steel fireproofing, fire doors, fire dampers, and penetration seals) that satisfy at least one of the following criteria:

- Are directly qualified by 3-hour fire endurance testing in accordance with criteria of the applicable controlling standard (ASTM E-119, ASTM E-152, UL-10B, UL-555, or IEEE-634) for the respective barrier assembly protective feature.
- Have been evaluated as providing an equivalent level of protection.
- Have been evaluated as providing protection commensurate with the fire hazards present.

Table C.15.3-1 identifies fire barrier features within the Fire Area that are unique or not directly bounded by fire endurance testing. These features are evaluated within M 663-00017A or an appropriate document referenced within M 663-00017A. These evaluations determined that each unique or unbounded fire barrier feature will prevent fire propagation from one Fire Area to another, and will not adversely impact PFSSD equipment or circuits within an adjacent Fire Area. (Reference 3.1, Section F.7)

Table C.15.3-1
Fire Area C-15, Unique or Unbounded Fire Barrier Features

Unique or Unbounded Feature	M-663-00017A Closure Component Category
Penetration seals that exceed the bounding limitations of M-663-00017	Penetration Seal
Structural Steel Fireproofing with unprotected thermal shorts	Structural Steel Fireproofing

The area contains five rooms (including two battery rooms) that are separated by 3-hour fire barrier construction. (Reference 3.1, Section F.7)

C.15.4 Combustible Loading

The cumulative combustible loading classification for Fire Area C-15 is Low.

ATTACHMENT B
FIRE HAZARD ANALYSIS
(Page 124 of 250)

C.15.5 Fire Protection

Except for the Battery Rooms (Rooms 3405 and 3411), a cross-zoned smoke detection system is installed in this area. The Battery Rooms are provided with one smoke detection zone. Manual-pull fire alarm stations are located near the exit doorways from this floor elevation. Detector or pull station activation results in local fire alarm notification appliance operation and annunciation within the Control Room. The Control Room annunciation of a detection or pull station alarm is point addressable for a quick and easy means to identify the location associated with the device in alarm.

Hose stations and portable extinguishers are provided in the corridors just outside this Fire Area, as indicated on drawing A-1802. The hose stations can reach all rooms in this area. (Reference 3.1, Section F.7)

Those areas provided with a cross-zoned detection system are also protected with an automatic Halon 1301 extinguishing system. Activation by both zones will initiate the discharge of the Halon 1301 suppression system installed in this area. If one detection zone is not available, detection by the remaining zone alone will activate the Halon system.

The Halon 1301 system installed is capable of attaining a minimum 5-percent concentration. The system is designed to maintain at least a 5-percent concentration at the level of the highest combustible for a soak time of 10 minutes. An actuation station is provided to discharge the system manually. An automatic activation will sound a local alarm, close required ventilation dampers, shut off associated ventilation and/or air-conditioning fan motors, and discharge the system after an adequate time delay for evacuation.

The Halon cylinders and the control panel are located outside the Fire Area. The control panel has a keylock switch to disable system controls during maintenance to prevent any unwanted system actuation. A 100-percent reserve cylinder bank is provided for this system.

This area is accessible through any of the four doors opening into the access corridor.

Each room within the Fire Area is provided with one 4-inch drain. These drains are adequate to handle hose station discharge. The drains discharge to the Control Building oily waste sump in Room 3102. The sump is emptied by sump pumps. Refer to drawing series M-12LE for further information on the oily waste drain system.

C.15.6 Isolation and Smoke Removal

The fire barriers will contain a fire within the Fire Area until extinguished. Fire dampers will isolate HVAC openings in the fire barriers. Refer to Section 4.3.7.2 for smoke removal discussion.

ATTACHMENT B
FIRE HAZARD ANALYSIS
(Page 125 of 250)

The Battery Rooms in this Fire Area serving each of the safeguards equipment trains in the safe shutdown areas are served by two systems--the Control Building supply air system and the Class IE AC unit. Loss of either or both of these systems will be alarmed in the Control Room via the plant computer. These ventilation systems are capable of maintaining the hydrogen concentration well below two-volume percent. Additionally, each Battery Room is also provided with a hydrogen detector which will alarm in the Control Room whenever the hydrogen concentration exceeds 1 volume percent in any one of the Battery Rooms. (Reference 3.1, Section F.7)

The Control Building supply air system supplies outside air to each of the four DC Switchgear Rooms. This air is exhausted from the Switchgear Rooms through the Battery Rooms by the Control Building exhaust system. The supply air system and the exhaust system provide approximately one air change per hour in each Battery Room. (Reference 3.1, Section F.7)

Battery Rooms 1, 3 and 2, 4 are each served by the Class IE ac system. Each Battery Room is supplied and exhausted separately. The Class IE AC systems each operate in a completely recirculating mode at all times. These systems also serve their respective ESF Switchgear and DC Switchgear Rooms. It has been conservatively calculated that with no fresh air the system can operate for approximately 3 days before the hydrogen concentration reaches 3 volume percent. (Reference 3.1, Section F.7)

C.15.7 Analysis

C.15.7.1 Fire Suppression

A fire in any of the rooms in this area will be detected and alarmed by the smoke detection system. In those areas protected with a Halon 1301 extinguishing system, the system will provide fire suppression of the fire. In the event of a failure of the halon system or in areas not provided with an extinguishing system, the fire can be extinguished manually with the portable extinguishers and/or hose streams.

C.15.7.2 Safe Shutdown Capability

As applicable, XX-E-013 identifies electrical PFSSD equipment located within the Fire Area, while E-15000 identifies PFSSD circuits. The detailed PFSSD analysis for the Fire Area is provided in E-1F9910. The analysis demonstrates that a success path of PFSSD equipment, unaffected by a C-15 fire, remains available for achieving and maintaining hot standby and ultimately, transition to cold shutdown, if necessary. Therefore, a fire within Fire Area C-15 will not prevent safe shutdown of the plant.

ATTACHMENT B
FIRE HAZARD ANALYSIS
(Page 126 of 250)

Fire Area C-16 (Reference A-1802)

C.16.1 Fire Area Description

Battery and Switchboard Rooms (north), Control Building. El. 2016 Rooms 3407, 3408, 3409, 3413, and 3414.

C.16.2 Major Equipment

Switchgear, batteries, battery chargers, panels, inverters, transformers, and electric cable.

C.16.3 Design Features

This Fire Area is separated from all other Fire Areas by fire barrier construction and penetration closure assemblies (structural steel fireproofing, fire doors, fire dampers, and penetration seals) that satisfy at least one of the following criteria:

- Are directly qualified by 3-hour fire endurance testing in accordance with criteria of the applicable controlling standard (ASTM E-119, ASTM E-152, UL-10B, UL-555, or IEEE-634) for the respective barrier assembly protective feature.
- Have been evaluated as providing an equivalent level of protection.
- Have been evaluated as providing protection commensurate with the fire hazards present.

Table C.16.3-1 identifies fire barrier features within the Fire Area that are unique or not directly bounded by fire endurance testing. These features are evaluated within M 663-00017A or an appropriate document referenced within M 663-00017A. These evaluations determined that each unique or unbounded fire barrier feature will prevent fire propagation from one Fire Area to another, and will not adversely impact PFSSD equipment or circuits within an adjacent Fire Area. (Reference 3.1, Section F.7)

Table C.16.3-1
Fire Area C-16, Unique or Unbounded Fire Barrier Features

Unique or Unbounded Feature	M-663-00017A Closure Component Category
Door 34071	Fire Door
Penetration seals that exceed the bounding limitations of M-663-00017	Penetration Seal
Structural Steel Fireproofing with unprotected thermal shorts	Structural Steel Fireproofing

The area contains five rooms (including two battery rooms) that are separated by 3-hour fire barrier construction. (Reference 3.1, Section F.7)

C.16.4 Combustible Loading

The cumulative combustible loading classification for Fire Area C-16 is Low.

ATTACHMENT B
FIRE HAZARD ANALYSIS
(Page 127 of 250)

ATTACHMENT B
FIRE HAZARD ANALYSIS
(Page 128 of 250)

C.16.5 Fire Protection

Except for the Battery Rooms (Rooms 3407 and 3413), a cross-zoned smoke detection system is installed in the area. One zone of smoke detectors is installed in the Battery Rooms. Manual-pull fire alarm stations are located near the exit doorways from this floor elevation. Detector or pull station activation results in local fire alarm notification appliance operation and annunciation within the Control Room. The Control Room annunciation of a detection or pull station alarm is point addressable for a quick and easy means to identify the location associated with the device in alarm.

Hose stations and portable extinguishers are provided in the corridors just outside this fire area, as indicated on drawing A-1802. The hose stations can reach all the various rooms in this area. (Reference 3.1, Section F.7)

Those areas provided with a cross-zoned smoke detection system are also protected with an automatic Halon 1301 extinguishing system. Detection by either zone will alarm locally and in the Control Room. Activation by both zones will initiate the discharge of the Halon 1301 suppression system installed in this area. If one detection zone is not available, detection by the remaining zone alone will activate the Halon system.

The Halon 1301 system installed is capable of attaining a minimum 5-percent concentration. The system is designed to maintain at least a 5-percent concentration at the level of the highest combustible for a soak time of 10 minutes. An actuation station is provided to discharge the system manually. An automatic activation will sound a local alarm, close required ventilation dampers, shut off associated ventilation and/or air-conditioning fan motors, and discharge the system after an adequate time delay for evacuation.

The Halon cylinders and the control panel are located outside the Fire Area. The control panel has a keylock switch to disable system controls during maintenance to prevent any unwanted system actuation. A 100-percent reserve cylinder bank is provided for this system.

This area is accessible through any of the four doors opening into the access corridor.

Each room within the Fire Area is provided with one 4-inch drain. These drains are adequate to handle hose station discharge. The drains discharge to the Control Building oily waste sump in Room 3102. The sump is emptied by sump pumps. Refer to drawing series M-12LE for further information on the oily waste drain system.

C.16.6 Isolation and Smoke Removal

The fire barriers will contain a fire within the Fire Area until extinguished. Fire dampers will isolate HVAC openings in the fire barriers. Refer to Section 4.3.7.2 for smoke removal discussion.

The Battery Rooms in this Fire Area serving each of the safeguards equipment trains in the safe shutdown areas are served by two systems--the Control Building supply air system and the Class IE AC unit. Loss of either or both of these systems will be alarmed in the Control Room via the plant computer. These ventilation systems are capable of maintaining the hydrogen concentration well below two-volume percent. Additionally,

each Battery Room is also provided with a hydrogen detector which will alarm in the Control Room whenever the hydrogen concentration exceeds 1 volume percent in any one of the Battery Rooms. (Reference 3.1, Section F.7)

The Control Building supply air system supplies outside air to each of the four DC Switchgear Rooms. This air is exhausted from the Switchgear Rooms through the Battery Rooms by the control Building exhaust system. The supply air system and the exhaust system provide approximately 1 air change per hour in each Battery Room. (Reference 3.1, Section F.7)

Battery Rooms 1, 3 and 2, 4 are each served by the Class IE AC system. Each Battery Room is supplied and exhausted separately. The Class IE ac systems each operate in a completely recirculating mode at all times. These systems also serve their respective ESF Switchgear and DC Switchgear Rooms. It has been conservatively calculated that with no fresh air the system can operate for approximately 3 days before the hydrogen concentration reaches 3 volume percent. (Reference 3.1, Section F.7)

C.16.7 Analysis

C.16.7.1 Fire Suppression

A fire in any of the rooms in this area will be detected and alarmed by the smoke detection system. In those areas protected with a Halon 1301 extinguishing system, the system will provide fire suppression of the fire. In the event of a failure of the Halon system or in areas not provided with an extinguishing system, the fire can be extinguished manually with the portable extinguishers and/or hose streams.

C.16.7.2 Safe Shutdown Capability

As applicable, XX-E-013 identifies electrical PFSSD equipment located within the Fire Area, while E-15000 identifies PFSSD circuits. The detailed PFSSD analysis for the Fire Area is provided in E-1F9910. The analysis demonstrates that a success path of PFSSD equipment, unaffected by a C-16 fire, remains available for achieving and maintaining hot standby and ultimately, transition to cold shutdown, if necessary. Therefore, a fire within Fire Area C-16 will not prevent safe shutdown of the plant.

ATTACHMENT B
FIRE HAZARD ANALYSIS
(Page 130 of 250)

Fire Area C-17 (Reference A-1802)

C.17.1 Fire Area Description

South Vertical Cable Chase (Room 3418), Control Building El. 2016 to 2032.

C.17.2 Major Equipment

Electric cable only

C.17.3 Design Features

This Fire Area is separated from all other Fire Areas by fire barrier construction and penetration closure assemblies (fire doors, fire dampers, and penetration seals) that satisfy at least one of the following criteria:

- Are directly qualified by 3-hour fire endurance testing in accordance with criteria of the applicable controlling standard (ASTM E-119, ASTM E-152, UL-10B, UL-555, or IEEE-634) for the respective barrier assembly protective feature.
- Have been evaluated as providing an equivalent level of protection.
- Have been evaluated as providing protection commensurate with the fire hazards present.

Table C.17.3-1 identifies fire barrier features within the Fire Area that are unique or not directly bounded by fire endurance testing. These features are evaluated within M 663-00017A or an appropriate document referenced within M 663-00017A. These evaluations determined that each unique or unbounded fire barrier feature will prevent fire propagation from one Fire Area to another, and will not adversely impact PFSSD equipment or circuits within an adjacent Fire Area.

Table C.17.3-1
Fire Area C-17, Unique or Unbounded Fire Barrier Features

Unique or Unbounded Feature	M-663-00017A Closure Component Category
Structural Steel Fireproofing with unprotected thermal shorts	Structural Steel Fireproofing

C.17.4 Combustible Loading

The cumulative combustible loading classification for Fire Area C-17 is Moderate. Refer to Section 4.3.5 for further discussion regarding cable chase combustible loading.

ATTACHMENT B
FIRE HAZARD ANALYSIS
(Page 131 of 250)

C.17.5 Fire Protection

Automatic smoke detection is provided in this area. A manual-pull fire alarm station is located at the normal exit from this floor elevation. Detector or pull station activation results in local fire alarm notification appliance operation and annunciation within the Control Room. The Control Room annunciation of a detection or pull station alarm is point addressable for a quick and easy means to identify the location associated with the device in alarm.

An automatic wet pipe sprinkler system is installed in this area. The system is equipped with closed head spray nozzles. Backup to the automatic sprinkler system is by portable extinguishers and manual hose stations located in the access corridor (3401) at this elevation.

Access to the chase is through a 3-hour-rated fire door.

Drainage in this area is by one 4-inch floor drain. This is adequate to handle maximum sprinkler system discharge and hose station discharge. The drain discharges to the 1974' elevation and ultimately to the Control Building Sump, which is emptied by sump pumps. Refer to drawing series M-12LF for further information on the floor and equipment drain system.

C.17.6 Isolation and Smoke Removal

The fire barriers will contain a fire within the Fire Area until extinguished. No ventilation ductwork penetrates the fire barriers in this Fire Area. Refer to Section 4.3.7.2 for smoke removal discussion.

C.17.7 Analysis

C.17.7.1 Fire Suppression

A fire in this area will be detected and alarmed by the automatic detection system. In the event that a fire develops, it will be contained by the fire barriers and extinguished by the automatic suppression system. Should the automatic suppression system fail, manual hose streams can be directed through the access opening to extinguish the fire.

C.17.7.2 Safe Shutdown Capability

As applicable, XX-E-013 identifies electrical PFSSD equipment located within the Fire Area, while E-15000 identifies PFSSD circuits. The detailed PFSSD analysis for the Fire Area is provided in E-1F9910. The analysis demonstrates that a success path of PFSSD equipment, unaffected by a C-17 fire, remains available for achieving and maintaining hot standby and ultimately, transition to cold shutdown, if necessary. Additionally, PFSSD manual actions for a fire in this area were evaluated as feasible within E-1F9900. Therefore, a fire within Fire Area C-17 will not prevent safe shutdown of the plant.

ATTACHMENT B
FIRE HAZARD ANALYSIS
(Page 132 of 250)

Fire Area C-18 (Reference A-1802)

C.18.1 Fire Area Description

North Vertical Cable Chase (Room 3419), Control Building El. 2016 to 2032.

C.18.2 Major Equipment

Electric cable only

C.18.3 Design Features

This Fire Area is separated from all other Fire Areas by fire barrier construction and penetration closure assemblies (fire doors, fire dampers, and penetration seals) that satisfy at least one of the following criteria:

- Are directly qualified by 3-hour fire endurance testing in accordance with criteria of the applicable controlling standard (ASTM E-119, ASTM E-152, UL-10B, UL-555, or IEEE-634) for the respective barrier assembly protective feature.
- Have been evaluated as providing an equivalent level of protection.
- Have been evaluated as providing protection commensurate with the fire hazards present.

Table C.18.3-1 identifies fire barrier features within the Fire Area that are unique or not directly bounded by fire endurance testing. These features are evaluated within M 663-00017A or an appropriate document referenced within M 663-00017A. These evaluations determined that each unique or unbounded fire barrier feature will prevent fire propagation from one Fire Area to another, and will not adversely impact PFSSD equipment or circuits within an adjacent Fire Area.

Table C.18.3-1
Fire Area C-18, Unique or Unbounded Fire Barrier Features

Unique or Unbounded Feature	M-663-00017A Closure Component Category
Structural Steel Fireproofing with unprotected thermal shorts	Structural Steel Fireproofing

C.18.4 Combustible Loading

The cumulative combustible loading classification for Fire Area C-18 is High. Refer to Section 4.3.5 for further discussion regarding cable chase combustible loading.

ATTACHMENT B
FIRE HAZARD ANALYSIS
(Page 133 of 250)

C.18.5 Fire Protection

Automatic smoke detection is provided in this area. A manual-pull fire alarm station is located at the normal exit from this floor elevation. Detector or pull station activation results in local fire alarm notification appliance operation and annunciation within the Control Room. The Control Room annunciation of a detection or pull station alarm is point addressable for a quick and easy means to identify the location associated with the device in alarm.

An automatic wet pipe sprinkler system is installed in this area. The system is equipped with closed head spray nozzles. Backup to the automatic sprinkler system is by portable extinguishers and manual hose stations located in the access corridor (3401) at this elevation.

Access to the chase is through a 3-hour-rated door.

Drainage in this area is by one 4-inch floor drain. This is adequate to handle maximum sprinkler system discharge and hose station discharge. The drain discharges to the 1974' elevation and ultimately to the Control Building Sump, which is emptied by sump pumps. Refer to drawing series M-12LF for further information on the floor and equipment drain system.

C.18.6 Isolation and Smoke Removal

The fire barriers will contain a fire within the Fire Area until extinguished. No ventilation ductwork penetrates the fire barriers in this Fire Area. Refer to Section 4.3.7.2 for smoke removal discussion.

C.18.7 Analysis

C.18.7.1 Fire Suppression

A fire in this area will be detected and alarmed by the automatic detection system. In the event that a fire develops, it will be contained by the fire barriers and extinguished by the automatic suppression system. Should the automatic suppression system fail, manual hose streams can be directed through the access opening to extinguish the fire.

C.18.7.2 Safe Shutdown Capability

As applicable, XX-E-013 identifies electrical PFSSD equipment located within the Fire Area, while E-15000 identifies PFSSD circuits. The detailed PFSSD analysis for the Fire Area is provided in E-1F9910. The analysis demonstrates that a success path of PFSSD equipment, unaffected by a C-18 fire, remains available for achieving and maintaining hot standby and ultimately, transition to cold shutdown, if necessary. Additionally, PFSSD manual actions for a fire in this area were evaluated as feasible within E-1F9900. Therefore, a fire within Fire Area C-18 will not prevent safe shutdown of the plant.

ATTACHMENT B
FIRE HAZARD ANALYSIS
(Page 134 of 250)

Fire Area C-19 (Reference A-1802)

C.19.1 Fire Area Description

Cable Chase at column line CA-C3, Control Building El. 2016 to 2032.

C.19.2 Major Equipment

Electric cable only.

C.19.3 Design Features

This Fire Area is separated from all other Fire Areas by fire barrier construction and penetration closure assemblies (structural steel fireproofing, fire door and penetration seals) that are directly qualified by 3-hour fire endurance testing in accordance with criteria of the applicable controlling standard (ASTM E-119, ASTM E-152, UL-10B, UL-555, or IEEE-634) for the respective barrier assembly protective feature.

C.19.4 Combustible Loading

The cumulative combustible loading classification for Fire Area C-19 is High. Refer to Section 4.3.5 for further discussion regarding cable chase combustible loading.

C.19.5 Fire Protection

Automatic smoke detection is provided in this area. A manual-pull fire alarm station is located at the normal exit from this floor elevation. Detector or pull station activation results in local fire alarm notification appliance operation and annunciation within the Control Room. The Control Room annunciation of a detection or pull station alarm is point addressable for a quick and easy means to identify the location associated with the device in alarm.

An automatic wet pipe sprinkler system is installed in this area. The system is equipped with closed head spray nozzles. Backup to the automatic sprinkler system is by portable extinguishers and manual hose stations located in the access corridor (3401) at this elevation.

Access to the chase is through a 3-hour-rated door.

Drainage in this area is by one 4-inch floor drain. This is adequate to handle maximum sprinkler system discharge and hose station discharge. The drain discharges to the 1974' elevation and ultimately to the Control Building Sump, which is emptied by sump pumps. Refer to drawing series M-12LF for further information on the floor and equipment drain system.

C.19.6 Isolation and Smoke Removal

The fire barriers will contain a fire within the Fire Area until extinguished. No ventilation ductwork penetrates the fire barriers in this Fire Area. Refer to Section 4.3.7.2 for smoke removal discussion.

ATTACHMENT B
FIRE HAZARD ANALYSIS
(Page 135 of 250)

C.19.7 Analysis

C.19.7.1 Fire Suppression

A fire in this area will be detected and alarmed by the automatic detection system. In the event that a fire develops, it will be contained by the fire barriers and extinguished by the automatic suppression system. Should the automatic suppression system fail, manual hose streams can be directed through the access opening to extinguish the fire.

C.19.7.2 Safe Shutdown Capability

As applicable, XX-E-013 identifies electrical PFSSD equipment located within the Fire Area, while E-15000 identifies PFSSD circuits. The detailed PFSSD analysis for the Fire Area is provided in E-1F9910. The analysis demonstrates that a success path of PFSSD equipment, unaffected by a C-19 fire, remains available for achieving and maintaining hot standby and ultimately, transition to cold shutdown, if necessary. Therefore, a fire within Fire Area C-19 will not prevent safe shutdown of the plant.

ATTACHMENT B
FIRE HAZARD ANALYSIS
(Page 136 of 250)

Fire Area C-20 (Reference A-1802)

C.20.1 Fire Area Description

Cable Chase at column line C-6, Control Building El. 2016 to 2032.

C.20.2 Major Equipment

Electric cable only.

C.20.3 Design Features

This Fire Area is separated from all other Fire Areas by fire barrier construction and penetration closure assemblies (fire doors, fire dampers, and penetration seals) that satisfy at least one of the following criteria:

- Are directly qualified by 3-hour fire endurance testing in accordance with criteria of the applicable controlling standard (ASTM E-119, ASTM E-152, UL-10B, UL-555, or IEEE-634) for the respective barrier assembly protective feature.
- Have been evaluated as providing an equivalent level of protection.
- Have been evaluated as providing protection commensurate with the fire hazards present.

Table C.20.3-1 identifies fire barrier features within the Fire Area that are unique or not directly bounded by fire endurance testing. These features are evaluated within M 663-00017A or an appropriate document referenced within M 663-00017A. These evaluations determined that each unique or unbounded fire barrier feature will prevent fire propagation from one Fire Area to another, and will not adversely impact PFSSD equipment or circuits within an adjacent Fire Area.

Table C.20.3-1
Fire Area C-20, Unique or Unbounded Fire Barrier Features

Unique or Unbounded Feature	M-663-00017A Closure Component Category
Structural Steel Fireproofing with unprotected thermal shorts	Structural Steel Fireproofing

C.20.4 Combustible Loading

The cumulative combustible loading classification for Fire Area C-20 is High. Refer to Section 4.3.5 for further discussion regarding cable chase combustible loading.

ATTACHMENT B
FIRE HAZARD ANALYSIS
(Page 137 of 250)

C.20.5 Fire Protection

Automatic smoke detection is provided in this area. A manual-pull fire alarm station is located at the normal exit from this floor elevation. Detector or pull station activation results in local fire alarm notification appliance operation and annunciation within the Control Room. The Control Room annunciation of a detection or pull station alarm is point addressable for a quick and easy means to identify the location associated with the device in alarm.

An automatic wet pipe sprinkler system is installed in this area. The system is equipped with closed head spray nozzles. Backup to the automatic sprinkler system is by portable extinguishers and manual hose stations located in the access corridor (3401) at this elevation.

Access to the chase is through a 3-hour-rated fire door.

Drainage in this area is by one 4-inch floor drain. This is adequate to handle maximum sprinkler system discharge and hose station discharge. The drain discharges to the 1974' elevation and ultimately to the Control Building Sump, which is emptied by sump pumps. Refer to drawing series M-12LF for further information on the floor and equipment drain system.

C.20.6 Isolation and Smoke Removal

The fire barriers will contain a fire within the Fire Area until extinguished. No ventilation ductwork penetrates the fire barriers in this Fire Area. Refer to Section 4.3.7.2 for smoke removal discussion.

C.20.7 Analysis

C.20.7.1 Fire Suppression

A fire in this area will be detected and alarmed by the automatic detection system. In the event that a fire develops, it will be contained by the fire barriers and extinguished by the automatic suppression system. Should the automatic suppression system fail, manual hose streams can be directed through the access opening to extinguish the fire.

C.20.7.2 Safe Shutdown Capability

As applicable, XX-E-013 identifies electrical PFSSD equipment located within the Fire Area, while E-15000 identifies PFSSD circuits. The detailed PFSSD analysis for the Fire Area is provided in E-1F9910. The analysis demonstrates that a success path of PFSSD equipment, unaffected by a C-20 fire, remains available for achieving and maintaining hot standby and ultimately, transition to cold shutdown, if necessary. Therefore, a fire within Fire Area C-20 will not prevent safe shutdown of the plant.

ATTACHMENT B
FIRE HAZARD ANALYSIS
(Page 138 of 250)

Fire Area C-21 (Reference A-1803)

C.21.1 Fire Area Description

Lower Cable Spreading Room 3501.

C.21.2 Major Equipment

Electric cable.

C.21.3 Design Features

This Fire Area is separated from all other Fire Areas by fire barrier construction and penetration closure assemblies (structural steel fireproofing, fire doors, fire dampers, and penetration seals) that satisfy at least one of the following criteria:

- Are directly qualified by 3-hour fire endurance testing in accordance with criteria of the applicable controlling standard (ASTM E-119, ASTM E-152, UL-10B, UL-555, or IEEE-634) for the respective barrier assembly protective feature.
- Have been evaluated as providing an equivalent level of protection.
- Have been evaluated as providing protection commensurate with the fire hazards present.

Table C.21.3-1 identifies fire barrier features within the Fire Area that are unique or not directly bounded by fire endurance testing. These features are evaluated within M 663-00017A or an appropriate document referenced within M 663-00017A. These evaluations determined that each unique or unbounded fire barrier feature will prevent fire propagation from one Fire Area to another, and will not adversely impact PFSSD equipment or circuits within an adjacent Fire Area. (Reference 3.1, Section F.3.a)(3))

Table C.21.3-1
Fire Area C-21, Unique or Unbounded Fire Barrier Features

Unique or Unbounded Feature	M-663-00017A Closure Component Category
Cable trenches	Fire Barrier
Door 32015	Fire Door
Missile door 35021	Fire Door
Penetration seals that exceed the bounding limitations of M-663-00017	Penetration Seal
Structural Steel Fireproofing with unprotected thermal shorts	Structural Steel Fireproofing

Stairwell C-1 is separated from this area by fire rated barriers.

C.21.4 Combustible Loading

The cumulative combustible loading classification for Fire Area C-21 is Low.

ATTACHMENT B
FIRE HAZARD ANALYSIS
(Page 139 of 250)

C.21.5 Fire Protection

Automatic smoke detection is provided in this area. Manual-pull fire alarm stations are located near the exit doorways from this area. Detector or pull station activation results in local fire alarm notification appliance operation and annunciation within the Control Room. The Control Room annunciation of a detection or pull station alarm is point addressable for a quick and easy means to identify the location associated with the device in alarm.

This area is provided with partial coverage automatic preaction sprinkler system installed at the ceiling. Location of the closed sprinkler heads considers cable tray sizing and arrangement. Cables are designed to allow wetting down with suppression water without electrical faulting. (Reference 3.1, Section F.3.a)(1))

Hose stations and portable extinguishers are provided in this fire area for backup protection, as indicated on drawing A-1803. (Reference 3.1, Section F.3.a)(2))

This area is accessible from the stairway at the south end and the Communications Corridor at the north end of the area. These entrances to the area are remote and separate. Generally, aisle separation between tray stacks is 3 feet wide by 7 feet high. (Reference 3.1, Section F.3.a)(4) and F.3.a)(5))

Adequate floor drainage capacity is provided in this area to remove sprinkler system and hose station discharge without appreciable accumulation. Specifically, four 6-inch drains are provided throughout this Fire Area. The floor drains are piped to the Control Building oily waste sump in Room 3102. The sump is emptied by sump pumps. Refer to drawing series M-12LE for further information on the oily waste drain system.

C.21.6 Isolation and Smoke Removal

The fire barriers will contain a fire within the Fire Area until extinguished. Fire dampers will isolate HVAC openings in the fire barriers. Refer to Section 4.3.7.2 for smoke removal discussion.

C.21.7 Analysis

C.21.7.1 Fire Suppression

A fire in this area will be detected and alarmed by the automatic detection system. Detector actuation will also open the sprinkler system deluge valve, thus charging the system piping. In the event that a fire occurs, the automatic sprinkler system will discharge and suppress the fire. Should the automatic system fail to operate (identified by Control Room annunciation), or fail to completely extinguish the fire, it would be extinguished by utilizing the manual hose stations.

ATTACHMENT B
FIRE HAZARD ANALYSIS
(Page 140 of 250)

C.21.7.2 Safe Shutdown Capability

As applicable, XX-E-013 identifies electrical PFSSD equipment located within the Fire Area, while E-15000 identifies PFSSD circuits. The detailed PFSSD analysis for the Fire Area is provided in E-1F9910. The analysis demonstrates that a success path of PFSSD equipment, unaffected by a C-21 fire, remains available for achieving and maintaining hot standby and ultimately, transition to cold shutdown, if necessary. Additionally, PFSSD manual actions for a fire in this area were evaluated as feasible within E-1F9900. Therefore, a fire within Fire Area C-21 will not prevent safe shutdown of the plant.

ATTACHMENT B
FIRE HAZARD ANALYSIS
(Page 141 of 250)

Fire Area C-22 (Reference A-1804)

C.22.1 Fire Area Description

Upper Cable Spreading Room 3801.

C.22.2 Major Equipment

Electric cable.

C.22.3 Design Features

This Fire Area is separated from all other Fire Areas by fire barrier construction and penetration closure assemblies (structural steel fireproofing, fire doors, fire dampers, and penetration seals) that satisfy at least one of the following criteria:

- Are directly qualified by 3-hour fire endurance testing in accordance with criteria of the applicable controlling standard (ASTM E-119, ASTM E-152, UL-10B, UL-555, or IEEE-634) for the respective barrier assembly protective feature.
- Have been evaluated as providing an equivalent level of protection.
- Have been evaluated as providing protection commensurate with the fire hazards present.

Table C.22.3-1 identifies fire barrier features within the Fire Area that are unique or not directly bounded by fire endurance testing. These features are evaluated within M 663-00017A or an appropriate document referenced within M 663-00017A. These evaluations determined that each unique or unbounded fire barrier feature will prevent fire propagation from one Fire Area to another, and will not adversely impact PFSSD equipment or circuits within an adjacent Fire Area. (Reference 3.1, Section F.3.a)(3))

Table C.22.3-1
Fire Area C-22, Unique or Unbounded Fire Barrier Features

Unique or Unbounded Feature	M-663-00017A Closure Component Category
Missile door 38011	Fire door
Structural Steel Fireproofing with unprotected thermal shorts	Structural Steel Fireproofing

The ceiling is the roof of the control building and is not rated. It is however constructed of concrete with built up Class A roofing. In addition, the structural steel supporting the roof is protected with 3-hour fire proofing material. Therefore, building structural integrity is maintained. (Reference 3.1, Section F.3.a)(3))

Stairwell C-1 is separated from this area by fire rated barriers.

Floor penetrations in this area are provided with raised sleeves or curbs, and all penetrations have watertight seals to prevent water damage in the Control Room below during fire-fighting operations in this area.

ATTACHMENT B
FIRE HAZARD ANALYSIS
(Page 142 of 250)

C.22.4 Combustible Loading

The cumulative combustible loading classification for Fire Area C-22 is Low.

C.22.5 Fire Protection

Automatic smoke detection is provided in this area. Manual-pull fire alarm stations are located near the exit doorways from this area. Detector or pull station activation results in local fire alarm notification appliance operation and annunciation within the Control Room. The Control Room annunciation of a detection or pull station alarm is point addressable for a quick and easy means to identify the location associated with the device in alarm.

This area is provided with partial coverage automatic preaction sprinkler system installed at the ceiling. Location of the closed sprinkler heads considers cable tray sizing and arrangement. Cables are designed to allow wetting down with suppression water without electrical faulting. (Reference 3.1, Section F.3.a)(1))

Hose stations and portable extinguishers are provided in this fire area for backup protection, as indicated on drawing A-1804. (Reference 3.1, Section F.3.a)(2))

This area is accessible from the stairway at the south end and the Communications Corridor at the north end of the area. These entrances to the area are remote and separate. Generally, aisle separation between tray stacks is 3 feet wide by 7 feet high. (Reference 3.1, Section F.3.a)(4) and F.3.a)(5))

Adequate floor drainage capacity is provided in this area to remove sprinkler system and hose station discharge without appreciable accumulation. Specifically, four 6-inch drains are provided throughout this Fire Area. The floor drains are piped to the Control Building oily waste sump in Room 3102. The sump is emptied by sump pumps. Refer to drawing series M-12LE for further information on the oily waste drain system.

C.22.6 Isolation and Smoke Removal

The fire barriers will contain a fire within the Fire Area until extinguished. Fire dampers will isolate HVAC openings in the fire barriers. Refer to Section 4.3.7.2 for smoke removal discussion.

C.22.7 Analysis

C.22.7.1 Fire Suppression

A fire in this area will be detected and alarmed by the automatic detection system. Detector actuation will also open the sprinkler system deluge valve, thus charging the system piping. In the event that a fire occurs, the automatic sprinkler system will discharge and suppress the fire. Should the automatic system fail to operate (identified by Control Room annunciation), or fail to completely extinguish the fire, it would be extinguished by utilizing the manual hose stations.

ATTACHMENT B
FIRE HAZARD ANALYSIS
(Page 143 of 250)

C.22.7.2 Safe Shutdown Capability

As applicable, XX-E-013 identifies electrical PFSSD equipment located within the Fire Area, while E-15000 identifies PFSSD circuits. The detailed PFSSD analysis for the Fire Area is provided in E-1F9910. The analysis demonstrates that a success path of PFSSD equipment, unaffected by a C-22 fire, remains available for achieving and maintaining hot standby and ultimately, transition to cold shutdown, if necessary. Additionally, PFSSD manual actions for a fire in this area were evaluated as feasible within E-1F9900. Therefore, a fire within Fire Area C-22 will not prevent safe shutdown of the plant.

ATTACHMENT B
FIRE HAZARD ANALYSIS
(Page 144 of 250)

Fire Area C-23 (Reference A-1803)

C.23.1 Fire Area Description

South Vertical Cable Chase (Room 3505), Control Building. El. 2032 to 2047-6.

C.23.2 Major Equipment

Electric cable only.

C.23.3 Design Features

This Fire Area is separated from all other Fire Areas by fire barrier construction and penetration closure assemblies (structural steel fireproofing, fire door, and penetration seals) that satisfy at least one of the following criteria:

- Are directly qualified by 3-hour fire endurance testing in accordance with criteria of the applicable controlling standard (ASTM E-119, ASTM E-152, UL-10B, UL-555, or IEEE-634) for the respective barrier assembly protective feature.
- Have been evaluated as providing an equivalent level of protection.
- Have been evaluated as providing protection commensurate with the fire hazards present.

Table C.23.3-1 identifies fire barrier features within the Fire Area that are unique or not directly bounded by fire endurance testing. These features are evaluated within M 663-00017A or an appropriate document referenced within M 663-00017A. These evaluations determined that each unique or unbounded fire barrier feature will prevent fire propagation from one Fire Area to another, and will not adversely impact PFSSD equipment or circuits within an adjacent Fire Area.

Table C.23.3-1
Fire Area C-23, Unique or Unbounded Fire Barrier Features

Unique or Unbounded Feature	M-663-00017A Closure Component Category
Penetration seals that exceed the bounding limitations of M-663-00017	Penetration Seal
Structural Steel Fireproofing with unprotected thermal shorts	Structural Steel Fireproofing

C.23.4 Combustible Loading

The cumulative combustible loading classification for Fire Area C-23 is Moderate. Refer to Section 4.3.5 for further discussion regarding cable chase combustible loading.

ATTACHMENT B
FIRE HAZARD ANALYSIS
(Page 145 of 250)

C.23.5 Fire Protection

Automatic smoke detection is provided in this area. A manual-pull fire alarm station is located at the exits from the adjacent Room 3501. Detector or pull station activation results in local fire alarm notification appliance operation and annunciation within the Control Room. The Control Room annunciation of a detection or pull station alarm is point addressable for a quick and easy means to identify the location associated with the device in alarm.

An automatic wet pipe sprinkler system, is installed in this area. The system is equipped with closed head spray nozzles. Backup to the automatic sprinkler system is by portable extinguishers and manual hose stations located in Fire Area C-21.

Access to the chase is through a 3-hour-rated door.

Drainage in this area is by one 4-inch floor drain. This is adequate to handle maximum sprinkler system discharge and hose station discharge. The drain discharges to the 1974' elevation and ultimately to the Control Building Sump, which is emptied by sump pumps. Refer to drawing series M-12LF for further information on the floor and equipment drain system.

C.23.6 Isolation and Smoke Removal

The fire barriers will contain a fire within the Fire Area until extinguished. No ventilation ductwork penetrates the fire barriers in this Fire Area. Refer to Section 4.3.7.2 for smoke removal discussion.

C.23.7 Analysis

C.23.7.1 Fire Suppression

A fire in this area will be detected and alarmed by the automatic detection system. In the event that a fire develops, it will be contained by the fire barriers and extinguished by the automatic suppression system. Should the automatic suppression system fail, manual hose streams can be directed through the access opening to extinguish the fire.

C.23.7.2 Safe Shutdown Capability

As applicable, XX-E-013 identifies electrical PFSSD equipment located within the Fire Area, while E-15000 identifies PFSSD circuits. The detailed PFSSD analysis for the Fire Area is provided in E-1F9910. The analysis demonstrates that a success path of PFSSD equipment, unaffected by a C-23 fire, remains available for achieving and maintaining hot standby and ultimately, transition to cold shutdown, if necessary. Additionally, PFSSD manual actions for a fire in this area were evaluated as feasible within E-1F9900. Therefore, a fire within Fire Area C-23 will not prevent safe shutdown of the plant.

ATTACHMENT B
FIRE HAZARD ANALYSIS
(Page 146 of 250)

Fire Area C-24 (Reference A-1803)

C.24.1 Fire Area Description

North Vertical Cable Chase (Room 3504), Control Building. El. 2032 to 2047-6.

C.24.2 Major Equipment

Electric cable only.

C.24.3 Design Features

This Fire Area is separated from all other Fire Areas by fire barrier construction and penetration closure assemblies (fire doors, fire dampers, and penetration seals) that satisfy at least one of the following criteria:

- Are directly qualified by 3-hour fire endurance testing in accordance with criteria of the applicable controlling standard (ASTM E-119, ASTM E-152, UL-10B, UL-555, or IEEE-634) for the respective barrier assembly protective feature.
- Have been evaluated as providing an equivalent level of protection.
- Have been evaluated as providing protection commensurate with the fire hazards present.

Table C.24.3-1 identifies fire barrier features within the Fire Area that are unique or not directly bounded by fire endurance testing. These features are evaluated within M 663-00017A or an appropriate document referenced within M 663-00017A. These evaluations determined that each unique or unbounded fire barrier feature will prevent fire propagation from one Fire Area to another, and will not adversely impact PFSSD equipment or circuits within an adjacent Fire Area.

Table C.24.3-1
Fire Area C-24, Unique or Unbounded Fire Barrier Features

Unique or Unbounded Feature	M-663-00017A Closure Component Category
Structural Steel Fireproofing with unprotected thermal shorts	Structural Steel Fireproofing

C.24.4 Combustible Loading

The cumulative combustible loading classification for Fire Area C-24 is High. Refer to Section 4.3.5 for further discussion regarding cable chase combustible loading.

ATTACHMENT B
FIRE HAZARD ANALYSIS
(Page 147 of 250)

C.24.5 Fire Protection

Automatic smoke detection is provided in this area. A manual-pull fire alarm station is located at the exits from the adjacent Room 3501. Detector or pull station activation results in local fire alarm notification appliance operation and annunciation within the Control Room. The Control Room annunciation of a detection or pull station alarm is point addressable for a quick and easy means to identify the location associated with the device in alarm.

An automatic wet pipe sprinkler system, is installed in this area. The system is equipped with closed head spray nozzles. Backup to the automatic sprinkler system is by portable extinguishers and manual hose stations located in Fire Area C-21.

Access to the chase is through a 3-hour-rated door.

Drainage in this area is by one 4-inch floor drain. This is adequate to handle maximum sprinkler system discharge and hose station discharge. The drain discharges to the 1974' elevation and ultimately to the Control Building Sump, which is emptied by sump pumps. Refer to drawing series M-12LF for further information on the floor and equipment drain system.

C.24.6 Isolation and Smoke Removal

The fire barriers will contain a fire within the Fire Area until extinguished. No ventilation ductwork penetrates the fire barriers in this Fire Area. Refer to Section 4.3.7.2 for smoke removal discussion.

C.24.7 Analysis

C.24.7.1 Fire Suppression

A fire in this area will be detected and alarmed by the automatic detection system. In the event that a fire develops, it will be contained by the fire barriers and extinguished by the automatic suppression system. Should the automatic suppression system fail, manual hose streams can be directed through the access opening to extinguish the fire.

C.24.7.2 Safe Shutdown Capability

As applicable, XX-E-013 identifies electrical PFSSD equipment located within the Fire Area, while E-15000 identifies PFSSD circuits. The detailed PFSSD analysis for the Fire Area is provided in E-1F9910. The analysis demonstrates that a success path of PFSSD equipment, unaffected by a C-24 fire, remains available for achieving and maintaining hot standby and ultimately, transition to cold shutdown, if necessary. Additionally, PFSSD manual actions for a fire in this area were evaluated as feasible within E-1F9900. Therefore, a fire within Fire Area C-24 will not prevent safe shutdown of the plant.

ATTACHMENT B
FIRE HAZARD ANALYSIS
(Page 148 of 250)

Fire Area C-25 (Reference A-1803)

C.25.1 Fire Area Description

Cable Chase at column line CA-C6, Control Building. El. 2032 to 2047-6.

C.25.2 Major Equipment

Electric cable only.

C.25.3 Design Features

This Fire Area is separated from all other Fire Areas by fire barrier construction and penetration closure assemblies (structural steel fireproofing, fire door, fire dampers, and penetration seals) that satisfy at least one of the following criteria:

- Are directly qualified by 3-hour fire endurance testing in accordance with criteria of the applicable controlling standard (ASTM E-119, ASTM E-152, UL-10B, UL-555, or IEEE-634) for the respective barrier assembly protective feature.
- Have been evaluated as providing an equivalent level of protection.
- Have been evaluated as providing protection commensurate with the fire hazards present.

Table C.25.3-1 identifies fire barrier features within the Fire Area that are unique or not directly bounded by fire endurance testing. These features are evaluated within M 663-00017A or an appropriate document referenced within M 663-00017A. These evaluations determined that each unique or unbounded fire barrier feature will prevent fire propagation from one Fire Area to another, and will not adversely impact PFSSD equipment or circuits within an adjacent Fire Area.

Table C.24.3-1
Fire Area C-25, Unique or Unbounded Fire Barrier Features

Unique or Unbounded Feature	M-663-00017A Closure Component Category
Penetration seals that exceed the bounding limitations of M-663-00017	Penetration Seal

C.25.4 Combustible Loading

The cumulative combustible loading classification for Fire Area C-25 is High. Refer to Section 4.3.5 for further discussion regarding cable chase combustible loading.

ATTACHMENT B
FIRE HAZARD ANALYSIS
(Page 149 of 250)

C.25.5 Fire Protection

Automatic smoke detection is provided in this area. A manual-pull fire alarm station is located at the exits from the adjacent Room 3501. Detector or pull station activation results in local fire alarm notification appliance operation and annunciation within the Control Room. The Control Room annunciation of a detection or pull station alarm is point addressable for a quick and easy means to identify the location associated with the device in alarm.

An automatic wet pipe sprinkler system, is installed in this area. The system is equipped with closed head spray nozzles. Backup to the automatic sprinkler system is by portable extinguishers and manual hose stations located in Fire Area C-21.

Access to the chase is through a 3-hour-rated door.

Drainage in this area is by one 4-inch floor drain. This is adequate to handle maximum sprinkler system discharge and hose station discharge. The drain discharges to the 1974' elevation and ultimately to the Control Building Sump, which is emptied by sump pumps. Refer to drawing series M-12LF for further information on the floor and equipment drain system.

C.25.6 Isolation and Smoke Removal

The fire barriers will contain a fire within the Fire Area until extinguished. No ventilation ductwork penetrates the fire barriers in this Fire Area. Refer to Section 4.3.7.2 for smoke removal discussion.

C.25.7 Analysis

C.25.7.1 Fire Suppression

A fire in this area will be detected and alarmed by the automatic detection system. In the event that a fire develops, it will be contained by the fire barriers and extinguished by the automatic suppression system. Should the automatic suppression system fail, manual hose streams can be directed through the access opening to extinguish the fire.

C.25.7.2 Safe Shutdown Capability

As applicable, XX-E-013 identifies electrical PFSSD equipment located within the Fire Area, while E-15000 identifies PFSSD circuits. The detailed PFSSD analysis for the Fire Area is provided in E-1F9910. The analysis demonstrates that a success path of PFSSD equipment, unaffected by a C-25 fire, remains available for achieving and maintaining hot standby and ultimately, transition to cold shutdown, if necessary. Therefore, a fire within Fire Area C-25 will not prevent safe shutdown of the plant.

ATTACHMENT B
FIRE HAZARD ANALYSIS
(Page 150 of 250)

Fire Area C-26 (Reference A-1803)

C.26.1 Fire Area Description

Vertical Cable Chase at column line CA-C3, Control Building El. 2032 to 2047-6.

C.26.2 Major Equipment

Electric cable only.

C.26.3 Design Features

This Fire Area is separated from all other Fire Areas by fire barrier construction and penetration closure assemblies (structural steel fireproofing, fire door, and penetration seals) that are directly qualified by 3-hour fire endurance testing in accordance with criteria of the applicable controlling standard (ASTM E-119, ASTM E-152, UL-10B, UL-555, or IEEE-634) for the respective barrier assembly protective feature.

C.26.4 Combustible Loading

The cumulative combustible loading classification for Fire Area C-26 is High.

C.26.5 Fire Protection

Automatic smoke detection is provided in this area. A manual-pull fire alarm station is located at the exits from the adjacent Room 3501. Detector or pull station activation results in local fire alarm notification appliance operation and annunciation within the Control Room. The Control Room annunciation of a detection or pull station alarm is point addressable for a quick and easy means to identify the location associated with the device in alarm.

An automatic wet pipe sprinkler system, is installed in this area. The system is equipped with closed head spray nozzles. Backup to the automatic sprinkler system is by portable extinguishers and manual hose stations located in Fire Area C-21.

Access to the chase is through a 3-hour-rated door.

Drainage in this area is by one 4-inch floor drain. This is adequate to handle maximum sprinkler system discharge and hose station discharge. The drain discharges to the 1974' elevation and ultimately to the Control Building Sump, which is emptied by sump pumps. Refer to drawing series M-12LF for further information on the floor and equipment drain system.

C.26.6 Isolation and Smoke Removal

The fire barriers will contain a fire within the Fire Area until extinguished. No ventilation ductwork penetrates the fire barriers in this Fire Area. Refer to Section 4.3.7.2 for smoke removal discussion.

ATTACHMENT B
FIRE HAZARD ANALYSIS
(Page 151 of 250)

C.26.7 Analysis

C.26.7.1 Fire Suppression

A fire in this area will be detected and alarmed by the automatic detection system. In the event that a fire develops, it will be contained by the fire barriers and extinguished by the automatic suppression system. Should the automatic suppression system fail, manual hose streams can be directed through the access opening to extinguish the fire.

C.26.7.2 Safe Shutdown Capability

As applicable, XX-E-013 identifies electrical PFSSD equipment located within the Fire Area, while E-15000 identifies PFSSD circuits. The detailed PFSSD analysis for the Fire Area is provided in E-1F9910. The analysis demonstrates that a success path of PFSSD equipment, unaffected by a C-26 fire, remains available for achieving and maintaining hot standby and ultimately, transition to cold shutdown, if necessary. Therefore, a fire within Fire Area C-25 will not prevent safe shutdown of the plant.

ATTACHMENT B
FIRE HAZARD ANALYSIS
(Page 152 of 250)

Fire Area C-27 (Reference A-1804)

C.27.1 Fire Area Description

Control Room area, Rooms 3601, 3603-3606, and 3616.

C.27.2 Major Equipment

Main control board equipment cabinets, electric cable.

C.27.3 Design Features

This Fire Area is separated from all other Fire Areas by fire barrier construction and penetration closure assemblies (structural steel fireproofing, fire doors, fire dampers, and penetration seals) that satisfy at least one of the following criteria:

- Are directly qualified by 3-hour fire endurance testing in accordance with criteria of the applicable controlling standard (ASTM E-119, ASTM E-152, UL-10B, UL-555, or IEEE-634) for the respective barrier assembly protective feature.
- Have been evaluated as providing an equivalent level of protection.
- Have been evaluated as providing protection commensurate with the fire hazards present.

Table C.27.3-1 identifies fire barrier features within the Fire Area that are unique or not directly bounded by fire endurance testing. These features are evaluated within M 663-00017A or an appropriate document referenced within M 663-00017A. These evaluations determined that each unique or unbounded fire barrier feature will prevent fire propagation from one Fire Area to another, and will not adversely impact PFSSD equipment or circuits within an adjacent Fire Area. (Reference 3.1, Section F.2)

All penetration seals are relatively airtight, as demonstrated by periodic Control Room pressurization testing. (Reference 3.1, Section F.2)

Table C.27.3-1
Fire Area C-27, Unique or Unbounded Fire Barrier Features

Unique or Unbounded Feature	M-663-00017A Closure Component Category
Cable trenches	Fire Barrier
Missile door 36042	Fire Door
Penetration seals that exceed the bounding limitations of M-663-00017	Penetration Seal
Structural Steel Fireproofing with unprotected thermal shorts	Structural Steel Fireproofing

The following rooms at this elevation of the Control Building are considered peripheral rooms and are not part of the Control Room. These rooms are separated from this Fire Area by fire rated barriers.

ATTACHMENT B
FIRE HAZARD ANALYSIS
(Page 153 of 250)

a. 3609, SAS room (See Fire Area C-29)

b. 3602, Pantry (See Fire Area C-28)

c. 3607, Toilet (See Fire Area C-28)

d. 3608, Janitor's closet (See Fire Area C-28)

Some electric cable is routed above the suspended ceiling over Room 3601. However, none of these circuits are required for a safe shutdown. The floor of Room 3601 contains nine cable trenches (approximately 3-1/4 inches deep), which continue up the height of the west wall in the Control Room. The trenches are covered by steel plates, and the vertical chases are faced with sheet rock (not rated). Access panels are provided for each chase at several elevations within the Control Room, and the steel covers on the trenches are removable for manual fire-fighting access. The floor of 3605 contains two cable trenches (approximately 3-1/4 inches deep). These two trenches are covered by steel cover plates that are removable for firefighting access.

Electrical cables of redundant safety-related equipment trains are physically separated within the Control Room. Redundant safety-related circuits enter the Control Room from the Upper and Lower Cable Spreading Rooms. Circuits from the Lower Cable Spreading Room, which are in separation groups 1, 3, and 5 enter the control panels and cabinets directly. Circuits from the Upper Cable Spreading Room, which are in separation groups 2, 4, and 6 are routed to the control panels and cabinets through conduit, vertical wall trays, and under floor cable trenches. Within the control panels, safety-related wiring is separated from redundant circuits and protected in accordance with the guidelines of Regulatory Guide 1.75.

C.27.4 Combustible Loading

The cumulative combustible loading classification for Fire Area C-27 is Low.

Internal surfaces of control panels are finished with paint of low flame spread. All cables in these panels meet the vertical flame requirements of ICEA S-19-81 and/or IEEE 383-1974 for flame resistance.

The carpet material used in the control room is 100 percent nylon. This material meets or exceeds the surface flammability requirements per ASTM E84 or CPSC Standard FF1-70, the static propensity rating per ASTM D2679 or AATCC-134, smoke development rating per ASTM E662, and the critical radiant flux rating per ASTM E-648 or NFPA 253.

The suspended acoustical ceiling consists of panels with a maximum flame spread of 25 when tested in accordance with ASTM E 84.

The majority of the paper is stored in steel cabinets, book cases and drawers, which reduces the fire loading.

ATTACHMENT B
FIRE HAZARD ANALYSIS
(Page 154 of 250)

C.27.5 Fire Protection

As delineated in Attachment A. Automatic smoke detectors are installed in each room containing fixed combustibles and in panels, which contain both trains of redundant safety-related conduit, cable, or wire required for safe shutdown. Smoke detection is also provided for the cable trenches in 3601 and the area above the Control Room proper suspended ceiling. (Reference 3.1, Section F.2)

Manual-pull fire alarm stations are located near the exit doorways from this area. Detector or pull station activation results in local fire alarm notification appliance operation and annunciation within the Control Room. The Control Room annunciation of a detection or pull station alarm is point addressable for a quick and easy means to identify the location associated with the device in alarm. (Reference 3.1, Section F.2)

Automatic smoke detection is provided for the outside air intakes to the Control Room ventilation system. This detection is alarmed in the Control Room, and the Control Room ventilation system can be manually isolated. (Reference 3.1, Section F.2)

An automatic Halon 1301 extinguishing system is provided for the nine cable trench/wall chase combinations in the floor and west wall of Room 3601. The system is designed to maintain a minimum 5-percent concentration for approximately 7 minutes by utilizing an extended discharge following the initial release of Halon agent. This design configuration was accepted in SSER 5. (Reference 3.1, Section F.2)

The Halon cylinders and the control panel are located outside the cable trench protected area. The control panel has a keylock switch to disable system controls during maintenance to prevent any unwanted system actuation. A release button is provided on the control panel to discharge the system manually. Automatic activation will sound a local alarm and discharge the system following a brief time delay. One hundred percent capacity reserve cylinders are provided for connection to the system.

Hose stations and portable extinguishers are provided adjacent to the Control Room area, as indicated on drawing A-1804. Hose stations are equipped with Class "C" spray nozzles with rubber bumpers. These hose stations permit coverage of the area above the suspended ceiling. (Reference 3.1, Section F.2)

The area is accessible for manual firefighting from Communications Corridor Room 3611, Southwest Stairwell 3201, and Auxiliary Building Room 1512. Breathing apparatus are available for Control Room operators. (Reference 3.1, Section F.2)

Drainage in this area is by four 4-inch floor drains. This is adequate to handle maximum hose station discharge. The floor drains are piped to the Control Building oily waste sump in Room 3102. The sump is emptied by sump pumps. Refer to drawing series M-12LE for further information on the oily waste drain system.

ATTACHMENT B
FIRE HAZARD ANALYSIS
(Page 155 of 250)

C.27.6 Isolation and Smoke Removal

The fire barriers will contain a fire within the Fire Area until extinguished. Fire dampers will isolate HVAC openings in the fire barriers. Refer to Section 4.3.7.2 for smoke removal discussion. Air packs are provided for operating personnel to permit them to remain in the Control Room when smoke is present.

C.27.7 Analysis

C.27.7.1 Fire Suppression

Personnel access to the Control Room is limited to necessary personnel, and strict administrative controls exist to limit transient combustibles within the Control Room. For these reasons, it is highly improbable that any fire more severe than an electrical fire within a control panel or cabinet could occur.

The fixed paper combustibles are necessary for the safe operation of the plant and are not stored in the immediate vicinity of the panels containing redundant safe shutdown circuits. Nevertheless, exposure fires sufficiently large to destroy any single control panel, before being extinguished, have been postulated. The ability to take the plant to a safe shutdown condition under such a circumstance is addressed in Section C.27.7.2.

The physical separation discussed in Section C.27.3 for redundant cable separation groups prevents an electrically-initiated fire from propagating to the point that it could adversely affect redundant trains. This is based on the limited energy density associated with an electrical fire, the minimum separation distances within any control panel, the physical barriers provided within the panel, and the fire detection and suppression systems provided. Further, since there are no power cables in safety-related control panels, the probability of an electrical fire is low.

Additionally, consistent with the conclusions of NUREG/CR-4527, an internal cabinet fire is not postulated to propagate to an adjacent cabinet when the following are satisfied:

- Cabinet of fire origin is protected by a predominantly noncombustible external shell.
- Adjacent cabinet is protected by a predominantly noncombustible external shell.
- At least a 1” air gap is provided between the cabinet of fire origin and the adjacent cabinet of concern.

The cabinet fire testing documented in NUREG/CR-4527 demonstrated that significant smoke obscuration did not occur until approximately six minutes following cabinet fire ignition.

ATTACHMENT B
FIRE HAZARD ANALYSIS
(Page 156 of 250)

The automatic Halon system will suppress a fire originating in a cable trench. Portable fire extinguishers and hose stations in the foyer to the Control Room and the vestibule to Stairway C-1 provide means of extinguishing any fire that may occur.

C.27.7.2 Safe Shutdown Capability

A detailed study, entitled "SNUPPS Control Room Fire Hazards Analysis," was submitted to the NRC by letter SLNRC 82-046 dated November 15, 1982. That report addressed transient fires originating between the Control Room panels. Based on revised NRC positions, a report, "Fire Protection Review" was submitted to the NRC by letter SLNRC 84-109, dated August 23, 1984. This report provides the response plan necessary to ensure achievement and maintenance of hot standby conditions from outside the Control Room with postulated Control Room fire damage. Modifications to the facility and procedure changes have resulted in enhancements to the original response plan identified in SLNRC 84-109. However, the letter's objective to achieve and maintain hot standby in a systematic, prioritized manner is preserved.

In the event that the Control Room is made uninhabitable by smoke, as a consequence of a fire, and there is no damage to safety-related circuits within the Control Room, the plant can be taken to and controlled in a safe hot standby condition from the auxiliary shutdown panel in the Auxiliary Building. The plant can be taken to a cold shutdown condition from outside the Control Room using the auxiliary shutdown panel and local controls at equipment locations and cabinets containing safety related equipment as described in USAR Section 7.4.3.

If, as a consequence of a fire, there is the potential for damage affecting safety-related circuits within Control Room panels, there are switches and contacts on the train B auxiliary shutdown panel (RP118B) that would be used to isolate Control Room circuits. With control at RP118B and following completion of specific actions at other locations outside the Control Room, the plant can be taken to and maintained at a safe hot standby condition. Refer to USAR Table 7.4-1 for the list of selected instrumentation and controls on RP118B that have the isolation feature. Transition to hot standby as a result of a Control Room fire necessitating Control Room evacuation is procedurally controlled by OFN RP-017.

With the plant in a safe hot standby condition, controls and instrumentation for systems required to take the plant to cold shutdown can be evaluated for operability and cold shutdown activities can be performed from the auxiliary shutdown panels, and locally, as required.

Refer to letter SLNRC 84-109 for further discussion on safe shutdown following a Control Room fire. XX-E-013 identifies electrical PFSSD equipment located within the Fire Area, while E-15000 identifies PFSSD circuits.

ATTACHMENT B
FIRE HAZARD ANALYSIS
(Page 157 of 250)

Fire Area C-28 (Reference A-1804)

C.28.1 Fire Area Description

Service area by Control Room, Rooms 3602, 3607, and 3608.

C.28.2 Major Equipment

None.

C.28.3 Design Features

This Fire Area is separated from all other Fire Areas by fire barrier construction and penetration closure assemblies (structural steel fireproofing, fire doors, fire dampers, and penetration seals) that are directly qualified by 3-hour fire endurance testing in accordance with criteria of the applicable controlling standard (ASTM E-119, ASTM E-152, UL-10B, UL-555, or IEEE-634) for the respective barrier assembly protective feature.

C.28.4 Combustible Loading

The cumulative combustible loading classification for Fire Area C-28 is Low.

C.28.5 Fire Protection

Automatic smoke detection is installed in the janitor's closet Room 3608. Detector or pull station activation results in local fire alarm notification appliance operation and annunciation within the Control Room. The Control Room annunciation of a detection or pull station alarm is point addressable for a quick and easy means to identify the location associated with the device in alarm.

A stand-alone heat detector/door closer system is installed in the pantry, room 3602, which actuates closure of the pantry to Control Room door which is normally in the open position. The heat detector actuates the door closer and a strobe located in the Control Room near the pantry door.

Hose stations and portable extinguishers are provided in the foyers of Fire Area C-27 as indicated on drawing A-1804.

The area is accessible for manual firefighting from Communications Corridor Room 3611, Southwest Stairwell 3201, and Auxiliary Building Room 1512.

A sanitary drain is provided in the floor of the restroom for this area. This is acceptable since manual fire water suppression efforts will be minimal, considering the small footprint of the area.

C.28.6 Isolation and Smoke Removal

The fire barriers will contain a fire within the Fire Area until extinguished. Fire dampers will isolate HVAC openings in the fire barriers. Refer to Section 4.3.7.2 for smoke removal discussion.

ATTACHMENT B
FIRE HAZARD ANALYSIS
(Page 158 of 250)

C.28.7 Analysis

C.28.7.1 Fire Suppression

A fire in this area will be detected and alarmed by the automatic detection system. The fire can be extinguished manually with the portable extinguishers and/or hose station located in the adjacent area. Continuous occupancy of the adjacent Control room ensures a rapid response to a fire in this area.

C.28.7.2 Safe Shutdown Capability

As applicable, XX-E-013 identifies electrical PFSSD equipment located within the Fire Area, while E-15000 identifies PFSSD circuits. The detailed PFSSD analysis for the Fire Area is provided in E-1F9910. The analysis demonstrates that a success path of PFSSD equipment, unaffected by a C-28 fire, remains available for achieving and maintaining hot standby and ultimately, transition to cold shutdown, if necessary. Therefore, a fire within Fire Area C-28 will not prevent safe shutdown of the plant.

ATTACHMENT B
FIRE HAZARD ANALYSIS
(Page 159 of 250)

Fire Area C-29 (Reference A-1804)

C.29.1 Fire Area Description

SAS Room 3609.

C.29.2 Major Equipment

SAS panel.

C.29.3 Design Features

This Fire Area is separated from all other Fire Areas by fire barrier construction and penetration closure assemblies (structural steel fireproofing, fire doors, fire dampers, and penetration seals) that are directly qualified by 3-hour fire endurance testing in accordance with criteria of the applicable controlling standard (ASTM E-119, ASTM E-152, UL-10B, UL-555, or IEEE-634) for the respective barrier assembly protective feature.

C.29.4 Combustible Loading

The cumulative combustible loading classification for Fire Area C-29 is Low.

C.29.5 Fire Protection

Automatic smoke detection is provided in this area. Manual-pull fire alarm stations are located near the exit doorways from the adjacent area. Detector or pull station activation results in local fire alarm notification appliance operation and annunciation within the Control Room. The Control Room annunciation of a detection or pull station alarm is point addressable for a quick and easy means to identify the location associated with the device in alarm.

Hose stations and portable extinguishers are provided in the foyers of Fire Area C-27, as indicated on drawingA-1804.

The area is accessible for manual fire fighting from Communications Corridor Room 3611, Southwest Stairwell 3201, and Auxiliary Building Room 1512.

No drains are provided for this Fire Area, as manual fire water suppression efforts will be minimal, considering the small footprint of the area.

C.29.6 Isolation and Smoke Removal

The fire barriers will contain a fire within the Fire Area until extinguished. Fire dampers will isolate HVAC openings in the fire barriers. Refer to Section 4.3.7.2 for smoke removal discussion.

ATTACHMENT B
FIRE HAZARD ANALYSIS
(Page 160 of 250)

C.29.7 Analysis

C.29.7.1 Fire Suppression

A fire in this area will be detected and alarmed by the automatic detection system. The fire can be extinguished manually with the portable extinguishers and/or hose station located in the adjacent area. Continuous occupancy of the adjacent control room ensures a rapid response to a fire in this area.

C.29.7.2 Safe Shutdown Capability

There are no PFSSD equipment or circuits in this area, therefore fire damage to this area will not prevent safe shutdown.

ATTACHMENT B
FIRE HAZARD ANALYSIS
(Page 161 of 250)

Fire Area C-30 (Reference A-1804)

C.30.1 Fire Area Description

South Vertical Cable Chase (Room 3617), Control Building. El. 2047-6 to 2073-6.

C.30.2 Major Equipment

Electric cable only.

C.30.3 Design Features

This Fire Area is separated from all other Fire Areas by fire barrier construction and penetration closure assemblies (structural steel fireproofing, fire door, and penetration seals) that satisfy at least one of the following criteria:

- Are directly qualified by 3-hour fire endurance testing in accordance with criteria of the applicable controlling standard (ASTM E-119, ASTM E-152, UL-10B, UL-555, or IEEE-634) for the respective barrier assembly protective feature.
- Have been evaluated as providing an equivalent level of protection.
- Have been evaluated as providing protection commensurate with the fire hazards present.

Table C.30.3-1 identifies fire barrier features within the Fire Area that are unique or not directly bounded by fire endurance testing. These features are evaluated within M 663-00017A or an appropriate document referenced within M 663-00017A. These evaluations determined that each unique or unbounded fire barrier feature will prevent fire propagation from one Fire Area to another, and will not adversely impact PFSSD equipment or circuits within an adjacent Fire Area.

Table C.30.3-1
Fire Area C-30, Unique or Unbounded Fire Barrier Features

Unique or Unbounded Feature	M-663-00017A Closure Component Category
Penetration seals that exceed the bounding limitations of M-663-00017	Penetration Seal
Structural Steel Fireproofing with unprotected thermal shorts	Structural Steel Fireproofing

C.30.4 Combustible Loading

The cumulative combustible loading classification for Fire Area C-30 is High. Refer to Section 4.3.5 for further discussion regarding cable chase combustible loading.

ATTACHMENT B
FIRE HAZARD ANALYSIS
(Page 162 of 250)

C.30.5 Fire Protection

Automatic smoke detection is provided in this area. A manual-pull fire alarm station is located at the normal exit from the adjacent area (C-27). Detector or pull station activation results in local fire alarm notification appliance operation and annunciation within the Control Room. The Control Room annunciation of a detection or pull station alarm is point addressable for a quick and easy means to identify the location associated with the device in alarm.

An automatic wet pipe sprinkler system, is installed in this area. The system is equipped with closed head spray nozzles. Backup to the automatic sprinkler system is by portable extinguishers and manual hose stations located in Fire Area C-27 and Stairwell Vestibule 3616.

Access to the chase is through a 3-hour-rated fire door.

Drainage in this area is by one 4-inch floor drain. This is adequate to handle maximum sprinkler system discharge and hose station discharge. The drain discharges to the 1974' elevation and ultimately to the Control Building Sump, which is emptied by sump pumps. Refer to drawing series M-12LF for further information on the floor and equipment drain system.

C.30.6 Isolation and Smoke Removal

The fire barriers will contain a fire within the Fire Area until extinguished. No ventilation ductwork penetrates the fire barriers in this Fire Area. Refer to Section 4.3.7.2 for smoke removal discussion.

C.30.7 Analysis

C.30.7.1 Fire Suppression

A fire in this area will be detected and alarmed by the automatic detection system. In the event that a fire develops, it will be contained by the fire barriers and extinguished by the automatic suppression system. Should the automatic suppression system fail, manual hose streams can be directed through the access opening to extinguish the fire.

C.30.7.2 Safe Shutdown Capability

As applicable, XX-E-013 identifies electrical PFSSD equipment located within the Fire Area, while E-15000 identifies PFSSD circuits. The detailed PFSSD analysis for the Fire Area is provided in E-1F9910. The analysis demonstrates that a success path of PFSSD equipment, unaffected by a C-30 fire, remains available for achieving and maintaining hot standby and ultimately, transition to cold shutdown, if necessary. Additionally, PFSSD manual actions for a fire in this area were evaluated as feasible within E-1F9900. Therefore, a fire within Fire Area C-30 will not prevent safe shutdown of the plant.

ATTACHMENT B
FIRE HAZARD ANALYSIS
(Page 163 of 250)

Fire Area C-31 (Reference A-1804)

C.31.1 Fire Area Description

North Vertical Cable Chase (Room 3618), Control Building. El. 2047-6 to 2073-6.

C.31.2 Major Equipment

Electric cable only.

C.31.3 Design Features

This Fire Area is separated from all other Fire Areas by fire barrier construction and penetration closure assemblies (fire doors, fire dampers, and penetration seals) that satisfy at least one of the following criteria:

- Are directly qualified by 3-hour fire endurance testing in accordance with criteria of the applicable controlling standard (ASTM E-119, ASTM E-152, UL-10B, UL-555, or IEEE-634) for the respective barrier assembly protective feature.
- Have been evaluated as providing an equivalent level of protection.
- Have been evaluated as providing protection commensurate with the fire hazards present.

Table C.31.3-1 identifies fire barrier features within the Fire Area that are unique or not directly bounded by fire endurance testing. These features are evaluated within M 663-00017A or an appropriate document referenced within M 663-00017A. These evaluations determined that each unique or unbounded fire barrier feature will prevent fire propagation from one Fire Area to another, and will not adversely impact PFSSD equipment or circuits within an adjacent Fire Area.

Table C.31.3-1
Fire Area C-31, Unique or Unbounded Fire Barrier Features

Unique or Unbounded Feature	M-663-00017A Closure Component Category
Structural Steel Fireproofing with unprotected thermal shorts	Structural Steel Fireproofing

C.31.4 Combustible Loading

The cumulative combustible loading classification for Fire Area C-31 is Low. Refer to Section 4.3.5 for further discussion regarding cable chase combustible loading.

ATTACHMENT B
FIRE HAZARD ANALYSIS
(Page 164 of 250)

C.31.5 Fire Protection

Automatic smoke detection is provided in this area. A manual-pull fire alarm station is located at the normal exit from the adjacent area (C-27). Detector or pull station activation results in local fire alarm notification appliance operation and annunciation within the Control Room. The Control Room annunciation of a detection or pull station alarm is point addressable for a quick and easy means to identify the location associated with the device in alarm.

An automatic wet pipe sprinkler system, is installed in this area. The system is equipped with closed head spray nozzles. Backup to the automatic sprinkler system is by portable extinguishers and manual hose stations located in Fire Area C-27.

Access to the chase is through a 3-hour-rated door.

Drainage in this area is by one 4-inch floor drain. This is adequate to handle maximum sprinkler system discharge and hose station discharge. The drain discharges to the 1974' elevation and ultimately to the Control Building Sump, which is emptied by sump pumps. Refer to drawing series M-12LF for further information on the floor and equipment drain system.

C.31.6 Isolation and Smoke Removal

The fire barriers will contain a fire within the Fire Area until extinguished. No ventilation ductwork penetrates the fire barriers in this Fire Area. Refer to Section 4.3.7.2 for smoke removal discussion.

C.31.7 Analysis

C.31.7.1 Fire Suppression

A fire in this area will be detected and alarmed by the automatic detection system. In the event that a fire develops, it will be contained by the fire barriers and extinguished by the automatic suppression system. Should the automatic suppression system fail, manual hose streams can be directed through the access opening to extinguish the fire.

C.31.7.2 Safe Shutdown Capability

As applicable, XX-E-013 identifies electrical PFSSD equipment located within the Fire Area, while E-15000 identifies PFSSD circuits. The detailed PFSSD analysis for the Fire Area is provided in E-1F9910. The analysis demonstrates that a success path of PFSSD equipment, unaffected by a C-31 fire, remains available for achieving and maintaining hot standby and ultimately, transition to cold shutdown, if necessary. Therefore, a fire within Fire Area C-31 will not prevent safe shutdown of the plant.

ATTACHMENT B
FIRE HAZARD ANALYSIS
(Page 165 of 250)

Fire Area C-32 (Reference A-1804)

C.32.1 Fire Area Description

Vertical Cable Chase at column line CA-C6, Control Building El. 2047-6 to 2073-6.

C.32.2 Major Equipment

Electric cable only.

C.32.3 Design Features

This Fire Area is separated from all other Fire Areas by fire barrier construction and penetration closure assemblies (structural steel fireproofing, fire door, and penetration seals) that satisfy at least one of the following criteria:

- Are directly qualified by 3-hour fire endurance testing in accordance with criteria of the applicable controlling standard (ASTM E-119, ASTM E-152, UL-10B, UL-555, or IEEE-634) for the respective barrier assembly protective feature.
- Have been evaluated as providing an equivalent level of protection.
- Have been evaluated as providing protection commensurate with the fire hazards present.

Table C.32.3-1 identifies fire barrier features within the Fire Area that are unique or not directly bounded by fire endurance testing. These features are evaluated within M 663-00017A or an appropriate document referenced within M 663-00017A. These evaluations determined that each unique or unbounded fire barrier feature will prevent fire propagation from one Fire Area to another, and will not adversely impact PFSSD equipment or circuits within an adjacent Fire Area.

Table C.32.3-1
Fire Area C-32, Unique or Unbounded Fire Barrier Features

Unique or Unbounded Feature	M-663-00017A Closure Component Category
Penetration seals that exceed the bounding limitations of M-663-00017	Penetration Seal

C.32.4 Combustible Loading

The cumulative combustible loading classification for Fire Area C-32 is High. Refer to Section 4.3.5 for further discussion regarding cable chase combustible loading.

ATTACHMENT B
FIRE HAZARD ANALYSIS
(Page 166 of 250)

C.32.5 Fire Protection

Automatic smoke detection is provided in this area. A manual-pull fire alarm station is located at the normal exit from the adjacent area (C-27). Detector or pull station activation results in local fire alarm notification appliance operation and annunciation within the Control Room. The Control Room annunciation of a detection or pull station alarm is point addressable for a quick and easy means to identify the location associated with the device in alarm.

An automatic wet pipe sprinkler system, is installed in this area. The system is equipped with closed head spray nozzles. Backup to the automatic sprinkler system is by portable extinguishers and manual hose stations located in Fire Area C-27 and Stairwell Vestibule 3616.

Access to the chase is through a 3-hour-rated door.

Drainage in this area is by one 4-inch floor drain. This is adequate to handle maximum sprinkler system discharge and hose station discharge. The drain discharges to the 1974' elevation and ultimately to the Control Building Sump, which is emptied by sump pumps. Refer to drawing series M-12LF for further information on the floor and equipment drain system.

C.32.6 Isolation and Smoke Removal

The fire barriers will contain a fire within the Fire Area until extinguished. No ventilation ductwork penetrates the fire barriers in this Fire Area. Refer to Section 4.3.7.2 for smoke removal discussion.

C.32.7 Analysis

C.32.7.1 Fire Suppression

A fire in this area will be detected and alarmed by the automatic detection system. In the event that a fire develops, it will be contained by the fire barrier and extinguished by the automatic suppression system. Should the automatic suppression system fail, manual hose streams can be directed through the access opening to extinguish the fire.

C.32.7.2 Safe Shutdown Capability

As applicable, XX-E-013 identifies electrical PFSSD equipment located within the Fire Area, while E-15000 identifies PFSSD circuits. The detailed PFSSD analysis for the Fire Area is provided in E-1F9910. The analysis demonstrates that a success path of PFSSD equipment, unaffected by a C-32 fire, remains available for achieving and maintaining hot standby and ultimately, transition to cold shutdown, if necessary. Therefore, a fire within Fire Area C-32 will not prevent safe shutdown of the plant.

ATTACHMENT B
FIRE HAZARD ANALYSIS
(Page 167 of 250)

Fire Area C-33 (Reference A-1804)

C.33.1 Fire Area Description

South Vertical Cable Chase (Room 3804), Control Building El. 2073-6.

C.33.2 Major Equipment

Electric cable only.

C.33.3 Design Features

This Fire Area is separated from all other Fire Areas by fire barrier construction and penetration closure assemblies (structural steel fireproofing, fire door, and penetration seals) that are directly qualified by 3-hour fire endurance testing in accordance with criteria of the applicable controlling standard (ASTM E-119, ASTM E-152, UL-10B, UL-555, or IEEE-634) for the respective barrier assembly protective feature. Since this is the highest elevation, the ceiling of the Fire Area is not rated.

C.33.4 Combustible Loading

The cumulative combustible loading classification for Fire Area C-33 is High. Refer to Section 4.3.5 for further discussion regarding cable chase combustible loading.

C.33.5 Fire Protection

Automatic smoke detection is provided in this area. A manual-pull fire alarm station is located at the normal exit from the adjacent Room 3801. Detector or pull station activation results in local fire alarm notification appliance operation and annunciation within the Control Room. The Control Room annunciation of a detection or pull station alarm is point addressable for a quick and easy means to identify the location associated with the device in alarm.

An automatic wet pipe sprinkler system, is installed in this area. The system is equipped with closed head spray nozzles. Backup to the automatic sprinkler system is by portable extinguishers and manual hose stations located in Fire Area C-22.

Access to the chase is through a 3-hour-rated door.

Drainage in this area is by one 4-inch floor drain. This is adequate to handle maximum sprinkler system discharge and hose station discharge. The drain discharges to the 1974' elevation and ultimately to the Control Building Sump, which is emptied by sump pumps. Refer to drawing series M-12LF for further information on the floor and equipment drain system.

C.33.6 Isolation and Smoke Removal

The fire barriers will contain a fire within the Fire Area until extinguished. No ventilation ductwork penetrates the fire barriers in this Fire Area. Refer to Section 4.3.7.2 for smoke removal discussion.

ATTACHMENT B
FIRE HAZARD ANALYSIS
(Page 168 of 250)

C.33.7 Analysis

C.33.7.1 Fire Suppression

A fire in this area will be detected and alarmed by the automatic detection system. In the event that a fire develops, it will be contained by the fire barriers and extinguished by the automatic suppression system. Should the automatic suppression system fail, manual hose streams can be directed through the access opening to extinguish the fire.

C.33.7.2 Safe Shutdown Capability

As applicable, XX-E-013 identifies electrical PFSSD equipment located within the Fire Area, while E-15000 identifies PFSSD circuits. The detailed PFSSD analysis for the Fire Area is provided in E-1F9910. The analysis demonstrates that a success path of PFSSD equipment, unaffected by a C-33 fire, remains available for achieving and maintaining hot standby and ultimately, transition to cold shutdown, if necessary. Additionally, PFSSD manual actions for a fire in this area were evaluated as feasible within E-1F9900. Therefore, a fire within Fire Area C-33 will not prevent safe shutdown of the plant.

ATTACHMENT B
FIRE HAZARD ANALYSIS
(Page 169 of 250)

Fire Area C-34 (Reference A-1804)

C.34.1 Fire Area Description

Vertical Cable Chase at column line CA-C6, Control Building El. 2073-6.

C.34.2 Major Equipment

Electric cable only.

C.34.3 Design Features

This Fire Area is separated from all other Fire Areas by fire barrier construction and penetration closure assemblies (structural steel fireproofing, fire door, and penetration seals) that are directly qualified by 3-hour fire endurance testing in accordance with criteria of the applicable controlling standard (ASTM E-119, ASTM E-152, UL-10B, UL-555, or IEEE-634) for the respective barrier assembly protective feature. Since this is the highest elevation, the ceiling of the Fire Area is not rated.

C.34.4 Combustible Loading

The cumulative combustible loading classification for Fire Area C-34 is High. Refer to Section 4.3.5 for further discussion regarding cable chase combustible loading.

C.34.5 Fire Protection

Automatic smoke detection is provided in this area. A manual-pull fire alarm station is located at the normal exit from the adjacent Room 3801. Detector or pull station activation results in local fire alarm notification appliance operation and annunciation within the Control Room. The Control Room annunciation of a detection or pull station alarm is point addressable for a quick and easy means to identify the location associated with the device in alarm.

An automatic wet pipe sprinkler system, is installed in this area. The system is equipped with closed head spray nozzles. Backup to the automatic sprinkler system is by portable extinguishers and manual hose stations located in Fire Area C-22.

Access to the chase is through a 3-hour-rated door.

Drainage in this area is by one 4-inch floor drain. This is adequate to handle maximum sprinkler system discharge and hose station discharge. The drain discharges to the 1974' elevation and ultimately to the Control Building Sump, which is emptied by sump pumps. Refer to drawing series M-12LF for further information on the floor and equipment drain system.

C.34.6 Isolation and Smoke Removal

The fire barriers will contain a fire within the Fire Area until extinguished. No ventilation ductwork penetrates the fire barriers in this Fire Area. Refer to Section 4.3.7.2 for smoke removal discussion.

ATTACHMENT B
FIRE HAZARD ANALYSIS
(Page 170 of 250)

C.34.7 Analysis

C.34.7.1 Fire Suppression

A fire in this area will be detected and alarmed by the automatic detection system. In the event that a fire develops, it will be contained by the fire barriers and extinguished by the automatic suppression system. Should the automatic suppression system fail, manual hose streams can be directed through the access opening to extinguish the fire.

C.34.7.2 Safe Shutdown Capability

As applicable, XX-E-013 identifies electrical PFSSD equipment located within the Fire Area, while E-15000 identifies PFSSD circuits. The detailed PFSSD analysis for the Fire Area is provided in E-1F9910. The analysis demonstrates that a success path of PFSSD equipment, unaffected by a C-34 fire, remains available for achieving and maintaining hot standby and ultimately, transition to cold shutdown, if necessary. Therefore, a fire within Fire Area C-34 will not prevent safe shutdown of the plant.

ATTACHMENT B
FIRE HAZARD ANALYSIS
(Page 171 of 250)

Fire Area C-35 (Reference A-1802)

C.35.1 Fire Area Description

Control Building corridor, El. 2016 Rooms 3401, 3406, and 3412.

C.35.2 Major Equipment

None.

C.35.3 Design Features

This Fire Area is separated from all other Fire Areas by fire barrier construction and penetration closure assemblies (structural steel fireproofing, fire doors, fire dampers, and penetration seals) that satisfy at least one of the following criteria:

- Are directly qualified by 3-hour fire endurance testing in accordance with criteria of the applicable controlling standard (ASTM E-119, ASTM E-152, UL-10B, UL-555, or IEEE-634) for the respective barrier assembly protective feature.
- Have been evaluated as providing an equivalent level of protection.
- Have been evaluated as providing protection commensurate with the fire hazards present.

Table C.35.3-1 identifies fire barrier features within the Fire Area that are unique or not directly bounded by fire endurance testing. These features are evaluated within M 663-00017A or an appropriate document referenced within M 663-00017A. These evaluations determined that each unique or unbounded fire barrier feature will prevent fire propagation from one Fire Area to another, and will not adversely impact PFSSD equipment or circuits within an adjacent Fire Area.

Table C.35.3-1
Fire Area C-35, Unique or Unbounded Fire Barrier Features

Unique or Unbounded Feature	M-663-00017A Closure Component Category
Ceramic fiber and sheet metal fire barrier segment	Fire Barrier
Missile door 34021	Fire Door
Fire door 34071	Fire Door
3-hour rated fire wrap protection for redundant PFSSD circuits	Fire Wrap
Penetration seals that exceed the bounding limitations of M-663-00017	Penetration Seal
Structural Steel Fireproofing with unprotected thermal shorts	Structural Steel Fireproofing

ATTACHMENT B
FIRE HAZARD ANALYSIS
(Page 172 of 250)

C.35.4 Combustible Loading

The cumulative combustible loading classification for Fire Area C-35 is Low.

C.35.5 Fire Protection

Due to low combustible loading in this area, a detection system is not installed. Manual-pull stations are located at exit doors. Pull station activation results in local fire alarm notification appliance operation and annunciation within the Control Room. The Control Room annunciation of a pull station alarm is point addressable for a quick and easy means to identify the location associated with the device in alarm.

Fire extinguishers and hose stations are located in this area, as delineated on drawing A-1802.

Access to the area for manual fire fighting is via Communications Corridor 3402 and Stairwell 3201.

There are four floor drains located in this area (a fifth drain in the area is capped). These drains are adequate to handle hose station discharge. The floor drains are piped to the Control Building oily waste sump in Room 3102. The sump is emptied by sump pumps. Refer to drawing series M-12LE for further information on the oily waste drain system.

C.35.6 Isolation and Smoke Removal

The fire barriers will contain a fire within the Fire Area until extinguished. Fire dampers will isolate HVAC openings in the fire barriers. Refer to Section 4.3.7.2 for smoke removal discussion.

C.35.7 Analysis

C.35.7.1 Fire Suppression

The fire barriers enclosing this area will protect this area from a fire in the adjoining areas and will contain a fire within this area until extinguished. A fire in this area would be extinguished manually using the hose stations and extinguishers shown on drawing A-1802.

C.35.7.2 Safe Shutdown Capability

As applicable, XX-E-013 identifies electrical PFSSD equipment located within the Fire Area, while E-15000 identifies PFSSD circuits. The detailed PFSSD analysis for the Fire Area is provided in E-1F9910. The analysis demonstrates that a success path of PFSSD equipment, unaffected by a C-35 fire, remains available for achieving and maintaining hot standby and ultimately, transition to cold shutdown, if necessary. Therefore, a fire within Fire Area C-35 will not prevent safe shutdown of the plant.

ATTACHMENT B
FIRE HAZARD ANALYSIS
(Page 173 of 250)

Fire Area C-36 (Reference A-1802)

C.36.1 Fire Area Description

Cable Chase at column line CA-C6, Control building El. 2000 to 2016.

C.36.2 Major Equipment

Electric cable only.

C.36.3 Design Features

This Fire Area is separated from all other Fire Areas by fire barrier construction and penetration closure assemblies (fire doors, fire dampers, and penetration seals) that satisfy at least one of the following criteria:

- Are directly qualified by 3-hour fire endurance testing in accordance with criteria of the applicable controlling standard (ASTM E-119, ASTM E-152, UL-10B, UL-555, or IEEE-634) for the respective barrier assembly protective feature.
- Have been evaluated as providing an equivalent level of protection.
- Have been evaluated as providing protection commensurate with the fire hazards present.

Table C.36.3-1 identifies fire barrier features within the Fire Area that are unique or not directly bounded by fire endurance testing. These features are evaluated within M 663-00017A or an appropriate document referenced within M 663-00017A. These evaluations determined that each unique or unbounded fire barrier feature will prevent fire propagation from one Fire Area to another, and will not adversely impact PFSSD equipment or circuits within an adjacent Fire Area.

Table C.36.3-1
Fire Area C-36, Unique or Unbounded Fire Barrier Features

Unique or Unbounded Feature	M-663-00017A Closure Component Category
Structural Steel Fireproofing with unprotected thermal shorts	Structural Steel Fireproofing

C.36.4 Combustible Loading

The cumulative combustible loading classification for Fire Area C-36 is High. Refer to Section 4.3.5 for further discussion regarding cable chase combustible loading.

ATTACHMENT B
FIRE HAZARD ANALYSIS
(Page 174 of 250)

C.36.5 Fire Protection

A manual-pull fire alarm station is located at the normal exit from this floor elevation. Pull station activation results in local fire alarm notification appliance operation and annunciation within the Control Room. The Control Room annunciation of a pull station alarm is point addressable for a quick and easy means to identify the location associated with the device in alarm.

An automatic wet pipe sprinkler system, is installed in this area. The system is equipped with closed head spray nozzles. Backup to the automatic sprinkler system is by portable extinguishers and a manual hose station located in the ESF Switchgear Room (3302) at this elevation.

Access to the chase is through a 3-hour-rated fire door.

Drainage in this area is by one 4-inch floor drain. This is adequate to handle maximum sprinkler system discharge and hose station discharge. The drain discharges to the 1974' elevation and ultimately to the Control Building Sump, which is emptied by sump pumps. Refer to drawing series M-12LF for further information on the floor and equipment drain system.

C.36.6 Isolation and Smoke Removal

The fire barriers will contain a fire within the Fire Area until extinguished. No ventilation ductwork penetrates the fire barriers in this Fire Area. Refer to Section 4.3.7.2 for smoke removal discussion.

C.36.7 Analysis

C.36.7.1 Fire Suppression

In the event that a fire develops, it will be contained by the fire barriers and extinguished by the automatic suppression system. Should the automatic suppression system fail, manual hose streams can be directed through the access opening to extinguish the fire.

C.36.7.2 Safe Shutdown Capability

As applicable, XX-E-013 identifies electrical PFSSD equipment located within the Fire Area, while E-15000 identifies PFSSD circuits. The detailed PFSSD analysis for the Fire Area is provided in E-1F9910. The analysis demonstrates that a success path of PFSSD equipment, unaffected by a C-36 fire, remains available for achieving and maintaining hot standby and ultimately, transition to cold shutdown, if necessary. Therefore, a fire within Fire Area C-36 will not prevent safe shutdown of the plant.

ATTACHMENT B
FIRE HAZARD ANALYSIS
(Page 175 of 250)

Fire Area C-37 (Reference A-1802)

C.37.1 Fire Area Description

Cable Chase at column line CA-C3, Control building El. 2000 to 2016.

C.37.2 Major Equipment

Electric cable only.

C.37.3 Design Features

This Fire Area is separated from all other Fire Areas by fire barrier construction and penetration closure assemblies (fire doors, fire dampers, and penetration seals) that satisfy at least one of the following criteria:

- Are directly qualified by 3-hour fire endurance testing in accordance with criteria of the applicable controlling standard (ASTM E-119, ASTM E-152, UL-10B, UL-555, or IEEE-634) for the respective barrier assembly protective feature.
- Have been evaluated as providing an equivalent level of protection.
- Have been evaluated as providing protection commensurate with the fire hazards present.

Table C.37.3-1 identifies fire barrier features within the Fire Area that are unique or not directly bounded by fire endurance testing. These features are evaluated within M 663-00017A or an appropriate document referenced within M 663-00017A. These evaluations determined that each unique or unbounded fire barrier feature will prevent fire propagation from one Fire Area to another, and will not adversely impact PFSSD equipment or circuits within an adjacent Fire Area.

Table C.37.3-1
Fire Area C-37, Unique or Unbounded Fire Barrier Features

Unique or Unbounded Feature	M-663-00017A Closure Component Category
Structural Steel Fireproofing with unprotected thermal shorts	Structural Steel Fireproofing

C.37.4 Combustible Loading

The cumulative combustible loading classification for Fire Area C-37 is High. Refer to Section 4.3.5 for further discussion regarding cable chase combustible loading.

ATTACHMENT B
FIRE HAZARD ANALYSIS
(Page 176 of 250)

C.37.5 Fire Protection

A manual-pull fire alarm station is located at the normal exit from this floor elevation. Pull station activation results in local fire alarm notification appliance operation and annunciation within the Control Room. The Control Room annunciation of a pull station alarm is point addressable for a quick and easy means to identify the location associated with the device in alarm.

An automatic wet pipe sprinkler system, is installed in this area. The system is equipped with closed head spray nozzles. Backup to the automatic sprinkler system is by portable extinguishers and a manual hose station located in the ESF Switchgear Room (3301) at this elevation.

Access to the chase is through a 3-hour-rated door.

Drainage in this area is by one 4-inch floor drain. This is adequate to handle maximum sprinkler system discharge and hose station discharge. The drain discharges to the 1974' elevation and ultimately to the Control Building Sump, which is emptied by sump pumps. Refer to drawing series M-12LF for further information on the floor and equipment drain system.

C.37.6 Isolation and Smoke Removal

The fire barriers will contain a fire within the Fire Area until extinguished. No ventilation ductwork penetrates the fire barriers in this Fire Area. Refer to Section 4.3.7.2 for smoke removal discussion.

C.37.7 Analysis

C.37.7.1 Fire Suppression

In the event that a fire develops, it will be contained by the fire barriers and extinguished by the automatic suppression system. Should the automatic suppression system fail, manual hose streams can be directed through the access opening to extinguish the fire.

C.37.7.2 Safe Shutdown Capability

As applicable, XX-E-013 identifies electrical PFSSD equipment located within the Fire Area, while E-15000 identifies PFSSD circuits. The detailed PFSSD analysis for the Fire Area is provided in E-1F9910. The analysis demonstrates that a success path of PFSSD equipment, unaffected by a C-37 fire, remains available for achieving and maintaining hot standby and ultimately, transition to cold shutdown, if necessary. Therefore, a fire within Fire Area C-37 will not prevent safe shutdown of the plant.

ATTACHMENT B
FIRE HAZARD ANALYSIS
(Page 177 of 250)

Fire Area CC-1 (Reference A-1801 through A-1804)

CC.1.1 Fire Area Description

Communications corridor (all elevations) Rooms 3102, 3103, 3225, 3226 3227, 3228, 3303, 3304, 3402 3502, 3503, 3611 3612, 3613 3614, 3619, 3701, 3702, 3703, 3704, 3705, 3802, 3803, and OP-6.

CC.1.2 Major Equipment

Plant computer, central chilled and hot water package, and HVAC equipment, batteries, hydrogen monitor, power distribution equipment.

CC.1.3 Design Features

With the exception of the open communication with the Turbine Building on the east end, this Fire Area is separated from all other Fire Areas by fire barrier construction and penetration closure assemblies (fire doors, fire dampers, and penetration seals) that satisfy at least one of the following criteria:

- Are directly qualified by 3-hour fire endurance testing in accordance with criteria of the applicable controlling standard (ASTM E-119, ASTM E-152, UL-10B, UL-555, or IEEE-634) for the respective barrier assembly protective feature.
- Have been evaluated as providing an equivalent level of protection.
- Have been evaluated as providing protection commensurate with the fire hazards present.

Table CC.1.3-1 identifies fire barrier features within the Fire Area that are unique or not directly bounded by fire endurance testing. These features are evaluated within M 663-00017A or an appropriate document referenced within M 663-00017A. These evaluations determined that each unique or unbounded fire barrier feature will prevent fire propagation from one Fire Area to another, and will not adversely impact PFSSD equipment or circuits within an adjacent Fire Area.

Table CC.1.3-1
Fire Area CC-1, Unique or Unbounded Fire Barrier Features

Unique or Unbounded Feature	M-663-00017A Closure Component Category
Missile door 14032	Fire Door
Missile door 33012	Fire Door
Missile door 33044	Fire Door
Missile door 34021	Fire Door
Missile door 35021	Fire Door
Missile door 36042	Fire Door
Missile door 38011	Fire Door
Penetration seals that exceed the bounding limitations of M-663-00017	Penetration Seal

ATTACHMENT B
FIRE HAZARD ANALYSIS
(Page 178 of 250)

The ceiling of this area is the building roof, and the bottom floor is on grade. At floor El. 2000 feet and above, this area is open to the Turbine Building. However, Rooms 3702 and 3703 are separated from all of the adjacent rooms within the Communication Corridor and Turbine Building by fire rated barriers; floor, walls and ceiling. The floor of the Rooms (3702, 3703) are at EL. 2061'-6" and the ceiling is at EL. 2074'-2".

CC.1.4 Combustible Loading

The cumulative combustible loading classification for Fire Area CC-1 is Low. This includes the combustible gas cylinder rack in Room 3102 that is necessary for laboratory analysis activities in the Health Physics Hot Laboratory.

The combustible loading associated with Rooms 3702 and 3703 is not considered to contribute to a fire in this Fire Area due to the fire barriers provided for each of these rooms.

CC.1.5 Fire Protection

Automatic smoke detectors are installed in areas which contain appreciable quantities of combustibles. Attachment A identifies the specific rooms in this Fire Area that contain detection. Manual-pull fire alarm stations are located near the exit doorways from each elevation of this area. Detector or pull station activation results in local fire alarm notification appliance operation and annunciation within the Control Room. The Control Room annunciation of a detection or pull station alarm is point addressable for a quick and easy means to identify the location associated with the device in alarm.

At the floor elevations below the turbine operating floor where the Communications Corridor opens into the Turbine Building, an automatic pre-action sprinkler system is provided in the Turbine Building to protect this area from a fire in the Turbine Building.

Access to this area is from the Control Building through doors at each elevation, from the Turbine Building, and from the exterior through doors in the north wall of the building.

Adequate drainage is provided to handle maximum hose station discharge. The drains discharge to the Control Building oily waste sump in Room 3102. The sump is emptied by sump pumps. Refer to drawing series M-12LF for further information on the floor and equipment drain system.

CC.1.6 Isolation and Smoke Removal

The fire barriers will contain a fire within the Fire Area until extinguished. Fire dampers will isolate HVAC openings in the fire barriers. Refer to Section 4.3.7.2 for smoke removal discussion.

CC.1.7 Analysis

CC.1.7.1 Fire Suppression

A fire in this area will be detected and alarmed by the automatic detection system. In all areas, the fire can be extinguished, using hose stations and/or portable extinguishers.

ATTACHMENT B
FIRE HAZARD ANALYSIS
(Page 179 of 250)

CC.1.7.2 Safe Shutdown Capability

As applicable, XX-E-013 identifies electrical PFSSD equipment located within the Fire Area, while E-15000 identifies PFSSD circuits. The detailed PFSSD analysis for the Fire Area is provided in E-1F9910. The analysis demonstrates that a success path of PFSSD equipment, unaffected by an CC-1 fire, remains available for achieving and maintaining hot standby and ultimately, transition to cold shutdown, if necessary. Therefore, a fire within Fire Area CC-1 will not prevent safe shutdown of the plant. This, coupled with the defense in depth fire protection features and administrative controls for the Fire Area, provides reasonable assurance that 10 CFR Part 20 radiation limits will not be exceeded due to a fire in CC-1.

ATTACHMENT B
FIRE HAZARD ANALYSIS
(Page 180 of 250)

Fire Area D-1 (Reference A-1802 through A-1804)

D.1.1 Fire Area Description

Diesel Generator Room 5203 (east).

D.1.2 Major Equipment

Standby diesel generator package, associated auxiliaries, and fuel oil day tank.

D.1.3 Design Features

This Fire Area is separated from all other Fire Areas by fire barrier construction and penetration closure assemblies (fire doors, fire dampers, and penetration seals) that satisfy at least one of the following criteria:

- Are directly qualified by 3-hour fire endurance testing in accordance with criteria of the applicable controlling standard (ASTM E-119, ASTM E-152, UL-10B, UL-555, or IEEE-634) for the respective barrier assembly protective feature.
- Have been evaluated as providing an equivalent level of protection.
- Have been evaluated as providing protection commensurate with the fire hazards present.

Table D.1.3-1 identifies fire barrier features within the Fire Area that are unique or not directly bounded by fire endurance testing. These features are evaluated within M 663-00017A or an appropriate document referenced within M 663-00017A. These evaluations determined that each unique or unbounded fire barrier feature will prevent fire propagation from one Fire Area to another, and will not adversely impact PFSSD equipment or circuits within an adjacent Fire Area. (Reference 3.1, Section F.9)

Table D.1.3-1
Fire Area D-1, Unique or Unbounded Fire Barrier Features

Unique or Unbounded Feature	M-663-00017A Closure Component Category
Penetration seals that exceed the bounding limitations of M-663-00017	Penetration Seal
Structural Steel Fireproofing with unprotected thermal shorts	Structural Steel Fireproofing

To minimize property damage, the 18” concrete slab roof is also a fire rated boundary, with the exception of the ventilation openings. No safety-related equipment is located above the building’s ceiling. (Reference 3.1, Section F.9)

A curb is provided at the interconnecting door between this area and the ESF Switchgear Room (Fire Area C-10) to prevent the sprinkler system discharge from passing into Fire Area C-10.

ATTACHMENT B
FIRE HAZARD ANALYSIS
(Page 181 of 250)

The trench between the two Diesel Generator Rooms (P511W0018) is sealed with full depth grout at the communicating wall (column line DB). This seal configuration provides at least a 3-hour fire resistance rating.

D.1.4 Combustible Loading

The cumulative combustible loading classification for Fire Area D-1 is Moderate.

The diesel fuel oil day tank has a nominal capacity of 550 gallons. The dike around the base of the tank will hold at least 110 percent of the tank contents. The dike area is drained by gravity to a 900-gallon, covered sump in the same Diesel Generator Room. The oil can be pumped outdoors to a truck connection for removal from the building.

Each diesel fuel oil tank is provided with protection features to preclude the uncontrolled leakage of diesel fuel. The design features provided for the day tank were reviewed and accepted by the NRC at the Wolf Creek Fire Protection Audit of February 6 to 9, 1984. (Reference 3.1, Section F.9)

Diesel fuel is stored in underground tanks. The diesel fuel storage tanks are buried approximately 23 feet from the Diesel Generator Building wall. The storage tanks are set on a firm foundation, backfilled with noncorrosive sand surrounding the tank (6 inches minimum) and provided with a covering of 2 feet (minimum) of earth. This bulk storage of flammable liquids is remote from PFSSD SSCs. (Reference 3.1, Section F.10)

D.1.5 Fire Protection

Automatic thermal detectors and infrared detectors are provided in this area. Manual-pull fire alarm stations are located near the exit doorways from this area. Detector or pull station activation alarms locally and in the Control Room. The Control Room annunciation is zoned for quick identification of the specific area in alarm. (Reference 3.1, Section F.9)

An automatic preaction sprinkler system is provided for this area. The system is charged by thermal detector alarm or by manual activation of the suppression release station located in Room 3302, (outside the north exit from Fire Area D-1). Thermal detector or suppression release station activation will also lockout the emergency diesel generator fuel oil transfer pump, unless the pump is running. This configuration is provided to preclude a spurious fire protection system trip under accident conditions that would present a negative consequence to emergency diesel generator performance. (Reference 3.1, Section F.9)

A hose station and portable extinguishers are provided just outside this Fire Area, and portable extinguishers are located within the area, as indicated on drawing A-1802. The hose station is equipped with 100 feet of hose for effective coverage of this Fire Area.

The area is accessible for manual fire fighting from the south ESF Switchgear Room 3302.

ATTACHMENT B
FIRE HAZARD ANALYSIS
(Page 182 of 250)

Adequate floor drains are provided in the area to remove sprinkler and hose station discharge without appreciable accumulation. The drainage is collected in a sump within the area. The sump is emptied by sump pumps. The sump pump discharge lines from the two Diesel Generator Room sumps are connected outside of the Diesel Generator Building. It is not possible for a flame to spread through the pumps, valves, and piping from one sump to another. Refer to drawing series M-12LE for further information on the oily waste drain system. (Reference 3.1, Section F.9)

D.1.6 Isolation and Smoke Removal

A fire in this area will be contained by the fire barriers. Heat and smoke venting for each Diesel Generator Room is provided by utilizing the exhaust air flow path. The free area of the exhaust air flow path provides at least 1.0 square feet of venting area for each 200 square feet of floor area. Smoke exhaust fans per se are not employed. Normal ventilation exhaust systems are utilized throughout for smoke removal. (Reference 3.1, Section F.9)

D.1.7 Analysis

D.1.7.1 Fire Suppression

Early warning fire detection is by infrared detectors, which will readily detect the type of fire caused by the burning of fuel and lube oils. In the event of a large fire, thermal detectors will charge the sprinkler system and the fusible link heads will open to extinguish the fire.

In the event the automatic system fails (identified by Control Room annunciation), the hose stream available will control the fire. As previously discussed, a thermal fire detection signal stops the emergency diesel generator fuel oil transfer pump, unless it is running. Depending upon the quantity of oil involved in the fire at this point, manual extinguishment with portable extinguishers and/or the hose station may be possible. If additional hose streams are required, the room is accessible from the yard hose hydrant system.

D.1.7.2 Safe Shutdown Capability

As applicable, XX-E-013 identifies electrical PFSSD equipment located within the Fire Area, while E-15000 identifies PFSSD circuits. The detailed PFSSD analysis for the Fire Area is provided in E-1F9910. The analysis demonstrates that a success path of PFSSD equipment, unaffected by an D-1 fire, remains available for achieving and maintaining hot standby and ultimately, transition to cold shutdown, if necessary. Therefore, a fire within Fire Area D-1 will not prevent safe shutdown of the plant. This, coupled with the defense in depth fire protection features and administrative controls for the Fire Area, provides reasonable assurance that 10 CFR Part 20 radiation limits will not be exceeded due to a fire in D-1.

ATTACHMENT B
FIRE HAZARD ANALYSIS
(Page 183 of 250)

Fire Area D-2 (Reference A-1802 through A-1804)

D.2.1 Fire Area Description

Diesel Generator Room 5201 (west).

D.2.2 Major Equipment

Standby diesel generator package, associated auxiliaries, and fuel oil day tank.

D.2.3 Design Features

This Fire Area is separated from all other Fire Areas by fire barrier construction and penetration closure assemblies (fire doors, fire dampers, and penetration seals) that satisfy at least one of the following criteria:

- Are directly qualified by 3-hour fire endurance testing in accordance with criteria of the applicable controlling standard (ASTM E-119, ASTM E-152, UL-10B, UL-555, or IEEE-634) for the respective barrier assembly protective feature.
- Have been evaluated as providing an equivalent level of protection.
- Have been evaluated as providing protection commensurate with the fire hazards present.

Table D.2.3-1 identifies fire barrier features within the Fire Area that are unique or not directly bounded by fire endurance testing. These features are evaluated within M 663-00017A or an appropriate document referenced within M 663-00017A. These evaluations determined that each unique or unbounded fire barrier feature will prevent fire propagation from one Fire Area to another, and will not adversely impact PFSSD equipment or circuits within an adjacent Fire Area. (Reference 3.1, Section F.9)

Table D.2.3-1
Fire Area D-2, Unique or Unbounded Fire Barrier Features

Unique or Unbounded Feature	M-663-00017A Closure Component Category
Penetration seals that exceed the bounding limitations of M-663-00017	Penetration Seal
Structural Steel Fireproofing with unprotected thermal shorts	Structural Steel Fireproofing

To minimize property damage , the 18” concrete slab roof is also a fire rated boundary, with the exception of the ventilation openings. No safety-related equipment is located above the building’s ceiling. (Reference 3.1, Section F.9)

A curb is provided at the interconnecting door between this area and the ESF Switchgear Room (Fire Area C-10) to prevent the sprinkler system discharge from passing into Fire Area C-10.

ATTACHMENT B
FIRE HAZARD ANALYSIS
(Page 184 of 250)

The trench between the two Diesel Generator Rooms (P511W0018) is sealed with full depth grout at the communicating wall (column line DB). This seal configuration provides at least a 3-hour fire resistance rating.

D.2.4 Combustible Loading

The cumulative combustible loading classification for Fire Area D-2 is Moderate.

The diesel fuel oil day tank has a nominal capacity of 550 gallons. The dike around the base of the tank will hold at least 110 percent of the tank contents. The dike area is drained by gravity to a 900-gallon, covered sump in the same Diesel Generator Room. The oil can be pumped outdoors to a truck connection for removal from the building.

Each diesel fuel oil tank is provided with protection features to preclude the uncontrolled leakage of diesel fuel. The design features provided for the day tank were reviewed and accepted by the NRC at the Wolf Creek Fire Protection Audit of February 6 to 9, 1984. (Reference 3.1, Section F.9)

Diesel fuel is stored in underground tanks. The diesel fuel storage tanks are buried approximately 23 feet from the Diesel Generator Building wall. The storage tanks are set on a firm foundation, backfilled with noncorrosive sand surrounding the tank (6 inches minimum) and provided with a covering of 2 feet (minimum) of earth. This bulk storage of flammable liquids is remote from PFSSD SSCs. (Reference 3.1, Section F.10)

D.2.5 Fire Protection

Automatic thermal detectors and infrared detectors are provided in this area. Manual-pull fire alarm stations are located near the exit doorways from this area. Detector or pull station activation alarms locally and in the Control Room. The Control Room annunciation is zoned for quick identification of the specific area in alarm. (Reference 3.1, Section F.9)

An automatic preaction sprinkler system is provided for this area. The system is charged by thermal detector alarm or by manual activation of the suppression release station located in Room 3302, (outside the north exit from Fire Area D-2). Thermal detector or suppression release station activation will also lockout the emergency diesel generator fuel oil transfer pump, unless the pump is running. This configuration is provided to preclude a spurious fire protection system trip under accident conditions that would present a negative consequence to emergency diesel generator performance. (Reference 3.1, Section F.9)

A hose station and portable extinguishers are provided just outside this Fire Area, and portable extinguishers are located within the area, as indicated on drawing A-1802. The hose station is equipped with 100 feet of hose for effective coverage of this Fire Area.

The area is accessible for manual fire fighting from the south ESF Switchgear Room 3302.

ATTACHMENT B
FIRE HAZARD ANALYSIS
(Page 185 of 250)

Adequate floor drains are provided in the area to remove sprinkler and hose station discharge without appreciable accumulation. The drainage is collected in a sump within the area. The sump is emptied by sump pumps. The sump pump discharge lines from the two Diesel Generator Room sumps are connected outside of the Diesel Generator Building. It is not possible for a flame to spread through the pumps, valves, and piping from one sump to another. Refer to drawing series M-12LE for further information on the oily waste drain system. (Reference 3.1, Section F.9)

D.2.6 Isolation and Smoke Removal

A fire in this area will be contained by the fire barriers. Heat and smoke venting for each Diesel Generator Room is provided by utilizing the exhaust air flow path. The free area of the exhaust air flow path provides at least 1.0 square feet of venting area for each 200 square feet of floor area. Smoke exhaust fans per se are not employed. Normal ventilation exhaust systems are utilized throughout for smoke removal. (Reference 3.1, Section F.9)

D.2.7 Analysis

D.2.7.1 Fire Suppression

Early warning fire detection is by infrared detectors, which will readily detect the type of fire caused by the burning of fuel and lube oils. In the event of a large fire, thermal detectors will charge the sprinkler system and the fusible link heads will open to extinguish the fire.

In the event the automatic system fails (identified by Control Room annunciation), the hose stream available will control the fire. As previously discussed, a thermal fire detection signal stops the emergency diesel generator fuel oil transfer pump, unless it is running. Depending upon the quantity of oil involved in the fire at this point, manual extinguishment with portable extinguishers and/or the hose station may be possible. If additional hose streams are required, the room is accessible from the yard hose hydrant system.

D.2.7.2 Safe Shutdown Capability

As applicable, XX-E-013 identifies electrical PFSSD equipment located within the Fire Area, while E-15000 identifies PFSSD circuits. The detailed PFSSD analysis for the Fire Area is provided in E-1F9910. The analysis demonstrates that a success path of PFSSD equipment, unaffected by an D-2 fire, remains available for achieving and maintaining hot standby and ultimately, transition to cold shutdown, if necessary. Therefore, a fire within Fire Area D-2 will not prevent safe shutdown of the plant. This, coupled with the defense in depth fire protection features and administrative controls for the Fire Area, provides reasonable assurance that 10 CFR Part 20 radiation limits will not be exceeded due to a fire in D-2.

ATTACHMENT B
FIRE HAZARD ANALYSIS
(Page 186 of 250)

Fire Area ESWA (Reference M-KG080, E-KF0231 and E-KR0231)

ESWA.1 Fire Area Description

Essential Service Water Pumphouse Room K105, Access Vaults MHE1 through MHE5 and Train A ESW Electrical Duct Banks Room K105A.

ESWA.2 Major Equipment

Essential Service Water Pumps, Traveling Screens, Strainers, Pre-Lube Storage Tank, Ventilation Fans, Electric Cable and ESW Electrical Duct Banks and Access Vaults.

ESWA.3 Design Features

This Fire Area is separated from adjacent Fire Area ESWB by a common concrete wall and penetration closure assemblies that are directly qualified by 3-hour fire endurance testing in accordance with criteria of the applicable controlling standard (ASTM E-119, UL-555, or IEEE-634) for the respective barrier assembly protective feature. No door is present in this fire boundary.

Buried raceways containing electrical cabling associated with the Essential Service Water System are routed from the ESW Pump House to the Control Building. The raceways are embedded below grade except where they transition through a total of five access vaults. At these locations a buried concrete vault containing two cells is provided to separate the redundant raceways. Each cell within a vault physically separates redundant train cable by a minimum of 18” concrete construction on all sides. The vault equipment hatches have an 18” overlap with vault interior walls and the manway hatches have at least an 11” overlap. All penetrations into the vaults are adequately sealed to minimize in leakage of air or water.

ESWA.4 Combustible Loading

The cumulative combustible loading classification for Fire Area ESWA is Low. This combustible loading applies to Room K105 only. Combustible loading for the access vaults and electrical duct banks (Room K105A) is not quantified.

The ESW system is manually treated for organic fouling with a microbial control agent (biocide) that is a combustible liquid. The liquid is piped within the ESWA where it taps into the ESW system piping.

ESWA.5 Fire Protection

Room K105 (Train A ESW Pumphouse)

Automatic smoke detectors are installed at the ceiling of the area. A manual-pull fire alarm station is located at the exit from this area. Detector or pull station activation results in local fire alarm notification appliance operation and annunciation within the Control Room. The Control Room annunciation of a detection or pull station alarm is point addressable for a quick and easy means to identify the location associated with the device in alarm. (Reference 3.1, Section F.11)

ATTACHMENT B
FIRE HAZARD ANALYSIS
(Page 187 of 250)

Portable extinguishers and hose stations are provided for manual fire suppression. Water for the hose stations is taken from the ESW piping, however these stations are pressurized by the service water system from the Circulating Water Screen House unless a low suction pressure signal in the Auxiliary Feedwater System, an SIS or loss of off-site power signal has caused the ESW pumps to start. Under these conditions water is taken from the ESW System. Any water used in this area for fire suppression would flow to the ultimate heat sink. Refer to Figure ESWA.5-1 for the ESW Pump House hose station configuration. (Reference 3.1, Section F.11)

Access for manual firefighting is via exterior access through door K1051.

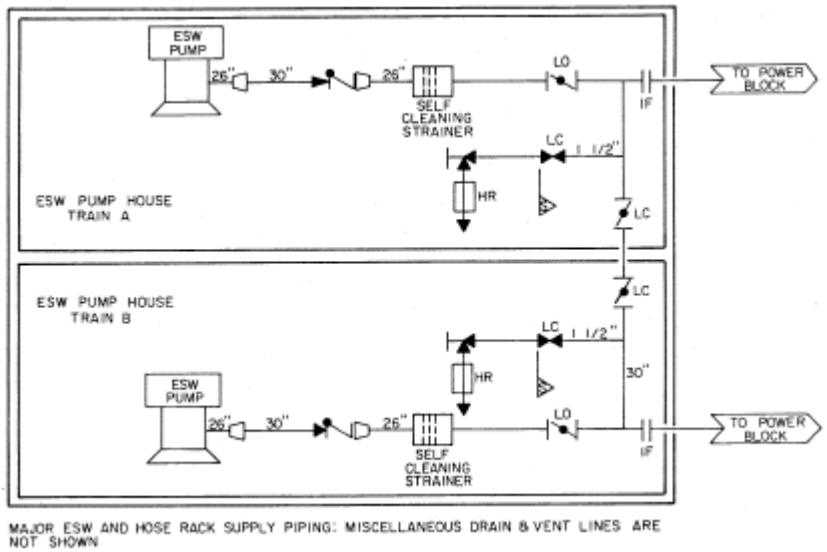

Figure ESWA.5-1, ESW Hose Stations

Room K105A (Train A ESW Duct Banks and Access Vaults)

Fire hydrants are located in the vicinity of the vaults for manual firefighting. The cooling lake is also in the vicinity for manual firefighting.

ESWA.6 Isolation and Smoke Removal

Room K105 – The fire barrier will contain a fire within the Fire Area until extinguished. Refer to Section 4.3.7.2 for smoke removal discussion.

Room K105A – A fire in any one of the cells within a vault will be contained to the cell of origin and will not propagate to the adjacent cell within a vault. The 18” thick concrete walls and ceilings, along with the hatch cover overlap, will help to prevent a fire from propagating into another vault or the surrounding area. Refer to Section 4.3.7.2 for smoke removal discussion.

ATTACHMENT B
FIRE HAZARD ANALYSIS
(Page 188 of 250)

ESWA.7 Analysis

ESWA.7.1 Fire Suppression

Room K105

The fire hazard associated with the injection process for ESW chemical treatment is the undiluted combustible liquid filled piping located in ESWA.

Leakage from the pipe containing concentrated biocide within the ESWA is not anticipated, as the material is compatible with the pipe type, and the piping stresses are within ANSI B31.1 allowable values considering an operation basis earthquake and safe shutdown earthquake loads. Additionally, the piping will only contain the combustible liquid concentration under pressure during periods of chemical injection. During periods of chemical injection inactivity, only residual biocide will remain in the distribution piping to ESW. In the unlikely event of a leak within the piping containing concentrated biocide, only Fire Area ESWA would be affected, as the fire barrier between the pump rooms prevent the same fire from damaging redundant ESW trains.

Due to the complete solubility of the biocide product in water and the very small concentrations of product in ESW system, there is no fire hazard concern associated with the product after it is diluted with ESW water in Fire Area ESWA.

Manual fire suppression equipment is available to extinguish a fire in this area. (Reference 3.1, Section F.11)

Room K105A

Manual fire protection equipment is available to control and extinguish any postulated vault fire.

ESWA.7.2 Safe Shutdown Capability

As applicable, XX-E-013 identifies electrical PFSSD equipment located within the Fire Area, while E-15000 identifies PFSSD circuits. The detailed PFSSD analysis for the Fire Area is provided in E-1F9910. The analysis demonstrates that a success path of PFSSD equipment, unaffected by an ESWA fire, remains available for achieving and maintaining hot standby and ultimately, transition to cold shutdown, if necessary. Therefore, a fire within Fire Area ESWA will not prevent safe shutdown of the plant.

ATTACHMENT B
FIRE HAZARD ANALYSIS
(Page 189 of 250)

Fire Area ESWB (Reference M-KG080, E-KF0231 and E-KR0231)

ESWB.1 Fire Area Description

Essential Service Water Pumphouse Room K104, Access Vaults MHE1 through MHE5 and Train B ESW Electrical Duct Banks Room K104A.

ESWB.2 Major Equipment

Essential Service Water Pumps, Traveling Screens, Strainers, Pre-Lube Storage Tank, Ventilation Fans, Electric Cable and ESW Electrical Duct Banks and Access Vaults.

ESWB.3 Design Features

This Fire Area is separated from adjacent Fire Area ESWA by a common concrete wall and penetration closure assemblies that are directly qualified by 3-hour fire endurance testing in accordance with criteria of the applicable controlling standard (ASTM E-119, UL-555, or IEEE-634) for the respective barrier assembly protective feature. No door is present in this fire boundary.

Buried raceways containing electrical cabling associated with the Essential Service Water System are routed from the ESW Pump House to the Control Building. The raceways are embedded below grade except where they transition through a total of five access vaults. At these locations a buried concrete vault containing two cells is provided to separate the redundant raceways. Each cell within a vault physically separates redundant train cable by a minimum of 18” concrete construction on all sides. The vault equipment hatches have an 18” overlap with vault interior walls and the manway hatches have at least an 11” overlap. All penetrations into the vaults are adequately sealed to minimize in leakage of air or water.

ESWB.4 Combustible Loading

The cumulative combustible loading classification for Fire Area ESWB is Low. This combustible loading applies to Room K104 only. Combustible loading for the access vaults and electrical duct banks (Room K104A) is not quantified.

The ESW system is manually treated for organic fouling with a microbial control agent (biocide) that is a combustible liquid. The liquid is piped within the ESWA where it taps into the ESW system piping.

ESWB.5 Fire Protection

Room K104 (Train B ESW Pumphouse)

Automatic smoke detectors are installed at the ceiling of the area. A manual-pull fire alarm station is located at the exit from this area. Detector or pull station activation results in local fire alarm notification appliance operation and annunciation within the Control Room. The Control Room annunciation of a detection or pull station alarm is point addressable for a quick and easy means to identify the location associated with the device in alarm. (Reference 3.1, Section F.11)

ATTACHMENT B
FIRE HAZARD ANALYSIS
(Page 190 of 250)

Portable extinguishers and hose stations are provided for manual fire suppression. Water for the hose stations is taken from the ESW piping, however these stations are pressurized by the service water system from the Circulating Water Screen House unless a low suction pressure signal in the Auxiliary Feedwater System, an SIS or loss of off-site power signal has caused the ESW pumps to start. Under these conditions water is taken from the ESW System. Any water used in this area for fire suppression would flow to the ultimate heat sink. Refer to Figure ESWB.5-1 for the ESW Pump House hose station configuration. (Reference 3.1, Section F.11)

Access for manual firefighting is via exterior access through door K1041.

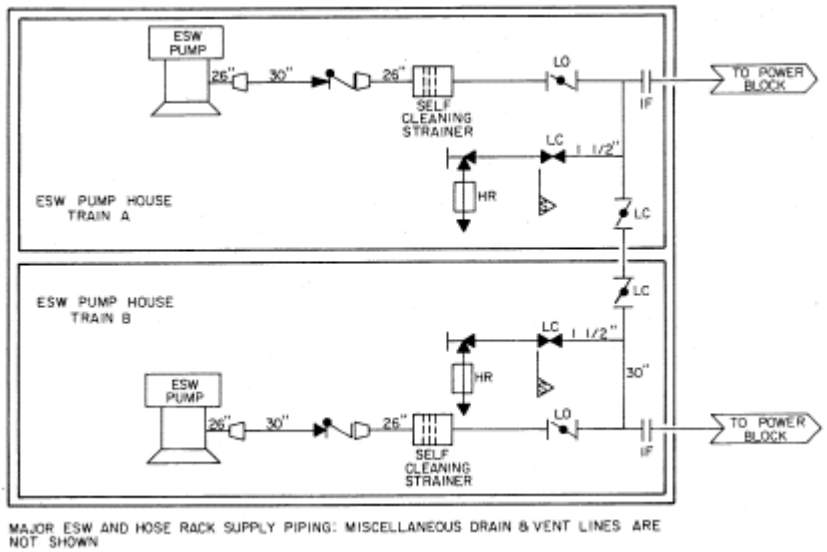

Figure ESWB.5-1, ESW Hose Stations

Room K104A (Train B ESW Duct Banks and Access Vaults)

Fire hydrants are located in the vicinity of the vaults for manual firefighting. The cooling lake is also in the vicinity for manual firefighting.

ESWB.6 Isolation and Smoke Removal

Room K104 - The fire barriers will contain a fire within the Fire Area until extinguished. Refer to Section 4.3.7.2 for smoke removal discussion.

Room K104A – A fire in any one of the cells within a vault will be contained to the cell of origin and will not propagate to the adjacent cell within a vault. The 18” thick concrete walls and ceilings, along with the hatch cover overlap, will help to prevent a fire from propagating into another vault or the surrounding area. Refer to Section 4.3.7.2 for smoke removal discussion.

ATTACHMENT B
FIRE HAZARD ANALYSIS
(Page 191 of 250)

ESWB.7 Analysis

ESWB.7.1 Fire Suppression

Room K104

The fire hazard associated with the injection process for ESW chemical treatment is the undiluted combustible liquid filled piping located in ESWA. Due to the complete solubility of the biocide product in water and the very small concentrations of product in ESW system, there is no fire hazard concern associated with the product after it is diluted with ESW water in Fire Area ESWA. ESWB only contains diluted biocide.

In the unlikely event of a leak within the piping containing concentrated biocide, only Fire Area ESWA would be affected, as the fire barrier between the pump rooms prevent the same fire from damaging redundant ESW trains.

As discussed above, the fire barrier between the pump rooms prevents a single fire from damaging ESW trains. Therefore, a fire originating in ESWB will not impact ESWA. Manual fire suppression equipment is available to extinguish a fire in this area. (Reference 3.1, Section F.11)

Room K104A

Manual fire protection equipment is available to control and extinguish any postulated vault fire.

ESWB.7.2 Safe Shutdown Capability

As applicable, XX-E-013 identifies electrical PFSSD equipment located within the Fire Area, while E-15000 identifies PFSSD circuits. The detailed PFSSD analysis for the Fire Area is provided in E-1F9910. The analysis demonstrates that a success path of PFSSD equipment, unaffected by an ESWB fire, remains available for achieving and maintaining hot standby and ultimately, transition to cold shutdown, if necessary. Therefore, a fire within Fire Area ESWB will not prevent safe shutdown of the plant.

ATTACHMENT B
FIRE HAZARD ANALYSIS
(Page 192 of 250)

Fire Area ESWV (Reference M-KX9002, C-K230, C-K231, C-K232, C-K233, C-K234)

ESWV.1 Fire Area Description

Essential Service Water Yard Pipe Access Vaults AV1 (Z118A), AV2 (Z118B), AV3 (Z118C), AV4 (Z118D), AV5 (Z118E), and AV6 (Z118F).

ESWV.2 Major Equipment

ESW Piping Access Vaults.

ESWV.3 Design Features

Each of the two redundant trains of Essential Service Water System, supply and return piping, pass through buried vaults located in the yard. The vaults are physically independent structures, recessed at grade elevation. All penetrations into the vaults are adequately sealed to minimize in leakage of air or water.

ESW Access Vault AV1 (Z118A) is broken up into two chambers separated by a 2 foot thick concrete wall. Each chamber is 19 feet-3 inches by 24 feet and the access vault has a vault height of 10 feet-9 inches. Details for AV1 are shown on drawing C-K230.

ESW Access Vaults AV2 (Z118B) and AV5 (Z118E) measure approximately 10 feet-6 inches by 24 feet and have a vault height of 11 feet-3 inches. Details for AV2 and AV5 are shown on drawing C-K231.

ESW Access Vault AV3 (Z118C) has a main vault area that measures 44 feet by 12 feet-3 inches and has a vault height of 11 feet-6 inches. There is a small 6 foot by 5 foot valve operations compartment separated from the main AV3 vault chamber by a 2 foot thick concrete wall. Details for vault AV3 are shown on drawing C-K232.

ESW Access vault AV4 (Z118D) has a main vault area that measures 46 feet by 17 feet-9 inches and has a vault height of 10 feet-6 inches. There is a small 6 foot by 5 foot valve operations compartment from the main AV4 vault chamber by a 2 foot thick concrete wall. Details for vault AV4 are shown on drawing C-K233.

ESW Access Vault AV6 (Z118F) is broken up into two chambers separated by a 2 foot thick concrete wall. Each chamber is 14 feet-3 inches by 27 feet and the access vault has a vault height of 10 feet. Details for AV6 are shown on drawing C-K234.

ATTACHMENT B
FIRE HAZARD ANALYSIS
(Page 193 of 250)

For all of the ESW access vaults the roof panels have a 2 foot overlap and lineup flush with the vault walls. The man-way access cover panels have a 5 foot – 6 inch overlap. Vault AV1 has two instrument penetrations in the roof panel. The instruments are used for indication only, no control functions. Vault AV5 has one instrument penetration in the roof panel. The instrument is used for indication only, no control function. Vault AV3, Train B only, has one instrument penetration in the roof panel that is used for indication only, no control functions. Vault AV3 has another instrument penetration that is used for access to instruments in the pipe area, no control functions. Vault AV4, Train A only, has one instrument penetration in the roof panel that is used for indication only, no control functions. Vault AV4 has another instrument penetration that is used for access to instruments in the pipe area, no control functions. Vaults AV3 and AV4 have 120VAC routed into the vault that is used for flow and temperature instrumentation, indication only, no control functions.

ESWV.4 Combustible Loading

The cumulative combustible loading classification for each vault is Low.

ESWV.5 Fire Protection

Fire hydrants are located in the vicinity of the vaults for manual firefighting. The cooling lake is also in the vicinity for manual firefighting.

ESWV.6 Isolation and Smoke Removal

A fire in any one of the pipe access vaults will be contained to the vault and will not propagate to the surrounding area. The two foot thick concrete walls and ceilings, along with the hatch cover overlap, will help to prevent a fire from propagating into another vault or the surrounding area. Refer to Section 4.3.7.2 for smoke removal discussion.

ESWV.7 Analysis

ESWV.7.1 Fire Suppression

There are no ignition sources located within vaults AV1, AV2, AV5, and AV6. The vaults are unheated. Vaults AV3 and AV4 have 120VAC routed into the vault that is used for flow and temperature instrumentation, indication only with no control functions. Manual fire protection equipment is available to control and extinguish any postulated vault fires.

ESWV.7.2 Safe Shutdown Capability

A vault fire will not impact safe shutdown capability. There are no electrically powered safe shutdown components or circuits located in any of the vaults to be damaged by fire. Redundant trains of the Essential Service Water System will not be affected by a single fire in any one of the vaults. Physical separation of the vaults precludes the possibility of a single fire in any one of the vaults from affecting the redundant train vault.

ATTACHMENT B
FIRE HAZARD ANALYSIS
(Page 194 of 250)

Fire Area F-1 (Reference A-1802 through A-1804)

F.1.1 Fire Area Description

Fuel Building General Area all elevations, Rooms 6101, 6102, 6103, 6106, 6201, 6204, 6205, 6210, 6301, and 6302.

F.1.2 Major Equipment

Fuel storage pool bridge crane and cask handling crane.

F.1.3 Design Features

This Fire Area is separated from all other Fire Areas by fire barrier construction and penetration closure assemblies (fire doors, fire dampers, and penetration seals) that satisfy at least one of the following criteria:

- Are directly qualified by 3-hour fire endurance testing in accordance with criteria of the applicable controlling standard (ASTM E-119, ASTM E-152, UL-10B, UL-555, or IEEE-634) for the respective barrier assembly protective feature.
- Have been evaluated as providing an equivalent level of protection.
- Have been evaluated as providing protection commensurate with the fire hazards present.

Table F.1.3-1 identifies fire barrier features within the Fire Area that are unique or not directly bounded by fire endurance testing. These features are evaluated within M 663-00017A or an appropriate document referenced within M 663-00017A. These evaluations determined that each unique or unbounded fire barrier feature will prevent fire propagation from one Fire Area to another, and will not adversely impact PFSSD equipment or circuits within an adjacent Fire Area.

Table F.1.3-1
Fire Area F-1, Unique or Unbounded Fire Barrier Features

Unique or Unbounded Feature	M-663-00017A Closure Component Category
No structural steel fireproofing	Structural Steel Fireproofing
Fuel transfer tube penetration	Penetration Seal
Penetration seals that exceed the bounding limitations of M-663-00017	Penetration Seal

The bottom floor of this area is on soil and, consequently, is not rated. The structural steel of the Fuel Building is not structurally tied into the Auxiliary Building.

New fuel storage is designed for optimum moderation conditions. Refer to USAR Section 9.1 for further discussion. (Reference 3.1, Section F.12)

ATTACHMENT B
FIRE HAZARD ANALYSIS
(Page 195 of 250)

F.1.4 Combustible Loading

The cumulative combustible loading classification for Fire Area F-1 is Low.

F.1.5 Fire Protection

Thermal detectors are installed in the Railroad bay area, while infrared flame detectors are also provided for Refueling Floor El 2047 feet 6 inches. The detection system alarms locally and in the Control Room. The Control Room annunciation is zoned for quick identification of the area in alarm. Manual-pull fire alarm stations are located near the exit doorways from this area. The pull stations also alarm locally and in the Control Room. (Reference 3.1, Section F.12 and F.13)

An automatic preaction sprinkler system is provided for Room 6102, Railroad Bay/Laydown area.

Hose stations and portable extinguishers are provided throughout this fire area, as indicated on drawings A-1802 and A-1804. (Reference 3.1, Section F.12 and F.13)

This area is accessible through one personnel door and one railroad door from the exterior and through a personnel door at each floor elevation at the northwest corner of the building from the Auxiliary Building.

Adequate floor drains (21 total) are provided in the area to remove sprinkler and hose station discharge without appreciable accumulation. The drains discharge to the Fuel Building sump in Room 6104. The sump is emptied by sump pumps. Refer to drawing series M-12LF for further information on the floor and equipment drain system. (Reference 3.1, Section F.12)

F.1.6 Isolation and Smoke Removal

The fire barriers will contain a fire within the Fire Area until extinguished. Fire dampers will isolate HVAC openings in the fire barriers. Refer to Section 4.3.7.2 for smoke removal discussion.

F.1.7 Analysis

F.1.7.1 Fire Suppression

A fire in this area will be detected and alarmed by the automatic detection system. The fire can be extinguished manually, using hose stations and/or portable extinguishers. The preaction sprinkler system in Room 6102, is activated by thermal detection. It does not protect safe shutdown equipment. Consequently, failure of this system to operate will not prevent safe shutdown.

ATTACHMENT B
FIRE HAZARD ANALYSIS
(Page 196 of 250)

F.1.7.2 Safe Shutdown Capability

No fire could cause structural damage to the fuel storage racks in the Fuel Storage Pool. A fire during fuel handling operations could cause damage to either of the fuel handling cranes; however, both cranes are designed to fail safe.

As applicable, XX-E-013 identifies electrical PFSSD equipment located within the Fire Area, while E-15000 identifies PFSSD circuits. The detailed PFSSD analysis for the Fire Area is provided in E-1F9910. The analysis demonstrates that a success path of PFSSD equipment, unaffected by an F-1 fire, remains available for achieving and maintaining hot standby and ultimately, transition to cold shutdown, if necessary. Therefore, a fire within Fire Area F-1 will not prevent safe shutdown of the plant. This, coupled with the defense in depth fire protection features and administrative controls for the Fire Area, provides reasonable assurance that 10 CFR Part 20 radiation limits will not be exceeded due to a fire in F-1.

ATTACHMENT B
FIRE HAZARD ANALYSIS
(Page 197 of 250)

Fire Area F-2 (Reference A-1802)

F.2.1 Fire Area Description

Fuel Pool Cooling Heat Exchanger Room 6104 (west), El. 2000-0.

F.2.2 Major Equipment

Fuel pool cooling heat exchanger B, fuel pool cooling pump B, room cooler, and fuel pool cleanup pumps.

F.2.3 Design Features

This Fire Area is separated from all other Fire Areas by fire barrier construction and penetration closure assemblies (structural steel fireproofing, fire doors, fire dampers, and penetration seals) that satisfy at least one of the following criteria:

- Are directly qualified by 3-hour fire endurance testing in accordance with criteria of the applicable controlling standard (ASTM E-119, ASTM E-152, UL-10B, UL-555, or IEEE-634) for the respective barrier assembly protective feature.
- Have been evaluated as providing an equivalent level of protection.
- Have been evaluated as providing protection commensurate with the fire hazards present.

Table F.2.3-1 identifies fire barrier features within the Fire Area that are unique or not directly bounded by fire endurance testing. These features are evaluated within M 663-00017A or an appropriate document referenced within M 663-00017A. These evaluations determined that each unique or unbounded fire barrier feature will prevent fire propagation from one Fire Area to another, and will not adversely impact PFSSD equipment or circuits within an adjacent Fire Area.

Table F.2.3-1
Fire Area F-2, Unique or Unbounded Fire Barrier Features

Unique or Unbounded Feature	M-663-00017A Closure Component Category
Trench cover panels	Fire Barrier
Penetration seals that exceed the bounding limitations of M-663-00017	Penetration Seal
Structural Steel Fireproofing with unprotected thermal shorts	Structural Steel Fireproofing

F.2.4 Combustible Loading

The cumulative combustible loading classification for Fire Area F-2 is Low. (Reference 3.1, Section F.12)

ATTACHMENT B
FIRE HAZARD ANALYSIS
(Page 198 of 250)

F.2.5 Fire Protection

An automatic smoke detection system is installed in this area. Manual-pull fire alarm stations are located near the exit doorways from the Fuel Building. Detector or pull station activation results in local fire alarm notification appliance operation and annunciation within the Control Room. The Control Room annunciation of a detection or pull station alarm is point addressable for a quick and easy means to identify the location associated with the device in alarm. (Reference 3.1, Section F.12)

Hose stations and portable extinguishers are provided just outside this Fire Area, as indicated on drawing A-1802. (Reference 3.1, Section F.12)

This area is accessible through a door at the south end of the room and a door at the northwest corner.

Adequate floor drains (3 total) are provided in the area to remove hose station discharge without appreciable accumulation. The drains discharge to the Fuel Building sump in the room. The sump is emptied by sump pumps. Refer to drawing series M-12LF for further information on the floor and equipment drain system. (Reference 3.1, Section F.12)

F.2.6 Isolation and Smoke Removal

The fire barriers will contain a fire within the Fire Area until extinguished. Fire dampers will isolate HVAC openings in the fire barriers. Refer to Section 4.3.7.2 for smoke removal discussion.

F.2.7 Analysis

F.2.7.1 Fire Suppression

A fire in the area will be detected and alarmed by the automatic detection system. The fire can be extinguished manually, using hose stations and/or portable extinguishers.

F.2.7.2 Safe Shutdown Capability

As applicable, XX-E-013 identifies electrical PFSSD equipment located within the Fire Area, while E-15000 identifies PFSSD circuits. The detailed PFSSD analysis for the Fire Area is provided in E-1F9910. The analysis demonstrates that a success path of PFSSD equipment, unaffected by an F-2 fire, remains available for achieving and maintaining hot standby and ultimately, transition to cold shutdown, if necessary. Therefore, a fire within Fire Area F-2 will not prevent safe shutdown of the plant. This, coupled with the defense in depth fire protection features and administrative controls for the Fire Area, provides reasonable assurance that 10 CFR Part 20 radiation limits will not be exceeded due to a fire in F-2.

ATTACHMENT B
FIRE HAZARD ANALYSIS
(Page 199 of 250)

Fire Area F-3 (Reference A-1802)

F.3.1 Fire Area Description

Fuel Pool Cooling Heat Exchanger Room 6105 (east),), El. 2000-0.

F.3.2 Major Equipment

Fuel pool cooling heat exchanger A, fuel pool cooling pump A, and room cooler.

F.3.3 Design Features

This Fire Area is separated from all other Fire Areas by fire barrier construction and penetration closure assemblies (structural steel fireproofing, fire doors, fire dampers, and penetration seals) that satisfy at least one of the following criteria:

- Are directly qualified by 3-hour fire endurance testing in accordance with criteria of the applicable controlling standard (ASTM E-119, ASTM E-152, UL-10B, UL-555, or IEEE-634) for the respective barrier assembly protective feature.
- Have been evaluated as providing an equivalent level of protection.
- Have been evaluated as providing protection commensurate with the fire hazards present.

Table F.3.3-1 identifies fire barrier features within the Fire Area that are unique or not directly bounded by fire endurance testing. These features are evaluated within M 663-00017A or an appropriate document referenced within M 663-00017A. These evaluations determined that each unique or unbounded fire barrier feature will prevent fire propagation from one Fire Area to another, and will not adversely impact PFSSD equipment or circuits within an adjacent Fire Area.

Table F.3.3-1
Fire Area F-3, Unique or Unbounded Fire Barrier Features

Unique or Unbounded Feature	M-663-00017A Closure Component Category
Penetration seals that exceed the bounding limitations of M-663-00017	Penetration Seal
Structural Steel Fireproofing with unprotected thermal shorts	Structural Steel Fireproofing

F.3.4 Combustible Loading

The cumulative combustible loading classification for Fire Area F-3 is Low. (Reference 3.1, Section F.12)

ATTACHMENT B
FIRE HAZARD ANALYSIS
(Page 200 of 250)

F.3.5 Fire Protection

An automatic smoke detection system is installed in this area. Manual-pull fire alarm stations are located near the exit doorways from the Fuel Building. Detector or pull station activation results in local fire alarm notification appliance operation and annunciation within the Control Room. The Control Room annunciation of a detection or pull station alarm is point addressable for a quick and easy means to identify the location associated with the device in alarm. (Reference 3.1, Section F.12)

Hose stations and portable extinguishers are provided just outside this Fire Area, as indicated on drawing A-1802. (Reference 3.1, Section F.12)

This area is accessible through a door at the south end of the room.

Adequate floor drains (3 total) are provided in the area to remove hose station discharge without appreciable accumulation. The drains discharge to the Fuel Building sump in Room 6104. The sump is emptied by sump pumps. Refer to drawing series M-12LF for further information on the floor and equipment drain system. (Reference 3.1, Section F.12)

F.3.6 Isolation and Smoke Removal

The fire barriers will contain a fire within the Fire Area until extinguished. Fire dampers will isolate HVAC openings in the fire barriers. Refer to Section 4.3.7.2 for smoke removal discussion.

F.3.7 Analysis

F.3.7.1 Fire Suppression

A fire in the area will be detected and alarmed by the automatic detection system. The fire can be extinguished manually, using hose stations and/or portable extinguishers.

F.3.7.2 Safe Shutdown Capability

There are no PFSSD equipment or circuits in this area, therefore fire damage to this area will not prevent safe shutdown. This, coupled with the defense in depth fire protection features and administrative controls for the Fire Area, provides reasonable assurance that 10 CFR Part 20 radiation limits will not be exceeded due to a fire in F-3.

ATTACHMENT B
FIRE HAZARD ANALYSIS
(Page 201 of 250)

Fire Area F-4 (Reference A-1803)

F.4.1 Fire Area Description

Air Handling Equipment Room 6203, El. 2026.

F.4.2 Major Equipment

Fuel Building supply air units, Fuel Building heating coil unit, fuel handling area cooling coil.

F.4.3 Design Features

This Fire Area is separated from all other Fire Areas by fire barrier construction and penetration closure assemblies (structural steel fireproofing, fire doors, fire dampers, and penetration seals) that satisfy at least one of the following criteria:

- Are directly qualified by 3-hour fire endurance testing in accordance with criteria of the applicable controlling standard (ASTM E-119, ASTM E-152, UL-10B, UL-555, or IEEE-634) for the respective barrier assembly protective feature.
- Have been evaluated as providing an equivalent level of protection.
- Have been evaluated as providing protection commensurate with the fire hazards present.

Table F.4.3-1 identifies fire barrier features within the Fire Area that are unique or not directly bounded by fire endurance testing. These features are evaluated within M 663-00017A or an appropriate document referenced within M 663-00017A. These evaluations determined that each unique or unbounded fire barrier feature will prevent fire propagation from one Fire Area to another, and will not adversely impact PFSSD equipment or circuits within an adjacent Fire Area.

Table F.4.3-1
Fire Area F-4, Unique or Unbounded Fire Barrier Features

Unique or Unbounded Feature	M-663-00017A Closure Component Category
Penetration seals that exceed the bounding limitations of M-663-00017	Penetration Seal
Structural Steel Fireproofing with unprotected thermal shorts	Structural Steel Fireproofing

F.4.4 Combustible Loading

The cumulative combustible loading classification for Fire Area F-4 is Low. (Reference 3.1, Section F.12)

F.4.5 Fire Protection

An automatic smoke detection system is installed in this area. Manual-pull fire alarm stations are located near the exit doorways from the Fuel Building. Detector or pull station activation results in local fire alarm notification appliance operation and annunciation within the Control Room. The Control Room annunciation of a detection or pull station alarm is point addressable for a quick and easy means to identify the location associated with the device in alarm. (Reference 3.1, Section F.12)

A hose station and portable extinguishers are provided within this Fire Area. If access to these is blocked by a fire within the area, the hose station and portable extinguishers in Room 1408 of the Auxiliary Building can be used. (Reference 3.1, Section F.12)

This area is accessible through doors from the adjacent room and from the Auxiliary Building (Room 1408).

Adequate floor drains (3 total) are provided in the area to remove hose station discharge without appreciable accumulation. The drains discharge to the Fuel Building sump in Room 6104. The sump is emptied by sump pumps. Refer to drawing series M-12LF for further information on the floor and equipment drain system. (Reference 3.1, Section F.12)

F.4.6 Isolation and Smoke Removal

The fire barriers will contain a fire within the Fire Area until extinguished. Fire dampers will isolate HVAC openings in the fire barriers. Refer to Section 4.3.7.2 for smoke removal discussion.

F.4.7 Analysis

F.4.7.1 Fire Suppression

A fire in this area will be detected and alarmed by the automatic detection system. The fire can be extinguished manually, using hose stations and/or portable extinguishers.

F.4.7.2 Safe Shutdown Capability

As applicable, XX-E-013 identifies electrical PFSSD equipment located within the Fire Area, while E-15000 identifies PFSSD circuits. The detailed PFSSD analysis for the Fire Area is provided in E-1F9910. The analysis demonstrates that a success path of PFSSD equipment, unaffected by an F-4 fire, remains available for achieving and maintaining hot standby and ultimately, transition to cold shutdown, if necessary. Therefore, a fire within Fire Area F-4 will not prevent safe shutdown of the plant. This, coupled with the defense in depth fire protection features and administrative controls for the Fire Area, provides reasonable assurance that 10 CFR Part 20 radiation limits will not be exceeded due to a fire in F-4.

ATTACHMENT B
FIRE HAZARD ANALYSIS
(Page 203 of 250)

Fire Area F-5 (Reference A-1803)

F.5.1 Fire Area Description

Electrical Equipment Room 6202, El. 2026.

F.5.2 Major Equipment

Load centers and motor control centers.

F.5.3 Design Features

This Fire Area is separated from all other Fire Areas by fire barrier construction and penetration closure assemblies (structural steel fireproofing, fire doors, fire dampers, and penetration seals) that satisfy at least one of the following criteria:

- Are directly qualified by 3-hour fire endurance testing in accordance with criteria of the applicable controlling standard (ASTM E-119, ASTM E-152, UL-10B, UL-555, or IEEE-634) for the respective barrier assembly protective feature.
- Have been evaluated as providing an equivalent level of protection.
- Have been evaluated as providing protection commensurate with the fire hazards present.

Table F.5.3-1 identifies fire barrier features within the Fire Area that are unique or not directly bounded by fire endurance testing. These features are evaluated within M 663-00017A or an appropriate document referenced within M 663-00017A. These evaluations determined that each unique or unbounded fire barrier feature will prevent fire propagation from one Fire Area to another, and will not adversely impact PFSSD equipment or circuits within an adjacent Fire Area.

Table F.5.3-1
Fire Area F-5, Unique or Unbounded Fire Barrier Features

Unique or Unbounded Feature	M-663-00017A Closure Component Category
Penetration seals that exceed the bounding limitations of M-663-00017	Penetration Seal
Structural Steel Fireproofing with unprotected thermal shorts	Structural Steel Fireproofing

F.5.4 Combustible Loading

The cumulative combustible loading classification for Fire Area F-5 is Low. (Reference 3.1, Section F.12)

ATTACHMENT B
FIRE HAZARD ANALYSIS
(Page 204 of 250)

F.5.5 Fire Protection

An automatic smoke detection system is installed in this area. Manual-pull fire alarm stations are located near the exit doorways from the Fuel Building. Detector or pull station activation results in local fire alarm notification appliance operation and annunciation within the Control Room. The Control Room annunciation of a detection or pull station alarm is point addressable for a quick and easy means to identify the location associated with the device in alarm. (Reference 3.1, Section F.12)

A portable extinguisher is provided in this Fire Area and hose stations and portable extinguishers are provided just outside this Fire Area, as indicated on drawing A-1803. (Reference 3.1, Section F.12)

The area is accessible through double doors in the north and south walls of the area.

Adequate floor drains (2 total) are provided in the area to remove hose station discharge without appreciable accumulation. The drains discharge to the Fuel Building sump in Room 6104. The sump is emptied by sump pumps. Refer to drawing series M-12LF for further information on the floor and equipment drain system. (Reference 3.1, Section F.12)

F.5.6 Isolation and Smoke Removal

The fire barriers will contain a fire within the Fire Area until extinguished. Fire dampers will isolate HVAC openings in the fire barriers. Refer to Section 4.3.7.2 for smoke removal discussion.

F.5.7 Analysis

F.5.7.1 Fire Suppression

A fire in this area will be detected and alarmed by the automatic detection system. The fire can be extinguished manually, using hose stations and/or portable extinguishers.

F.5.7.2 Safe Shutdown Capability

As applicable, XX-E-013 identifies electrical PFSSD equipment located within the Fire Area, while E-15000 identifies PFSSD circuits. The detailed PFSSD analysis for the Fire Area is provided in E-1F9910. The analysis demonstrates that a success path of PFSSD equipment, unaffected by an F-5 fire, remains available for achieving and maintaining hot standby and ultimately, transition to cold shutdown, if necessary. Therefore, a fire within Fire Area F-5 will not prevent safe shutdown of the plant. This, coupled with the defense in depth fire protection features and administrative controls for the Fire Area, provides reasonable assurance that 10 CFR Part 20 radiation limits will not be exceeded due to a fire in F-5.

ATTACHMENT B
FIRE HAZARD ANALYSIS
(Page 205 of 250)

Fire Area F-6 (Reference A-1804)

F.6.1 Fire Area Description

Emergency Exhaust Equipment Room 6304 (east), El. 2047-6.

F.6.2 Major Equipment

Emergency exhaust filter/adsorber unit and emergency exhaust fan.

F.6.3 Design Features

This Fire Area is separated from all other Fire Areas by fire barrier construction and penetration closure assemblies (structural steel fireproofing, fire door, fire dampers, and penetration seals) that satisfy at least one of the following criteria:

- Are directly qualified by 3-hour fire endurance testing in accordance with criteria of the applicable controlling standard (ASTM E-119, ASTM E-152, UL-10B, UL-555, or IEEE-634) for the respective barrier assembly protective feature.
- Have been evaluated as providing an equivalent level of protection.
- Have been evaluated as providing protection commensurate with the fire hazards present.

Table F.6.3-1 identifies fire barrier features within the Fire Area that are unique or not directly bounded by fire endurance testing. These features are evaluated within M 663-00017A or an appropriate document referenced within M 663-00017A. These evaluations determined that each unique or unbounded fire barrier feature will prevent fire propagation from one Fire Area to another, and will not adversely impact PFSSD equipment or circuits within an adjacent Fire Area.

Table F.6.3-1
Fire Area F-6, Unique or Unbounded Fire Barrier Features

Unique or Unbounded Feature	M-663-00017A Closure Component Category
Penetration seals that exceed the bounding limitations of M-663-00017	Penetration Seal
Structural Steel Fireproofing with unprotected thermal shorts	Structural Steel Fireproofing

F.6.4 Combustible Loading

The cumulative combustible loading classification for Fire Area F-6 is Low. (Reference 3.1, Section F.12)

ATTACHMENT B
FIRE HAZARD ANALYSIS
(Page 206 of 250)

F.6.5 Fire Protection

An automatic smoke detection system is installed in this area. Manual-pull fire alarm stations are located near the exit doorways from the Fuel Building. Detector or pull station activation results in local fire alarm notification appliance operation and annunciation within the Control Room. The Control Room annunciation of a detection or pull station alarm is point addressable for a quick and easy means to identify the location associated with the device in alarm. (Reference 3.1, Section F.12)

Hose stations and portable extinguishers are provided just outside this Fire Area, as indicated on drawing A-1804. (Reference 3.1, Section F.12)

The emergency exhaust filter adsorber unit does not normally operate. Downstream of the charcoal bed is a thermistor-type continuous thermal detector, which alarms in the Control Room at high air stream temperature. This unit is equipped with a hose connection to provide manual water spray protection.

Access to this area is through a door at the south end of the room.

Adequate floor drains (3 total) are provided in the area to remove hose station discharge without appreciable accumulation. The drains discharge to the Fuel Building sump in Room 6104. The sump is emptied by sump pumps. Refer to drawing series M-12LF for further information on the floor and equipment drain system. (Reference 3.1, Section F.12)

F.6.6 Isolation and Smoke Removal

The fire barriers will contain a fire within the Fire Area until extinguished. Fire dampers will isolate HVAC openings in the fire barriers. Refer to Section 4.3.7.2 for smoke removal discussion.

F.6.7 Analysis

F.6.7.1 Fire Suppression

A fire in this area will be detected and alarmed by the automatic detection system. The fire can be extinguished manually, using hose stations and/or portable extinguishers.

F.6.7.2 Safe Shutdown Capability

This area contains no PFSSD equipment or circuits and is separated from adjoining Fire Areas by fire barrier construction. Therefore, a fire within Fire Area F-6 will not prevent safe shutdown of the plant. This, coupled with the defense in depth fire protection features and administrative controls for the Fire Area, provides reasonable assurance that 10 CFR Part 20 radiation limits will not be exceeded due to a fire in F-6.

ATTACHMENT B
FIRE HAZARD ANALYSIS
(Page 207 of 250)

Fire Area F-7 (Reference A-1804)

F.7.1 Fire Area Description

Emergency Exhaust Equipment Room 6303 (west), El. 2047-6.

F.7.2 Major Equipment

Emergency exhaust filter/adsorber unit and emergency exhaust fan.

F.7.3 Design Features

This Fire Area is separated from all other Fire Areas by fire barrier construction and penetration closure assemblies (structural steel fireproofing, fire door, fire dampers, and penetration seals) that satisfy at least one of the following criteria:

- Are directly qualified by 3-hour fire endurance testing in accordance with criteria of the applicable controlling standard (ASTM E-119, ASTM E-152, UL-10B, UL-555, or IEEE-634) for the respective barrier assembly protective feature.
- Have been evaluated as providing an equivalent level of protection.
- Have been evaluated as providing protection commensurate with the fire hazards present.

Table F.7.3-1 identifies fire barrier features within the Fire Area that are unique or not directly bounded by fire endurance testing. These features are evaluated within M 663-00017A or an appropriate document referenced within M 663-00017A. These evaluations determined that each unique or unbounded fire barrier feature will prevent fire propagation from one Fire Area to another, and will not adversely impact PFSSD equipment or circuits within an adjacent Fire Area.

Table F.7.3-1
Fire Area F-7, Unique or Unbounded Fire Barrier Features

Unique or Unbounded Feature	M-663-00017A Closure Component Category
Penetration seals that exceed the bounding limitations of M-663-00017	Penetration Seal
Structural Steel Fireproofing with unprotected thermal shorts	Structural Steel Fireproofing

F.7.4 Combustible Loading

The cumulative combustible loading classification for Fire Area F-7 is Low. (Reference 3.1, Section F.12)

ATTACHMENT B
FIRE HAZARD ANALYSIS
(Page 208 of 250)

F.7.5 Fire Protection

An automatic smoke detection system is installed in this area. Manual-pull fire alarm stations are located near the exit doorways from the Fuel Building. Detector or pull station activation results in local fire alarm notification appliance operation and annunciation within the Control Room. The Control Room annunciation of a detection or pull station alarm is point addressable for a quick and easy means to identify the location associated with the device in alarm. (Reference 3.1, Section F.12)

Hose stations and portable extinguishers are provided just outside this Fire Area, as indicated on drawing A-1804. (Reference 3.1, Section F.12)

The emergency exhaust filter adsorber unit does not normally operate. Downstream of the charcoal bed is a thermistor-type continuous thermal detector, which alarms in the Control Room at high air stream temperature. This unit is equipped with a hose connection to provide manual water spray protection.

Access to this area is through a door at the south end of the room.

Adequate floor drains (3 total) are provided in the area to remove hose station discharge without appreciable accumulation. The drains discharge to the Fuel Building sump in Room 6104. The sump is emptied by sump pumps. Refer to drawing series M-12LF for further information on the floor and equipment drain system. (Reference 3.1, Section F.12)

F.7.6 Isolation and Smoke Removal

The fire barriers will contain a fire within the Fire Area until extinguished. Fire dampers will isolate HVAC openings in the fire barriers. Refer to Section 4.3.7.2 for smoke removal discussion.

F.7.7 Analysis

F.7.7.1 Fire Suppression

A fire in this area will be detected and alarmed by the automatic detection system. The fire can be extinguished manually, using hose stations and/or portable extinguishers.

F.7.7.2 Safe Shutdown Capability

As applicable, XX-E-013 identifies electrical PFSSD equipment located within the Fire Area, while E-15000 identifies PFSSD circuits. The detailed PFSSD analysis for the Fire Area is provided in E-1F9910. The analysis demonstrates that a success path of PFSSD equipment, unaffected by an F-7 fire, remains available for achieving and maintaining hot standby and ultimately, transition to cold shutdown, if necessary. Therefore, a fire within Fire Area F-7 will not prevent safe shutdown of the plant. This, coupled with the defense in depth fire protection features and administrative controls for the Fire Area, provides reasonable assurance

ATTACHMENT B
FIRE HAZARD ANALYSIS
(Page 209 of 250)

that 10 CFR Part 20 radiation limits will not be exceeded due to a fire in F-7.

ATTACHMENT B
FIRE HAZARD ANALYSIS
(Page 210 of 250)

Fire Area HMS-1 (Reference A-1802)

HMS.1.1 Fire Area Description

Hot Machine Shop Rooms 1332, 1333, and 1334.

HMS.1.2 Major Equipment

Decontamination equipment, laboratory equipment, and machine tools.

HMS.1.3 Design Features

This Fire Area is separated from all other Fire Areas by fire barrier construction and penetration closure assemblies (fire door, fire dampers, and penetration seals) that satisfy at least one of the following criteria:

- Are directly qualified by 3-hour fire endurance testing in accordance with criteria of the applicable controlling standard (ASTM E-119, ASTM E-152, UL-10B, UL-555, or IEEE-634) for the respective barrier assembly protective feature.
- Have been evaluated as providing an equivalent level of protection.
- Have been evaluated as providing protection commensurate with the fire hazards present.

Table HMS.1.3-1 identifies fire barrier features within the Fire Area that are unique or not directly bounded by fire endurance testing. These features are evaluated within M 663-00017A or an appropriate document referenced within M 663-00017A. These evaluations determined that each unique or unbounded fire barrier feature will prevent fire propagation from one Fire Area to another, and will not adversely impact PFSSD equipment or circuits within an adjacent Fire Area.

Table HMS.1.3-1
Fire Area HMS-1, Unique or Unbounded Fire Barrier Features

Unique or Unbounded Feature	M-663-00017A Closure Component Category
Missile door 13331	Fire Door
Trench cover panels	Fire Barrier

The structural steel of the Hot Machine Shop is not structurally tied into the Auxiliary Building. The ceiling of this area is the building roof, and the building floor is on grade with the exception of the pipe chase communicating with Fire Area F-2. Consequently, only the building walls and the concrete trench cover plugs provide fire boundary protection.

HMS.1.4 Combustible Loading

The cumulative combustible loading classification for Fire Area HMS-1 is Low.

ATTACHMENT B
FIRE HAZARD ANALYSIS
(Page 211 of 250)

HMS.1.5 Fire Protection

An automatic smoke detection system is installed in this area. Manual-pull fire alarm stations are located near the exit doorways from this area. Detector or pull station activation results in local fire alarm notification appliance operation and annunciation within the Control Room. The Control Room annunciation of a detection or pull station alarm is point addressable for a quick and easy means to identify the location associated with the device in alarm.

The combustible loading in the Hot Machine Shop is low. The Hot Machine Shop is not a safety-related area and is separated from adjacent safety-related areas by fire barrier construction. Therefore, an automatic sprinkler system is not provided for the Hot Machine Shop.

A hose station and portable extinguishers are provided within this Fire Area, as indicated on drawing A-1802.

Access to this area is through the exterior door in the west wall or through the interior doors at the north wall.

Adequate floor drains are provided in the area to remove hose station discharge without appreciable accumulation. Refer to drawing series M-12LF for further information on the floor and equipment drain system.

HMS.1.6 Isolation and Smoke Removal

The fire barriers will contain a fire within the Fire Area until extinguished. Fire dampers will isolate HVAC openings in the fire barriers. Refer to Section 4.3.7.2 for smoke removal discussion.

HMS.1.7 Analysis

HMS.1.7.1 Fire Suppression

A fire in this area will be detected and alarmed by the automatic detection system. The fire can be extinguished manually, using the hose station and/or portable extinguishers.

HMS.1.7.2 Safe Shutdown Capability

This area contains no PFSSD equipment or circuits and is separated from adjoining Fire Areas by fire barrier construction. Therefore, a fire within Fire Area HMS-1 will not prevent safe shutdown of the plant. This, coupled with the defense in depth fire protection features and administrative controls for the Fire Area, provides reasonable assurance that 10 CFR Part 20 radiation limits will not be exceeded due to a fire in HMS-1.

ATTACHMENT B
FIRE HAZARD ANALYSIS
(Page 212 of 250)

Fire Area RB (Reference A-1801 through A-1804)

RB.1 Fire Area Description

Reactor Building (Containment).

RB.2 Major Equipment

Reactor coolant pumps, steam generators, reactor, pressurizer, regenerative heat exchanger, reactor coolant drain tank and pumps, pressurizer relief tank, accumulator tanks excess letdown heat exchanger, cavity cooling fans, rod positioning indicator cabinets, incore instrumentation drive units, hydrogen recombiners, CRDM cooling fans, hydrogen mixing fans, dry waste compactor, polar crane, RCP lube oil drain tanks, containment coolers

RB.3 Design Features

This Fire Area is separated from all other Fire Areas by fire barrier construction and penetration closure assemblies (fire doors, fire dampers, and penetration seals) that satisfy at least one of the following criteria:

- Are directly qualified by 3-hour fire endurance testing in accordance with criteria of the applicable controlling standard (ASTM E-119, ASTM E-152, UL-10B, UL-555, or IEEE-634) for the respective barrier assembly protective feature.
- Have been evaluated as providing an equivalent level of protection.
- Have been evaluated as providing protection commensurate with the fire hazards present.

Table RB.3-1 identifies fire barrier features within the Fire Area that are unique or not directly bounded by fire endurance testing. These features are evaluated within M 663-00017A or an appropriate document referenced within M 663-00017A. These evaluations determined that each unique or unbounded fire barrier feature will prevent fire propagation from one Fire Area to another, and will not adversely impact PFSSD equipment or circuits within an adjacent Fire Area.

Table RB.3-1
Fire Area RB, Unique or Unbounded Fire Barrier Features

Unique or Unbounded Feature	M-663-00017A Closure Component Category
Flanges for encapsulated valve tanks	Fire Barrier
Reactor Building personnel hatch	Hatch
Radiant energy shield fire wrap	Fire Wrap
Electrical penetrations	Penetration Seal
Mechanical penetrations	Penetration Seal
Fuel transfer tube penetration	Penetration Seal

ATTACHMENT B
FIRE HAZARD ANALYSIS
(Page 213 of 250)

The 4-foot-thick Reactor Building walls serve as the fire barrier separation from adjacent buildings. There are no physical boundaries enclosing localized fire hazards within the Reactor Building. However, for purposes of this analysis, the Reactor Building is divided in the following zones as delineated on drawings A-1801 through A-1804.

Zone No.	Area
RB-1	Area within the secondary shield wall
RB-2	Area outside the secondary shield wall - El. 2000
RB-3	North electrical penetration area - El. 2026
RB-4	South electrical penetration area - El. 2026
RB-5	Cable tray area - El. 2047'-6"
RB-6	Reactor building - El. 2068'-8"
RB-7	West area - El. 2026
RB-8	East area - El. 2026
RB-9	Tendon access gallery area
RB-10	Reactor building - El. 2047'-6" areas, except cable tray area
RB-11	Area within primary shield wall

RB.4 Combustible Loading

The cumulative combustible loading classification for Fire Area RB is Low.

RB.5 Fire Protection

Linear heat detection is installed above each reactor coolant pump and in areas where cable trays are concentrated. Duct smoke detection is provided for each containment cooler. Manual-pull fire alarm stations are located near hose stations. Detector or pull activation alarms locally and in the Control Room. The Control Room alarms are zoned for quick identification of the area in alarm. (Reference 3.1, Section F.1a))

Portable extinguishers and manual hose stations are permanently installed inside the Reactor Building as shown on drawings A-1801 through A-1804. The hose stations are spaced at no more than 100-foot intervals. The hose station locations are such that all accessible areas of the Reactor Building are adequately covered by at least one hose stream. A fire at any hose station may be extinguished by using an adjacent hose station. An extra length of hose can be added, if required, to the adjacent hose station. (Reference 3.1, Section F.1b))

A fixed, manually charged, closed head sprinkler system is provided over the cable trays in Zones RB-3 and RB-4. A manual system is installed to prevent an inadvertent actuation of the sprinklers during normal plant operation. To protect the chloride sensitive piping and equipment from fire protection system leakage, the standpipes inside the Reactor Building are also normally dry. (Reference 3.1, Section F.1.a))

ATTACHMENT B
FIRE HAZARD ANALYSIS
(Page 214 of 250)

All fire water system piping within the Reactor Building is maintained dry by two normally closed isolation valves located in series on the same supply line. The motor operated isolation valve (KCHV0253) can be operated from the Control Room while the manual valve (KCV0427) can be manipulated locally in Room 1322. Opening both of these valves will charge fire water system piping within the Reactor Building, including the two sprinkler systems. All the isolation valves associated with the standpipe and sprinkler system are electrically supervised.

The fire protection supply piping to the Reactor Building is protected from the effects of a single active failure. The inside Containment isolation valve is a check valve which is highly reliable by design and considered exempt from active failures due to the lack of any external electrical signals which may be disabled due to a fire inside the containment. Refer to USAR Section 3.1.1 for a discussion of the single failure criteria. Even though a fire inside the Containment would not disable the outside isolation valve, a random failure of the outside valve may be postulated with a fire inside the Containment. In this case, the accessibility of the outside isolation valve is not impaired, and the valve may be operated manually.

The Containment atmospheric control filter-adsorber units are provided with a thermistor-type continuous detector which alarms in the Control Room on high airstream temperature downstream of the charcoal bed. The charcoal beds are equipped with a hose connection to provide manual water spray protection.

A system is provided to collect and contain lubricating oil for each reactor coolant pump (RCP). The RCP oil spillage protection and control system consists of a package of splash guards, catch basins, and enclosure assemblies as attachments to the RCP motors at strategic locations to preclude the possibility of oil making contact with hot components and pipe. High pressure portions of the lube oil system are totally enclosed with low point drain connections. Low pressure portions of the system are provided with drip pans with low point connections. Remote lube oil fill lines for the upper and lower bearing reservoirs on each reactor coolant pump motor are not protected by drip pans. Due to the design of the fill lines, no lube oil leakage is postulated. The RTD Conduit Boxes (3 per motor) are not provided with drip pans, however, conduit seals and leak tight fittings are used to minimize lube oil leakage. Oil leakage at the RDT Conduit Box does not represent a fire hazard. (Reference 3.1, Section F.1.a) and Reference 3.2, Section III.O)

Low points of the collection systems are piped to two collection tanks (each tank serves two RCPs) located in the Reactor Building as shown on Figure RB.5-1. Each of the two oil collection tanks has a capacity of 311 gallons (usable), compared to 265 gallons of oil in the lube oil system of each pump. It is unlikely that common failure would occur that would cause the entire inventory of oil in two RCP motors to leak out. The collection tanks are provided with level indication and high level alarm in the Control Room. Therefore, the plant operators would have an early indication of a significant oil leak and could initiate corrective action. The tanks are manually drained as required. Should leakage exceed collection tank capacity before corrective actions are completed, the tank would overflow onto the Containment floor. Any such leakage would flow to the containment normal sumps via the drainage trenches located adjacent to the tanks (see drawing M-1G022). This oil would not come into contact with hot surfaces and create a fire hazard. (Reference 3.1, Section F.1.a) and Reference 3.2, Section III.O)

ATTACHMENT B
FIRE HAZARD ANALYSIS
(Page 215 of 250)

The tanks are constructed to the requirements of ASME Section VIII and have flame arrestors on the vents. The drain piping is ANSI B31.1. The tanks and piping are seismically supported in accordance with the requirements of Paragraph C.2 of Regulatory Guide 1.29. Additionally, the oil collection tanks were sized to accommodate any reasonable amount of leakage that might result from an SSE. The oil collection devices mounted on the RCPs have been seismically analyzed and qualified in accordance with the requirements of Paragraph C.2 of Regulatory Guide 1.29. (Reference 3.1, Section F.1.a) and Reference 3.2, Section III.O)

Refer to drawing M-12LF09 for a piping and instrument diagram of the RCP lube oil collection system. The location of cable trays in the vicinity of the reactor coolant pumps is identified in Figure RB.5-1. (Reference 3.1, Section F.1.a) and Reference 3.2, Section III.O)

Access to the Containment is via the personnel hatch at El. 2047 feet 6 inches. This hatch opens to Room 1507 of the Auxiliary building. For access to Room 1507, see Fire Area A-20. An emergency personnel hatch for evacuation purposes is located at El. 2013 feet 5 inches. The hatch opens to a stairway leading to the outside grade elevation. The tendon access gallery can be reached from a hatch at the outside grade at El. 2000 leading to the tendon gallery access shaft, and through door 21011 at El. 1974 of Fire Area A-1. Stairways and one elevator are located at Zone RB-2, as shown on drawing A-1802, and provide access to all elevations up to 2068 feet 8 inches.

Self-contained breathing apparatus are available for use inside Containment. They are stored near the entrance to the RCA. (Reference 3.1, Section F.1.b)

Adequate drainage capability exists in the Reactor Building to prevent the accumulation of fire-fighting water. Refer to drawing series M-12LE and M-12LF and for further information on the drain systems applicable to the Reactor Building.

RB.6 Isolation and Smoke Removal

A fire within the reactor building will be contained by the fire barriers until extinguished. Smoke may be removed by the containment purge system. Refer to Section 4.3.7.2 for smoke removal discussion.

RB.7 Analysis

RB.7.1 Fire Suppression

The automatic detection system, above the reactor coolant pumps, over areas where cable trays are concentrated and in the containment cooling system ducts, will alarm in the Control Room upon detection of a fire. The standpipes and sprinkler systems are manually charged by a combination of Control Room and local action to open the two normally closed isolation valves for Containment fire water supply. A fire in the cable trays at zones RB-3 or RB-4 would be suppressed by the respective sprinkler system. A fire can be extinguished manually, using the portable extinguishers and/or the hose stations.

ATTACHMENT B
FIRE HAZARD ANALYSIS
(Page 216 of 250)

The reactor coolant pumps are approximately 50 feet apart and a totally enclosed system to collect and contain the lube oil is provided for each pump. An oil fire is not postulated since this would require a failure in the pump lube oil system and another failure in the lube oil collection system in combination with the presence of an ignition source. Any major maintenance work on the pumps will require a plant shutdown. Therefore, an introduction of transient combustibles into this zone during normal plant operation is not postulated. The reactor coolant pumps are not required for a safe shutdown. For these reasons, an automatic suppression system is not provided to extinguish an oil fire in this zone.

The probability of a fire occurrence is greater during refueling and maintenance operations, when transient combustibles could be in the Reactor Building. However, the area would be occupied, and any potential fire would be quickly detected. Again, fire fighting could be performed manually using the hose stations and extinguishers shown on drawings A-1801 through 1804.

RB.7.2 Safe Shutdown Capability

As applicable, XX-E-013 identifies electrical PFSSD equipment located within the Fire Area, while E-15000 identifies PFSSD circuits. The detailed PFSSD analysis for the Fire Area is provided in E-1F9910. The analysis demonstrates that a success path of PFSSD equipment, unaffected by an RB fire, remains available for achieving and maintaining hot standby and ultimately, transition to cold shutdown, if necessary. Additionally, PFSSD manual actions for a fire in this area were evaluated as feasible within E-1F9900. Therefore, a fire within Fire Area RB will not prevent safe shutdown of the plant. This, coupled with the defense in depth fire protection features and administrative controls for the Fire Area, provides reasonable assurance that 10 CFR Part 20 radiation limits will not be exceeded due to a fire in RB.

ATTACHMENT B
FIRE HAZARD ANALYSIS
(Page 217 of 250)

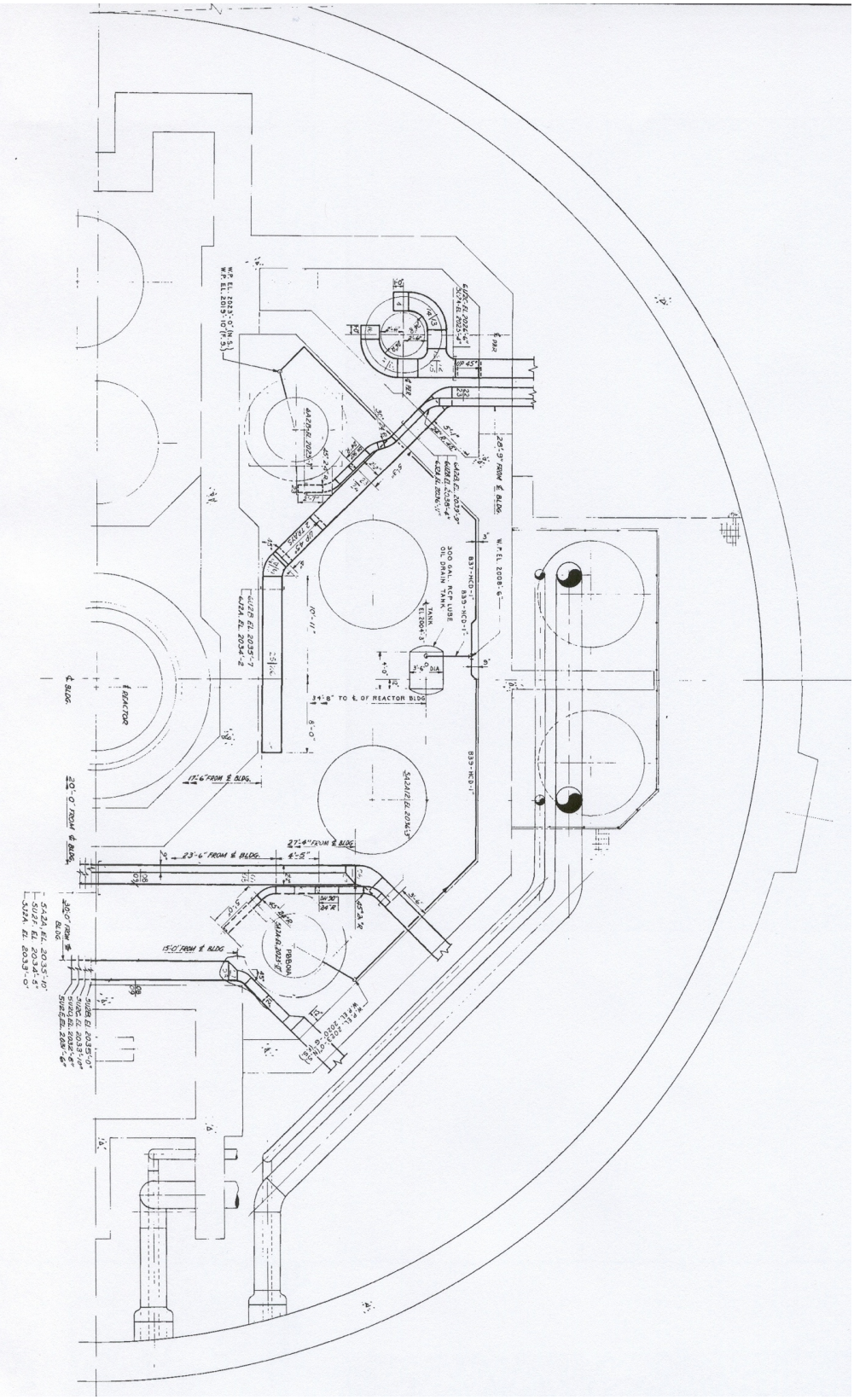
W.P. EL. 2033'-0" (N.S.)
W.P. EL. 2013'-10" (P.S.)
6U2C EL. 2024'-4"
5U2C EL. 2023'-4"
6U2C EL. 2024'-4"
5U2C EL. 2023'-4"
4U2F EL. 2023'-4"
6U2A EL. 2024'-4"
5U2A EL. 2023'-4"
6U2A EL. 2024'-4"
5U2A EL. 2023'-4"
6U2E EL. 2024'-2"
5U2E EL. 2023'-2

ATTACHMENT B
FIRE HAZARD ANALYSIS
(Page 218 of 250)

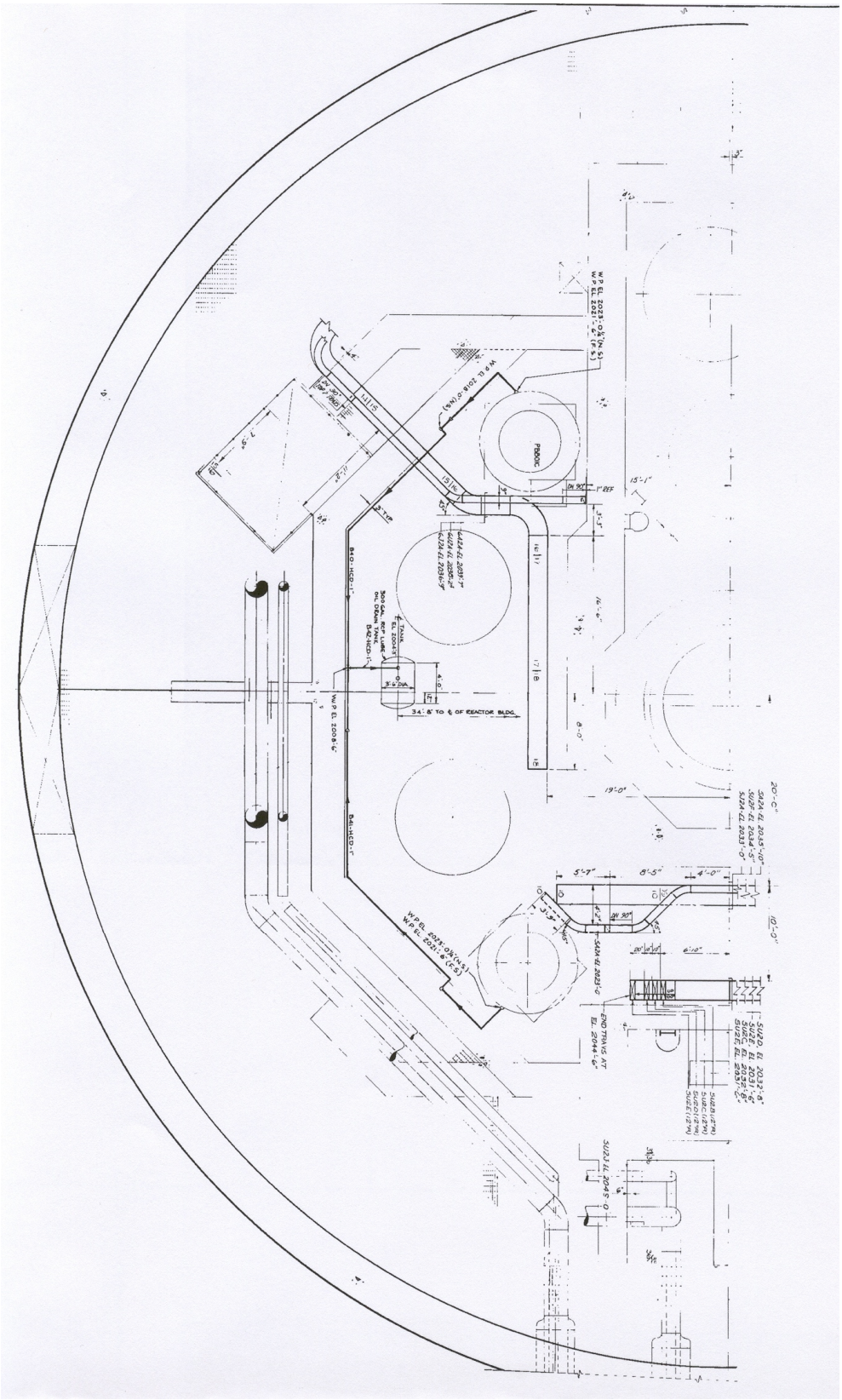

Figure RB.5-1 (Cont'd), RCP Cable Trays in Proximity to RCPs

ATTACHMENT B
FIRE HAZARD ANALYSIS
(Page 219 of 250)

Fire Area RW (Reference A-1801 through A-1804, A-1347 through A-1350, and Z007A-M-0008)

Note:
The RW FHA encompasses the Fire Areas identified as RW A, RW B, and RW C in E-15000.

RW.1 Fire Area Description

Entire Radwaste Building and Radwaste Storage Building – Rooms 7101, 7102, 7103, 7104, 7105, 7106, 7107, 7108, 7109, 7110, 7111, 7112, 7113, 7114, 7115, 7116, 7117, 7118, 7119, 7120, 7121, 7122, 7123, 7124, 7125, 7126, 7127, 7128, 7129, 7130, 7131, 7132, 7135, 7201, 7202, 7203, 7204, 7205, 7206, 7207, 7208, 7209, 7210, 7211, 7212, 7213, 7214, 7215, 7216, 7217, 7218, 7219, 7220, 7221, 7222, 7223, 7224, 7225, 7226, 7227, 7228, 7229, 7230, 7231, 7232, 7233, 7301, 7302, 7303, 7304, 73057401, 7402, 7403, 7404, 7405, 7406, 7407, 7408, 7409, 7410, 7411, 7413, 7501, 7502, 7503, and 7504.

RW.2 Major Equipment

SG blowdown surge tank, SG blowdown surge pumps, aux steam condensate recovery tank, Aux steam condensate transfer pumps, gas decay tanks, catalytic hydrogen recombiner, waste gas compressors, floor drain tanks, floor drain pumps, waste hold-up tank, waste evaporator feed pump, thb04, chemical drain tank, chemical drain pump, waste evaporator condensate tank, waste evaporator condensate pump, waste monitor tank, waste monitor pump, re-cycle hold-up tanks, recycle evaporator feed pumps, primary waste evaporator bottoms tank, gas analyzer racks, oil water separator, radiation monitors, oil water separator pumps, load centers, motor control centers, solidification control cabinet, SLWS monitor tanks, spent resin storage tanks, control room control panels, hold-up tanks, evaporators, fan coil units, equipment hoist radwaste, Radwaste Building exhaust fans, Radwaste Building exhaust filter adsorber unit, SLWS monitor tanks.

RW.3 Design Features

Fire Area RW to RW-1 is not separated by a physical fire barrier boundary. The south end of the Radwaste Tunnel at Column R1 has been established as a theoretical “zone” boundary between RW and RW-1 for analysis purpose only. For life safety purposes, fire barriers are provided for the stairwell enclosures within the Radwaste Building. The Radwaste Building is a concrete structure, while the Radwaste Storage Building is constructed of sheet metal siding over unprotected structural steel. The drum storage building is a combination of concrete and sheet metal construction. Although the majority of the barriers within the Radwaste Building are not credited as fire barriers, they do present a substantial impediment to fire propagation within the structure.

RW.4 Combustible Loading

Calculation XX-X-004 does not maintain a combustible loading classification for Fire Area RW. The predominate combustible hazards associated with this area is that presented by Class A and B radwaste materials that a stored for ultimate processing or disposal.

ATTACHMENT B
FIRE HAZARD ANALYSIS
(Page 220 of 250)

RW.5 Fire Protection

Automatic smoke detectors are installed in the area, except as noted in Attachment A. Manual-pull fire alarm stations are located near exit doorways. Detector or pull station activation results in local fire alarm notification appliance operation and annunciation within the Control Room. The Control Room annunciation of a detection or pull station alarm is point addressable for a quick and easy means to identify the location associated with the device in alarm.

An automatic wet pipe sprinkler system is provided for the Radwaste Storage Building and the Dry Waste Compactor area (Room 7228) of the Radwaste Building.

The charcoal filter adsorber unit is provided with a thermistor-type continuous detector which alarms in the Control Room at high airstream temperature. The adsorber unit is equipped with a hose connection to provide manual water spray protection.

Hose stations and fire extinguishers are strategically located throughout the area.

The area is accessible for firefighting from the exterior and the Radwaste Tunnel.

Floor drains that discharge to the Radwaste Building sump are provided for removal of firefighting water. Refer to drawing series M-12LF for further information on the floor and equipment drain system.

RW.6 Isolation and Smoke Removal

A fire in this area is isolated from the Auxiliary Building by fire barrier construction. Refer to Section 4.3.7.2 for smoke removal discussion.

RW.7 Analysis

RW.7.1 Fire Suppression

A fire in the Radwaste Building will be detected and alarmed by the automatic detection system. A fire in the Radwaste Storage Building will be alarmed following sprinkler system water flow. Fire in the Radwaste Storage Building or Dry Waste Compactor area will be suppressed by the respective automatic sprinkler system. A fire can be extinguished manually, using hose stations and/or portable extinguishers in the event automatic suppression fails, or the fire is located in an area where automatic suppression is not provided.

A filter fire in the charcoal adsorber unit will be extinguished utilizing the manual spray system.

ATTACHMENT B
FIRE HAZARD ANALYSIS
(Page 221 of 250)

RW.7.2 Safe Shutdown Capability

Four hand switches and associated cables are located in fire areas RW and RW-1 that are used to close the Steam Generator blowdown valves BMHV0001 through BMHV0004 in the case of a fire that renders the primary circuit incapable of controlling the valves. In the case of a fire in Fire Area RW or RW-1, the primary circuit will be available to control these valves. Therefore, a fire in this area will not prevent safe shutdown of the plant. This, coupled with the defense in depth fire protection features and administrative controls for the Fire Area, provides reasonable assurance that 10 CFR Part 20 radiation limits will not be exceeded due to a fire in RW.

ATTACHMENT B
FIRE HAZARD ANALYSIS
(Page 222 of 250)

Fire Area RW-1 (Reference A-1801)

RW.1.1 Fire Area Description

Radwaste Pipe Tunnel and Cable Chase to Auxiliary Building (below grade) Rooms 7133 and 7134.

RW.1.2 Major Equipment

Electric cable.

RW.1.3 Design Features

This Fire Area is separated from the Auxiliary Building by fire barrier construction and penetration closure assemblies (structural steel fireproofing, fire doors, fire dampers, and penetration seals) that satisfy at least one of the following criteria:

- Are directly qualified by 3-hour fire endurance testing in accordance with criteria of the applicable controlling standard (ASTM E-119, ASTM E-152, UL-10B, UL-555, or IEEE-634) for the respective barrier assembly protective feature.
- Have been evaluated as providing an equivalent level of protection.
- Have been evaluated as providing protection commensurate with the fire hazards present.

Table RW.1.3-1 identifies fire barrier features within the Fire Area that are unique or not directly bounded by fire endurance testing. These features are evaluated within M 663-00017A or an appropriate document referenced within M 663-00017A. These evaluations determined that each unique or unbounded fire barrier feature will prevent fire propagation from one Fire Area to another, and will not adversely impact PFSSD equipment or circuits within an adjacent Fire Area.

Table RW.1.3-1
Fire Area RW-1, Unique or Unbounded Fire Barrier Features

Unique or Unbounded Feature	M-663-00017A Closure Component Category
Penetration seals that exceed the bounding limitations of M-663-00017	Penetration Seal

The ceiling, floor, and east west side walls of this area are against soil. The fire area is divided into two rooms by a 2-foot-thick concrete wall. Room 7133 is the Nonradioactive Tunnel, while Room 7134 contains radioactive piping.

Ventilation air for the tunnel is provided by transferring air from the Radwaste and Auxiliary Buildings by means of transfer fans. The tunnel is exhausted by Radwaste and Auxiliary Building exhaust systems. More air is exhausted than supplied to prevent exfiltration from the tunnel. Air is supplied to the nonradioactive portion of the tunnel and exhausted from the radioactive side of the tunnel.

ATTACHMENT B
FIRE HAZARD ANALYSIS
(Page 223 of 250)

RW.1.4 Combustible Loading

The cumulative combustible loading classification for Fire Area RW-1 is Low.

RW.1.5 Fire Protection

An automatic smoke detection system is installed in Room 7133. Manual-pull fire alarm stations are located near the exit doorways from adjacent areas. Detector or pull station activation results in local fire alarm notification appliance operation and annunciation within the Control Room. The Control Room annunciation of a detection or pull station alarm is point addressable for a quick and easy means to identify the location associated with the device in alarm. Detection is not installed in the Radioactive Pipe Tunnel (Room 7134) due to low installed combustibles.

Hose stations are not located inside the tunnel since a fire in the tunnel may render them inaccessible. Hose stations, located approximately 30 feet away from either end of the tunnel in the Auxiliary and Radwaste Buildings, are available for manual firefighting. Each hose rack has 75 feet of hose, and the tunnel is approximately 140 feet along. Therefore, all areas of the tunnel are within reach of these hose stations. Portable extinguishers are provided inside and outside of the tunnel. Refer to drawing A-1801 for hose stations and extinguisher locations.

The area is accessible for firefighting from both the north and south ends of the tunnel.

A 4 foot x 4 foot x 4 foot sump with two 50 gpm submersible pumps is located in the Nonradioactive Tunnel midway between the Auxiliary and Radwaste Buildings. The sump pumps discharge to the floor drain tank located in the Radwaste building. The Radioactive Pipe Tunnel has a 3 foot x 3 foot x 3 foot sump, which is connected to the Nonradioactive Tunnel sump by a 4-inch embedded pipe.

RW.1.6 Isolation and Smoke Removal

A fire in this area is isolated from the Auxiliary Building by fire barrier construction. Fire dampers will isolate HVAC openings in the fire barrier communicating with the Auxiliary Building. Refer to Section 4.3.7.2 for smoke removal discussion.

RW.1.7 Analysis

RW.1.7.1 Fire Suppression

Due to the low installed combustibles in the Radioactive Pipe Tunnel and limited credible ignition sources, a fire in this area is not postulated.

A fire in the Nonradioactive Tunnel area will be detected and alarmed by the automatic detection system. The fire can be extinguished manually, using hose stations and/or portable extinguishers.

ATTACHMENT B
FIRE HAZARD ANALYSIS
(Page 224 of 250)

RW.1.7.2 Safe Shutdown Capability

Four hand switches and associated cables are located in fire areas RW and RW-1 that are used to close the Steam Generator blowdown valves BMHV0001 through BMHV0004 in the case of a fire that renders the primary circuit incapable of controlling the valves. In the case of a fire in Fire Area RW or RW-1, the primary circuit will be available to control these valves. Therefore, a fire in this area will not prevent safe shutdown of the plant. This, coupled with the defense in depth fire protection features and administrative controls for the Fire Area, provides reasonable assurance that 10 CFR Part 20 radiation limits will not be exceeded due to a fire in RW-1.

ATTACHMENT B
FIRE HAZARD ANALYSIS
(Page 225 of 250)

Fire Area SBO (Reference M-1G074)

SBO.1 Fire Area Description

Station Blackout (SBO) diesel generator missile shield structure. The concrete structure has four (4) bays. The North and South ends of the bays are open to atmosphere and enclosed with steel grating.

SBO.2 Major Equipment

Three 3250 kW/4063 kVA diesel generator enclosures and one Power Equipment Center (PEC) enclosure. The PEC enclosure contains the switchgear (PB005) for the generator sets and power output to the plant.

SBO.3 Design Features

This Fire Area is outside the protected area and is remote to the power block structures. Due to the spatial separation, there is no exposure hazard to this Fire Area. The missile shield structure is constructed with non-combustible, fire resistive, materials. The structure is comprised of 1-foot thick concrete walls on the ends with 1-foot thick separation walls between the bays. The North and South sides of the building is enclosed with steel grating. The roof has removable concrete shield plugs that are 1-foot thick. The building is lightning protected per NFPA 780. The doors between the bays are 3-hour fire rated. The PEC has 2-hour fire rated walls between the switchgear room and the control room. The wall surrounding the battery room within the PEC is 2-hour fire rated. The diesel driven generator sets and PEC are each housed within an enclosure designed to withstand 150 mph winds. UL Listed double walled fuel tanks are provided with the generator sets. The fuel tanks are equipped with overfill protection. The PEC battery compartment is equipped with redundant hydrogen ventilation fans. The vent fan is started on detection of a 1% hydrogen concentration. An alarm is initiated on detection of a 2% hydrogen level.

SBO.4 Combustible Loading

The cumulative combustible loading classification for Fire Area SBO is High. This area is not a safety related area nor is it adjacent to a safety related area so it is not included in Calculation XX-X-004, Combustible Fire Loading For Each Room In The Various Fire Areas At WCNOC. The following is included for information.

Each individual fuel oil tank for the SBO diesels has a nominal capacity of 6512 gallons. The tank is a UL #142 listed double walled fuel tank. Each Diesel engine contains 104 gallons of lube oil. The PEC has 60 lead acid batteries (LSe450). The overall square footage of the fire area is 6500 sqft. Each individual bay has a square footage of 1625 sqft.

ATTACHMENT B
FIRE HAZARD ANALYSIS
(Page 226 of 250)

Room	Combustible Material	Heat Rate (Btu/lb)	Quantity (gal)	Room Area (sqft)	Load (Btu/sqft)
SBO-A	Diesel Fuel *	20000	6187*	1625	523896
	Lube Oil **	20000	104**	1625	9114
SBO-B	Diesel Fuel *	20000	6187*	1625	523896
	Lube Oil **	20000	104**	1625	9114
SBO-C	Diesel Fuel *	20000	6187*	1625	523896
	Lube Oil **	20000	104**	1625	9114
SBO-E	Batteries Class A	18000	650 lbs	1625	7200
	Misc Class A	18000	~150 lbs	1625	1662

* Specific Gravity of Diesel Fuel – 0.86
** Specific Gravity of lube oil – 0.89

Fire Area	Combustible Material	Heat Rate (Btu/lb)	Quantity (gal)	Room Area (sqft)	Load (Btu/sqft)
SBO	Diesel Fuel *	20000	18561	6500	392922
	Lube Oil **	20000	312	6500	6836
	Misc Class A	18000	750 lbs	6500	2077
				Total	401835

* Specific Gravity of Diesel Fuel – 0.86
** Specific Gravity of lube oil – 0.89

SBO.5 Fire Protection

An automatic heat detection system is installed in the separate diesel enclosures in this fire area. Automatic smoke detection is installed in the PEC enclosure in this fire area. Manual-pull stations are located at exit doors from the three Diesel Generator and PEC enclosures. Detector or pull station activation results in local fire alarm notification appliance operation and annunciation within the WCNOC Control Room.

Attachment A summarizes the automatic detection and suppression coverage provided for this fire area. Specifically, automatic detection coverage is only provided within the three Diesel Generator and PEC enclosures.

Portable extinguishers are located within the three Diesel Generator and PEC enclosures.

Access to this area for manual firefighting is available from outside of the structure at ground level. A fire hydrant and hose house will be installed in the future adjacent to the structure.

The structure is open to the outside on the North and South side through steel grating on each of the four bays of the structure, which will facilitate drainage of firewater.

SBO.6 Isolation and Smoke Removal

There are no mechanical smoke isolation or smoke removal features within the fire area. The structure is open to the outside on the North and South side through steel grating on each of the four bays of the structure, which will facilitate smoke removal due to natural ventilation.

ATTACHMENT B
FIRE HAZARD ANALYSIS
(Page 227 of 250)

SBO.7 Analysis

SBO.7.1 Fire Suppression

The automatic detection system installed in the Diesel Generator and PEC enclosures will provide an early warning of a fire in this area. The fire can be extinguished manually, using hose lines and/or portable extinguishers. Adequate drainage is provided to remove the fire suppression water discharge.

SBO.7.2 Safe Shutdown Capability

There are no cables or components within the SBO fire area that are credited for Post Fire Safe Shutdown (PFSSD).

ATTACHMENT B
FIRE HAZARD ANALYSIS
(Page 228 of 250)

Fire Area T-1 (Reference A-1801 through A-1804, A-1806, A-1807, and A-1812)

T.1.1 Fire Area Description

Turbine Building Stairway Room 4101.

T.1.2 Major Equipment

Electric cable.

T.1.3 Design Features

This Fire Area is separated from the Auxiliary Building by fire barrier construction and penetration closure assemblies (fire doors and penetration seals) that satisfy at least one of the following criteria:

- Are directly qualified by 3-hour fire endurance testing in accordance with criteria of the applicable controlling standard (ASTM E-119, ASTM E-152, UL-10B, UL-555, or IEEE-634) for the respective barrier assembly protective feature.
- Have been evaluated as providing an equivalent level of protection.
- Have been evaluated as providing protection commensurate with the fire hazards present.

Table T.1.3-1 identifies fire barrier features within the Fire Area that are unique or not directly bounded by fire endurance testing. These features are evaluated within M 663-00017A or an appropriate document referenced within M 663-00017A. These evaluations determined that each unique or unbounded fire barrier feature will prevent fire propagation from one Fire Area to another, and will not adversely impact PFSSD equipment or circuits within an adjacent Fire Area.

Table T.1.3-1
Fire Area T-1, Unique or Unbounded Fire Barrier Features

Unique or Unbounded Feature	M-663-00017A Closure Component Category
Missile door 41015	Fire Door
Missile door 41017	Fire Door

Remaining walls of the stairwell enclosure are 2-hour rated.

T.1.4 Combustible Loading

The cumulative combustible loading classification for Fire Area T-1 is Low.

ATTACHMENT B
FIRE HAZARD ANALYSIS
(Page 229 of 250)

T.1.5 Fire Protection

Automatic smoke detection is provided at the top of the stairwell. Manual-pull fire alarm stations are located just outside the doorway at each floor elevation. Detector or pull station activation results in local fire alarm notification appliance operation and annunciation within the Control Room. The Control Room annunciation of a detection or pull station alarm is point addressable for a quick and easy means to identify the location associated with the device in alarm.

Hose stations and portable extinguishers are provided just outside this fire area at each floor elevation.

The area is accessible for fire fighting from each communicating elevation with the Auxiliary Building and Turbine Building.

No drains are provided for this Fire Area, as manual fire water suppression efforts will be minimal, considering the limited combustible loading and equipment in the Fire Area. There are no PFSSD equipment or circuits in this area. There is no PFSSD equipment susceptible to water damage in this area. Therefore, water accumulation in the area would not affect safe shutdown capability.

T.1.6 Isolation and Smoke Removal

The fire barriers will contain a fire within the Fire Area until extinguished. Refer to Section 4.3.7.2 for smoke removal discussion.

T.1.7 Analysis

T.1.7.1 Fire Suppression

A fire in this area will be detected and alarmed by the automatic detection system. The fire can be extinguished manually, using hose stations and/or portable extinguishers.

T.1.7.2 Safe Shutdown Capability

One cable for the trip circuit for the main feedwater pump turbine runs through this Fire Area. This cable needs to function when the MSIV's are rendered incapable of closing due to a fire. For a fire in this area, the MSIV's will function normally. Therefore, a fire in any portion of Fire Area T-1 will not prevent safe shutdown of the plant.

ATTACHMENT B
FIRE HAZARD ANALYSIS
(Page 230 of 250)

Fire Area T-2 (Reference A-1806 through A-0808)

T.2.1 Fire Area Description

Turbine Building - 50 feet north of Auxiliary Building wall. Rooms 4301, 4302, 4303, 4304, 4305, 4306, 4322, 4351, 4401, 4501, and 4504.

T.2.2 Major Equipment

Condenser vacuum pumps, air compressors feedwater heaters, turbine building supply air units, S.G. blowdown flash tank, S.G. blowdown non-regenerative heat exchanger, load centers and motor control centers.

T.2.3 Design Features

This Fire Area is separated from the Auxiliary Building and Fire Areas T-4 and T-10 by fire barrier construction and penetration closure assemblies (fire doors, fire dampers, and penetration seals) that satisfy at least one of the following criteria:

- Are directly qualified by 3-hour fire endurance testing in accordance with criteria of the applicable controlling standard (ASTM E-119, ASTM E-152, UL-10B, UL-555, or IEEE-634) for the respective barrier assembly protective feature.
- Have been evaluated as providing an equivalent level of protection.
- Have been evaluated as providing protection commensurate with the fire hazards present.

Table T.2.3-1 identifies fire barrier features within the Fire Area that are unique or not directly bounded by fire endurance testing. These features are evaluated within M 663-00017A or an appropriate document referenced within M 663-00017A. These evaluations determined that each unique or unbounded fire barrier feature will prevent fire propagation from one Fire Area to another, and will not adversely impact PFSSD equipment or circuits within an adjacent Fire Area.

Table T.2.3-1
Fire Area T-2, Unique or Unbounded Fire Barrier Features

Unique or Unbounded Feature	M-663-00017A Closure Component Category
Blowout panel	Hatch
Emergency escape hatch	Hatch
Missile Shield	Fire Barrier
20” unsealed floor drains from A-23	Fire Barrier
Penetration seals that exceed the bounding limitations of M-663-00017	Penetration Seal

ATTACHMENT B
FIRE HAZARD ANALYSIS
(Page 231 of 250)

The Communication Corridor (Fire Area CC-1) is open to this area at El. 2000 and 2016, but separated from the adjacent Control Building by a fire boundary wall. The turbine lube oil area located approximately 38 feet north of the Auxiliary Building wall consists of two rooms (4308 and 4403), one above the other, which are both enclosed by fire barriers. Due to the fire boundaries for each of these rooms the areas are not considered part of Fire Area T-2. The FHA for Room 4308 is provided in Section T.4.1 (Fire Area T-4), while the FHA for 4403 (Fire Area T-10) is provided in Section T.10.1.

Fire Area T-2 to TURB is not separated by a physical boundary. The 50' point north of the Auxiliary Building wall has been established as a theoretical "zone" boundary between T-2 and TURB for fire hazard analysis purpose only.

A pipe trench extends from the Auxiliary Building wall to the Condenser Pit area. The trench is sloped away from the Auxiliary building.

T.2.4 Combustible Loading

The cumulative combustible loading classification for Fire Area T-2 is Low.

T.2.5 Fire Protection

The T-2 areas below the turbine operating floor (El. 2065') are protected by an automatic detection system, using rate compensated thermal detectors. The detection system alarms locally and in the Control Room and also charges the preaction sprinkler system in the area. The Control Room detection annunciation is zoned for quick identification of the specific area in alarm. Manual-pull fire alarm stations are located near the emergency exit doorways from this area. The pull stations alarm locally and in the Control Room. Control Room annunciation of a pull station alarm is point addressable for a quick and easy means to identify the location associated with the device in alarm.

Hose stations and portable extinguishers are provided throughout this area. Adjacent hose stations are separated by no more than 100 feet.

Automatic preaction sprinkler protection is provided for T-2 areas below the operating floor, El. 2065'. Each of the two systems is charged by actuation of any one of the thermal detectors located in the area protected by that system.

The entire area is readily accessible through several interior and exterior doors and fire-rated stairways.

Adequate floor drains are provided in the Turbine Building area to remove sprinkler and hose station discharge without appreciable accumulation. Refer to drawing series M-12LE for further information on the oily waste drain system.

ATTACHMENT B
FIRE HAZARD ANALYSIS
(Page 232 of 250)

T.2.6 Isolation and Smoke Removal

A fire in this area will be isolated from the Auxiliary Building and Fire Areas T-4 and T-10 by fire barrier construction. Fire dampers will isolate the HVAC ducts from the Auxiliary Building, and Fire Areas T-4 and T-10. The roof of the Turbine Building is fitted with spring loaded vents which are held closed by fusible links. In the event of a fire in the Turbine Building, these vents will open to relieve smoke and heat. The vents are sized to provide 1 square foot of vent area for each 100 square feet of floor area. Refer to Section 4.3.7.2 for additional smoke removal discussion.

T.2.7 Analysis

T.2.7.1 Fire Suppression

A fire in this area will be detected and alarmed by the automatic detection system. The automatic suppression systems will discharge shortly after the automatic alarm signal occurs. In the event of failure of the automatic suppression system or a delay in discharge, the fire can be manually extinguished, using the portable extinguishers, manual hose stations, and/or the manual water spray systems, where provided.

Collapse of the Turbine Building roof or even a Turbine Building roof truss is not credible and is not postulated because of the fire protection provided, low fire loadings above the operating deck of the Turbine Building, and the construction of the roof which meets FM Class I UL Class A requirements. Even though the roof trusses will not collapse, it has been verified that a free-falling roof truss has less energy than tornado missiles considered in the design of safety-related buildings.

Fires on or above the operating deck within the T-2 area would be extinguished manually. The combustible loading above the operating floor is low and administrative controls limit the introduction and storage of transient combustibles on the operating floor. Fires starting on or above the operating floor will not damage the roof or roof trusses. The resultant heat and smoke will be vented through the roof vents.

Fire starting below the operating deck in an open area will be automatically detected and extinguished by an automatic preaction sprinkler system. Therefore, fires below the operating deck within the T-2 area will not damage the roof or the roof trusses. Failure of the automatic extinguishing system is alarmed in the Control Room.

T.2.7.2 Safe Shutdown Capability

As applicable, XX-E-013 identifies electrical PFSSD equipment located within the Fire Area, while E-15000 identifies PFSSD circuits. The detailed PFSSD analysis for the Fire Area is provided in E-1F9910. The analysis demonstrates that a success path of PFSSD equipment, unaffected by an T-2 fire, remains available for achieving and maintaining hot standby and ultimately, transition to cold shutdown, if necessary.

ATTACHMENT B
FIRE HAZARD ANALYSIS
(Page 233 of 250)

Therefore, a fire within Fire Area T-2 will not prevent safe shutdown of the plant.

ATTACHMENT B
FIRE HAZARD ANALYSIS
(Page 234 of 250)

Fire Area T-4 (Reference A-1806)

T.4.1 Fire Area Description

Turbine Building 2000', Lube Oil Storage Tanks Room 4308.

T.4.2 Major Equipment

Main lube oil storage tanks, oily waste sumps, main lube oil conditioner, and main lube oil transfer pump.

T.4.3 Design Features

This Fire Area is separated from other Fire Areas by fire barrier construction and penetration closure assemblies (structural steel fireproofing, fire door, fire damper, and penetration seals) that satisfy at least one of the following criteria: (Reference 3.1, Section F.8)

- Are directly qualified by 3-hour fire endurance testing in accordance with criteria of the applicable controlling standard (ASTM E-119, ASTM E-152, UL-10B, UL-555, or IEEE-634) for the respective barrier assembly protective feature.
- Have been evaluated as providing an equivalent level of protection.
- Have been evaluated as providing protection commensurate with the fire hazards present.

The doorway of the room has an 8-inch curb to contain oil spillage in the room.

T.4.4 Combustible Loading

Calculation XX-X-004 does not maintain a combustible loading classification for Fire Area T-4. The combustible hazard associated with this area is that presented by stored lubrication oil. The maximum capacity of each tank (TCF01A and TCF01B) is approximately 15,122 gallons.

T.4.5 Fire Protection

An automatic infrared flame detector is installed in this Fire Area. Manual-pull stations are located at Turbine Building Exits. Detector or pull station activation results in local fire alarm notification appliance operation and annunciation within the Control Room. The Control Room annunciation of a detection or pull station alarm is point addressable for a quick and easy means to identify the location associated with the device in alarm.

The area is protected by an automatic wet pipe sprinkler system. (Reference 3.1, Section F.8)

Hose stations and portable extinguishers are located outside the area to ensure accessibility. Refer to drawing A-1806 for specific hose station and fire extinguisher locations.

ATTACHMENT B
FIRE HAZARD ANALYSIS
(Page 235 of 250)

The area is accessible for fire fighting efforts via Turbine Building Room 4322.

An 8" curb and sump are provided within the area to contain and remove sprinkler and hose station discharge without appreciable accumulation. Refer to drawing series M-12LE for further information on the oily waste drain system.

T.4.6 Isolation and Smoke Removal

A fire in this area will be isolated from adjacent safe shutdown areas of the plant by fire barriers. Fire dampers will isolate the HVAC ducts from the adjacent safe shutdown areas. Refer to Section 4.3.7.2 for smoke removal discussion.

T.4.7 Analysis

T.4.7.1 Fire Suppression

A fire in this area will be detected and alarmed by the automatic detection system. In the event that a fire develops, it will be contained by the fire barriers and suppressed by the wet pipe system. Should the automatic suppression system fail, manual hose streams and extinguishers can be used to extinguish the fire.

T.4.7.2 Safe Shutdown Capability

There are no PFSSD equipment or circuits in this area. Therefore fire damage to this area will not prevent safe shutdown.

ATTACHMENT B
FIRE HAZARD ANALYSIS
(Page 236 of 250)

Fire Area T-10 (Reference A-1807)

T.10.1 Fire Area Description

Turbine Building 2033', Lube Oil Reservoir Room 4403.

T.10.2 Major Equipment

Lube oil reservoir.

T.10.3 Design Features

This Fire Area is separated from other Fire Areas by fire barrier construction and penetration closure assemblies (structural steel fireproofing, fire door, fire dampers, and penetration seals) that satisfy at least one of the following criteria: (Reference 3.1, Section F.8)

- Are directly qualified by 3-hour fire endurance testing in accordance with criteria of the applicable controlling standard (ASTM E-119, ASTM E-152, UL-10B, UL-555, or IEEE-634) for the respective barrier assembly protective feature.
- Have been evaluated as providing an equivalent level of protection.
- Have been evaluated as providing protection commensurate with the fire hazards present.

T.10.4 Combustible Loading

Calculation XX-X-004 does not maintain a combustible loading classification for Fire Area T-10. The combustible hazard associated with this area is that presented by lubrication oil within the main turbine lube oil tank (TCB01). The tank has a maximum capacity of approximately 12,450 gallons.

T.10.5 Fire Protection

An automatic infrared flame detector is installed in this Fire Area. Manual-pull stations are located at Turbine Building Exits. Detector or pull station activation results in local fire alarm notification appliance operation and annunciation within the Control Room. The Control Room annunciation of a detection or pull station alarm is point addressable for a quick and easy means to identify the location associated with the device in alarm.

The area is protected by an automatic wet pipe sprinkler system. (Reference 3.1, Section F.8)

Hose stations and portable extinguishers are located outside the area to ensure accessibility. Refer to drawing A-1807 for specific hose station and fire extinguisher locations.

The area is accessible for firefighting efforts via Turbine Building Room 4401.

ATTACHMENT B
FIRE HAZARD ANALYSIS
(Page 237 of 250)

Floor drains are provided within the area to contain and remove sprinkler and hose station discharge without appreciable accumulation. The drains discharge to the oily waste sump located in Room 4308. Refer to drawing series M-12LE for further information on the oily waste drain system.

T.10.6 Isolation and Smoke Removal

A fire in this area will be isolated from adjacent safe shutdown areas of the plant by fire barriers. Fire dampers will isolate the HVAC ducts from the adjacent safe shutdown areas. Refer to Section 4.3.7.2 for smoke removal discussion.

T.10.7 Analysis

T.10.7.1 Fire Suppression

A fire in this area will be detected and alarmed by the automatic detection system. In the event that a fire develops, it will be contained by the fire barriers, with the exception of the potential fire communication path to Fire Area T-4 via the floor drain system. The automatic sprinkler system will suppress a fire in the area. Should the automatic suppression system fail, manual hose streams and extinguishers can be used to extinguish the fire.

As identified in Section T.10.5, floor drains in the area discharge to the oily waste sump located in Room 4308 (Fire Area T-4). This presents a potential combustible liquid communication path between the two Fire Areas. However, each Fire Area is protected from other Fire Areas by fire barrier construction and a wet pipe sprinkler system ensuring that a fire originating in T-10 and communicating to T-4 through the drainage system, would be maintained within the fire barrier confines of T-4. Additionally, Fire Area T-4 does not contain any PFSSD equipment or circuits. Therefore, a fire involving both T-10 and T-4 will have the same overall impact on plant safe shutdown capability.

T.10.7.2 Safe Shutdown Capability

One cable for the control of valve ABHV031 runs through this Fire Area. This cable needs to function when the MSIV's are rendered incapable of closing due to a fire. For a fire in this area, the MSIV's will function normally. Therefore, a fire in any portion of Fire Area T-10 will not prevent safe shutdown of the plant.

ATTACHMENT B
FIRE HAZARD ANALYSIS
(Page 238 of 250)

Fire Area TURB (Reference A-1806 through A-0808)

Note:

The TURB FHA encompasses Fire Zones T-3, T-5, T-6, T-7, T-8, and T-9 identified in AP 10-106, Fire Preplans.

TURB.1 Fire Area Description

Entire Turbine Building north of Fire Area T-2. Rooms 4201, 4203, 4204, 4205, 4309, 4310, 4312, 4313, 4314, 4316, 4317, 4318, 4319, 4320, 4321, 4323, 4324, 4325, 4326, 4402, 4404, 4405, 4502, 4503, 4505, 4601, 4301E, 4301W, 4401E, 4401W, 4501E,4501W, OP-1, OP-2, and OP-7.

TURB.2 Major Equipment

Condensate pumps, heater drain pumps, low, intermediate and high pressure condensers, steam generator feedwater pump lube oil pumps and conditioners, lube oil filter pump, process sample rack, condenser drain pump, auxiliary steam boiler blowdown flash tank, demineralized water transfer pump, low TDS transfer pumps, high TDS transfer pumps, SLW oil interceptor transfer pumps, SLW oil interceptor, oily waste sump pumps, miscellaneous condensate drain pump and tank, condensate demineralizer hot water tank, condensate demineralizer control panel, steam generator feedwater pump and turbine, acid day tank, caustic day tank, condensate demineralizers, high TDS tanks, high TDS collection pumps, hydrazine chemical addition skid, ammonia chemical addition skid, high pressure feedwater heaters, motor control centers, moister separator/reheater drain tank, reheater drain tank, 125 volt dc electrical busses, 125 volt batteries, 125 volt battery chargers, 13.8 kv electrical busses, 4.16 kv electrical busses, 480 volt load centers, isophase bus duct cooling system, exciter control panel, main generator relay panels \ main generator potential relay cabinets, waterbox vent tank, waterbox venting pumps, moister separator/reheater drain tank, reheater drain tanks, main turbine generator, alternator, intercept and control valves, and closed cooling water surge tank.

TURB.3 Design Features

Fire Area TURB to T-2 is not separated by a physical fire barrier boundary. The 50’ mark north of the Auxiliary Building wall has been established as a theoretical “zone” boundary between T-2 and TURB for analysis purpose only. Fire barriers are provided for Battery Rooms 4402 and 4404 for commercial property protection.

The Communication Corridor (Fire Area CC-1) is open to this area via T-2. However, CC-1 is separated from the adjacent Control Building by a fire boundary wall.

TURB.4 Combustible Loading

Calculation XX-X-004 does not maintain a combustible loading classification for Fire Area TURB. The predominate combustible hazards associated with this area is that presented by lubrication oil and hydrogen within the main generator.

ATTACHMENT B
FIRE HAZARD ANALYSIS
(Page 239 of 250)

TURB.5 Fire Protection

Battery Rooms 4402 and 4404 are protected by automatic smoke detectors. Remaining TURB areas below the turbine operating floor (El. 2065'), with the exception of the Condenser Pit and Observation Posts are protected by an automatic detection system, using rate compensated thermal detectors. The detection system alarms locally and in the Control Room. Thermal detection activation and also charges the preaction sprinkler system in the area. The Control Room thermal detector alarm annunciation is zoned for quick identification of the specific area in alarm. Manual-pull fire alarm stations are located near the emergency exit doorways from this area. The pull stations alarm locally and in the Control Room. Control Room annunciation of a smoke detector and pull station alarm is point addressable for a quick and easy means to identify the location associated with the device in alarm.

Automatic preaction sprinkler systems are provided to protect TURB areas below the turbine operating floor (excluding room enclosures and the Condenser Pit area). Each system is charged by actuation of any one of the thermal detectors located in the area protected by that system. Each floor elevation in the Turbine Building with the exception of 1983' and 2065' is protected by two independent sprinkler systems with each system serving approximately one-half of the floor area. A preaction sprinkler system, actuated by thermal detection, is also provided for the main turbine generator bearings

The area under the condenser in the Condenser Pit is protected by an automatic wet pipe sprinkler system. The steam generator feedwater pump turbines are protected by a manually actuated water spray system. Detection is by thermal detectors which alarm locally and in the Control Room. A manual system is installed to prevent damage due to inadvertent operation. The hydrogen seal oil unit and is protected by an automatic water spray system actuated by thermal detectors, which alarm locally and in the Control Room. An automatic wet pipe sprinkler system is provided for the Outage office and storage area located in the northwest corner of the turbine operating floor.

The entire area is readily accessible through several interior and exterior doors and fire-rated stairways.

Adequate floor drains are provided in the Turbine Building area to remove sprinkler and hose station discharge without appreciable accumulation. Refer to drawing series M-12LE for further information on the oily waste drain system.

TURB.6 Isolation and Smoke Removal

A fire in this area will be isolated from the Auxiliary Building, Control Building, Fire Area T-4, and Fire Area T-10 by fire barriers. Fire dampers will isolate the HVAC ducts from the these areas. The roof of the Turbine Building is fitted with spring loaded vents which are held closed by fusible links. In the event of a fire in the Turbine Building, these vents will open to relieve smoke and heat. The vents are sized to provide 1 square foot of vent area for each 100 square feet of floor area. Refer to Section 4.3.7.2 for additional smoke removal discussion.

ATTACHMENT B
FIRE HAZARD ANALYSIS
(Page 240 of 250)

TURB.7 Analysis

TURB.7.1 Fire Suppression

A fire in this area will be detected and alarmed by the automatic detection system. In areas where preaction suppression systems are installed, the design is such that the system will discharge shortly after the automatic alarm signal occurs. The wet pipe sprinkler systems will automatically activate as sprinklers heads are opened by the fire. In the event of an automatic suppression system failure, complete extinguishment is not achieved by the automatic systems, or there is a delay in discharge, the fire can be manually extinguished, using the portable extinguishers, manual hose stations, and/or the manual water spray systems, where provided.

Collapse of the Turbine Building roof or even a Turbine Building roof truss is not credible and is not postulated because of the fire protection provided, low fire loadings above the operating deck of the Turbine Building, and the construction of the roof which meets FM Class I UL Class A requirements. Even though the roof trusses will not collapse, it has been verified that a free-falling roof truss has less energy than tornado missiles considered in the design of safety-related buildings.

A fire involving the Outage Office or storage area on the operating floor would be suppressed by the sprinkler system. All other fires on or above the operating deck would be extinguished manually. The combustible loading above the operating floor is low and administrative controls limit the introduction and storage of transient combustibles on the operating floor. Fires starting on or above the operating floor will not damage the roof or roof trusses. The resultant heat and smoke will be vented through the roof vents.

Fire starting below the operating deck in an open area will be automatically detected and suppressed by an automatic sprinkler system. Should an automatic fire extinguishing system fail to operate or is not entirely successful, manual fire fighting could still be accomplished to extinguish the fire. The resultant heat and smoke would be vented through the roof vents. Therefore, fires below the operating deck will not damage the roof or the roof trusses. Failure of the automatic extinguishing system is alarmed in the Control Room.

TURB.7.2 Safe Shutdown Capability

There are several components located in Fire Area TURB that are needed for a fire that renders the MSIVs incapable of closing. For a fire in this area, the MSIV's will function normally. Cables for several components that are needed for a fire that renders the MSIVs incapable of closing are located in Fire Area T-2 and CC-1. For a fire in these areas, the MSIV's will function normally.

ATTACHMENT B
FIRE HAZARD ANALYSIS
(Page 241 of 250)

The main turbine stop valves and steam bypass valves are located in Fire Area TURB. In addition to a fire that renders the MSIVs incapable of closing, these valves are needed in the case of a fire in the Control Room. The procedure that governs the safe shutdown of the plant in the case of a fire in the Control Room assures that these valves will close.

Fire in this area and CC-1 can cause loss of off site power. However, redundant on-site power sources are available.

In summary, a fire in any portion of Fire Area TURB will not prevent safe shutdown of the plant, even in the unlikely event that fire propagation to T-2 and/or CC-1 occurs.

ATTACHMENT B
FIRE HAZARD ANALYSIS
(Page 242 of 250)

Fire Area CST & RWST (Reference A-1802)

CST/RWST.1 Fire Area Description

Yard Areas around Condensate Storage Tank and Refueling Water Storage Tank (areas are identified as Fire Areas Y-01 and Y-02 in XX-X-004).

CST/RWST.2 Major Equipment

Condensate Storage Tank, Refueling Water Storage Tank, Demineralized Water Tank, Reactor Makeup Water Tank, and Emergency Fuel Oil Storage Tanks.

CST/RWST.3 Design Features

The water storage tanks are located in areas containing low combustible loading. The walls of the two buildings adjacent to the Refueling Water Storage Tank are of concrete for the Fuel Building and metal siding for the Hot Machine Shop. The walls of the buildings adjacent to the Condensate Storage Tank are concrete for the Reactor Building and metal siding for the Auxiliary Boiler Room. Neither the below grade emergency fuel oil storage tanks or the diked heating oil storage tank present an exposure hazard to the CST or RWST.

CST/RWST.4 Combustible Loading

The cumulative combustible loading classification for Fire Area CST/RWST is Low.

CST/RWST.5 Fire Protection

Yard hydrants and hose houses are located throughout the Power Block area.

CST/RWST.6 Isolation and Smoke Removal

Smoke will be removed by natural means for these outdoor structures.

CST/RWST.7 Analysis

CST/RWST.7.1 Fire Suppression

Manual fire suppression equipment is available to extinguish a fire in this area.

ATTACHMENT B
FIRE HAZARD ANALYSIS
(Page 243 of 250)

CST/RWST.7.2 Safe Shutdown Capability

As applicable, XX-E-013 identifies electrical PFSSD equipment located within the Fire Area, while E-15000 identifies PFSSD circuits. The detailed PFSSD analysis for the Fire Area is provided in E-1F9910. The analysis demonstrates that a success path of PFSSD equipment, unaffected by a CST/RWST fire, remains available for achieving and maintaining hot standby and ultimately, transition to cold shutdown, if necessary. Therefore, a fire within Fire Area CST/RWST will not prevent safe shutdown of the plant. This, coupled with the defense in depth fire protection features and administrative controls for the Fire Area, provides reasonable assurance that 10 CFR Part 20 radiation limits will not be exceeded due to a fire in CST/RWST.

ATTACHMENT B
FIRE HAZARD ANALYSIS
(Page 244 of 250)

Fire Area YARD-ESF (Reference E-0F0221)

Note:
Fire Area YARD-ESF is identified as YARD1 in E-15000.

YARD-ESF.1 Fire Area Description

ESF Transformers XNB01, XNB02, and surrounding yard area

YARD-ESF.2 Major Equipment

ESF Transformers XNB01 and XNB02.

YARD-ESF.3 Design Features

The two ESF Transformers are located outdoors west of the Turbine Building and north of the Communications Corridor. The units set approximately 9'-6" apart with an 13'-3" tall by 20'-8" long by 12" thick concrete barrier provided between the transformers for fire exposure protection. Overhead cable raceways exiting the transformers into the Communications Corridor are separated by a horizontal distance of approximately 20 ft. 11

Due to spatial separation, the Communications Corridor, Turbine Building, and Station Service Transformers, do not present an exposure hazard to XNB01 or XNB02.

YARD-ESF.4 Combustible Loading

The predominate combustible material is the transformer oil (approximately 2,170 gallons for XNB01 and approximately 4,205 gallons for XNB02). The oil is a Class IIIB combustible liquid. 11

YARD-ESF.5 Fire Protection

Each transformer is provided with automatic thermal detectors that upon activation will trip the open spray head deluge sprinkler system protecting the corresponding unit. The system may also be manually actuated by an electrical manual pull station in the area or by activation of a pneumatic manual release station on the deluge system riser. Detector or pull station activation will annunciate locally and in the Control Room. The Control Room annunciation of a detection or release station alarm is zoned for a quick and easy means to identify the location associated with the device in alarm.

Hydrants and hose hoses are accessible in the area for manual firefighting efforts.

The transformers area accessible from the yard area of the Power Block for firefighting efforts.

ATTACHMENT B
FIRE HAZARD ANALYSIS
(Page 245 of 250)

A curbed gravel pit is located beneath the transformers. The pit is sized to contain the oil from a transformer as well as water from both ESF transformer deluge sprinkler systems operating for approximately 10 minutes. Drainage is provided by a manual valve controlled 6" drain that discharges to the Turbine Building drainage system. Refer to drawing series M-12LE for further information on the oily waste drain system.

YARD-ESF.6 Isolation and Smoke Removal

The concrete barrier between the two transformers provides exposure protection from a fire originating in either transformer. Smoke will be removed by natural means for the outdoor transformers.

YARD-ESF.7 Analysis

YARD-ESF.7.1 Fire Suppression

A fire in either transformer unit would be detected by the automatic heat detectors, which would automatically actuate the open head spray deluge system to suppress the fire. In the event that the deluge system does not extinguish the fire or the system fails to operate, the fire can be extinguished manually by utilizing an area fire hydrant.

YARD-ESF.7.2 Safe Shutdown Capability

The ESF transformers have been included as PFSSD equipment because they are the normal power supplies to the emergency busses. An analysis has been performed that shows the areas where these transformers can be lost and is included in calculation XX-E-013. In all areas where fire can cause the loss of these transformers, the emergency diesel generators will be available. Therefore, a fire in that causes the loss of ESF transformers XNB01 and XNB02 will not prevent safe shutdown of the plant.

ATTACHMENT B
FIRE HAZARD ANALYSIS
(Page 246 of 250)

Fire Area YARD-SU (Reference E-0F0221)

Note:
Fire Area YARD-SU is identified as YARD3 in E-15000.

YARD-SU.1 Fire Area Description

Startup Transformers XMR01 and surrounding yard area.

YARD-SU.2 Major Equipment

Startup Transformer XMR01.

YARD-SU.3 Design Features

The Startup Transformer is located outdoors west of the Turbine Building. Overhead cable raceways exiting the transformers into the Communications

Due to spatial separation, the Turbine Building and Station Service Transformers, do not present an exposure hazard to XMR01.

YARD-SU.4 Combustible Loading

The predominate combustible material is the transformer oil (approximately 10,850 gallons). The oil is a Class IIIB combustible liquid.

YARD-SU.5 Fire Protection

The transformer is provided with cross zoned automatic thermal detectors. Detection by either zone will alarm locally and in the Control Room. Activation by both zones will trip the open spray head deluge sprinkler system protecting the transformer. A deluge system trip signal also deenergizes XMR01. Activation of the electrical manual pull station in the area results in an single zone only alarm. It will not trip the deluge system. Manual deluge system actuation may be accomplished by activation of the pneumatic manual release station on the deluge system riser or key activated switch at the control panel. The Control Room annunciation of a detection or manual pull station alarm is zoned for a quick and easy means to identify the location associated with the device in alarm.

Hydrants and hose hoses are accessible in the area for manual firefighting efforts.

The transformer area accessible from the yard area of the Power Block for firefighting efforts.

A curbed gravel pit is located beneath the transformer. The pit is sized to contain the oil from the transformer as well as water from the deluge sprinkler system operating for approximately 10 minutes. Drainage is provided by a manual valve controlled 6” drain that discharges to the Turbine Building drainage system. Refer to drawing series M-12LE for further information on the oily waste drain system.

ATTACHMENT B
FIRE HAZARD ANALYSIS
(Page 247 of 250)

YARD-SU.6 Isolation and Smoke Removal

Smoke will be removed by natural means for the outdoor transformer.

YARD-SU.7 Analysis

YARD-SU.7.1 Fire Suppression

A fire in the transformer unit would be detected by the automatic heat detectors, which would automatically actuate the open head spray deluge system to suppress the fire. In the event that the deluge system does not extinguish the fire or the system fails to operate, the fire can be extinguished manually by utilizing an area fire hydrant.

YARD-SU.7.2 Safe Shutdown Capability

The startup transformer XMR01 is required to provide power to equipment in the Turbine Building that is needed when a fire renders the MSIVs incapable of closing. Any fire that can cause the loss of the startup transformer will not cause the MSIVs to be incapable of closing. Therefore, a fire in that causes the loss of startup transformer XMR01 will not prevent safe shutdown of the plant.

ATTACHMENT B
FIRE HAZARD ANALYSIS
(Page 248 of 250)

Fire Area ESWC (Reference A-1324 through A-1327)

ESWC.1 Fire Area Description

ESW Vertical Loop Chase, West of Control Building, Elevations 1974' to 2087'-2", Room 8000.

ESWC.2 Major Equipment

'A' and 'B' train essential service water (ESW) piping and vacuum breakers.

ESWC.3 Design Features

The ESW Vertical Loop Chase is a Seismic Category I structure that is attached to the west exterior wall of the Control Building. The exterior walls of the Chase below grade are concrete. Above grade, the walls are 1/2" thick steel plate with the exception of the east wall, which is the Control Building concrete wall at column line CF. The approximate area footprint of the Chase is 23' x 13'. The Chase extends from 1974' to the top of the Control Building (2087'-2"). Access/egress is provided by an exterior door at 2000' (grade) and a personnel hatch on the Chase roof.

This fire area is separated from all other fire Areas by 3-hour rated fire barrier construction and penetration closure assemblies. No structural steel fireproofing is provided for the Chase due to low combustible loading. An additional consideration for not providing fireproofing was thermal expansion/contraction of the steel enclosure, from seasonal temperature changes, which would challenge fireproofing bond integrity. The exterior walls of the Chase are not fire rated, as there are no significant exterior fire exposure hazards in close proximity to the Chase.

ESWC.4 Combustible Loading

The cumulative combustible loading classification for Fire Area ESWC is Low, with minimal fixed combustibles and no combustible continuity. As an added defense in depth feature, the fire area is maintained as a Combustible Control Zone. This administrative control requires that transient combustibles be constantly attended, or a transient combustible materials (TCM) permit is required. The TCM will specify required compensatory measures commensurate with the hazard presented by the transient combustible material package.

ATTACHMENT B
FIRE HAZARD ANALYSIS
(Page 249 of 250)

ESWC.5 Fire Protection

Area smoke detection is provided for the Chase. A manual-pull fire alarm station is located at each exit. Smoke detector or pull station activation results in local fire alarm notification appliance operation and annunciation within the Control Room. The Control Room annunciation of a fire alarm is point addressable for a quick and easy means to identify the location associated with the device in alarm.

A dry standpipe connection is provided south of the Chase at grade level. The standpipe feeds open head spray nozzles located below the Chase roof. Fire water is provided to the system by connecting the standpipe to an area fire hydrant with fire hose located in the hydrant hose house. The nozzles provide water spray protection for the Chase footprint, including the structural steel vertical columns.

Manual fire water suppression capability also includes hose stream application via area fire hydrants that are provided with fire hose and nozzle stored within the fire hydrant hose house.

Portable fire extinguishers are provided within the Chase for incipient fire response.

Drainage for the Chase is by a sump located on the 1974' elevation. Fire water discharge into the chase will not impact safe shutdown capability, as there are no electrical safe shutdown components within the Chase.

ESWC.6 Isolation and Smoke Removal

The fire barrier separating the Chase from the Control Building will prevent fire propagation to a communicating fire area. No ventilation ductwork penetrates the fire barrier separating the Chase from the Control Building. Louvered vents are provided in the exterior walls of the chase to provide natural ventilation.

Refer to Section 4.3.7.2 for smoke removal discussion.

ESWC.7 Analysis

ESWC.7.1 Fire Suppression

In the event that a fire occurs within the Chase, it will be detected by area smoke detection. Fire severity will be low considering the limited amount of fixed combustibles and the administratively controlled transient combustibles within the Chase. Fire suppression will be via portable fire extinguishers, manual operation of the water spray system, or hose stream from an area yard fire hydrant. This protection approach

ATTACHMENT B
FIRE HAZARD ANALYSIS
(Page 250 of 250)

ensures that Chase structural integrity will not be challenged by an ESW Vertical Loop Chase fire.

ESWC.7.2 Safe Shutdown Capability

As previously identified, there is no electrical safe shutdown equipment within the fire area. Protection of the Chase and vertical structural steel with the manual water spray system ensures that the building structure will not impact the performance of the ESW piping internal to the Chase. Per the section 3.2.1.2 assumption from NEI 00-01, *Guidance for Post-Fire Safe Shutdown Circuit Analysis,* (Rev. 2), exposure fire damage to manual valves and piping does not adversely impact their ability to perform their pressure boundary or safe shutdown function. Therefore, a fire within ESWC will not prevent safe shutdown of the plant.

ATTACHMENT C
NON-SAFETY RELATED SITE STRUCTURES
(Page 1 of 2)

Structures & Equipment	Nearest Structure Containing PFSSD Equipment/Circuits	Approximate Distance (ft)
345 KV Switchyard and 69 KVA Substation	Turbine Building	1155
Concentrate Acid Storage Tank Area	ESW Mechanical Vault	675
Unit Aux. Transformer XMA02	Turbine Building	20
Main Phase A Transformer XMA01A	Turbine Building	62
Main Phase B Transformer XMA01B	Turbine Building	62
Main Phase C Transformer XMA01B	Turbine Building	62
Spare Transformer	Turbine Building	62
Station Service Transformer XPB03	Turbine Building	63
Station Service Transformer XPB04	Turbine Building	63
Admin. Services Shop	ESW Mechanical Vault	354
Cable Reel Shop	Start-Up Transformer XMR01	744
Walter P. Chrysler Support Complex	Turbine Building	112
Charles Curtis Development Center	ESW Mechanical Vault	477
Circulating Water Screen House	ESW Pump House	849
Dosimetry Building	Start-Up Transformer XMR01	58
Dimineralized Water Storage	CST & Valve House	21
Dwight D. Eisenhower Learning Center (Emergency Operations Center)	Turbine Building	14070
Ron Evans Outage Processing Center	Turbine Building	1041
Fire Training Building	ESW Pumphouse	645
Clyde Cessna Administration Building	CST	277
High Ammonia Chemistry Building	Turbine Building	504
Hazardous Waste Storage	Radwaste Storage Building	507
Hydrogen Storage	Turbine Building	747
Kelly Building #7	Start-Up Transformer XMR01	1080
Edward P. Macabe Support Building	Turbine Building	448
NDE/Civil Test Center	ESW Mechanical Vault	234
North Storage Building	Turbine Building	1245
Olive Ann Beech - Ops Admin. Building	CST	128
Arthur Capper OJT Center	ESW Mechanical Vault	531
Outage Support Building	Start-Up Transformer XMR01	52
Owens Corning Warehouse	Radwaste Building	513
Nitrogen / Oxygen Storage	Diesel Generator Building	255
Pump House Northeast	ESW Pumphouse	1506
Paint Shop	Radwaste Building	945
Paint Storage	Radwaste Building	1092
Pole Barns East, Middle, & West	Start-Up Transformer XMR01	1348
Charles Evans Whittaker Security Building	Reactor Building	192
Security Diesel Generator Building	Fuel Building	197
Secondary Access	Turbine Building	1290
Badge Check Point to Owner Controlled Area	Turbine Building	2994
Vehicle Inspection Building	Turbine Building	2970
William Allen White Skills Training Center	Turbine Building	909
Technical Support Center	Turbine Building	183
Vehicle Maintenance Shop	ESW Mechanical Vault	513
Amelia Earhart Warehouse	ESW Pumphouse	882

ATTACHMENT C
NON-SAFETY RELATED SITE STRUCTURES
(Page 2 of 2)

Structures & Equipment	Nearest Structure Containing PFSSD Equipment/Circuits	Approximate Distance (ft)
Amelia Earhart Warehouse (West)	Control Building	822
Waste Oil Storage	Radwaste Building	216
Heating Oil Pumphouse and Storage Tank Area	Radwaste Building	417
Sewage Lagoon	Turbine Building	3444
Circ. Water Discharge	Start-Up Transformer XMR01	984
Waste Water Treatment	Turbine Building	885
SBO Diesel Generator Structure	Control Building	240

-END-