WOLF CREEK
NUCLEAR OPERATING CORPORATION

M-663-00017A

Attachment B7

Fire Protection Evaluation For Penetrant Size Exceeding Typical Detail FB-1 Limitation

Rev. No.	Prepared By	Date	Reviewed By	Date
W01	Jeff Suter	08/19/05	Wayne S Aregood	08/19/05
W04	Don Garbe	12/14/11	Jeff Suter	12/15/2011

Table of Contents

Revision Log 3

1.0 Purpose 4

2.0 Scope 4

3.0 References 4

4.0 Evaluation 5

5.0 Conclusions 8

Appendix B7, Penetration Seal Data ..... (89 Total Pages)

Revision Log

Revision	Reason for Revision
W01	Original Issue
W04	Included new penetrations P135S0943 and P145S1019 added by C.P. 012957.

1.0 Purpose

1.1 The purpose of this document is to evaluate existing penetration seals that are not directly bounded to the typical detail limitations established in M-663-00017. This evaluation was conducted in effort to satisfy regulatory expectation regarding qualification and documentation of fire barrier penetration seals, as discussed in NRC Information Notice 88-04. This evaluation was conducted in accordance with the guidance of NRC Generic Letter 86-10.

2.0 Scope

2.1 The Table I penetrations in relation to the design requirements discussed in Section 5.1.

2.2 Refer to Section 7.0 of M-663-00017A for a cross-reference list of penetrations within Table I that are evaluated for additional seal parameters that do not satisfy the typical detail limitations of M-663-00017. In these instances, the potential cumulative affects of multiple unbounded attributes were considered for each penetration of concern.

3.0 References

3.1 NRC Generic Letter 86-10, Implementation of Fire Protection Requirements, dated April 24, 1986

3.2 NRC Information Notice 88-04, Inadequate Qualification and Documentation of Fire Barrier Penetration Seals

3.3 10 CFR 50 Appendix R, Fire Protection Program For Nuclear Power Facilities Operating Prior To January 1, 1979

3.4 LER 87-10, Technical Specification Violations – Inoperable Fire Barriers Caused By Personnel Errors

3.5 M-663-00017, Penetration Seal Typical Details

3.6 TR-187 (M-663-00154), Fire and Hose Stream Test of a 8" thick specimen of #TCO-026 Ceramic Blanket used as a penetration seal material in a 12" diameter sleeve penetrated by bare pipe, insulated pipe, and copper, monel, and stainless steel instrument tubing

3.7 CTP-1002, (M-663-00083), Fire Qualification Test on Silicone Foam Floor Penetration Seals

3.8 CTP-1020 & 1021 (M-663-00060), Fire Qualification Test on Penetration Seals

3.9 Change Package 012957, Install Turbine Driven Auxiliary Feedwater Pump Standby Tanks, Rev. 0

3.10 WIP-M-1X1352-002-A-1, Auxiliary Bldg. – Area 5 Penetration Closure Plan EL. 2013'-6", EL. 2026'-0", EL. 2090'-0", Rev. 0

4.0 Assumptions

4.1 It is assumed that existing penetration seal materials have been installed as required by applicable typical design details and procedures. This is an acceptable assumption based on a review of the Quality Control documentation maintained during initial penetration seal installation activities and the intrusive inspections conducted to address LER 87-10, regarding seal material depth.

5.0 Evaluation

5.1 Assessment of Condition to Design Requirements

The penetration openings identified in Table I contain a pipe penetrant that exceeds the size limitation directly bounded by typical detail FB-1 from M-663-00017. The FB-1 detail, which is comprised of a 12" ceramic fiber depth between silicone impregnated fiberglass boots, directly qualifies a seal with up to a 6" diameter penetrant as 3-hour fire (F) and temperature (T) rated.

TABLE I

Penetrations with Penetrant Size Exceeding Detail FB-1 Limitations

Penetration Number	Communicating Fire Areas		Pipe Penetrant Diameter	Comments/ Disposition
	Side 1	Side 2		
P112W1378	A-1	C-1	30"	See 5.2
P112W1380	A-1	C-1	30"	See 5.2
P121S0271	A-1	A-4	12"	See 5.2
P131S0492	A-8	A-1	24"	See 5.2
P132S0682	A-8	A-1	24"	See 5.2
P132S0739	A-8	A-1	8"	See 5.2
P132W1844	A-8	A-3	24"	See 5.2
P135S0232	A-15	A-33	10"	See 5.2
P135S0233	A-15	A-33	8"	See 5.2
P141S1014	A-16	A-8	24"	See 5.2
P141W2486	A-16	A-26	12"	See 5.2
P143W1488	A-5	F-4	12"	See 5.2
P143W1489	A-5	F-4	12"	See 5.2
P152W2585	A-19	A-22	10"	See 5.2
P152W2617	A-19	A-22	8"	See 5.2
P311W0839	C-1	CC-1	30"	See 5.2

Penetration Number	Communicating Fire Areas		Pipe Penetrant Diameter	Comments/ Disposition
	Side 1	Side 2		
P321S0085	C-6	C-1	8”	See 5.2
P321S0086	C-6	C-1	8”	See 5.2
P321S0123	C-6	C-1	8”	See 5.2
P611W0082	F-1	F-2	8”	See 5.2
P611W0197	F-2	F-3	12”	See 5.2
P621S0153	F-5	F-3	10”	See 5.2
P621S0156	F-4	F-3	12”	See 5.2
P621S0157	F-4	F-2	12”	See 5.2
P621S0162	F-4	F-2	12”	See 5.2
P621W0009	F-4	F-5	12”	See 5.2
P621W0017	F-5	F-4	12”	See 5.2
P621W0221	A-5	F-4	12”	See 5.2
P621W0224	A-5	F-4	12”	See 5.2
P135S0943	A-15	A-33	10”	See 5.2
P145S1019	A-23	A-15	8”	See 5.2

5.2 Evaluation of Condition

The Table I penetrations are considered 3-hour F rated based on the successful performance of the following fire tested configurations, which demonstrate that a minimum 8” depth of ceramic fiber will prevent the passage of flame and hose stream to the unexposed barrier side.

- TR-187 – 12” diameter opening containing a 2” bare and insulted pipe and three ½” diameter tube penetrants. The penetration was sealed with an 8” depth of ceramic fiber blanket.

- CTP-1002 Penetration 6 – 12” diameter opening containing a 6” bare pipe penetrant. The penetration was sealed with a 12” depth of ceramic fiber blanket between silicone impregnated fiberglass boots.

- CTP-1002 Penetration 10 – 12” diameter opening containing a 6” insulated pipe penetrant. The penetration was sealed with a 12” depth of ceramic fiber blanket between silicone impregnated fiberglass boots.

- CTP-1020 Penetration 1 – 6” diameter opening containing a 2” bare pipe penetrant. The penetration was sealed with a 12” depth of ceramic fiber blanket between silicone impregnated fiberglass boots.

- CTP-1021 Penetration 1 – 10” diameter opening containing a 2” bare pipe penetrant. The penetration was sealed with a 12” depth of ceramic fiber blanket between silicone impregnated fiberglass boots.

Ceramic fiber is an inert material comprised of compressed refractory fibers. It is not charred or consumed during fire exposure. The material will not be negatively affected by heat transmission through the penetrating item. Therefore, penetrant size is not a concern regarding capability of a ceramic fiber seal to prevent flame and hose stream passage to the unexposed side. However, penetrant size is a concern regarding unexposed side temperature development. Based on a comparison to the fire tested configurations bounding detail FB-1, the Table I penetrations are not considered T rated.

M-663-00017 identifies that where piping penetrations exist that do not satisfy T rating requirements, a seal assembly with an F rating corresponding to the hourly rating of the associated barrier is acceptable, provided evaluation demonstrates that exposed insitu combustibles and redundant post fire safe shutdown (PFSSD) equipment/circuits on the unexposed barrier side will not be detrimentally affected by the increased penetrant temperatures.

In effort to evaluate fire area impact, field walkdowns and comprehensive assessment reviews, documented in Appendix B7, were conducted for each penetration of concern. For penetrations P135S0943 and P145S1019 the design location for the penetrations, as identified on M-1X1352, were reviewed and assessed in relation to the current field configuration. The review for the Table 1 penetrations was completed in accordance with the criteria and review methodology established in M-663-00017A Section 7.2.3 for non-T rated penetrations.

The review identified that no exposed insitu combustibles or PFSSD circuits are located within the heat affected zone. Each of the penetrations satisfies the review criteria of M-663-00017 where T rating requirements are not met. Therefore, the penetrations are acceptable, as this evaluation demonstrates reasonable assurance that the penetration seals do not present a negative impact to PFSSD capability.

5.3 Post Fire Safe Shutdown Impact

There is no impact to PFSSD systems or components as a result of this evaluation. The Table I penetrations are 3-hour F rated. The comprehensive walkdown review for each of these penetrations revealed that no exposed insitu combustibles or PFSSD circuits are negatively affected by the non T rated penetrations.

6.0 Conclusions

Based on the above discussions, it is reasonable to conclude that the Table I penetration seals are acceptable as 3-hour F rated and will perform their intended function, regardless of not achieving a T rating. The penetration seals satisfy regulatory requirements and commitments as well as WCNOC Fire Protection Program requirements, to prevent spread of fire from one fire area to another. It has also been determined through this evaluation that the lack of a T rating will not affect the plant's ability to achieve and maintain PFSSD.

Penetration Seal Data

Appendix: B7

Penetration #: P112W1378

Penetration Type: FB-1 **Fire Area (Side 1):** A-1 **Fire Area (Side 2):** C-1

Loc./Elev.: 1979'-6" **M-0X Dwg:** M-1X1902

1. **Barrier Thickness:** 36"
2. **Opening Size:** 42"D
3. **Penetrants:** (1) 30"P
4. **Sealant Type:** Ceramic Fiber
5. **Damming Side1:** Boot
6. **Damming Side 2:** Boot
7. **Damming Continuity (Acc/Rej):** N/A
8. **Boot Condition (Acc/Rej):** Accept
9. **Sealant Depth:** Assumed Per Detail
10. **Annular Gap (smallest):** 3"
11. **Gap between pen:** N/A
12. **Barrier Type:** A F
13. **Opening Sleeved or Concrete:** Steel
14. **Pipe Insulated:** Yes

Wayne Aregood
Prepared By:

Jeff Suter
Reviewed By:

Walkdown Comments:

Insulation abuts boot, does not transition through seal zone. Insulation removed, no longer insulated.

Sketch:

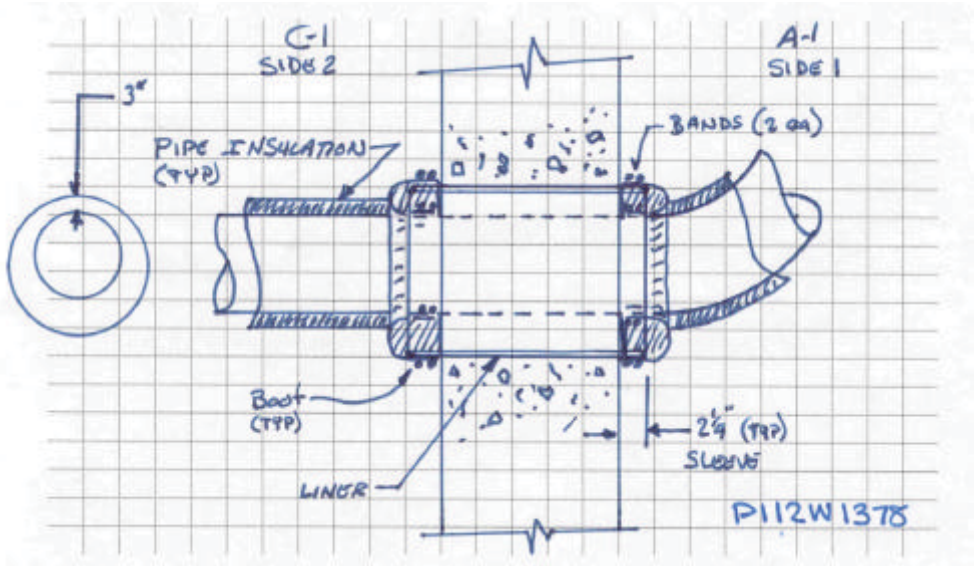

Penetration Seal Data

Appendix: B7

Photos: P112W1378

Fire Area A-1 (Side 1)

Fire Area A-1 (Side 1)

Fire Area C-1 (Side 2)

Fire Area C-1 (Side 2)

Penetration Seal Data

Appendix: B7

Heat Affected Zone Review: P112W1378

Fire Area (Side 1) A-1

No issues within Heat Affected Zone

Fire Area (Side 2) C-1

No issues within Heat Affected Zone

Review Distances

(Reference M-663-00017A, Figure 7.2.3-1)

30" Pipe			
L1 & L2 Dist. (ft)	Temp. (°F)	R1 Radius (in)	R2 Radius (in)
0.5	1706	4.5	5.9
1	1513	3.7	5
1.5	1342	2.9	4.2
2	1192	2.2	3.6
2.5	1059	1.6	3
3	942	1.1	2.4
3.5	839	0.6	2
4	748	0.2	1.6
4.5	668	Contact	1.2
5	597		0.9
5.5	535		0.6
6	480		0.4
6.5	432		0.1
7	389		Contact

Side 1 Photo

No photo required.

Side 2 Photo

Sketch

No sketch required.

Penetration Seal Data

Appendix: B7

Penetration #: P112W1380

Penetration Type: FB-1 **Fire Area (Side 1):** A-1 **Fire Area (Side 2):** C-1

Loc./Elev.: 1979'-6" **M-0X Dwg:** M-1X1902

1. **Barrier Thickness:** 36"
2. **Opening Size:** 42"D
3. **Penetrants:** (1) 30"P
4. **Sealant Type:** Ceramic Fiber
5. **Damming Side1:** Boot
6. **Damming Side 2:** Boot
7. **Damming Continuity (Acc/Rej):** N/A
8. **Boot Condition (Acc/Rej):** Accept
9. **Sealant Depth:** Assumed Per Detail
10. **Annular Gap (smallest):** 3"
11. **Gap between pen:** N/A
12. **Barrier Type:** A F
13. **Opening Sleeved or Concrete:** Steel
14. **Pipe Insulated:** Yes

Wayne Aregood
Prepared By:

Jeff Suter
Reviewed By:

Walkdown Comments:

Sketch:

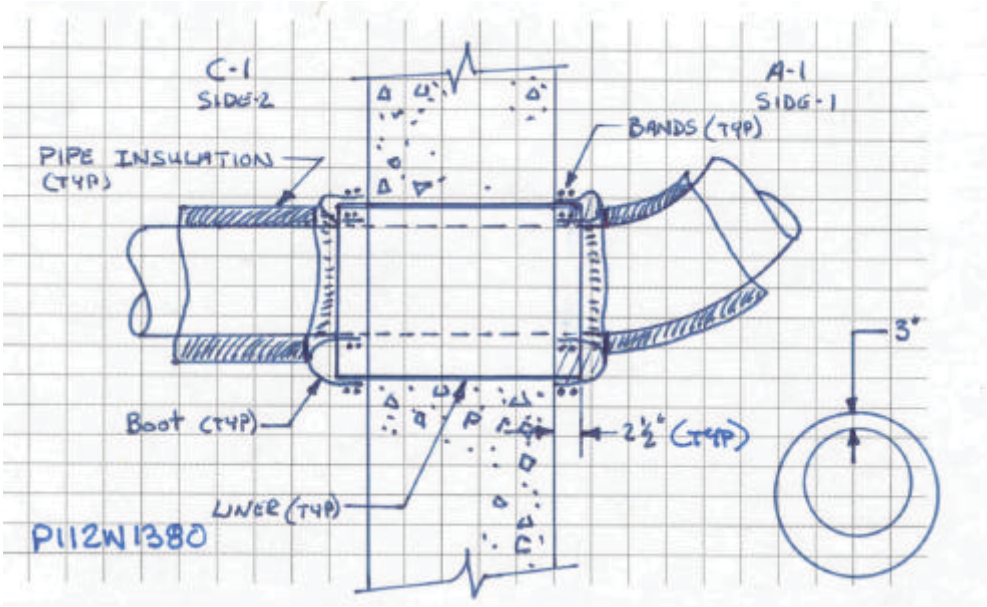

Penetration Seal Data

Appendix: B7

Photos: P112W1380

Fire Area A-1 (Side 1)

Fire Area A-1 (Side 1)

Fire Area C-1 (Side 2)

Fire Area C-1 (Side 2)

Penetration Seal Data

Appendix: B7

Heat Affected Zone Review: P112W1380

Fire Area (Side 1) A-1

1. No issues within Heat Affected Zone

Fire Area (Side 2) C-1

No issues within Heat Affected Zone

Review Distances

(Reference M-663-00017A, Figure 7.2.3-1)

30" Pipe			
L1 & L2 Dist. (ft)	Temp. (°F)	R1 Radius (in)	R2 Radius (in)
0.5	1706	4.5	5.9
1	1513	3.7	5
1.5	1342	2.9	4.2
2	1192	2.2	3.6
2.5	1059	1.6	3
3	942	1.1	2.4
3.5	839	0.6	2
4	748	0.2	1.6
4.5	668	Contact	1.2
5	597		0.9
5.5	535		0.6
6	480		0.4
6.5	432		0.1
7	389		Contact

Side 1 Photo

No photo required.

Side 2 Photo

No photo required.

Sketch

No sketch required.

Penetration Seal Data

Appendix: B7

Penetration #: P121S0271

Penetration Type: FB-1 **Fire Area (Side 1):** A-1 **Fire Area (Side 2):** A-4

Loc./Elev.: 1988'-0" **M-0X Dwg:** M-0X1211

1. **Barrier Thickness:** 22"
2. **Opening Size:** 16" D
3. **Penetrants:** (1) 12"P
4. **Sealant Type:** Ceramic Fiber
5. **Damming Side1:** Boot
6. **Damming Side 2:** Boot
7. **Damming Continuity (Acc/Rej):** N/A
8. **Boot Condition (Acc/Rej):** Accept
9. **Sealant Depth:** Assumed Per Detail
10. **Annular Gap (smallest):** 1/2"
11. **Gap between pen:** N/A
12. **Barrier Type:** F R W
13. **Opening Sleeved or Concrete:** Steel
14. **Pipe Insulated:** No

Wayne Aregood
Prepared By:

Jeff Suter
Reviewed By:

Walkdown Comments:
Slab thickness determined from drawing C-0C1211.

Sketch:

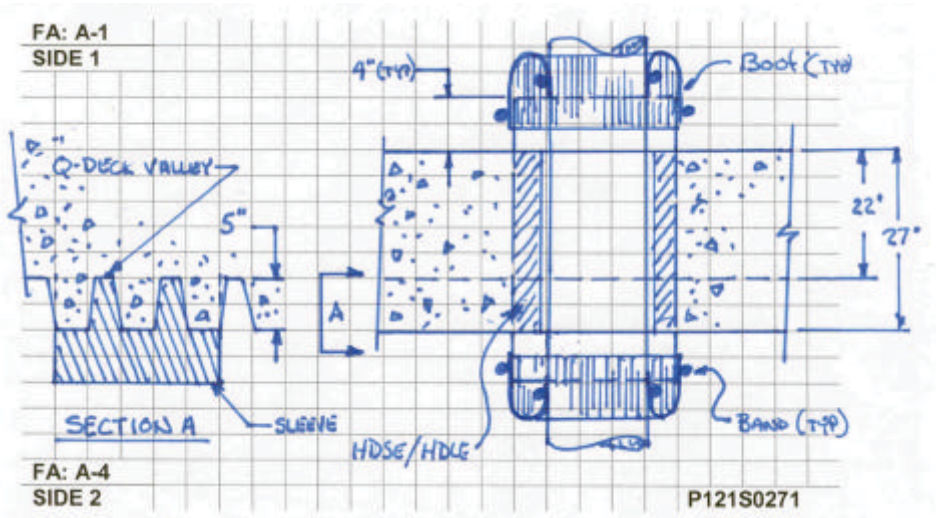

Penetration Seal Data

Appendix: B7

Photos: P121S0271

Fire Area A-1 (Side 1)

Fire Area A-1 (Side 1)

Fire Area A-4 (Side 2)

Fire Area A-4 (Side 2)

Penetration Seal Data

Appendix: B7

Heat Affected Zone Review: P121S0271

Fire Area (Side 1) A-1

No issues within Heat Affected Zone.

Fire Area (Side 2) A-4

No issues within Heat Affected Zone.

Review Distances

(Reference M-663-00017A, Figure 7.2.3-1)

12" Pipe			
L1 & L2 Dist. (ft)	Temp. (°F)	R1 Radius (in)	R2 Radius (in)
0.5	1712	4.6	5.9
1	1524	3.7	5.1
1.5	1357	3	4.3
2	1209	2.3	3.6
2.5	1078	1.7	3.1
3	962	1.2	2.5
3.5	860	0.7	2.1
4	769	0.3	1.7
4.5	689	Contact	1.3
5	618		1
5.5	555		0.7
6	499		0.4
6.5	450		0.2
7	406		0
7.5	368		Contact

Side 1 Photo

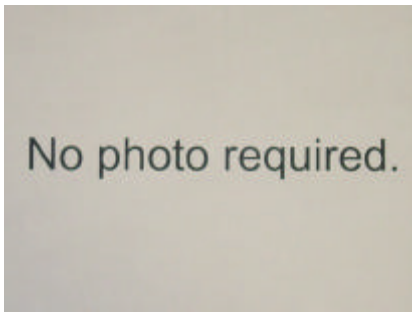

Side 2 Photo

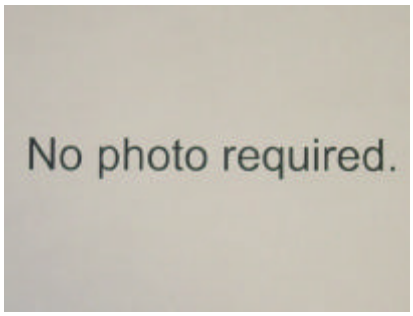

Sketch

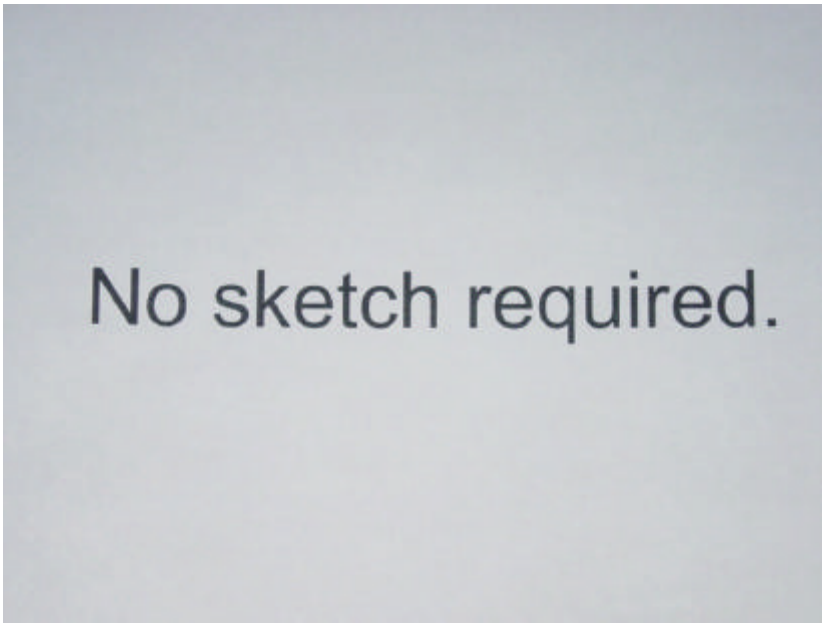

Penetration Seal Data

Appendix: B7

Penetration #: P131S0492

Penetration Type: FB-1 **Fire Area (Side 1):** A-8 **Fire Area (Side 2):** A-1

Loc./Elev.: 2000'-0" **M-0X Dwg:** M-1X1311

1. **Barrier Thickness:** 10"
2. **Opening Size:** 30"D
3. **Penetrants:** (1) 24"P
4. **Sealant Type:** Ceramic Fiber
5. **Damming Side1:** Boot
6. **Damming Side 2:** Boot
7. **Damming Continuity (Acc/Rej):** N/A
8. **Boot Condition (Acc/Rej):** Accept
9. **Sealant Depth:** Assumed Per Detail
10. **Annular Gap (smallest):** 2"
11. **Gap between pen:** N/A
12. **Barrier Type:** F
13. **Opening Sleeved or Concrete:** Steel
14. **Pipe Insulated:** No

Wayne Aregood
Prepared By:

Jeff Suter
Reviewed By:

Walkdown Comments:
Slab thickness based on C-1C1311.

Sketch:

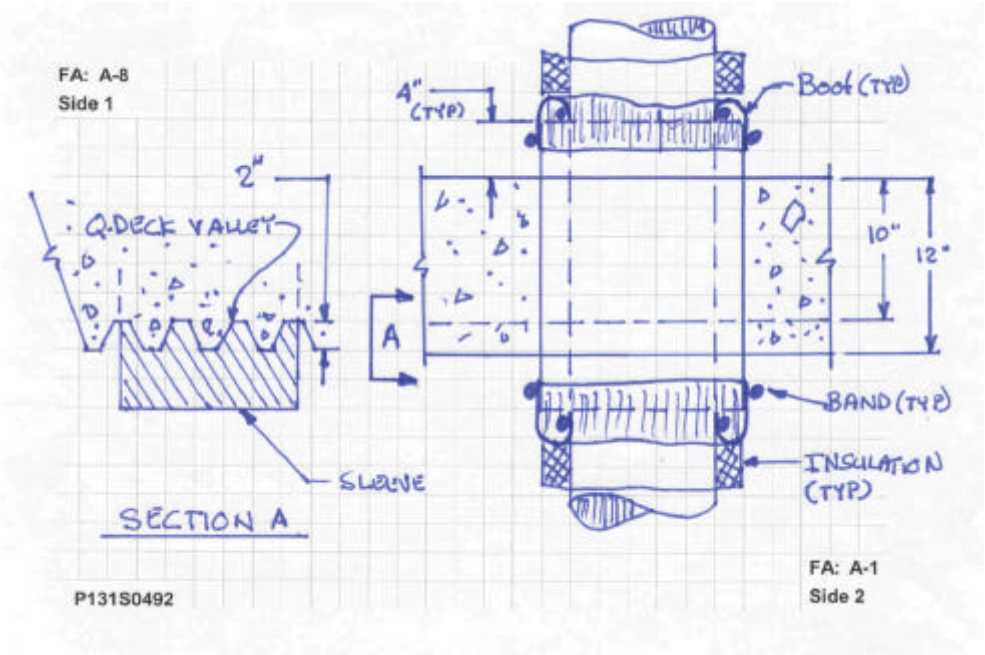

Penetration Seal Data

Appendix: B7

Photos: P131S0492

Fire Area A-8 (Side 1)

Fire Area A-8 (Side 1)

Fire Area A-1 (Side 2)

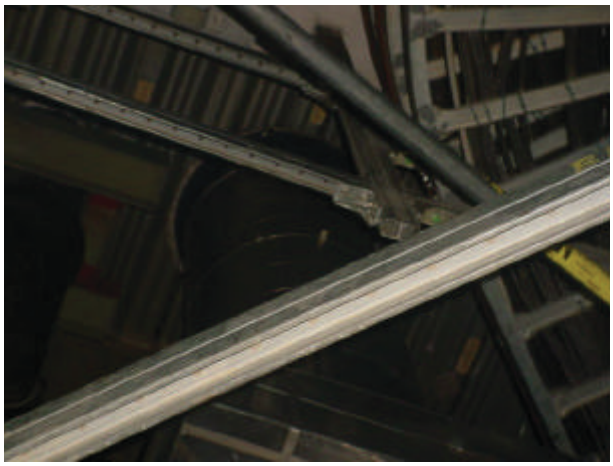

Fire Area A-1 (Side 2)

Penetration Seal Data

Appendix: B7

Heat Affected Zone Review: P131S0492

Fire Area (Side 1) A-8

No Issues within Heat Affected Zone

Fire Area (Side 2) A-1

No issues within Heat Affected Zone

Review Distances

(Reference M-663-00017A, Figure 7.2.3-1)

24" Pipe			
L1 & L2 Dist. (ft)	Temp. (°F)	R1 Radius (in)	R2 Radius (in)
0.5	1763	4.8	6.1
1	1615	4.1	5.5
1.5	1480	3.5	4.9
2	1357	3	4.3
2.5	1244	2.5	3.8
3	1141	2	3.3
3.5	1048	1.6	2.9
4	962	1.2	2.5
4.5	884	0.8	2.2
5	813	0.5	1.9
5.5	748	0.2	1.6
6	689	Contact	1.3
6.5	635		1.1
7	585		0.8
7.5	540		0.6
8	499		0.4
8.5	462		0.3
9	427		0.1
9.5	396		Contact

Side 1 Photo

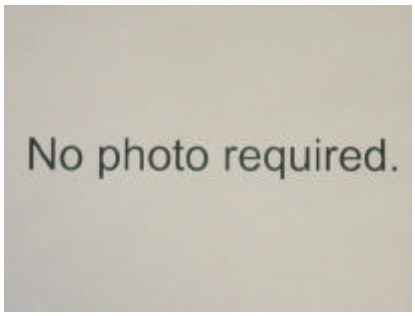

Side 2 Photo

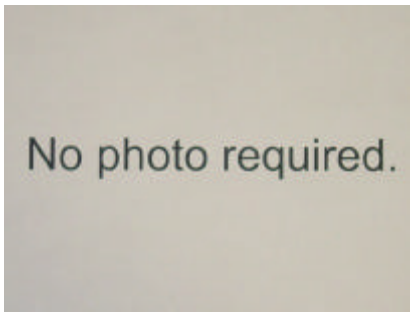

Sketch

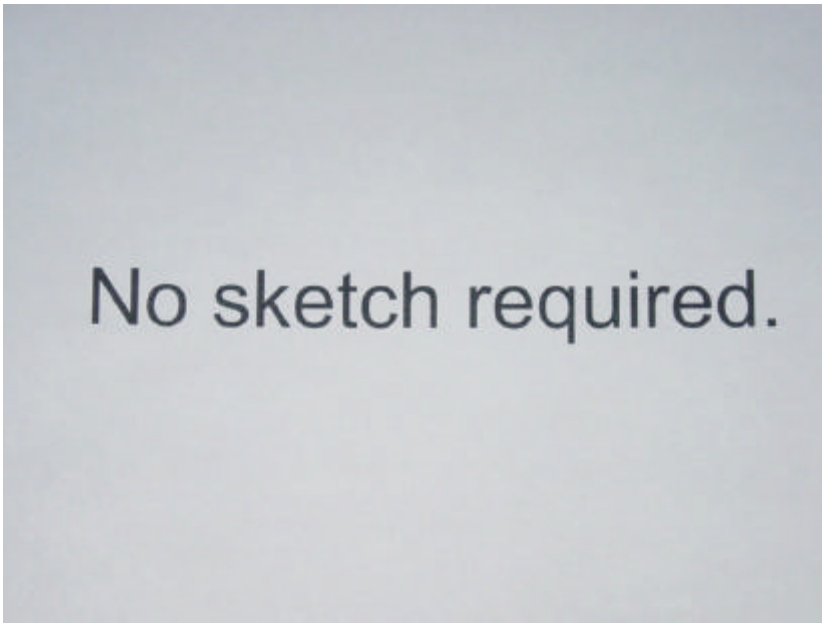

Penetration Seal Data

Appendix: B7

Penetration #: P132S0682

Penetration Type: FB-1 **Fire Area (Side 1):** A-8 **Fire Area (Side 2):** A-1

Loc./Elev.: 2000'-0" **M-0X Dwg:** M-1X1321

1. **Barrier Thickness:** 10"
2. **Opening Size:** 30"D
3. **Penetrants:** (1) 24"P
4. **Sealant Type:** Ceramic Fiber
5. **Damming Side1:** Boot
6. **Damming Side 2:** Boot
7. **Damming Continuity (Acc/Rej):** N/A
8. **Boot Condition (Acc/Rej):** Accept
9. **Sealant Depth:** Assumed Per Detail
10. **Annular Gap (smallest):** 2"
11. **Gap between pen:** N/A
12. **Barrier Type:** F
13. **Opening Sleeved or Concrete:** Steel
14. **Pipe Insulated:** No

Jeff Suter
Prepared By:

Wayne Aregood
Reviewed By:

Walkdown Comments:
Slab thickness determined by Drawing C-1C1311 (wsa)

Sketch:

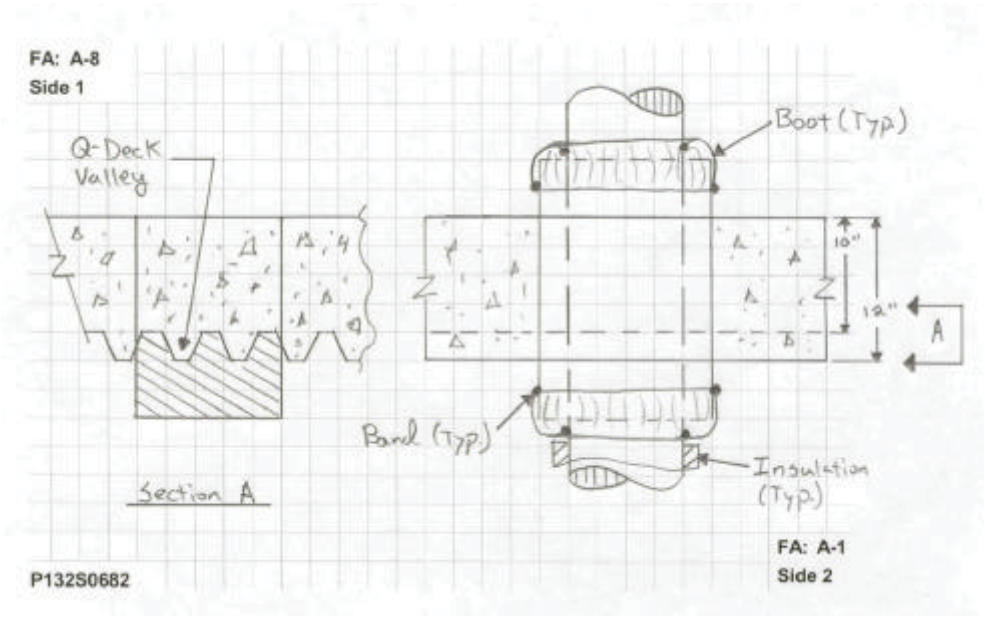

Penetration Seal Data

Appendix: B7

Photos: P132S0682

Fire Area A-8 (Side 1)

Fire Area A-8 (Side 1)

Fire Area A-1 (Side 2)

Fire Area A-1 (Side 2)

Penetration Seal Data

Appendix: B7

Heat Affected Zone Review: P132S0682

Fire Area (Side 1) A-8

No issues within Heat Affected Zone

Fire Area (Side 2) A-1

No issues within Heat Affected Zone

Review Distances

(Reference M-663-00017A, Figure 7.2.3-1)

24" Pipe			
L1 & L2 Dist. (ft)	Temp. (°F)	R1 Radius (in)	R2 Radius (in)
0.5	1763	4.8	6.1
1	1615	4.1	5.5
1.5	1480	3.5	4.9
2	1357	3	4.3
2.5	1244	2.5	3.8
3	1141	2	3.3
3.5	1048	1.6	2.9
4	962	1.2	2.5
4.5	884	0.8	2.2
5	813	0.5	1.9
5.5	748	0.2	1.6
6	689	Contact	1.3
6.5	635		1.1
7	585		0.8
7.5	540		0.6
8	499		0.4
8.5	462		0.3
9	427		0.1
9.5	396		Contact

Side 1 Photo

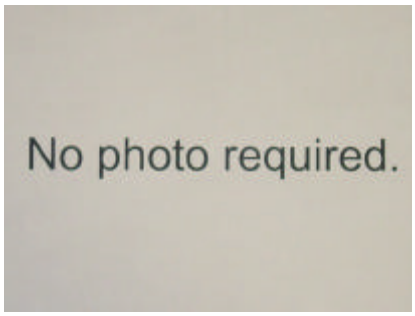

Side 2 Photo

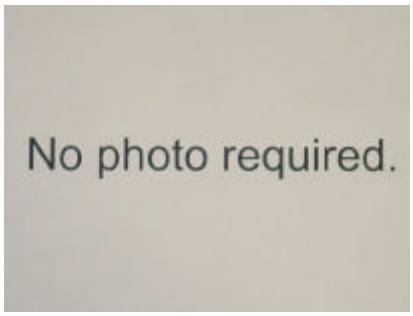

Sketch

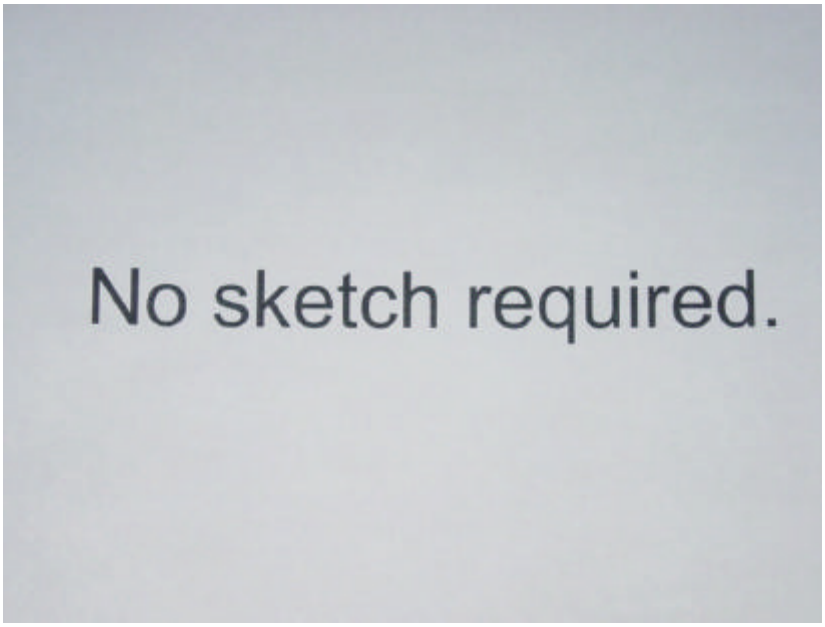

Penetration Seal Data

Appendix: B7

Penetration #: P132S0739

Penetration Type: FB-1 **Fire Area (Side 1):** A-8 **Fire Area (Side 2):** A-1

Loc./Elev.: 2000'-0" **M-0X Dwg:** M-1X1321

1. **Barrier Thickness:** 12"
2. **Opening Size:** 16"D
3. **Penetrants:** (1) 8"P
4. **Sealant Type:** Ceramic Fiber
5. **Damming Side1:** Boot
6. **Damming Side 2:** Boot
7. **Damming Continuity (Acc/Rej):** N/A
8. **Boot Condition (Acc/Rej):** Accept
9. **Sealant Depth:** Assumed Per Detail
10. **Annular Gap (smallest):** 3"
11. **Gap between pen:** N/A
12. **Barrier Type:** F
13. **Opening Sleeved or Concrete:** Steel
14. **Pipe Insulated:** Yes

Wayne Aregood
Prepared By:

Jeff Suter
Reviewed By:

Walkdown Comments:
Slab thickness based on C-1C1311.

Sketch:

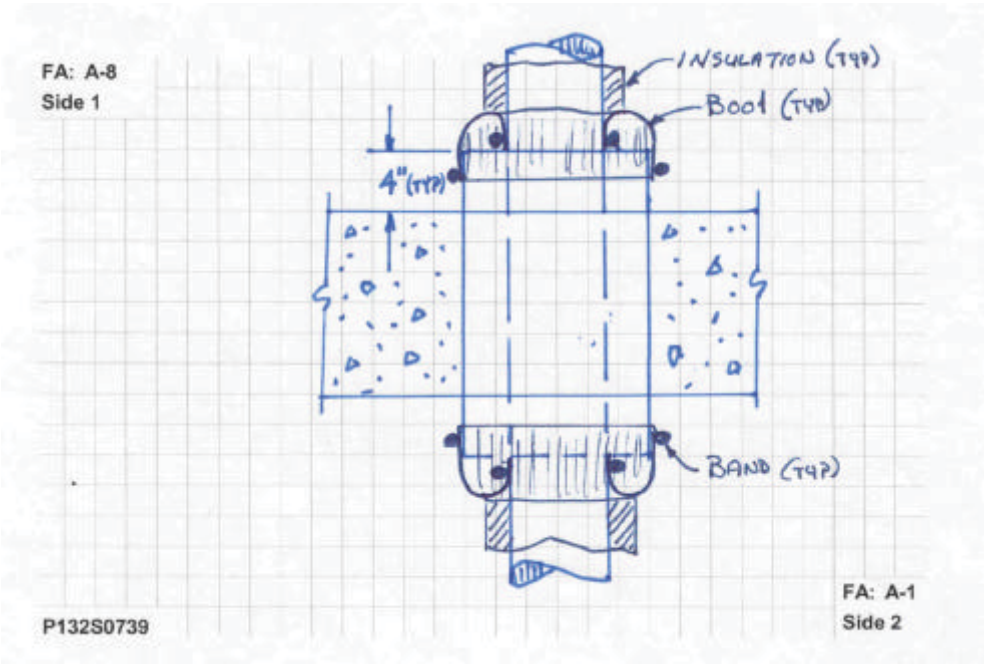

Penetration Seal Data

Appendix: B7

Photos: P132S0739

Fire Area A-8 (Side 1)

Fire Area A-8 (Side 1)

Fire Area A-1 (Side 2)

Fire Area A-1 (Side 2)

Penetration Seal Data

Appendix: B7

Heat Affected Zone Review: P132S0739

Fire Area (Side 1) A-8

No issues within Heat Affected Zone

Fire Area (Side 2) A-1

No issues within Heat Affected Zone

Review Distances

(Reference M-663-00017A, Figure 7.2.3-1)

8" Pipe			
L1 & L2 Dist. (ft)	Temp. (°F)	R1 Radius (in)	R2 Radius (in)
0.5	1677	4.4	5.8
1	1463	3.4	4.8
1.5	1277	2.6	3.9
2	1116	1.9	3.2
2.5	976	1.2	2.6
3	855	0.7	2
3.5	750	0.2	1.6
4	659	Contact	1.2
4.5	581		0.8
5	512		0.5
5.5	453		0.2
6	402		0
6.5	358		Contact

Side 1 Photo

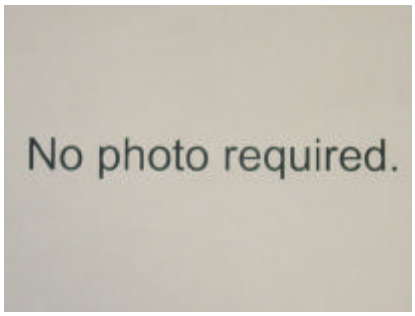

Side 2 Photo

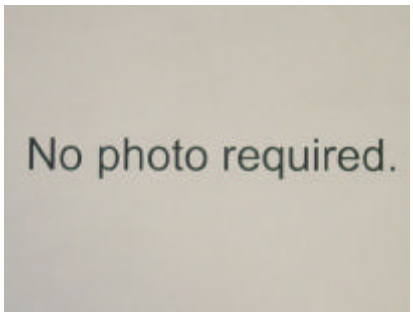

Sketch

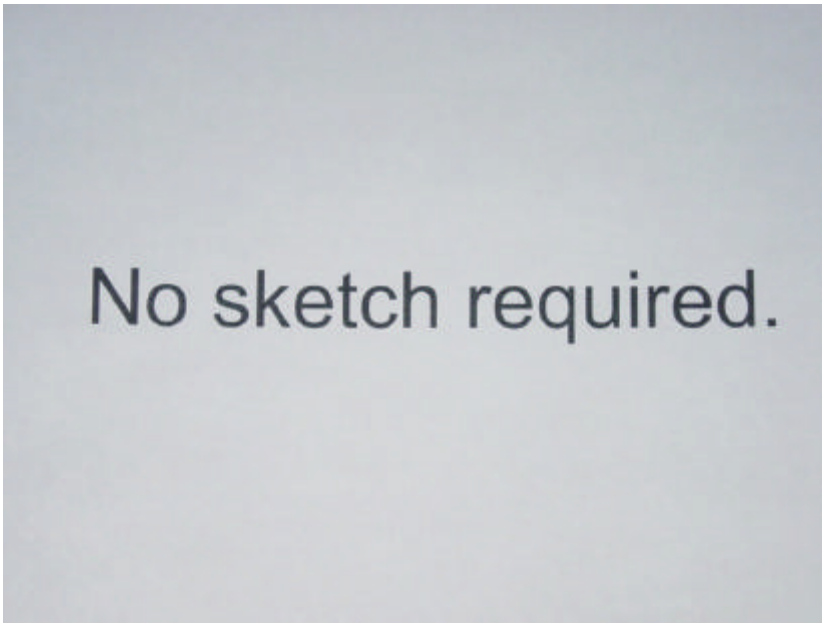

Penetration Seal Data

Appendix: B7

Penetration #: P132W1844

Penetration Type: FB-1 **Fire Area (Side 1):** A-8 **Fire Area (Side 2):** A-3

Loc./Elev.: 2013'-9" **M-0X Dwg:** M-1X1918

1. **Barrier Thickness:** 12"
2. **Opening Size:** 30"D
3. **Penetrants:** (1) 24"P
4. **Sealant Type:** Ceramic Fiber
5. **Damming Side1:** Boot
6. **Damming Side 2:** Boot
7. **Damming Continuity (Acc/Rej):** N/A
8. **Boot Condition (Acc/Rej):** * Accept
9. **Sealant Depth:** Assumed Per Detail
10. **Annular Gap (smallest):** 3"
11. **Gap between pen:** N/A
12. **Barrier Type:** F
13. **Opening Sleeved or Concrete:** Steel
14. **Pipe Insulated:** Yes

Wayne Aregood
Prepared By:

Jeff Suter
Reviewed By:

Walkdown Comments:

Wall thickness determined by Drawing 1-C01321. Insulation encapsulated, assumed OK.

Sketch:

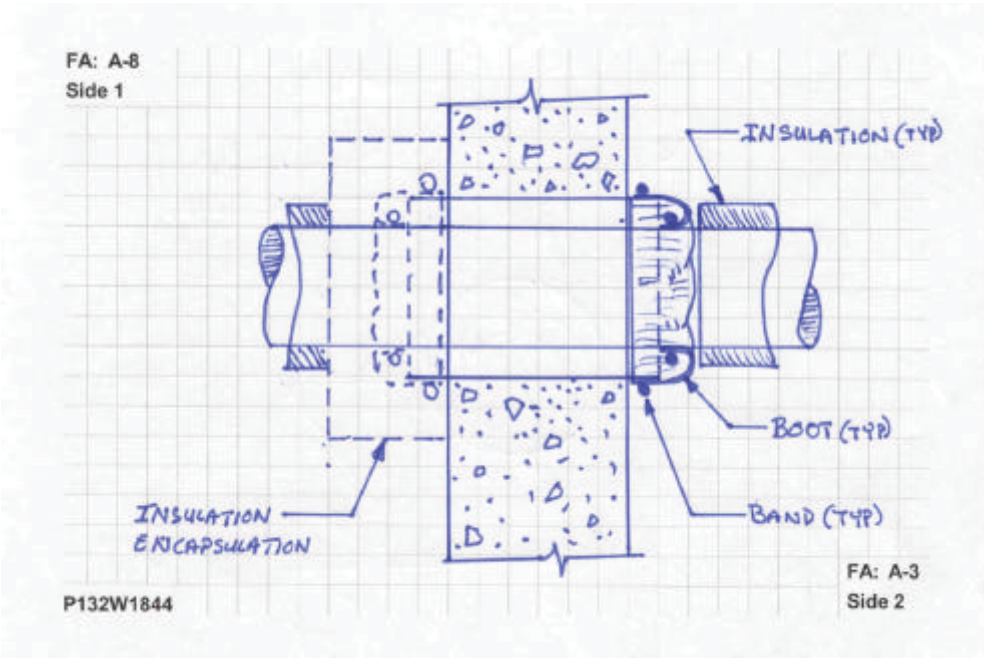

Penetration Seal Data

Appendix: B7

Photos: P132W1844

Fire Area A-8 (Side 1)

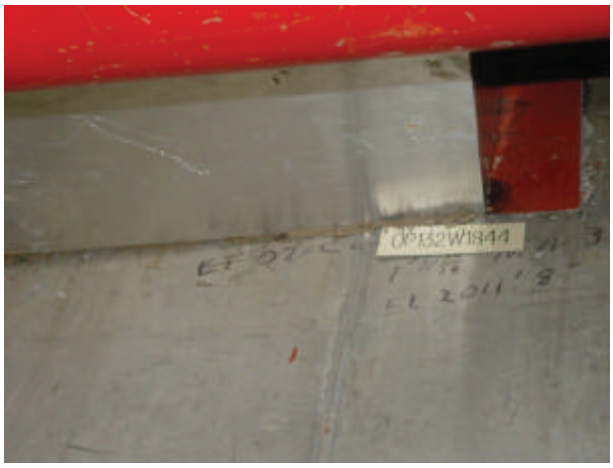

Fire Area A-8 (Side 1)

Fire Area A-3 (Side 2)

Fire Area A-3 (Side 2)

Penetration Seal Data

Appendix: B7

Heat Affected Zone Review: P132W1844

Fire Area (Side 1) A-8

No Issues within Heat Affected Zone

Fire Area (Side 2) A-3

No issues within Heat Affected Zone

Review Distances

(Reference M-663-00017A, Figure 7.2.3-1)

24" Pipe			
L1 & L2 Dist. (ft)	Temp. (°F)	R1 Radius (in)	R2 Radius (in)
0.5	1763	4.8	6.1
1	1615	4.1	5.5
1.5	1480	3.5	4.9
2	1357	3	4.3
2.5	1244	2.5	3.8
3	1141	2	3.3
3.5	1048	1.6	2.9
4	962	1.2	2.5
4.5	884	0.8	2.2
5	813	0.5	1.9
5.5	748	0.2	1.6
6	689	Contact	1.3
6.5	635		1.1
7	585		0.8
7.5	540		0.6
8	499		0.4
8.5	462		0.3
9	427		0.1
9.5	396		Contact

Side 1 Photo

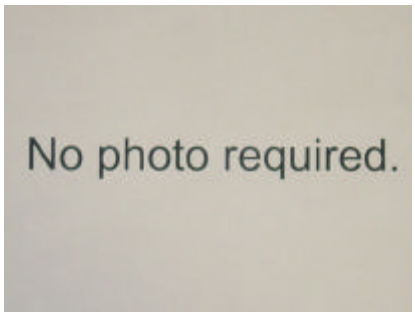

Side 2 Photo

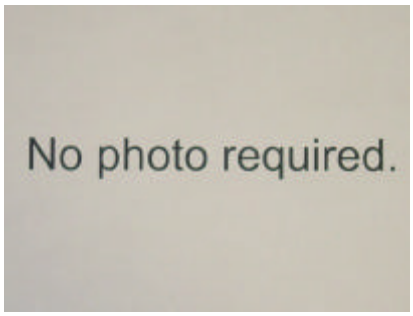

Sketch

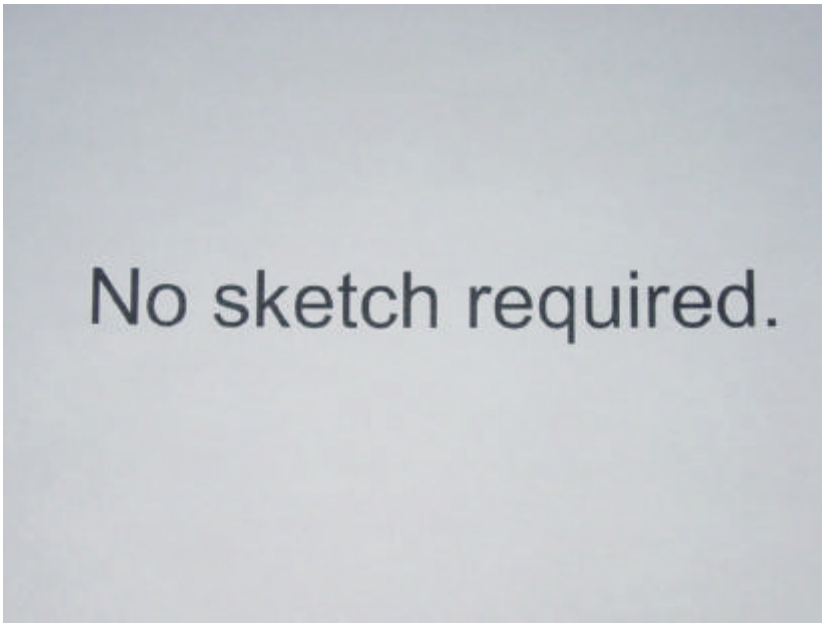

Penetration Seal Data

Appendix: B7

Penetration #: P135S0232

Penetration Type: FB-1 **Fire Area (Side 1):** A-15 **Fire Area (Side 2):** A-33

Loc./Elev.: 2000'-0" **M-0X Dwg:** M-1X1151

1. **Barrier Thickness:** 16"
2. **Opening Size:** 16"D
3. **Penetrants:** (1) 10"P
4. **Sealant Type:** Ceramic Fiber
5. **Damming Side1:** Boot
6. **Damming Side 2:** Boot
7. **Damming Continuity (Acc/Rej):** N/A
8. **Boot Condition (Acc/Rej):** Accept
9. **Sealant Depth:** Assumed Per Detail
10. **Annular Gap (smallest):** 1 1/2"
11. **Gap between pen:** N/A
12. **Barrier Type:** A F W
13. **Opening Sleeved or Concrete:** Steel
14. **Pipe Insulated:** No

Wayne Aregood
Prepared By:

Jeff Suter
Reviewed By:

Walkdown Comments:

Underside of slab has Q-Decking, effective barrier thickness is measured from corrugated valley.

Sketch:

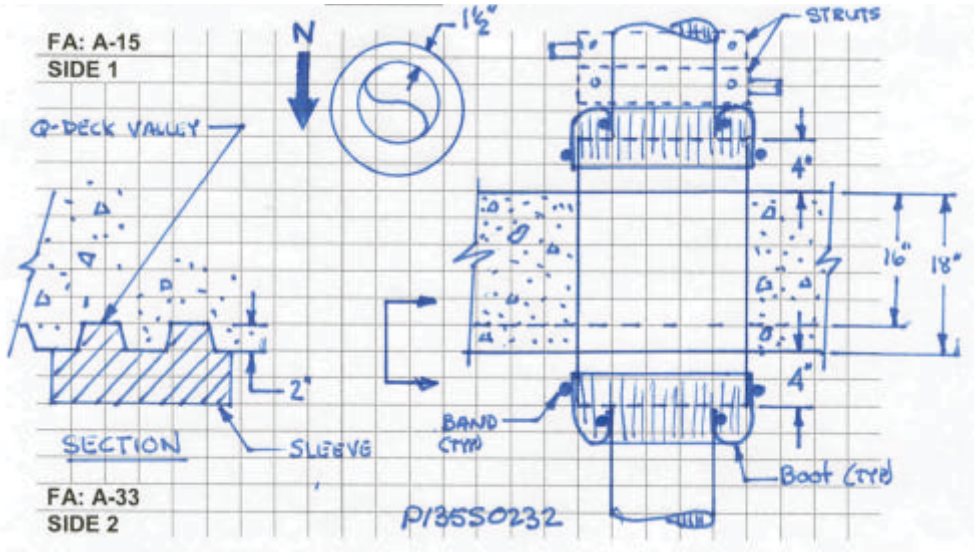

Penetration Seal Data

Appendix: B7

Photos: P135S0232

Fire Area A-15 (Side 1)

Fire Area A-15 (Side 1)

Fire Area A-33 (Side 2)

Fire Area A-33 (Side 2)

Penetration Seal Data

Appendix: B7

Heat Affected Zone Review: P135S0232

Fire Area (Side 1) A-15

No issues within Heat Affected Zone

Fire Area (Side 2) A-33

No issues within Heat Affected Zone

Review Distances

(Reference M-663-00017A, Figure 7.2.3-1)

10" Pipe			
L1 & L2 Dist. (ft)	Temp. (°F)	R1 Radius (in)	R2 Radius (in)
0.5	1697	4.5	5.8
1	1497	3.6	4.9
1.5	1321	2.8	4.1
2	1167	2.1	3.5
2.5	1032	1.5	2.8
3	914	1	2.3
3.5	810	0.5	1.8
4	719	0.1	1.4
4.5	639	Contact	1.1
5	569		0.8
5.5	508		0.5
6	454		0.2
6.5	406		0
7	365		Contact

Side 1 Photo

No photo required.

Side 2 Photo

No photo required.

Sketch

No sketch required.

Penetration Seal Data

Appendix: B7

Penetration #: P135S0233

Penetration Type: FB-1 **Fire Area (Side 1):** A-15 **Fire Area (Side 2):** A-33

Loc./Elev.: 2000'-0" **M-0X Dwg:** M-1X1151

1. **Barrier Thickness:** 16"
2. **Opening Size:** 14"D
3. **Penetrants:** (1) 8"P
4. **Sealant Type:** Ceramic Fiber
5. **Damming Side1:** Boot
6. **Damming Side 2:** Boot
7. **Damming Continuity (Acc/Rej):** N/A
8. **Boot Condition (Acc/Rej):** Accept
9. **Sealant Depth:** Assumed Per Detail
10. **Annular Gap (smallest):** 1"
11. **Gap between pen:** N/A
12. **Barrier Type:** A F W
13. **Opening Sleeved or Concrete:** Steel
14. **Pipe Insulated:** No

Wayne Aregood
Prepared By:

Jeff Suter
Reviewed By:

Walkdown Comments:

Underside of slab has Q-Decking, effective barrier thickness is measured from corrugated valley.

Sketch:

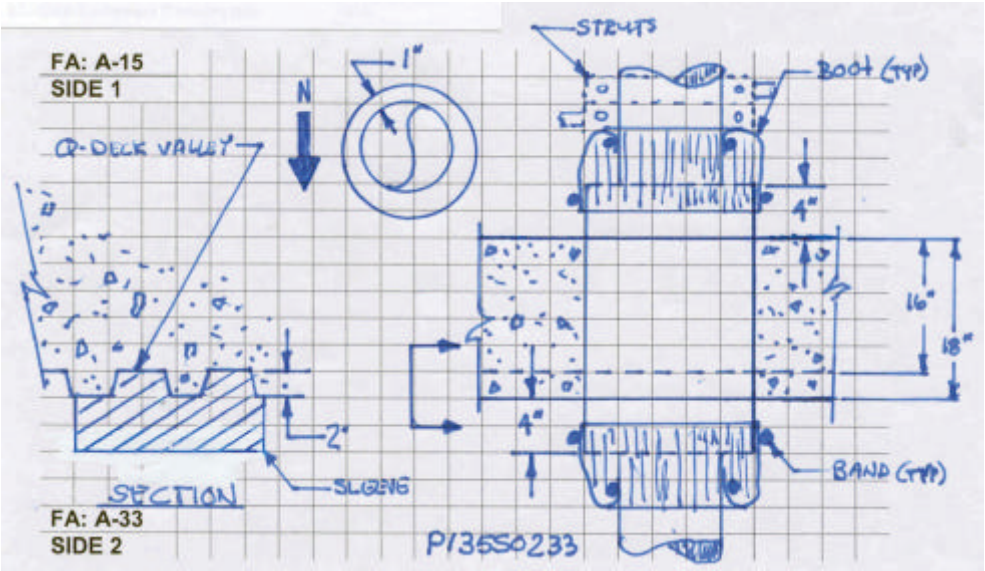

Penetration Seal Data

Appendix: B7

Photos: P135S0233

Fire Area A-15 (Side 1)

Fire Area A-15 (Side 1)

Fire Area A-33 (Side 2)

Fire Area A-33 (Side 2)

Penetration Seal Data

Appendix: B7

Heat Affected Zone Review: P135S0233

Fire Area (Side 1) A-15

No issues within Heat Affected Zone

Fire Area (Side 2) A-33

No issues within Heat Affected Zone

Review Distances

(Reference M-663-00017A, Figure 7.2.3-1)

8" Pipe			
L1 & L2 Dist. (ft)	Temp. (°F)	R1 Radius (in)	R2 Radius (in)
0.5	1677	4.4	5.8
1	1463	3.4	4.8
1.5	1277	2.6	3.9
2	1116	1.9	3.2
2.5	976	1.2	2.6
3	855	0.7	2
3.5	750	0.2	1.6
4	659	Contact	1.2
4.5	581		0.8
5	512		0.5
5.5	453		0.2
6	402		0
6.5	358		Contact

Side 1 Photo

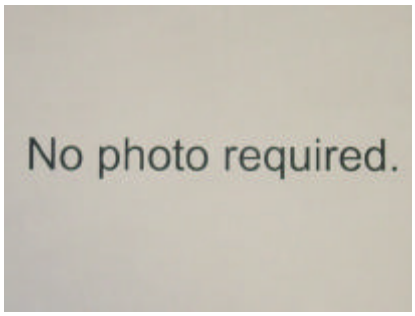

Side 2 Photo

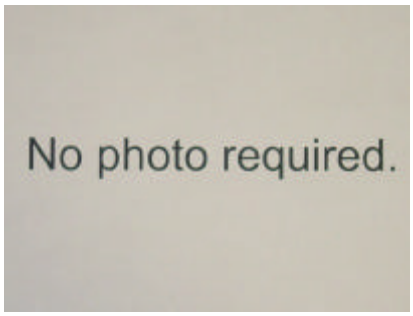

Sketch

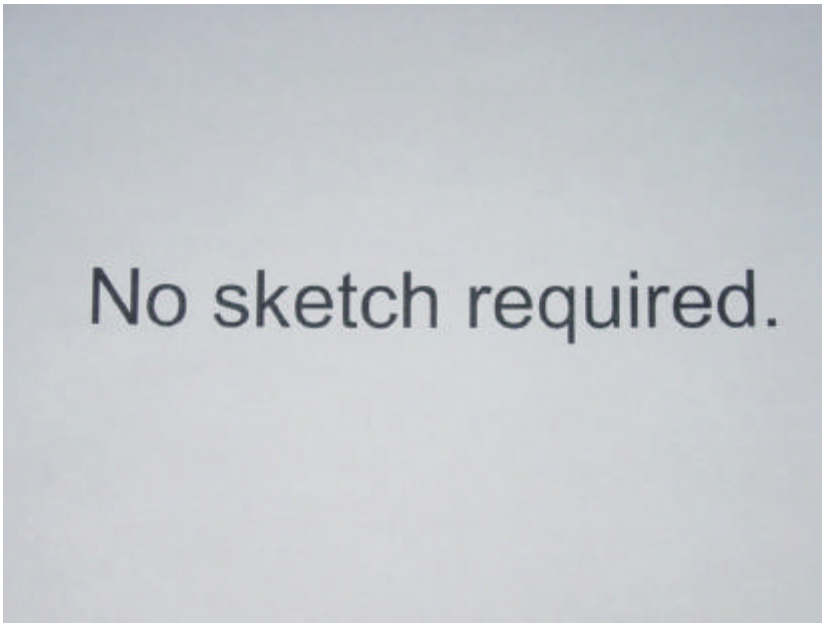

Penetration Seal Data

Appendix: B7

Penetration #: P135S0943

Penetration Type: FB-1 **Fire Area (Side 1):** A-15 **Fire Area (Side 2):** A-33

Loc./Elev.: 2013'-6" **M-0X Dwg:** M-1X1352

1. **Barrier Thickness:** 12"
2. **Opening Size:** 14"D
3. **Penetrants:** (1) 10" P
4. **Sealant Type:** Ceramic Fiber
5. **Damming Side1:** N/A
6. **Damming Side 2:** N/A
7. **Damming Continuity (Acc/Rej):** N/A
8. **Boot Condition (Acc/Rej):** Not Reviewed
9. **Sealant Depth:** Not Reviewed
10. **Annular Gap (smallest):** Not Reviewed
11. **Gap between pen:** Not Reviewed
12. **Barrier Type:** A F P W
13. **Opening Sleeved or Concrete:** Steel
14. **Pipe Insulated:** No

Jeff Suter
Prepared By:

Don Garbe
Reviewed By:

Walkdown Comments:

The walkdown review was based on design location of the penetration, as identified on M-1X1352

Sketch:

FA: A-15
SIDE 1

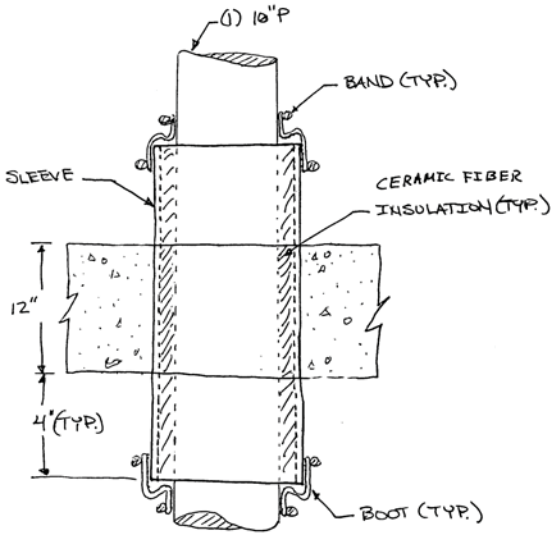

P135S0943

FA: A-33
SIDE 2

Penetration Seal Data

Appendix: B7

Penetration #: P141S1014

Penetration Type: FB-1 **Fire Area (Side 1):** A-16 **Fire Area (Side 2):** A-8

Loc./Elev.: 2026'-0" **M-0X Dwg:** M-1X1411

1. **Barrier Thickness:** 20"
2. **Opening Size:** 30"D
3. **Penetrants:** (1) 24"P
4. **Sealant Type:** Ceramic Fiber
5. **Damming Side1:** Boot
6. **Damming Side 2:** Boot
7. **Damming Continuity (Acc/Rej):** N/A
8. **Boot Condition (Acc/Rej):** Accept
9. **Sealant Depth:** Assumed per detail
10. **Annular Gap (smallest):** 2-1/4"
11. **Gap between pen:** N/A
12. **Barrier Type:** F
13. **Opening Sleeved or Concrete:** Steel
14. **Pipe Insulated:** No

Jeff Suter
Prepared By:

Wayne Aregood
Reviewed By:

Walkdown Comments:
Slab thickness based on C-0C1411.

Sketch:

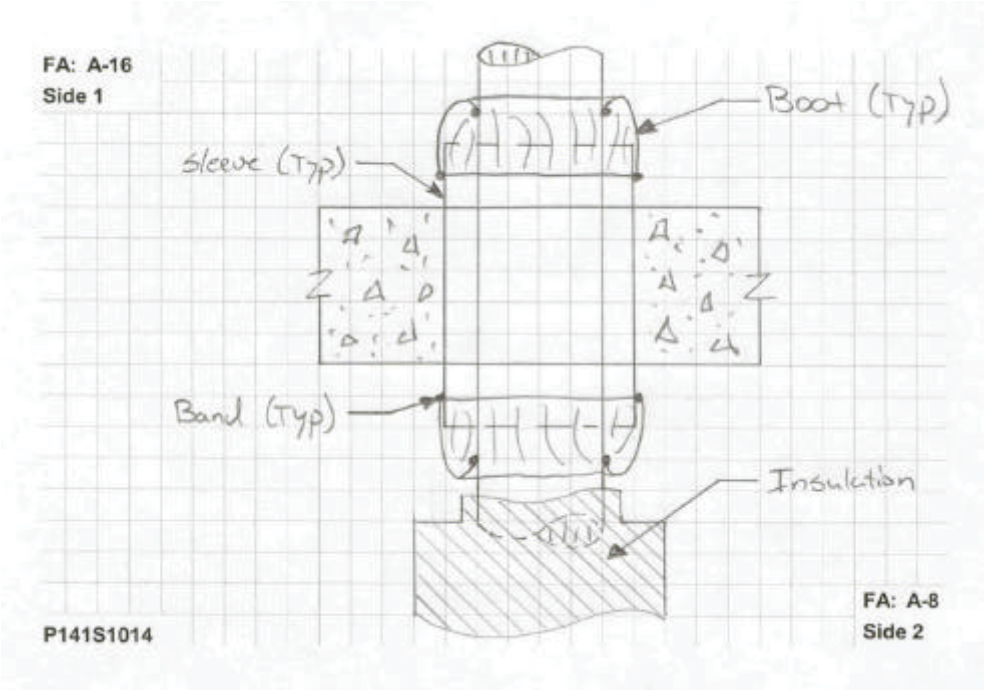

Penetration Seal Data

Appendix: B7

Photos: P141S1014

Fire Area A-16 (Side 1)

Fire Area A-16 (Side 1)

Fire Area A-8 (Side 2)

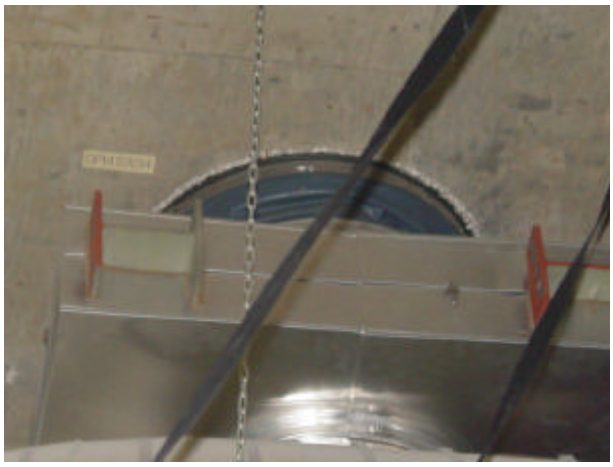

Fire Area A-8 (Side 2)

Penetration Seal Data

Appendix: B7

Heat Affected Zone Review: P141S1014

Fire Area (Side 1) A-16

No issues within Heat Affected Zone

Fire Area (Side 2) A-8

No issues within Heat Affected Zone

Review Distances

(Reference M-663-00017A, Figure 7.2.3-1)

24" Pipe			
L1 & L2 Dist. (ft)	Temp. (°F)	R1 Radius (in)	R2 Radius (in)
0.5	1763	4.8	6.1
1	1615	4.1	5.5
1.5	1480	3.5	4.9
2	1357	3	4.3
2.5	1244	2.5	3.8
3	1141	2	3.3
3.5	1048	1.6	2.9
4	962	1.2	2.5
4.5	884	0.8	2.2
5	813	0.5	1.9
5.5	748	0.2	1.6
6	689	Contact	1.3
6.5	635		1.1
7	585		0.8
7.5	540		0.6
8	499		0.4
8.5	462		0.3
9	427		0.1
9.5	396		Contact

Side 1 Photo

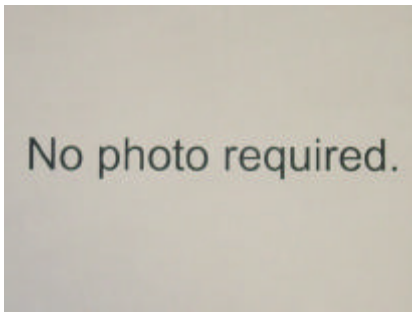

Side 2 Photo

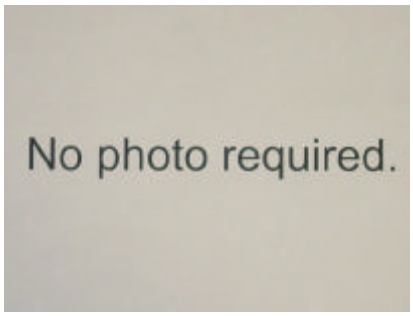

Sketch

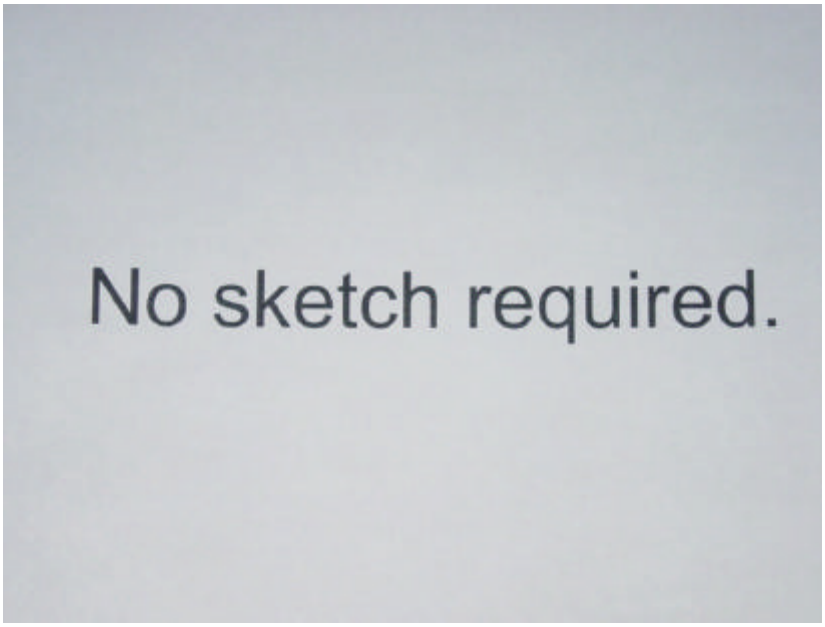

Penetration Seal Data

Appendix: B7

Penetration #: P141W2486

Penetration Type: FB-1 **Fire Area (Side 1):** A-16 **Fire Area (Side 2):** A-26

Loc./Elev.: 2042'-11 **M-0X Dwg:** M-1X1938

1. **Barrier Thickness:** 12"
2. **Opening Size:** 18"D
3. **Penetrants:** (1) 12"P
4. **Sealant Type:** Ceramic Fiber
5. **Damming Side1:** Boot
6. **Damming Side 2:** Boot
7. **Damming Continuity (Acc/Rej):** N/A
8. **Boot Condition (Acc/Rej):** Accept
9. **Sealant Depth:** Assumed per detail
10. **Annular Gap (smallest):** 2"
11. **Gap between pen:** N/A
12. **Barrier Type:** F
13. **Opening Sleeved or Concrete:** Steel
14. **Pipe Insulated:** No

Jeff Suter
Prepared By:

Wayne Aregood
Reviewed By:

Walkdown Comments:

Sketch:

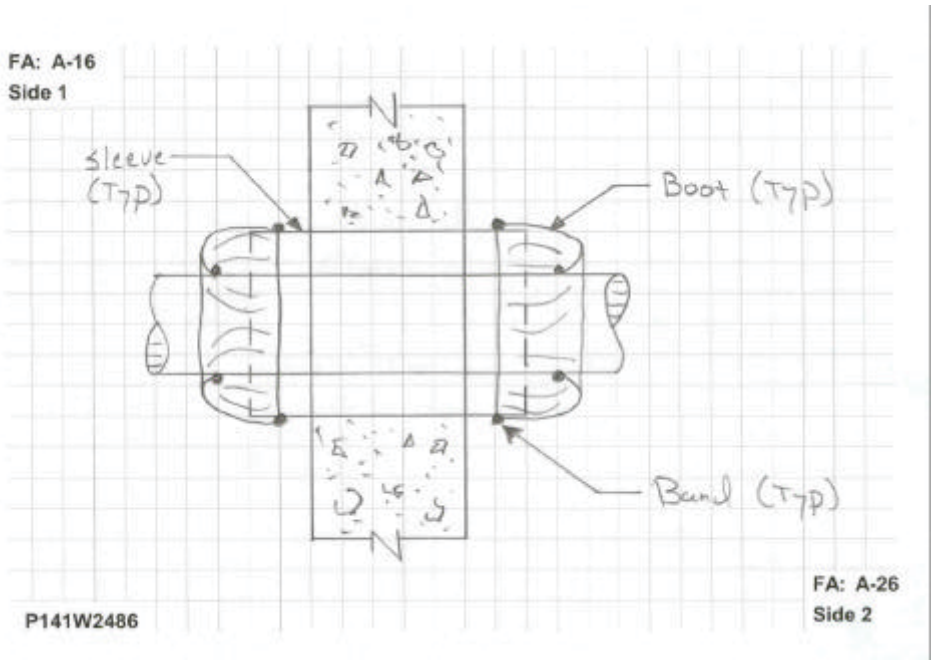

Penetration Seal Data

Appendix: B7

Photos: P141W2486

Fire Area A-16 (Side 1)

Fire Area A-16 (Side 1)

Fire Area A-26 (Side 2)

Fire Area A-26 (Side 2)

Penetration Seal Data

Appendix: B7

Heat Affected Zone Review: P141W2486

Fire Area (Side 1) A-16

No issues within Heat Affected Zone

Fire Area (Side 2) A-26

No issues within Heat Affected Zone

Review Distances

(Reference M-663-00017A, Figure 7.2.3-1)

12" Pipe			
L1 & L2 Dist. (ft)	Temp. (°F)	R1 Radius (in)	R2 Radius (in)
0.5	1712	4.6	5.9
1	1524	3.7	5.1
1.5	1357	3	4.3
2	1209	2.3	3.6
2.5	1078	1.7	3.1
3	962	1.2	2.5
3.5	860	0.7	2.1
4	769	0.3	1.7
4.5	689	Contact	1.3
5	618		1
5.5	555		0.7
6	499		0.4
6.5	450		0.2
7	406		0
7.5	368		Contact

Side 1 Photo

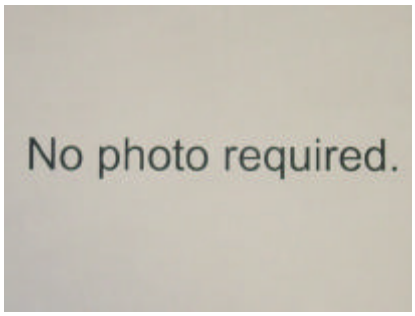

Side 2 Photo

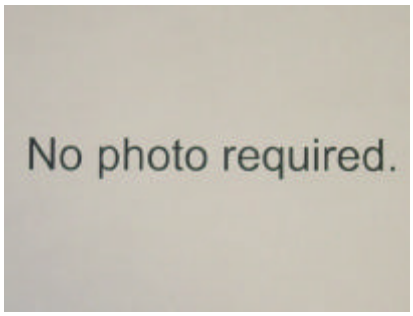

Sketch

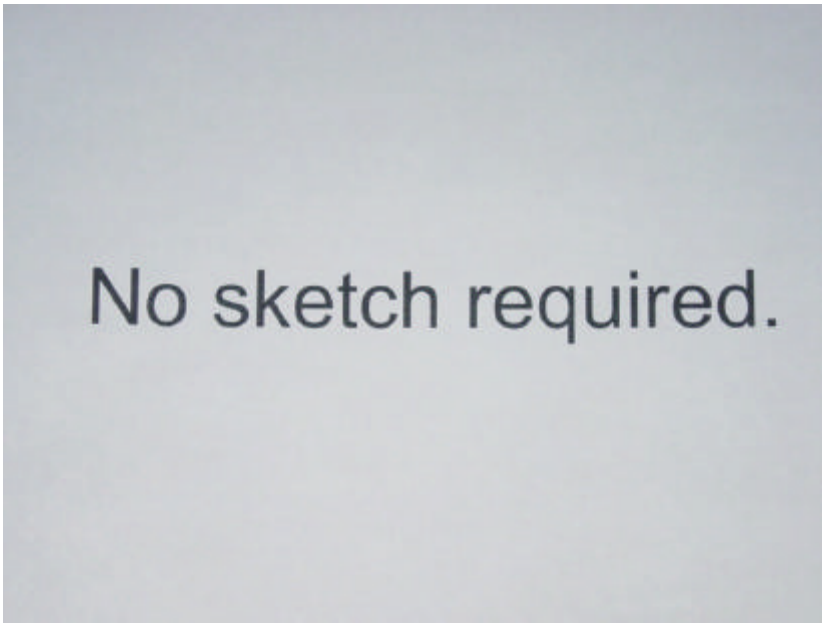

Penetration Seal Data

Appendix: B7

Penetration #: P143W1488

Penetration Type: FB-1 **Fire Area (Side 1):** A-5 **Fire Area (Side 2):** F-4

Loc./Elev.: 2043'-0" **M-0X Dwg:** M-0X1907

1. **Barrier Thickness:** 48" *
2. **Opening Size:** 18"D
3. **Penetrants:** (1) 12"P
4. **Sealant Type:** Ceramic Fiber
5. **Damming Side1:** Boot
6. **Damming Side 2:** Boot
7. **Damming Continuity (Acc/Rej):** N/A
8. **Boot Condition (Acc/Rej):** Accept
9. **Sealant Depth:** 48" *
10. **Annular Gap (smallest):** 2-1/2"
11. **Gap between pen:** N/A
12. **Barrier Type:** A F
13. **Opening Sleeved or Concrete:** Steel
14. **Pipe Insulated:** No

Wayne Aregood
Prepared By:

Jeff Suter
Reviewed By:

Walkdown Comments:

* This wall is located on the East side of the Aux. Bldg and interfaces with the Fuel Bldg, indirectly. Each building is independent with a seismic gap between them, resulting in a 48" wall thickness. The corresponding Fuel Bldg Pen. No. is P621W0224. Queried (LB) QC that was involved with this seal during construction. QC indicated this seal is full depth ceramic fiber and is a separate seal from P621W0224.

Sketch:

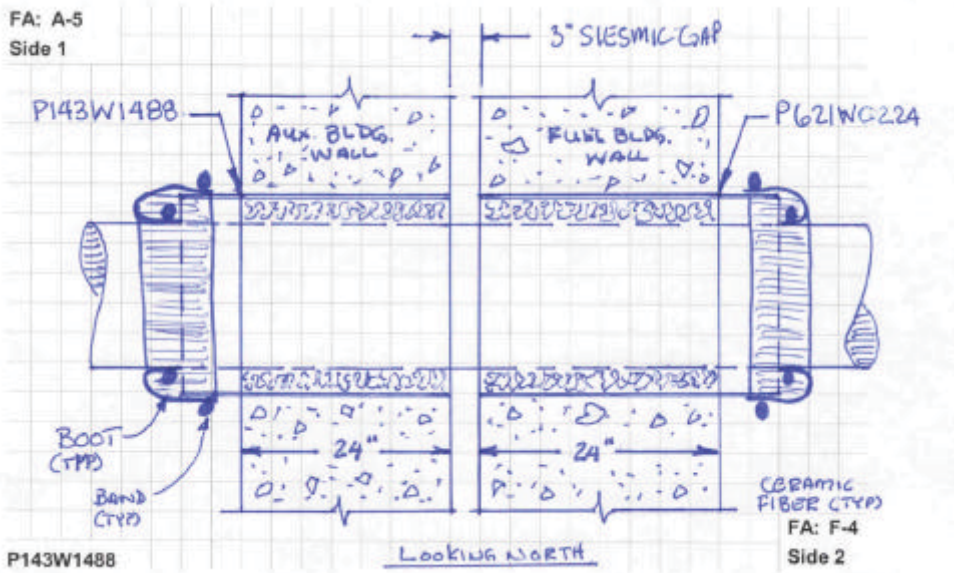

Penetration Seal Data

Appendix: B7

Photos: P143W1488

Fire Area A-5 (Side 1)

Fire Area A-5 (Side 1)

Fire Area F-4 (Side 2)

Fire Area F-4 (Side 2)

Penetration Seal Data

Appendix: B7

Heat Affected Zone Review: P143W1488

Fire Area (Side 1) A-5

1. 5U5A96, 24" Cable Tray, Not within Heat Affected Zone

Fire Area (Side 2) F-4

2. 5U5P01, 24" Cable Tray, Not within Heat Affected Zone. Seismic Gap, No issues.

Review Distances

(Reference M-663-00017A, Figure 7.2.3-1)

12" Pipe			
L1 & L2 Dist. (ft)	Temp. (°F)	R1 Radius (in)	R2 Radius (in)
0.5	1712	4.6	5.9
1	1524	3.7	5.1
1.5	1357	3	4.3
2	1209	2.3	3.6
2.5	1078	1.7	3.1
3	962	1.2	2.5
3.5	860	0.7	2.1
4	769	0.3	1.7
4.5	689	Contact	1.3
5	618		1
5.5	555		0.7
6	499		0.4
6.5	450		0.2
7	406		0
7.5	368		Contact

Side 1 Photo

No photo required.

Side 2 Photo

No photo required.

Sketch

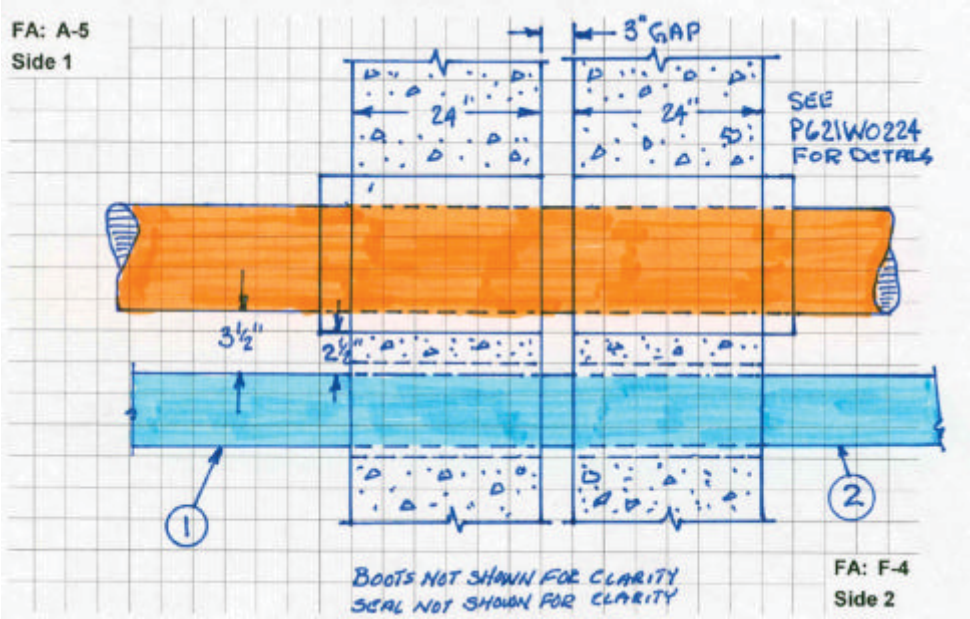

Penetration Seal Data

Appendix: B7

Penetration #: P143W1489

Penetration Type: FB-1 **Fire Area (Side 1):** A-5 **Fire Area (Side 2):** F-4

Loc./Elev.: 2043'-0" **M-0X Dwg:** M-0X1907

1. **Barrier Thickness:** 48" *
2. **Opening Size:** 18"D
3. **Penetrants:** (1) 12"P
4. **Sealant Type:** Ceramic Fiber
5. **Damming Side1:** Boot
6. **Damming Side 2:** Boot
7. **Damming Continuity (Acc/Rej):** N/A
8. **Boot Condition (Acc/Rej):** Accept
9. **Sealant Depth:** 48" *
10. **Annular Gap (smallest):** 2"
11. **Gap between pen:** N/A
12. **Barrier Type:** A F
13. **Opening Sleeved or Concrete:** Steel
14. **Pipe Insulated:** No

Wayne Aregood
Prepared By:

Jeff Suter
Reviewed By:

Walkdown Comments:

* This wall is located on the East side of the Aux. Bldg and interfaces with the Fuel Bldg, indirectly. Each building is independent with a seismic gap between them, resulting in a 48" wall thickness. The corresponding Fuel Bldg Pen. No. is P621W0221. Queried (LB) QC that was involved with this seal during construction. QC indicated this seal is full depth ceramic fiber and is a separate seal from P621W0221.

Sketch:

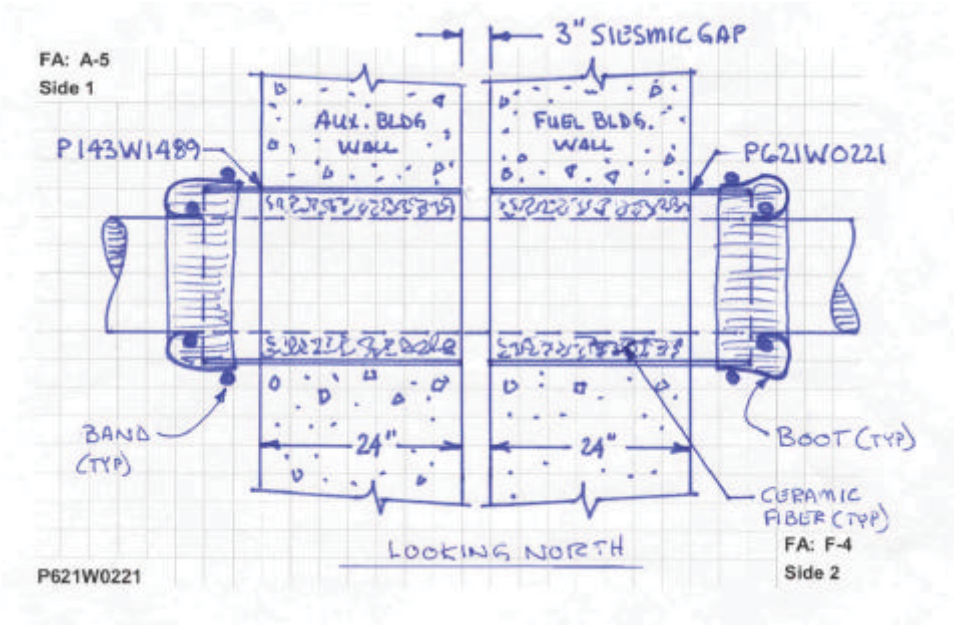

Penetration Seal Data

Appendix: B7

Photos: P143W1489

Fire Area A-5 (Side 1)

Fire Area A-5 (Side 1)

Fire Area F-4 (Side 2)

Fire Area F-4 (Side 2)

Penetration Seal Data

Appendix: B7

Heat Affected Zone Review: P143W1489

Fire Area (Side 1) A-5

1. 5U4B5Q, 1" Cond.: Not within Heat Affected Zone
2. 5J1W2B, 3" Cond.: Not within Heat Affected Zone
3. 5U5A1L, 1-1/2" Cond.: Not within Heat Affected Zone
4. 5J1W3L, 1-1/2" Cond.: Not within Heat Affected Zone
5. 5U5A96, 24" Cable Tray: Not within Heat Affected Zone

Fire Area (Side 2) F-4

See P621W0221 for Detail, No issues within Heat Affected Zone.

Review Distances

(Reference M-663-00017A, Figure 7.2.3-1)

12" Pipe			
L1 & L2 Dist. (ft)	Temp. (°F)	R1 Radius (in)	R2 Radius (in)
0.5	1712	4.6	5.9
1	1524	3.7	5.1
1.5	1357	3	4.3
2	1209	2.3	3.6
2.5	1078	1.7	3.1
3	962	1.2	2.5
3.5	860	0.7	2.1
4	769	0.3	1.7
4.5	689	Contact	1.3
5	618		1
5.5	555		0.7
6	499		0.4
6.5	450		0.2
7	406		0
7.5	368		Contact

Side 1 Photo

Side 2 Photo

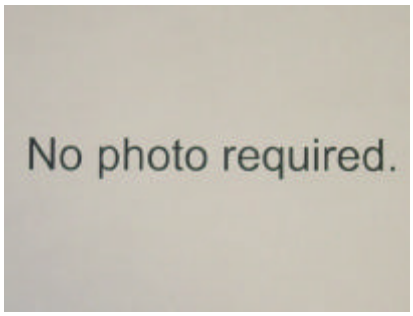

Sketch

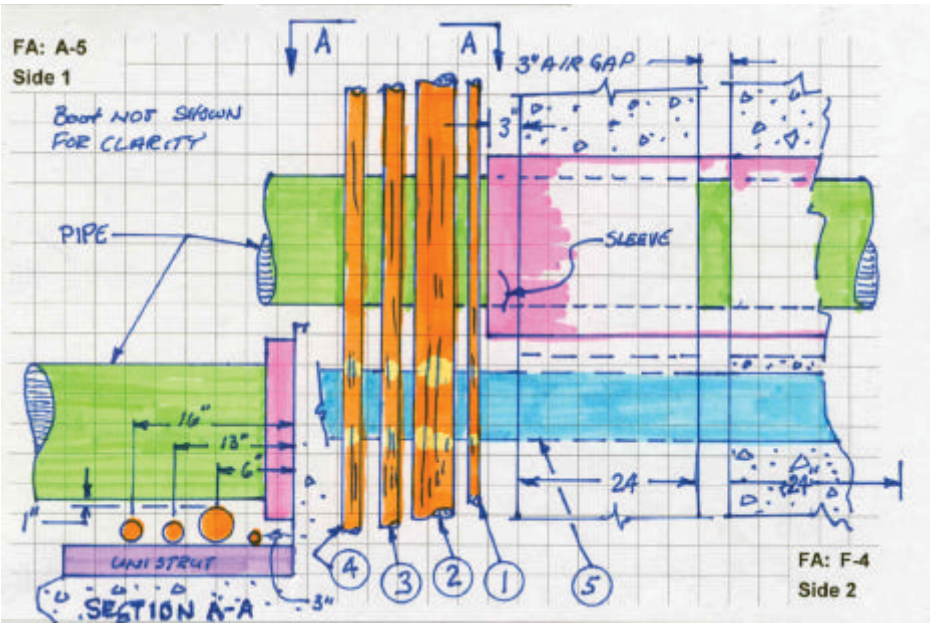

Penetration Seal Data

Appendix: B7

Penetration #: P145S1019

Penetration Type: FB-1 **Fire Area (Side 1):** A-23 **Fire Area (Side 2):** A-15

Loc./Elev.: 2026'-0" **M-0X Dwg:** M-1X1352

1. **Barrier Thickness:** 24"
2. **Opening Size:** 12"D
3. **Penetrants:** (1) 8" P
4. **Sealant Type:** Ceramic Fiber
5. **Damming Side1:** N/A
6. **Damming Side 2:** N/A
7. **Damming Continuity (Acc/Rej):** N/A
8. **Boot Condition (Acc/Rej):** Not Reviewed
9. **Sealant Depth:** Not Reviewed
10. **Annular Gap (smallest):** Not Reviewed
11. **Gap between pen:** Not Reviewed
12. **Barrier Type:** F P R W
13. **Opening Sleeved or Concrete:** Steel
14. **Pipe Insulated:** No

Jeff Suter
Prepared By:

Don Garbe
Reviewed By:

Walkdown Comments:

The walkdown review was based on design location of the penetration, as identified on M-1X1352

Sketch:

FA: A-23
SIDE 1

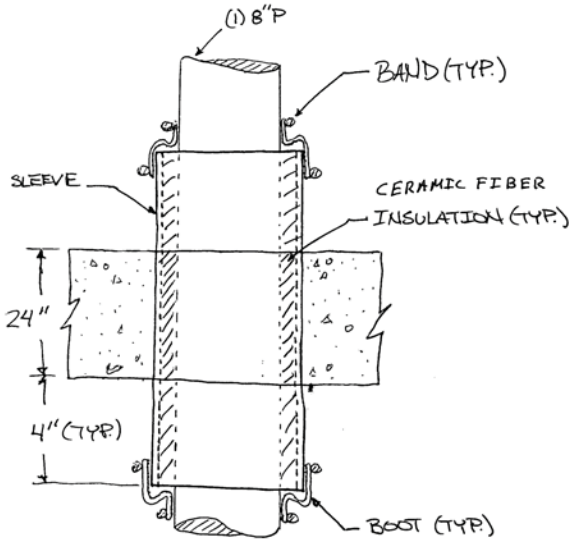

P145S1019

FA: A-15
SIDE 2

Penetration Seal Data

Appendix: B7

Penetration #: P152W2585

Penetration Type: FB-1 **Fire Area (Side 1):** A-19 **Fire Area (Side 2):** A-22

Loc./Elev.: 2064'-1 1 **M-0X Dwg:** M-0X1947

1. **Barrier Thickness:** 12"
2. **Opening Size:** 14"D
3. **Penetrants:** (1) 10"P
4. **Sealant Type:** Ceramic Fiber
5. **Damming Side1:** Boot
6. **Damming Side 2:** Boot
7. **Damming Continuity (Acc/Rej):** N/A
8. **Boot Condition (Acc/Rej):** Accept
9. **Sealant Depth:** Assumed Per Detail
10. **Annular Gap (smallest):** 1"
11. **Gap between pen:** N/A
12. **Barrier Type:** A F
13. **Opening Sleeved or Concrete:** Steel
14. **Pipe Insulated:** No

Wayne Aregood
Prepared By:

Jeff Suter
Reviewed By:

Walkdown Comments:
Wall thickness determined by Drawing C-1C1521.

Sketch:

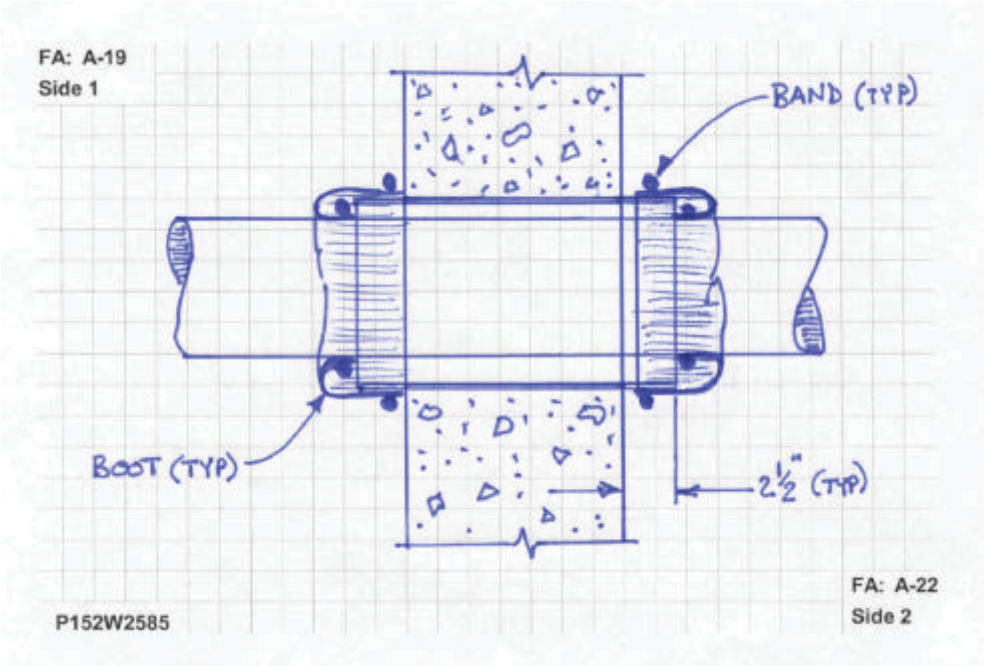

Penetration Seal Data

Appendix: B7

Photos: P152W2585

Fire Area A-19 (Side 1)

Fire Area A-19 (Side 1)

Fire Area A-22 (Side 2)

Fire Area A-22 (Side 2)

Penetration Seal Data

Appendix: B7

Heat Affected Zone Review: P152W2585

Fire Area (Side 1) A-19

No issues within Heat Affected Zone

Fire Area (Side 2) A-22

No issues within Heat Affected Zone

Review Distances

(Reference M-663-00017A, Figure 7.2.3-1)

10" Pipe			
L1 & L2 Dist. (ft)	Temp. (°F)	R1 Radius (in)	R2 Radius (in)
0.5	1697	4.5	5.8
1	1497	3.6	4.9
1.5	1321	2.8	4.1
2	1167	2.1	3.5
2.5	1032	1.5	2.8
3	914	1	2.3
3.5	810	0.5	1.8
4	719	0.1	1.4
4.5	639	Contact	1.1
5	569		0.8
5.5	508		0.5
6	454		0.2
6.5	406		0
7	365		Contact

Side 1 Photo

No photo required.

Side 2 Photo

No photo required.

Sketch

No sketch required.

Penetration Seal Data

Appendix: B7

Penetration #: P152W2617

Penetration Type: FB-1 **Fire Area (Side 1):** A-19 **Fire Area (Side 2):** A-22

Loc./Elev.: 2064'-11 **M-0X Dwg:** M-1X1948

1. **Barrier Thickness:** 10-1/2"
2. **Opening Size:** 12"D
3. **Penetrants:** (1) 8"P
4. **Sealant Type:** Ceramic Fiber
5. **Damming Side1:** Boot
6. **Damming Side 2:** Boot
7. **Damming Continuity (Acc/Rej):** N/A
8. **Boot Condition (Acc/Rej):** Accept
9. **Sealant Depth:** Assumed Per Detail
10. **Annular Gap (smallest):** 0"
11. **Gap between pen:** N/A
12. **Barrier Type:** A F
13. **Opening Sleeved or Concrete:** Steel
14. **Pipe Insulated:** No

Wayne Aregood
Prepared By:

Jeff Suter
Reviewed By:

Walkdown Comments:

Barrier thickness based on drawing C-1C1521. A-22 (side 2) concrete chipped away to allow boot attachment.

Sketch:

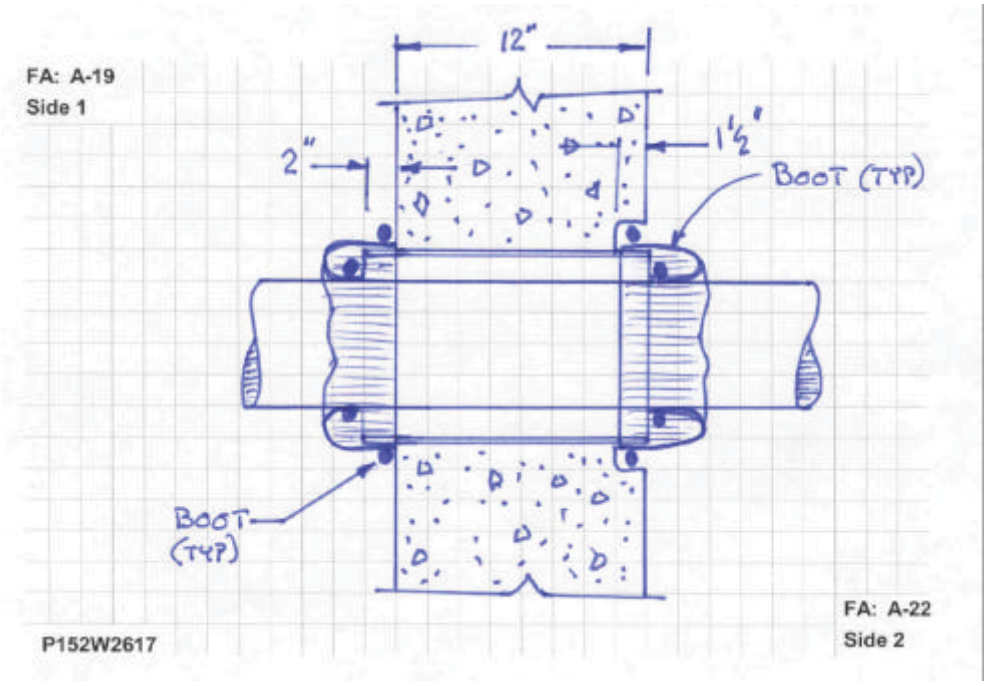

Penetration Seal Data

Appendix: B7

Photos: P152W2617

Fire Area A-19 (Side 1)

Fire Area A-19 (Side 1)

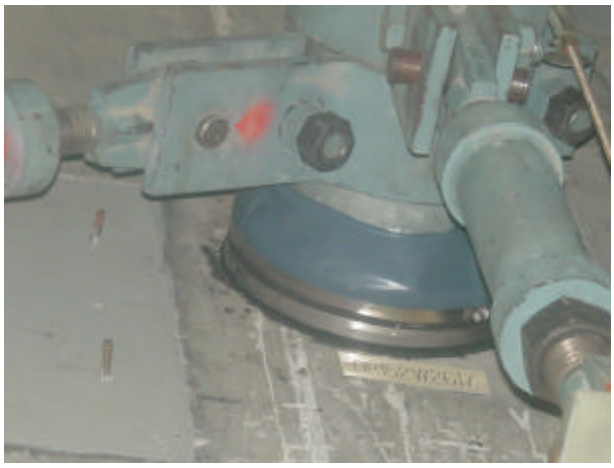

Fire Area A-22 (Side 2)

Fire Area A-22 (Side 2)

Penetration Seal Data

Appendix: B7

Heat Affected Zone Review: P152W2617

Fire Area (Side 1) A-19

No issues within Heat Affected Zone

Fire Area (Side 2) A-22

1. 1-1/2" Cond. 5J1262 (seismic Monitor) within Heat Affected Zone. Further review determined that this conduit is not PFSSD. Set-route control is necessary.
2. 1-1/2" Cond. 1J3A1B, not within Heat Affected Zone

Review Distances

(Reference M-663-00017A, Figure 7.2.3-1)

8" Pipe			
L1 & L2 Dist. (ft)	Temp. (°F)	R1 Radius (in)	R2 Radius (in)
0.5	1677	4.4	5.8
1	1463	3.4	4.8
1.5	1277	2.6	3.9
2	1116	1.9	3.2
2.5	976	1.2	2.6
3	855	0.7	2
3.5	750	0.2	1.6
4	659	Contact	1.2
4.5	581		0.8
5	512		0.5
5.5	453		0.2
6	402		0
6.5	358		Contact

Side 1 Photo

No photo required.

Side 2 Photo

Sketch

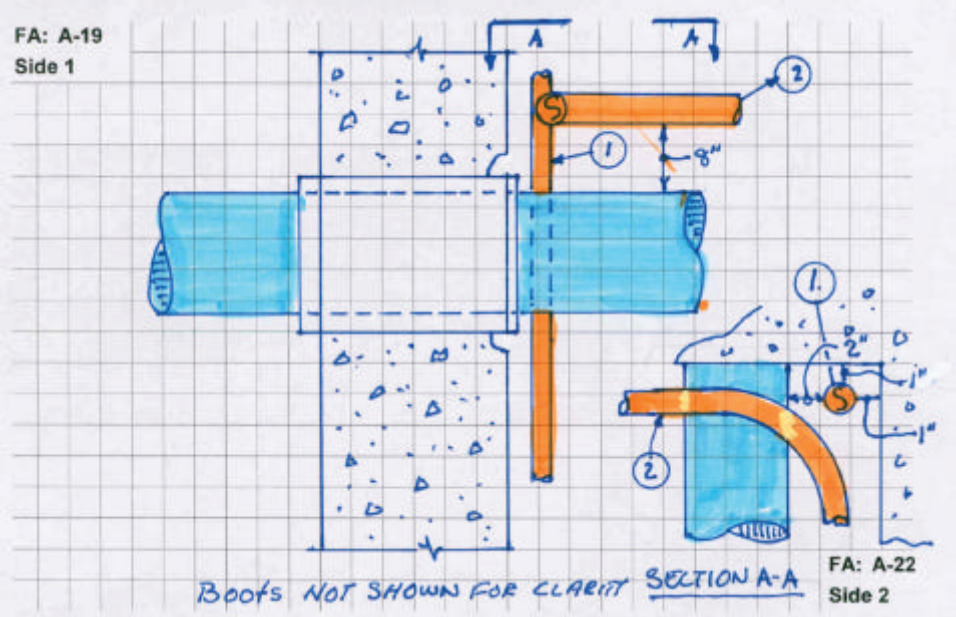

Penetration Seal Data

Appendix: B7

Penetration #: P311W0839

Penetration Type: FB-1 **Fire Area (Side 1):** C-1 **Fire Area (Side 2):** CC-1

Loc./Elev.: 1976'-0" **M-0X Dwg:** M-1X3901

1. **Barrier Thickness:** 36"
2. **Opening Size:** 36"D
3. **Penetrants:** (1) 30"P
4. **Sealant Type:** Ceramic Fiber
5. **Damming Side1:** Boot
6. **Damming Side 2:** Boot
7. **Damming Continuity (Acc/Rej):** N/A
8. **Boot Condition (Acc/Rej):** Accept
9. **Sealant Depth:** Assumed Per Detail
10. **Annular Gap (smallest):** 2"
11. **Gap between pen:** N/A
12. **Barrier Type:** A F W
13. **Opening Sleeved or Concrete:** Steel
14. **Pipe Insulated:** No

Wayne Aregood
Prepared By:

Jeff Suter
Reviewed By:

Walkdown Comments:

Barrier thickness determined by Drawing C-1C3111.

Sketch:

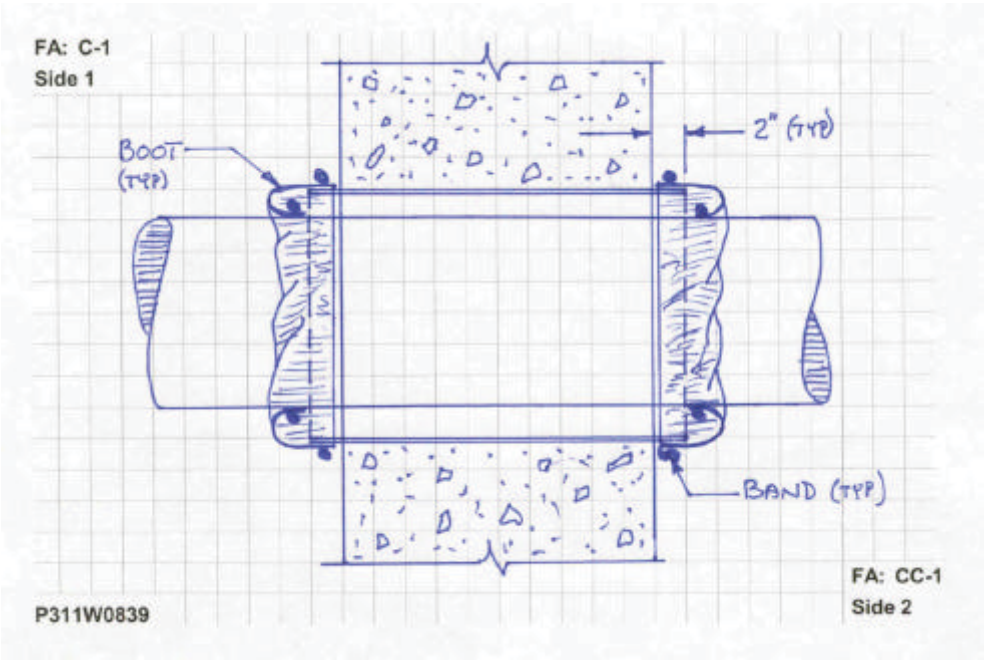

Penetration Seal Data

Appendix: B7

Photos: P311W0839

Fire Area C-1 (Side 1)

Fire Area C-1 (Side 1)

Fire Area CC-1 (Side 2)

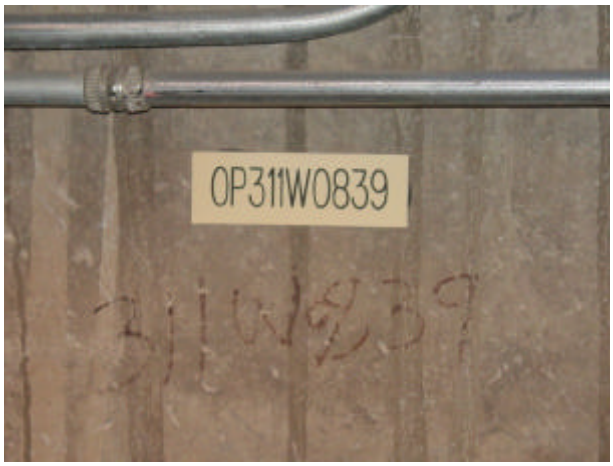

Fire Area CC-1 (Side 2)

Penetration Seal Data

Appendix: B7

Heat Affected Zone Review: P311W0839

Fire Area (Side 1) C-1

1. 1-1/2" Cond. 5J1A1W: Not within Heat Affected Zone.

Fire Area (Side 2) CC-1

1. No issues within Heat Affected Zone.

Review Distances

(Reference M-663-00017A, Figure 7.2.3-1)

30" Pipe			
L1 & L2 Dist. (ft)	Temp. (°F)	R1 Radius (in)	R2 Radius (in)
0.5	1706	4.5	5.9
1	1513	3.7	5
1.5	1342	2.9	4.2
2	1192	2.2	3.6
2.5	1059	1.6	3
3	942	1.1	2.4
3.5	839	0.6	2
4	748	0.2	1.6
4.5	668	Contact	1.2
5	597		0.9
5.5	535		0.6
6	480		0.4
6.5	432		0.1
7	389		Contact

Side 1 Photo

No photo required.

Side 2 Photo

No photo required.

Sketch

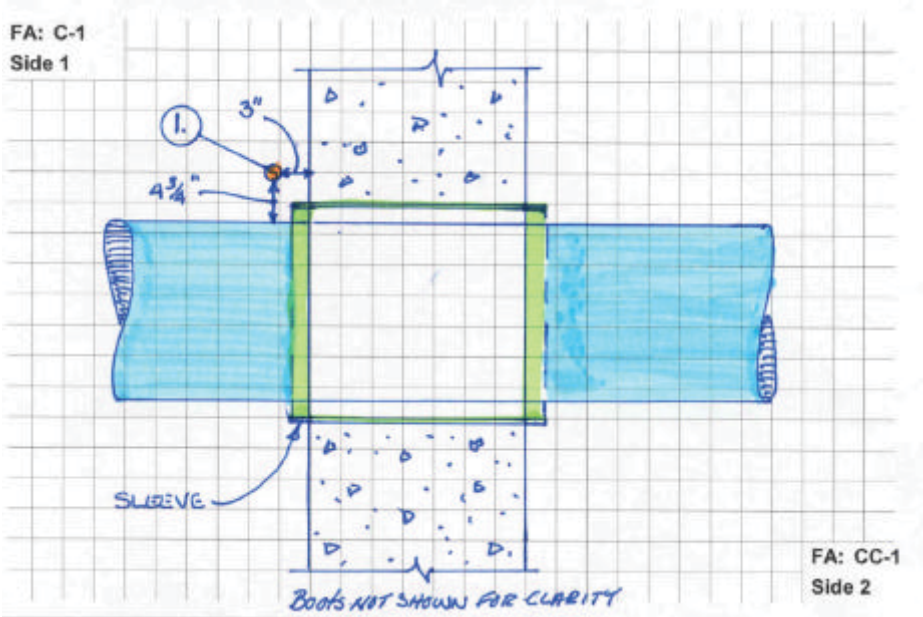

Penetration Seal Data

Appendix: B7

Penetration #: P321S0085

Penetration Type: FB-1 **Fire Area (Side 1):** C-6 **Fire Area (Side 2):** C-1

Loc./Elev.: 1984'-0" **M-0X Dwg:** M-1X3211

1. **Barrier Thickness:** 8"
2. **Opening Size:** 12"D
3. **Penetrants:** (1) 8"P
4. **Sealant Type:** Ceramic Fiber
5. **Damming Side1:** Boot
6. **Damming Side 2:** Boot
7. **Damming Continuity (Acc/Rej):** N/A
8. **Boot Condition (Acc/Rej):** Accept
9. **Sealant Depth:** * Assumed Per Detail
10. **Annular Gap (smallest):** 1"
11. **Gap between pen:** N/A
12. **Barrier Type:** F
13. **Opening Sleeved or Concrete:** Steel
14. **Pipe Insulated:** No

Wayne Aregood
Prepared By:

Jeff Suter
Reviewed By:

Walkdown Comments:

Slab thickness based on drawing C-1C3211. * 12" min Ceramic Fiber required by Detail. Pipes are not insulated locally at boot and pipe interface.

Sketch:

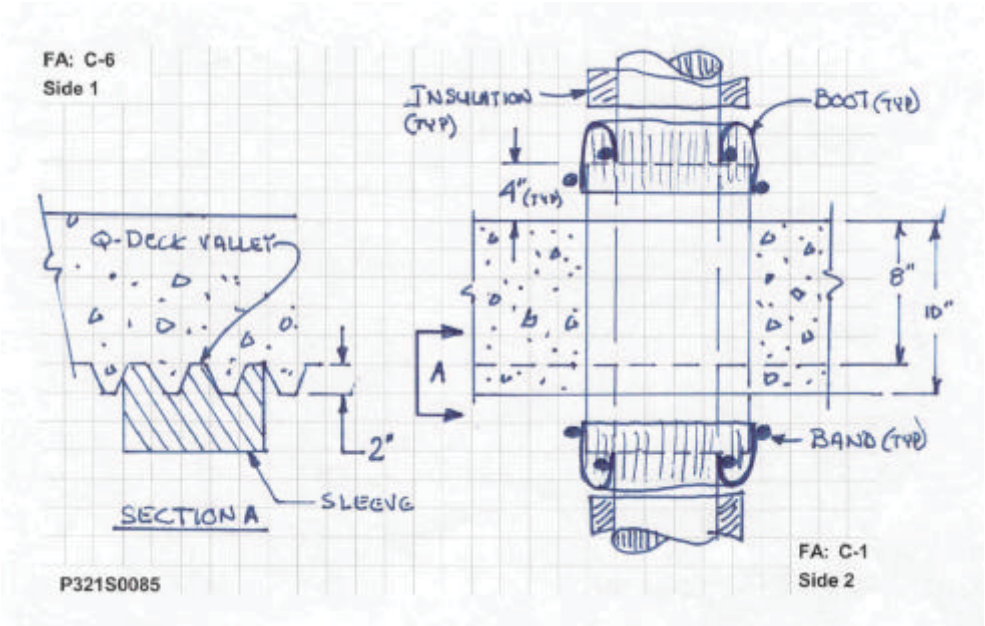

Penetration Seal Data

Appendix: B7

Photos: P321S0085

Fire Area C-6 (Side 1)

Fire Area C-6 (Side 1)

Fire Area C-1 (Side 2)

Fire Area C-1 (Side 2)

Penetration Seal Data

Appendix: B7

Heat Affected Zone Review: P321S0085

Fire Area (Side 1) C-6

No issues within Heat Affected Zone

Fire Area (Side 2) C-1

No issues within Heat Affected Zone

Review Distances

(Reference M-663-00017A, Figure 7.2.3-1)

8" Pipe			
L1 & L2 Dist. (ft)	Temp. (°F)	R1 Radius (in)	R2 Radius (in)
0.5	1677	4.4	5.8
1	1463	3.4	4.8
1.5	1277	2.6	3.9
2	1116	1.9	3.2
2.5	976	1.2	2.6
3	855	0.7	2
3.5	750	0.2	1.6
4	659	Contact	1.2
4.5	581		0.8
5	512		0.5
5.5	453		0.2
6	402		0
6.5	358		Contact

Side 1 Photo

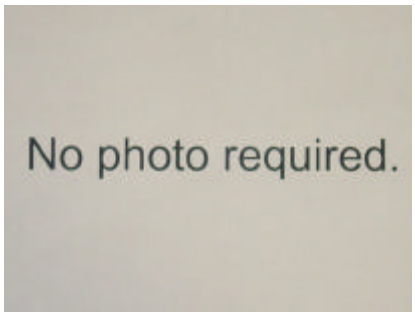

Side 2 Photo

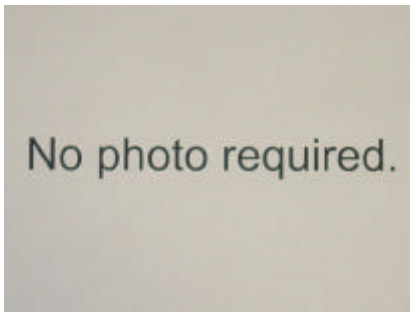

Sketch

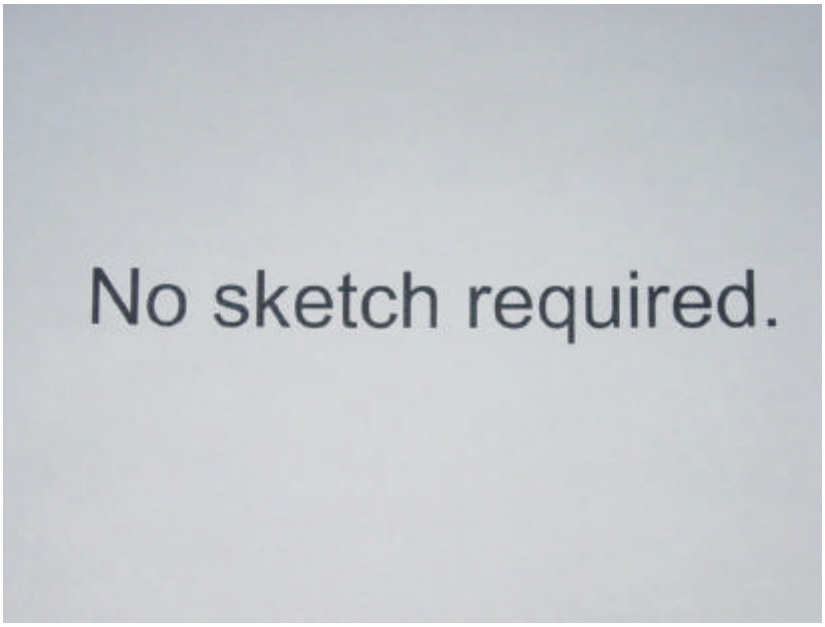

Penetration Seal Data

Appendix: B7

Penetration #: P321S0086

Penetration Type: FB-1 **Fire Area (Side 1):** C-6 **Fire Area (Side 2):** C-1

Loc./Elev.: 1984'-0" **M-0X Dwg:** M-1X3211

1. **Barrier Thickness:** 8"
2. **Opening Size:** 12"D
3. **Penetrants:** (1) 8"P
4. **Sealant Type:** Ceramic Fiber
5. **Damming Side1:** Boot
6. **Damming Side 2:** Boot
7. **Damming Continuity (Acc/Rej):** N/A
8. **Boot Condition (Acc/Rej):** Accept
9. **Sealant Depth:** * Assumed Per Detail
10. **Annular Gap (smallest):** 1-1/2"
11. **Gap between pen:** N/A
12. **Barrier Type:** F
13. **Opening Sleeved or Concrete:** Steel
14. **Pipe Insulated:** No

Wayne Aregood
Prepared By:

Jeff Suter
Reviewed By:

Walkdown Comments:

Slab thickness based on drawing C-1C3211. * 12" min Ceramic Fiber required by Detail. Pipes are not insulated locally at boot and pipe interface.

Sketch:

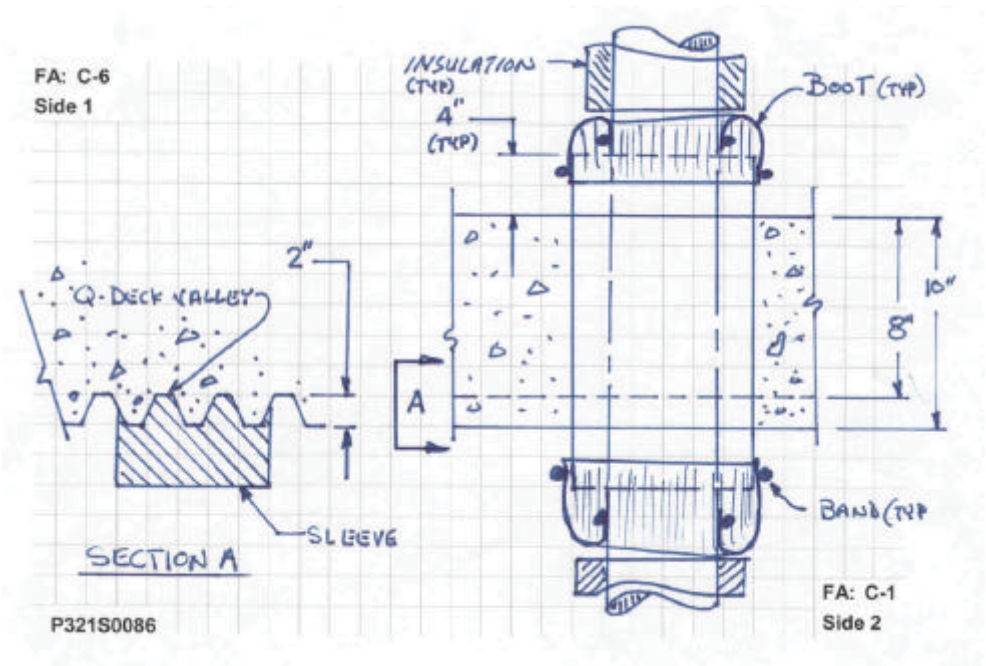

Penetration Seal Data

Appendix: B7

Photos: P321S0086

Fire Area C-6 (Side 1)

Fire Area C-6 (Side 1)

Fire Area C-1 (Side 2)

Fire Area C-1 (Side 2)

Penetration Seal Data

Appendix: B7

Heat Affected Zone Review: P321S0086

Fire Area (Side 1) C-6

No issues within Heat Affected Zone

Fire Area (Side 2) C-1

No issues within Heat Affected Zone

Review Distances

(Reference M-663-00017A, Figure 7.2.3-1)

8" Pipe			
L1 & L2 Dist. (ft)	Temp. (°F)	R1 Radius (in)	R2 Radius (in)
0.5	1677	4.4	5.8
1	1463	3.4	4.8
1.5	1277	2.6	3.9
2	1116	1.9	3.2
2.5	976	1.2	2.6
3	855	0.7	2
3.5	750	0.2	1.6
4	659	Contact	1.2
4.5	581		0.8
5	512		0.5
5.5	453		0.2
6	402		0
6.5	358		Contact

Side 1 Photo

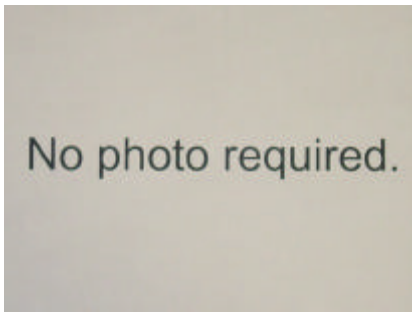

Side 2 Photo

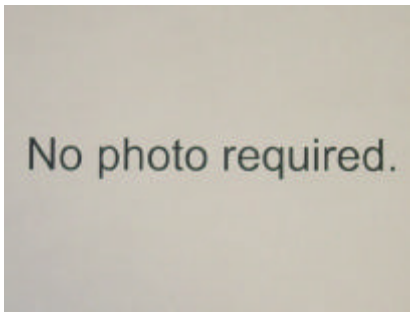

Sketch

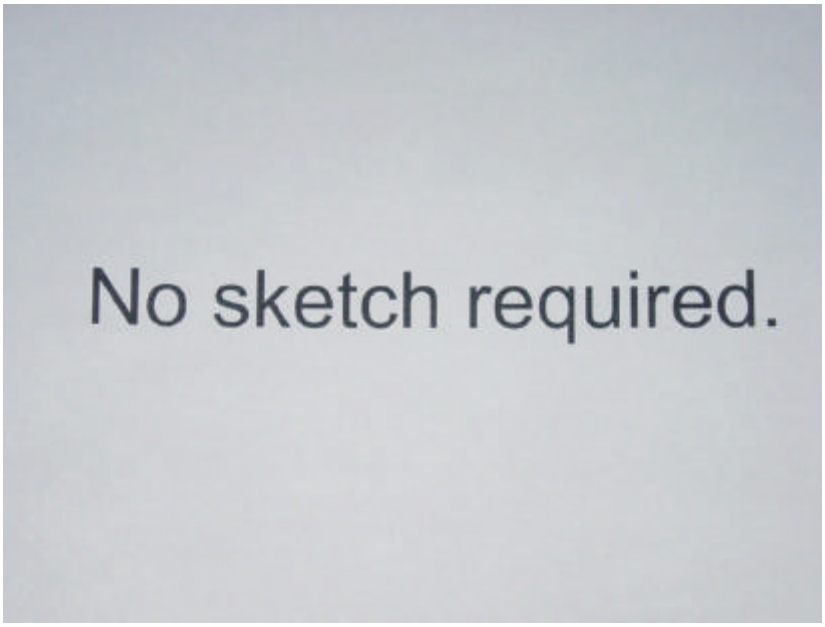

Penetration Seal Data

Appendix: B7

Penetration #: P321S0123

Penetration Type: FB-1 **Fire Area (Side 1):** C-6 **Fire Area (Side 2):** C-1

Loc./Elev.: 1984'-0" **M-0X Dwg:** M-1X3211

1. **Barrier Thickness:** 8"
2. **Opening Size:** 12"D
3. **Penetrants:** (1) 8"P
4. **Sealant Type:** Ceramic Fiber
5. **Damming Side1:** Boot
6. **Damming Side 2:** Boot
7. **Damming Continuity (Acc/Rej):** N/A
8. **Boot Condition (Acc/Rej):** Accept
9. **Sealant Depth:** Assumed Per Detail
10. **Annular Gap (smallest):** 1-1/2"
11. **Gap between pen:** N/A
12. **Barrier Type:** F
13. **Opening Sleeved or Concrete:** Steel
14. **Pipe Insulated:** No

Wayne Aregood
Prepared By:

Jeff Suter
Reviewed By:

Walkdown Comments:
Slab thickness based on drawing C-1C3211.

Sketch:

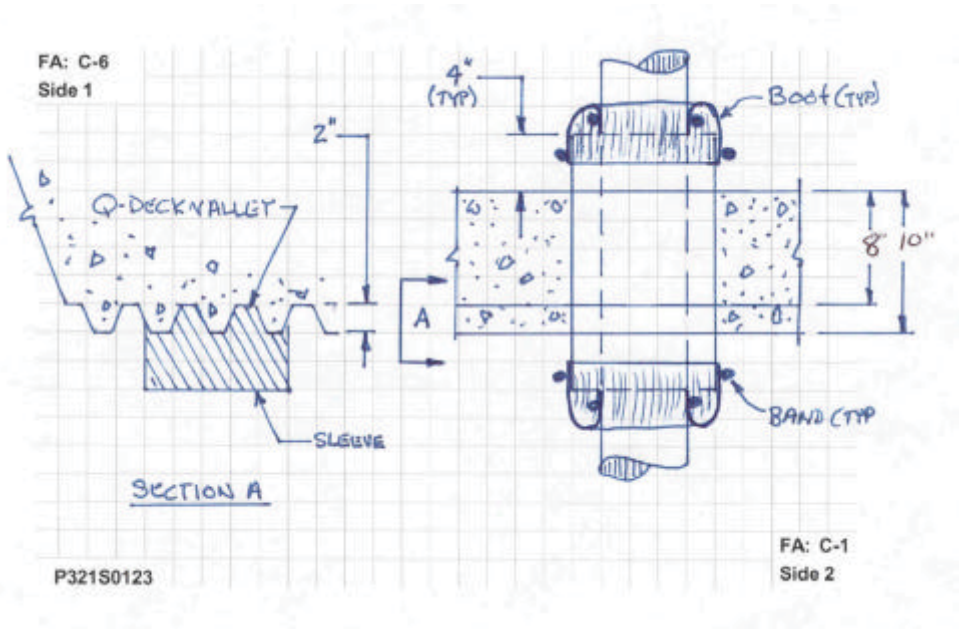

Penetration Seal Data

Appendix: B7

Photos: P321S0123

Fire Area C-6 (Side 1)

Fire Area C-6 (Side 1)

Fire Area C-1 (Side 2)

Fire Area C-1 (Side 2)

Penetration Seal Data

Appendix: B7

Heat Affected Zone Review: P321S0123

Fire Area (Side 1) C-6

No issues within Heat Affected Zone

Fire Area (Side 2) C-1

No issues within Heat Affected Zone

Review Distances

(Reference M-663-00017A, Figure 7.2.3-1)

8" Pipe			
L1 & L2 Dist. (ft)	Temp. (°F)	R1 Radius (in)	R2 Radius (in)
0.5	1677	4.4	5.8
1	1463	3.4	4.8
1.5	1277	2.6	3.9
2	1116	1.9	3.2
2.5	976	1.2	2.6
3	855	0.7	2
3.5	750	0.2	1.6
4	659	Contact	1.2
4.5	581		0.8
5	512		0.5
5.5	453		0.2
6	402		0
6.5	358		Contact

Side 1 Photo

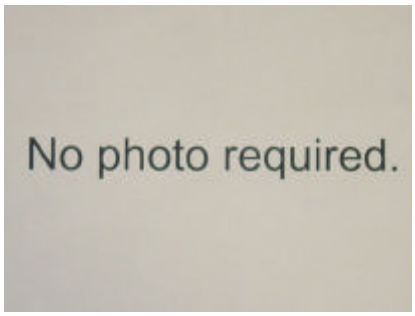

Side 2 Photo

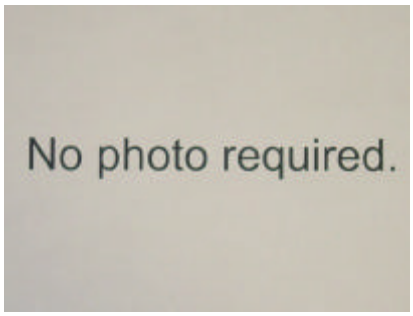

Sketch

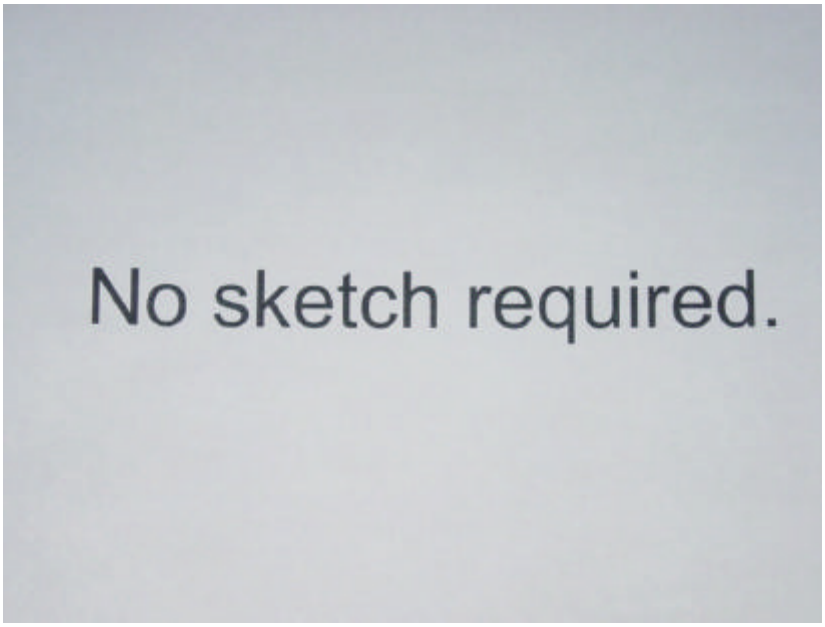

Penetration Seal Data

Appendix: B7

Penetration #: P611W0082

Penetration Type: FB-1 **Fire Area (Side 1):** F-1 **Fire Area (Side 2):** F-2

Loc./Elev.: 2012'-10 **M-0X Dwg:** M-1X6906

1. **Barrier Thickness:** 24"
2. **Opening Size:** 12"D
3. **Penetrants:** (1) 8"P
4. **Sealant Type:** Ceramic Fiber
5. **Damming Side1:** Boot
6. **Damming Side 2:** Boot
7. **Damming Continuity (Acc/Rej):** N/A
8. **Boot Condition (Acc/Rej):** Accept
9. **Sealant Depth:** Assumed Per Detail
10. **Annular Gap (smallest):** 1-1/2"
11. **Gap between pen:** N/A
12. **Barrier Type:** F
13. **Opening Sleeved or Concrete:** Steel
14. **Pipe Insulated:** No

Wayne Aregood
Prepared By:

Jeff Suter
Reviewed By:

Walkdown Comments:
Wall thickness determined by Drawing C-1C6111

Sketch:

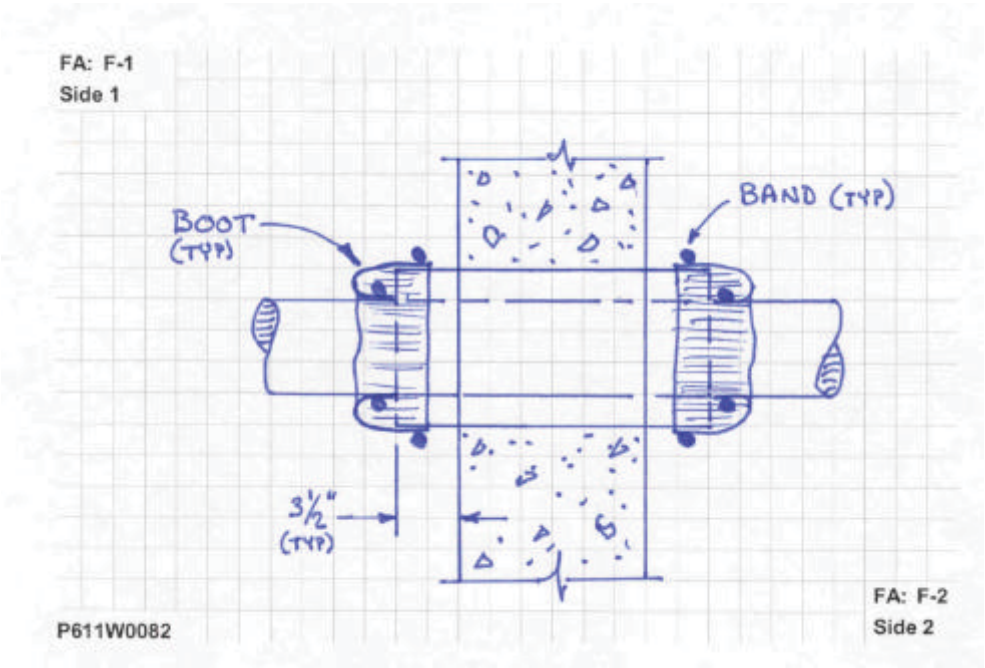

Penetration Seal Data

Appendix: B7

Photos: P611W0082

Fire Area F-1 (Side 1)

Fire Area F-1 (Side 1)

Fire Area F-2 (Side 2)

Fire Area F-2 (Side 2)

Penetration Seal Data

Appendix: B7

Heat Affected Zone Review: P611W0082

Fire Area (Side 1) F-1

1. 1" Pipe, Inspector Test for FP: No issues within Heat Affected Zone.

Fire Area (Side 2) F-2

2. 5U6015, 3/4" Cond. for thermostat.: No issue

Review Distances

(Reference M-663-00017A, Figure 7.2.3-1)

8" Pipe			
L1 & L2 Dist. (ft)	Temp. (°F)	R1 Radius (in)	R2 Radius (in)
0.5	1677	4.4	5.8
1	1463	3.4	4.8
1.5	1277	2.6	3.9
2	1116	1.9	3.2
2.5	976	1.2	2.6
3	855	0.7	2
3.5	750	0.2	1.6
4	659	Contact	1.2
4.5	581		0.8
5	512		0.5
5.5	453		0.2
6	402		0
6.5	358		Contact

Side 1 Photo

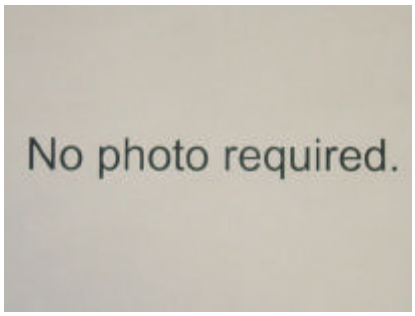

Side 2 Photo

Sketch

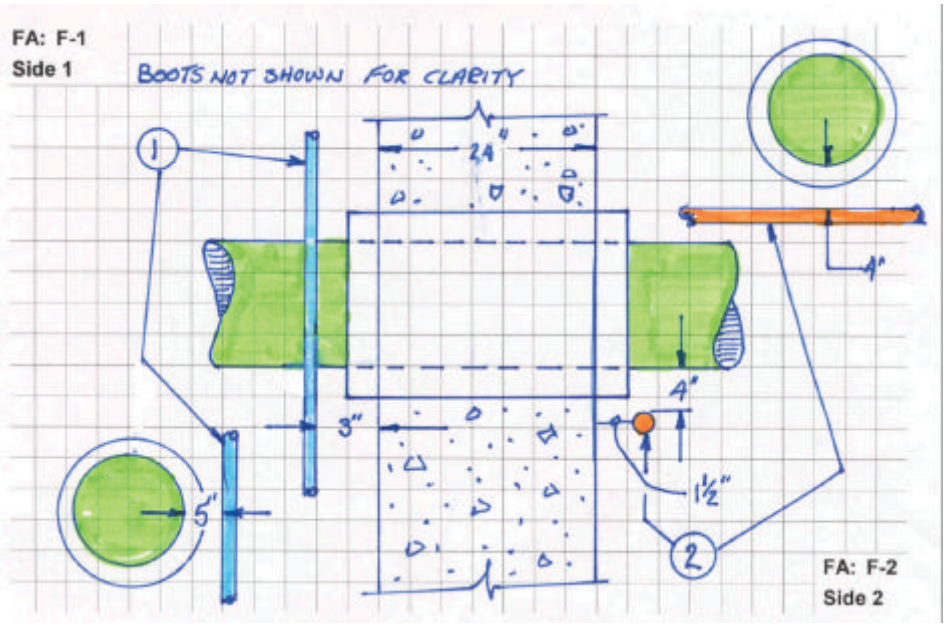

Penetration Seal Data

Appendix: B7

Penetration #: P611W0197

Penetration Type: FB-1 **Fire Area (Side 1):** F-2 **Fire Area (Side 2):** F-3

Loc./Elev.: 2019'-0" **M-0X Dwg:** M-1X6906

1. **Barrier Thickness:** 12"
2. **Opening Size:** 16"D
3. **Penetrants:** (1) 12"P
4. **Sealant Type:** Ceramic Fiber
5. **Damming Side1:** Boot
6. **Damming Side 2:** Boot
7. **Damming Continuity (Acc/Rej):** N/A
8. **Boot Condition (Acc/Rej):** Accept
9. **Sealant Depth:** Assumed Per Detail
10. **Annular Gap (smallest):** 1-1/4"
11. **Gap between pen:** N/A
12. **Barrier Type:** F
13. **Opening Sleeved or Concrete:** Steel
14. **Pipe Insulated:** No

Wayne Aregood
Prepared By:

Jeff Suter
Reviewed By:

Walkdown Comments:

Wall thickness determined by Drawing C-1C6111.

Sketch:

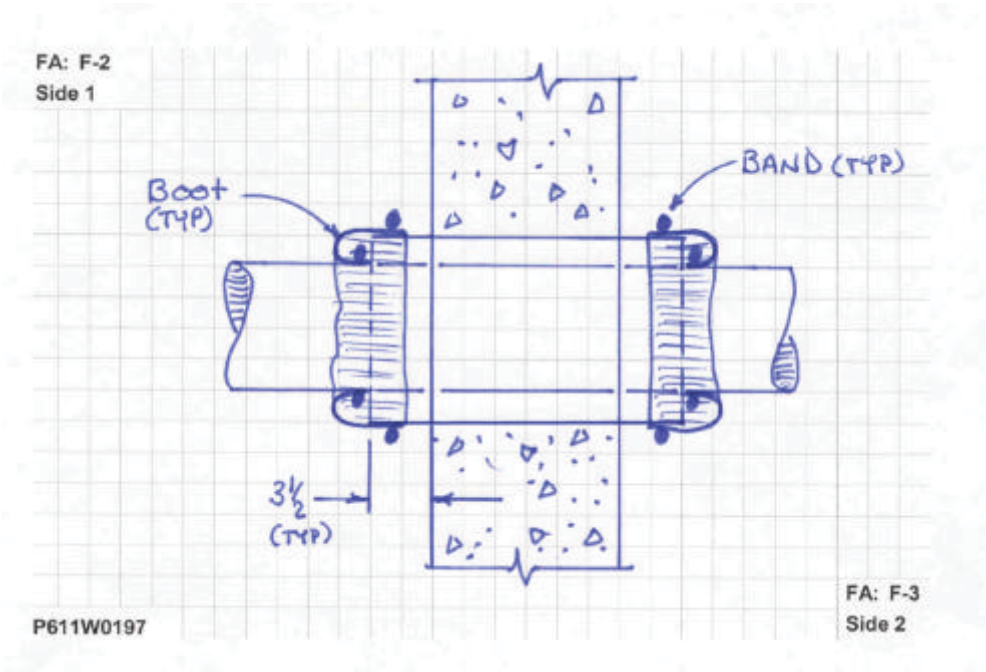

Penetration Seal Data

Appendix: B7

Photos: P611W0197

Fire Area F-2 (Side 1)

Fire Area F-2 (Side 1)

Fire Area F-3 (Side 2)

Fire Area F-3 (Side 2)

Penetration Seal Data

Appendix: B7

Heat Affected Zone Review: P611W0197

Fire Area (Side 1) F-2

1. 5U5W1G, 1-1/2" Cond.: Additional Review is required. Further review determined that this conduit is not PFSSD. Set-route control is necessary.

Fire Area (Side 2) F-3

No issues within Heat Affected Zone

Review Distances

(Reference M-663-00017A, Figure 7.2.3-1)

12" Pipe			
L1 & L2 Dist. (ft)	Temp. (°F)	R1 Radius (in)	R2 Radius (in)
0.5	1712	4.6	5.9
1	1524	3.7	5.1
1.5	1357	3	4.3
2	1209	2.3	3.6
2.5	1078	1.7	3.1
3	962	1.2	2.5
3.5	860	0.7	2.1
4	769	0.3	1.7
4.5	689	Contact	1.3
5	618		1
5.5	555		0.7
6	499		0.4
6.5	450		0.2
7	406		0
7.5	368		Contact

Side 1 Photo

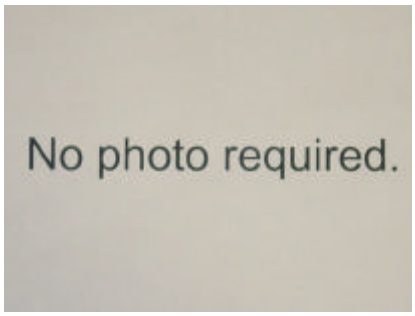

Side 2 Photo

Sketch

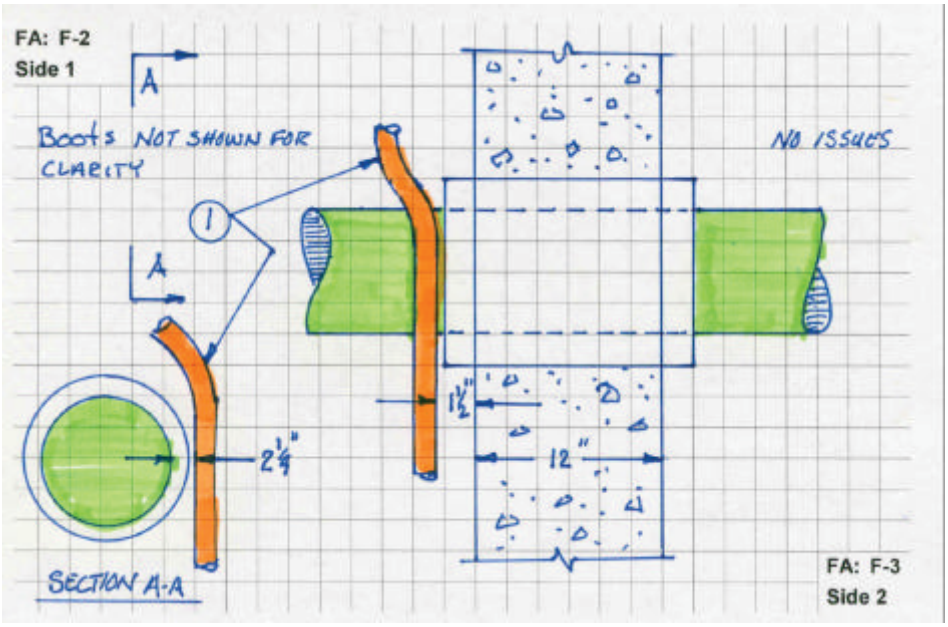

Penetration Seal Data

Appendix: B7

Penetration #: P621S0153

Penetration Type: FB-1 **Fire Area (Side 1):** F-5 **Fire Area (Side 2):** F-3

Loc./Elev.: 2026'-0" **M-0X Dwg:** M-0X6211

1. **Barrier Thickness:** 10"
2. **Opening Size:** 14"D
3. **Penetrants:** (1) 10"P
4. **Sealant Type:** Ceramic Fiber
5. **Damming Side1:** Boot
6. **Damming Side 2:** Boot
7. **Damming Continuity (Acc/Rej):** N/A
8. **Boot Condition (Acc/Rej):** Accept
9. **Sealant Depth:** Assumed Per Detail
10. **Annular Gap (smallest):** 1"
11. **Gap between pen:** N/A
12. **Barrier Type:** F W
13. **Opening Sleeved or Concrete:** Steel
14. **Pipe Insulated:** No

Wayne Aregood
Prepared By:

Jeff Suter
Reviewed By:

Walkdown Comments:

Sketch:

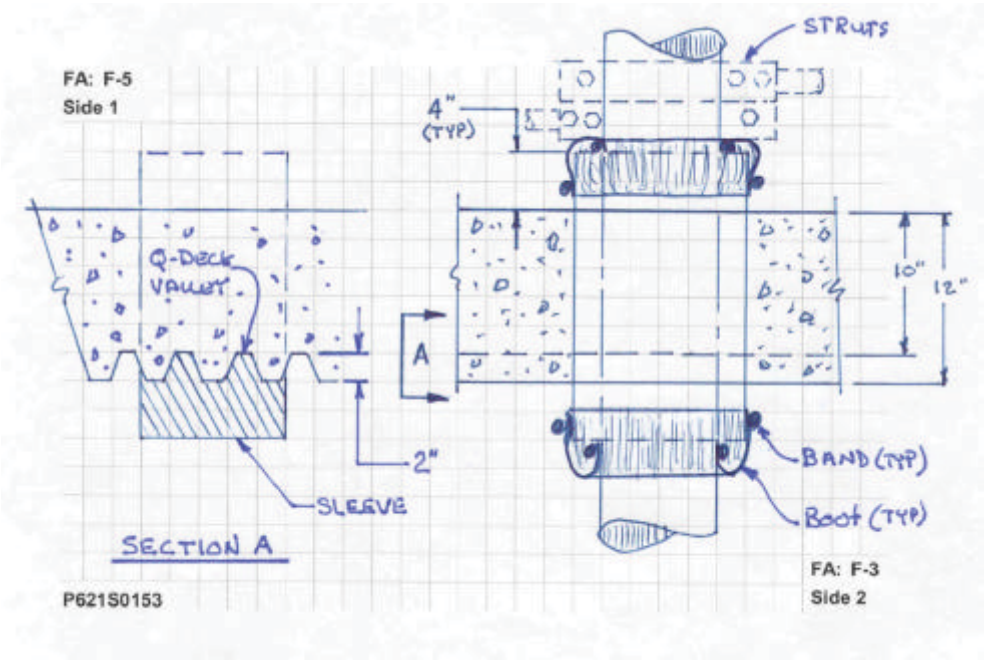

Penetration Seal Data

Appendix: B7

Photos: P621S0153

Fire Area F-5 (Side 1)

Fire Area F-5 (Side 1)

Fire Area F-3 (Side 2)

Fire Area F-3 (Side 2)

Penetration Seal Data

Appendix: B7

Heat Affected Zone Review: P621S0153

Fire Area (Side 1) F-5

No issues within Heat Affected Zone

Fire Area (Side 2) F-3

No issues within Heat Affected Zone

Review Distances

(Reference M-663-00017A, Figure 7.2.3-1)

10" Pipe			
L1 & L2 Dist. (ft)	Temp. (°F)	R1 Radius (in)	R2 Radius (in)
0.5	1697	4.5	5.8
1	1497	3.6	4.9
1.5	1321	2.8	4.1
2	1167	2.1	3.5
2.5	1032	1.5	2.8
3	914	1	2.3
3.5	810	0.5	1.8
4	719	0.1	1.4
4.5	639	Contact	1.1
5	569		0.8
5.5	508		0.5
6	454		0.2
6.5	406		0
7	365		Contact

Side 1 Photo

No photo required.

Side 2 Photo

No photo required.

Sketch

No sketch required.

Penetration Seal Data

Appendix: B7

Penetration #: P621S0156

Penetration Type: FB-1 **Fire Area (Side 1):** F-4 **Fire Area (Side 2):** F-3

Loc./Elev.: 2026'-0" **M-0X Dwg:** M-0X6211

1. **Barrier Thickness:** 10"
2. **Opening Size:** 16"D
3. **Penetrants:** (1) 12"P
4. **Sealant Type:** Ceramic Fiber
5. **Damming Side1:** Boot
6. **Damming Side 2:** Boot
7. **Damming Continuity (Acc/Rej):** N/A
8. **Boot Condition (Acc/Rej):** Accept
9. **Sealant Depth:** Assumed Per Detail
10. **Annular Gap (smallest):** 1"
11. **Gap between pen:** N/A
12. **Barrier Type:** F W
13. **Opening Sleeved or Concrete:** Steel
14. **Pipe Insulated:** No

Wayne Aregood
Prepared By:

Jeff Suter
Reviewed By:

Walkdown Comments:

Sketch:

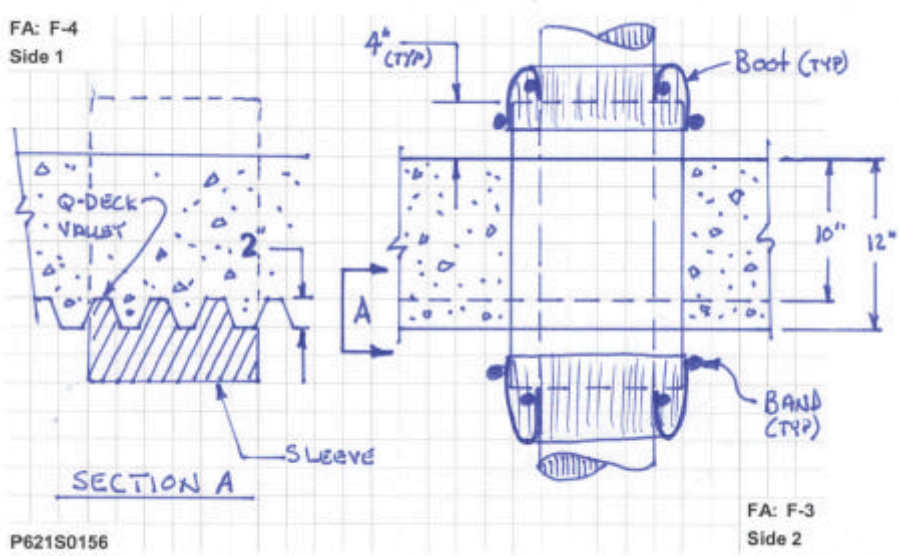

Penetration Seal Data

Appendix: B7

Photos: P621S0156

Fire Area F-4 (Side 1)

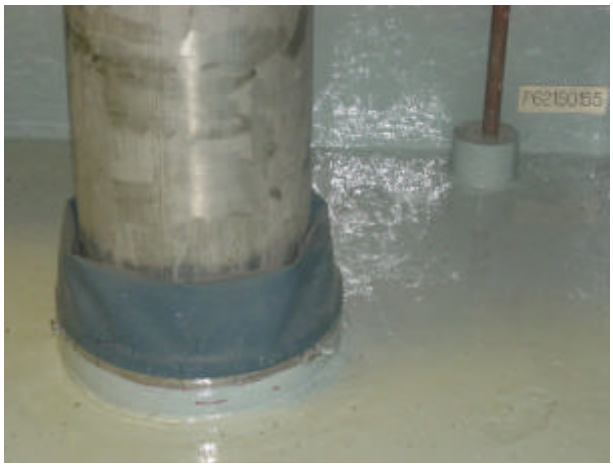

Fire Area F-4 (Side 1)

Fire Area F-3 (Side 2)

Fire Area F-3 (Side 2)

Penetration Seal Data

Appendix: B7

Heat Affected Zone Review: P621S0156

Fire Area (Side 1) F-4

No issues within Heat Affected Zone

Fire Area (Side 2) F-3

No issues within Heat Affected Zone

Review Distances

(Reference M-663-00017A, Figure 7.2.3-1)

12" Pipe			
L1 & L2 Dist. (ft)	Temp. (°F)	R1 Radius (in)	R2 Radius (in)
0.5	1712	4.6	5.9
1	1524	3.7	5.1
1.5	1357	3	4.3
2	1209	2.3	3.6
2.5	1078	1.7	3.1
3	962	1.2	2.5
3.5	860	0.7	2.1
4	769	0.3	1.7
4.5	689	Contact	1.3
5	618		1
5.5	555		0.7
6	499		0.4
6.5	450		0.2
7	406		0
7.5	368		Contact

Side 1 Photo

No photo required.

Side 2 Photo

No photo required.

Sketch

No sketch required.

Penetration Seal Data

Appendix: B7

Penetration #: P621S0157

Penetration Type: FB-1 **Fire Area (Side 1):** F-4 **Fire Area (Side 2):** F-2

Loc./Elev.: 2026'-0" **M-0X Dwg:** M-0X6211

1. **Barrier Thickness:** 10"
2. **Opening Size:** 16"D
3. **Penetrants:** (1) 12"P
4. **Sealant Type:** Ceramic Fiber
5. **Damming Side1:** Boot
6. **Damming Side 2:** Boot
7. **Damming Continuity (Acc/Rej):** N/A
8. **Boot Condition (Acc/Rej):** Accept
9. **Sealant Depth:** Assumed Per Detail
10. **Annular Gap (smallest):** 1/4"
11. **Gap between pen:** N/A
12. **Barrier Type:** F W
13. **Opening Sleeved or Concrete:** Steel
14. **Pipe Insulated:** No

Wayne Aregood
Prepared By:

Jeff Suter
Reviewed By:

Walkdown Comments:
Slab thickness (12") determined by C-1C6211.

Sketch:

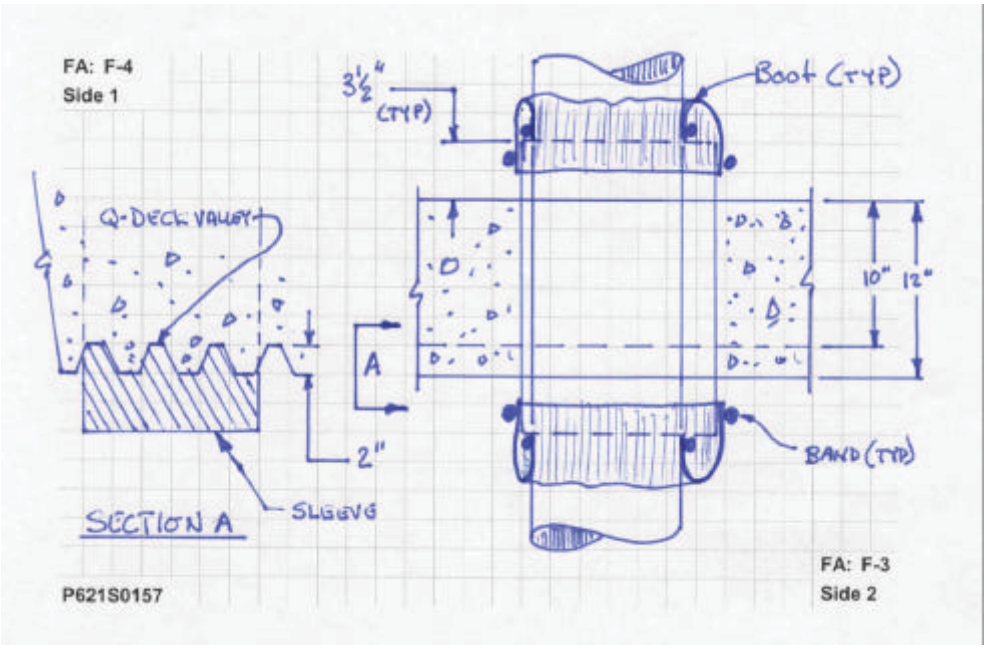

Penetration Seal Data

Appendix: B7

Photos: P621S0157

Fire Area F-4 (Side 1)

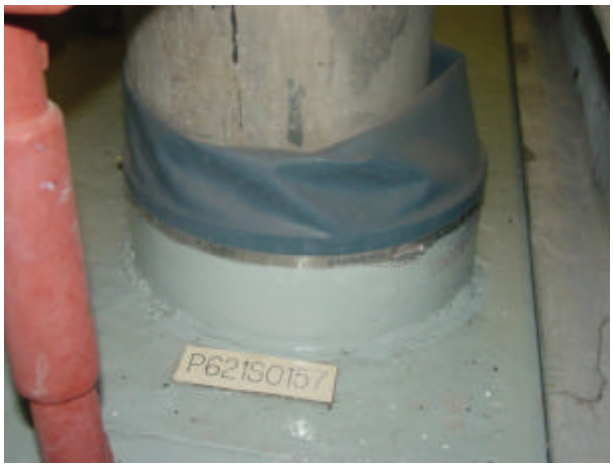

Fire Area F-4 (Side 1)

Fire Area F-2 (Side 2)

Fire Area F-2 (Side 2)

Penetration Seal Data

Appendix: B7

Heat Affected Zone Review: P621S0157

Fire Area (Side 1) F-4

No issues within Heat Affected Zone

Fire Area (Side 2) F-2

1. 1/2" unscheduled Cond.: Not within Heat Affected Zone.

Review Distances

(Reference M-663-00017A, Figure 7.2.3-1)

12" Pipe			
L1 & L2 Dist. (ft)	Temp. (°F)	R1 Radius (in)	R2 Radius (in)
0.5	1712	4.6	5.9
1	1524	3.7	5.1
1.5	1357	3	4.3
2	1209	2.3	3.6
2.5	1078	1.7	3.1
3	962	1.2	2.5
3.5	860	0.7	2.1
4	769	0.3	1.7
4.5	689	Contact	1.3
5	618		1
5.5	555		0.7
6	499		0.4
6.5	450		0.2
7	406		0
7.5	368		Contact

Side 1 Photo

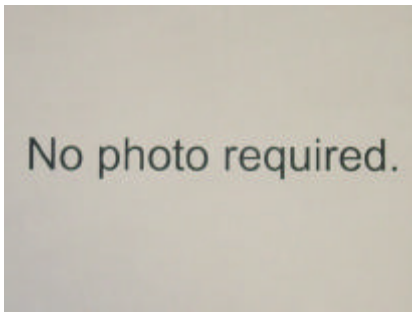

Side 2 Photo

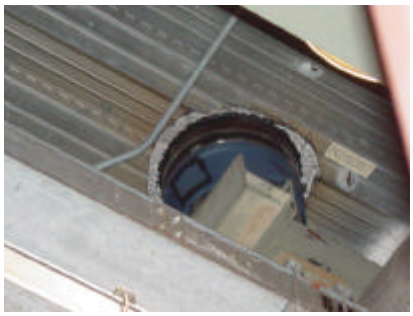

Sketch

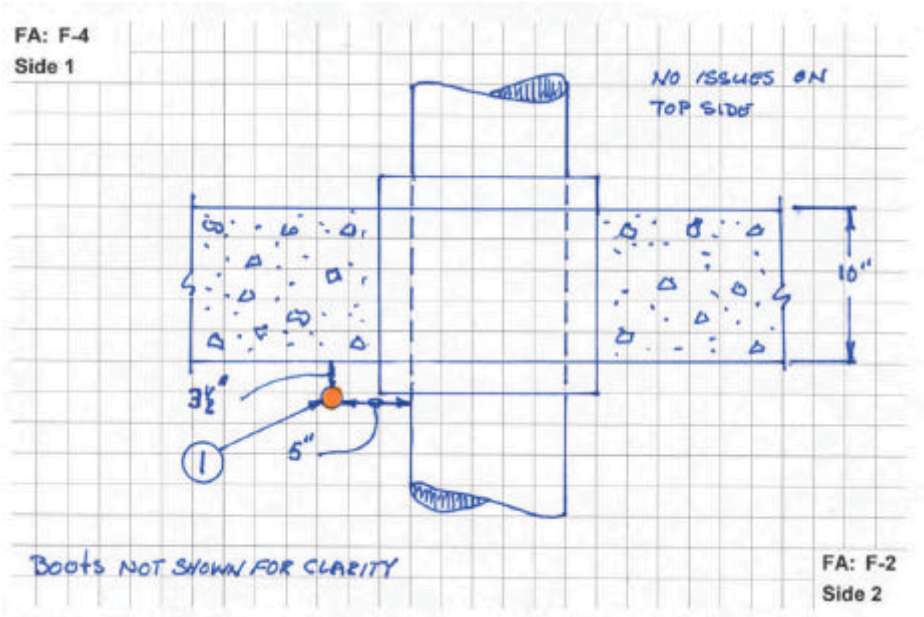

Penetration Seal Data

Appendix: B7

Penetration #: P621S0162

Penetration Type: FB-1 **Fire Area (Side 1):** F-4 **Fire Area (Side 2):** F-2

Loc./Elev.: 2026'-0" **M-0X Dwg:** M-0X6211

1. **Barrier Thickness:** 10"
2. **Opening Size:** 16"D
3. **Penetrants:** (1) 12"P
4. **Sealant Type:** Ceramic Fiber
5. **Damming Side1:** Boot
6. **Damming Side 2:** Boot
7. **Damming Continuity (Acc/Rej):** N/A
8. **Boot Condition (Acc/Rej):** Accept
9. **Sealant Depth:** Assumed Per Detail
10. **Annular Gap (smallest):** 1-1/4"
11. **Gap between pen:** N/A
12. **Barrier Type:** F W
13. **Opening Sleeved or Concrete:** Steel
14. **Pipe Insulated:** No

Wayne Aregood
Prepared By:

Jeff Suter
Reviewed By:

Walkdown Comments:

Sketch:

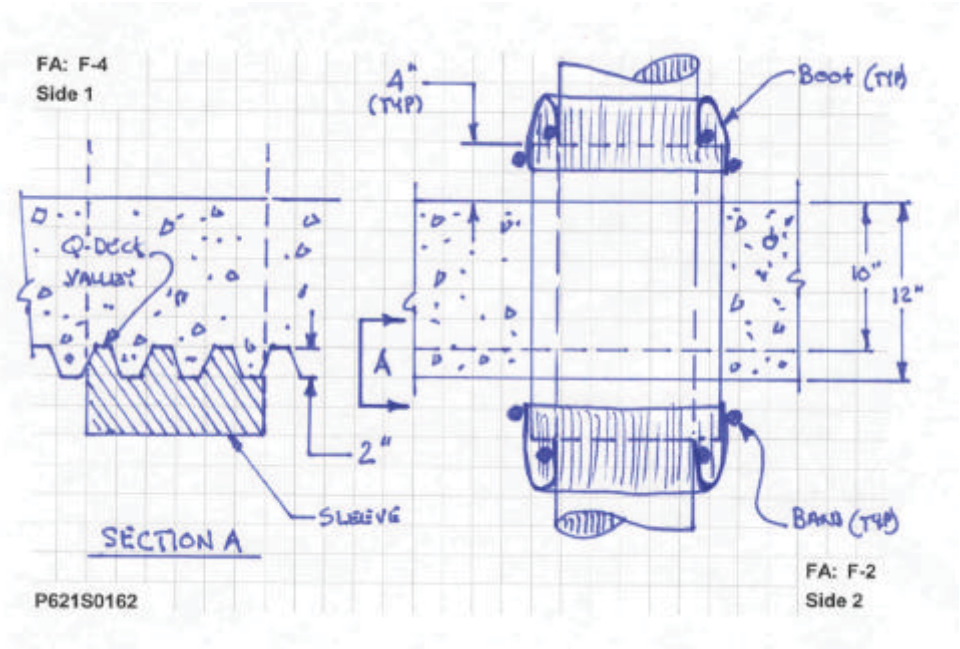

Penetration Seal Data

Appendix: B7

Photos: P621S0162

Fire Area F-4 (Side 1)

Fire Area F-4 (Side 1)

Fire Area F-2 (Side 2)

Fire Area F-2 (Side 2)

Penetration Seal Data

Appendix: B7

Heat Affected Zone Review: P621S0162

Fire Area (Side 1) F-4

No issues within Heat Affected Zone

Fire Area (Side 2) F-2

1. 4U603O, 2" Cond.: Not within Heat Affected Zone

Review Distances

(Reference M-663-00017A, Figure 7.2.3-1)

12" Pipe			
L1 & L2 Dist. (ft)	Temp. (°F)	R1 Radius (in)	R2 Radius (in)
0.5	1712	4.6	5.9
1	1524	3.7	5.1
1.5	1357	3	4.3
2	1209	2.3	3.6
2.5	1078	1.7	3.1
3	962	1.2	2.5
3.5	860	0.7	2.1
4	769	0.3	1.7
4.5	689	Contact	1.3
5	618		1
5.5	555		0.7
6	499		0.4
6.5	450		0.2
7	406		0
7.5	368		Contact

Side 1 Photo

No photo required.

Side 2 Photo

No photo required.

Sketch

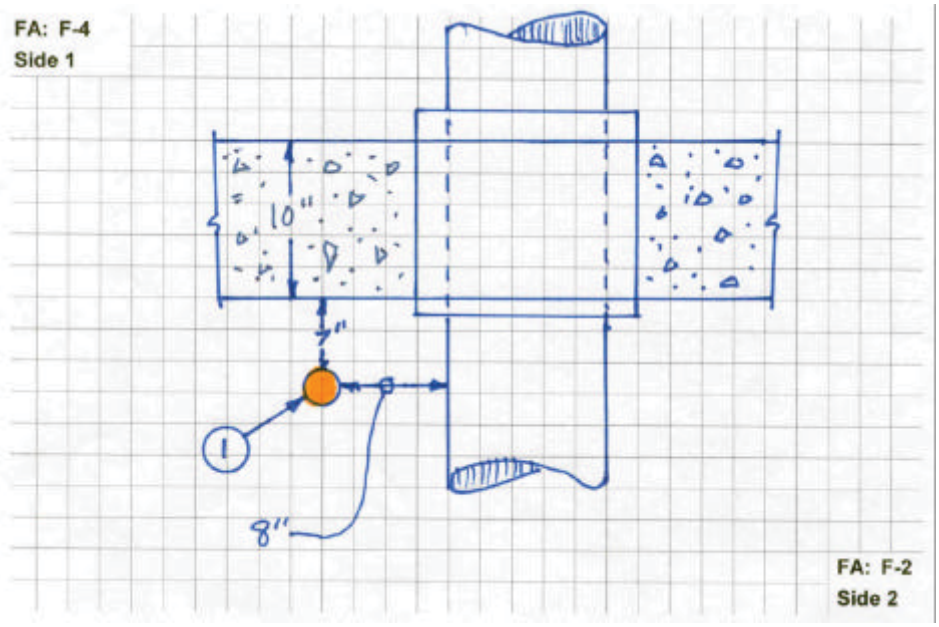

Penetration Seal Data

Appendix: B7

Penetration #: P621W0009

Penetration Type: FB-1 **Fire Area (Side 1):** F-4 **Fire Area (Side 2):** F-5

Loc./Elev.: 2041'-6" **M-0X Dwg:** M-0X6908

1. **Barrier Thickness:** 12"
2. **Opening Size:** 16"D
3. **Penetrants:** (1) 12"P
4. **Sealant Type:** Ceramic Fiber
5. **Damming Side1:** Boot
6. **Damming Side 2:** Boot
7. **Damming Continuity (Acc/Rej):** N/A
8. **Boot Condition (Acc/Rej):** Accept
9. **Sealant Depth:** Assumed Per Detail
10. **Annular Gap (smallest):** 3/4"
11. **Gap between pen:** N/A
12. **Barrier Type:** F
13. **Opening Sleeved or Concrete:** Steel
14. **Pipe Insulated:** No

Wayne Aregood
Prepared By:

Jeff Suter
Reviewed By:

Walkdown Comments:
Wall thickness (12") determined by C-1C6211.

Sketch:

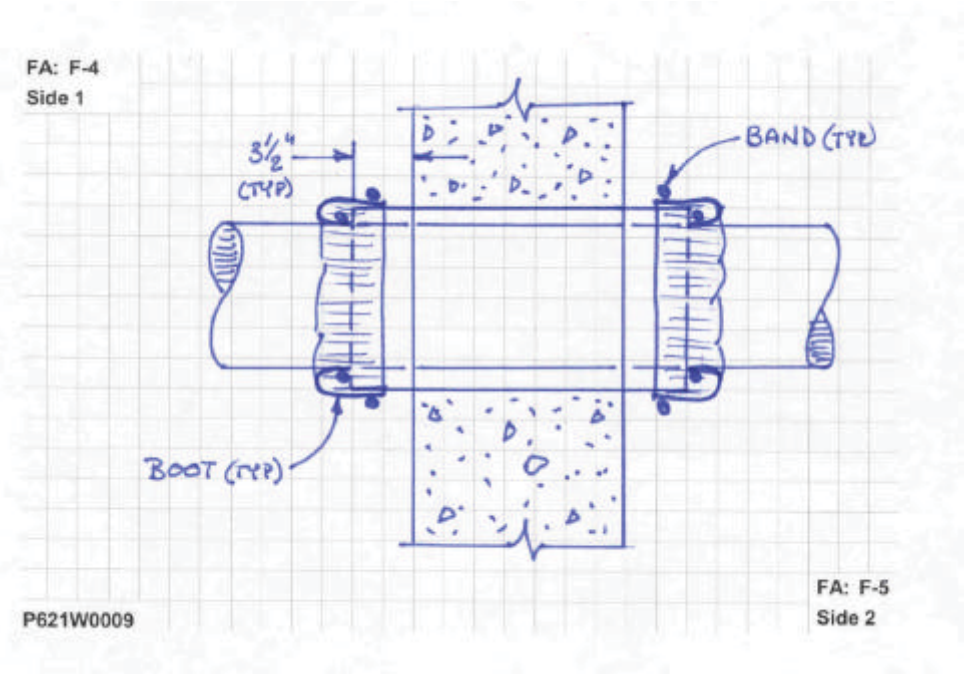

Penetration Seal Data

Appendix: B7

Photos: P621W0009

Fire Area F-4 (Side 1)

Fire Area F-4 (Side 1)

Fire Area F-5 (Side 2)

Fire Area F-5 (Side 2)

Penetration Seal Data

Appendix: B7

Heat Affected Zone Review: P621W0009

Fire Area (Side 1) F-4

No issues within Heat Affected Zone

Fire Area (Side 2) F-5

1. 3/4" unscheduled Cond.: Not within Heat Affected Zone.

Review Distances

(Reference M-663-00017A, Figure 7.2.3-1)

12" Pipe			
L1 & L2 Dist. (ft)	Temp. (°F)	R1 Radius (in)	R2 Radius (in)
0.5	1712	4.6	5.9
1	1524	3.7	5.1
1.5	1357	3	4.3
2	1209	2.3	3.6
2.5	1078	1.7	3.1
3	962	1.2	2.5
3.5	860	0.7	2.1
4	769	0.3	1.7
4.5	689	Contact	1.3
5	618		1
5.5	555		0.7
6	499		0.4
6.5	450		0.2
7	406		0
7.5	368		Contact

Side 1 Photo

No photo required.

Side 2 Photo

No photo required.

Sketch

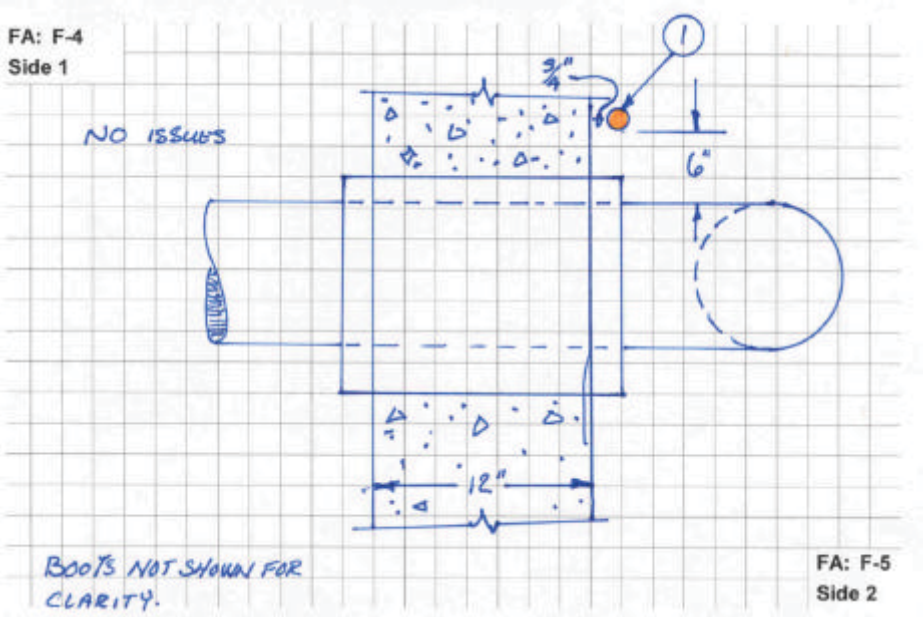

Penetration Seal Data

Appendix: B7

Penetration #: P621W0017

Penetration Type: FB-1 **Fire Area (Side 1):** F-5 **Fire Area (Side 2):** F-4

Loc./Elev.: 2041'-6" **M-0X Dwg:** M-0X6908

1. **Barrier Thickness:** 12"
2. **Opening Size:** 16"D
3. **Penetrants:** (1) 12"P
4. **Sealant Type:** Ceramic Fiber
5. **Damming Side1:** Boot
6. **Damming Side 2:** Boot
7. **Damming Continuity (Acc/Rej):** N/A
8. **Boot Condition (Acc/Rej):** Accept
9. **Sealant Depth:** Assumed per detail
10. **Annular Gap (smallest):** 1-1/2"
11. **Gap between pen:** N/A
12. **Barrier Type:** F
13. **Opening Sleeved or Concrete:** Steel
14. **Pipe Insulated:** No

Wayne Aregood
Prepared By:

Jeff Suter
Reviewed By:

Walkdown Comments:
Wall thickness (12") determined by C-1C6211.

Sketch:

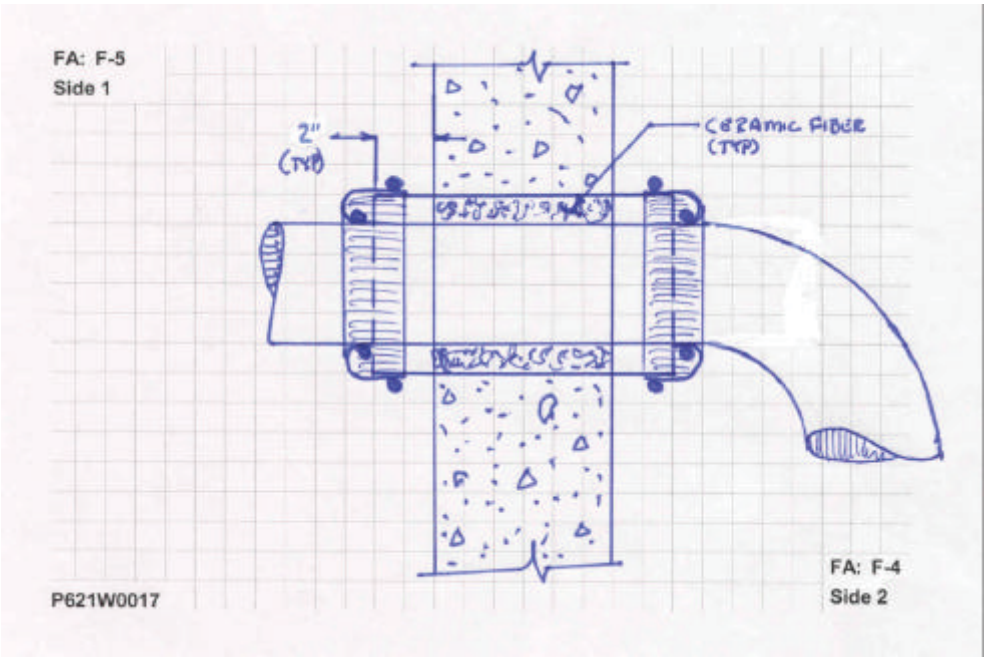

Penetration Seal Data

Appendix: B7

Photos: P621W0017

Fire Area F-5 (Side 1)

Fire Area F-5 (Side 1)

Fire Area F-4 (Side 2)

Fire Area F-4 (Side 2)

Penetration Seal Data

Appendix: B7

Heat Affected Zone Review: P621W0017

Fire Area (Side 1) F-5

1. 1/2" unscheduled Cond.: Not within Heat Affected Zone

Fire Area (Side 2) F-4

2. 5U5P1J, 1-1/2" Cond.: Not within Heat Affected Zone
3. 6U5Z1B, 2" Cond.: Not within Heat Affected Zone.

Review Distances

(Reference M-663-00017A, Figure 7.2.3-1)

12" Pipe			
L1 & L2 Dist. (ft)	Temp. (°F)	R1 Radius (in)	R2 Radius (in)
0.5	1712	4.6	5.9
1	1524	3.7	5.1
1.5	1357	3	4.3
2	1209	2.3	3.6
2.5	1078	1.7	3.1
3	962	1.2	2.5
3.5	860	0.7	2.1
4	769	0.3	1.7
4.5	689	Contact	1.3
5	618		1
5.5	555		0.7
6	499		0.4
6.5	450		0.2
7	406		0
7.5	368		Contact

Side 1 Photo

No photo required.

Side 2 Photo

Sketch

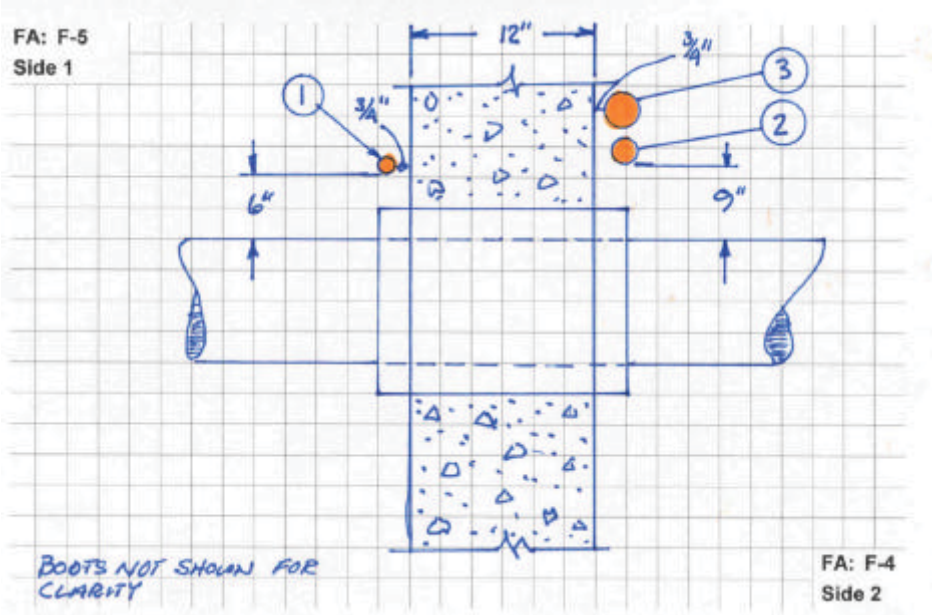

Penetration Seal Data

Appendix: B7

Penetration #: P621W0221

Penetration Type: FB-1 **Fire Area (Side 1):** A-5 **Fire Area (Side 2):** F-4

Loc./Elev.: 2043'-0" **M-0X Dwg:** M-0X6901

1. **Barrier Thickness:** * 48"
2. **Opening Size:** 18"D
3. **Penetrants:** (1) 12"P
4. **Sealant Type:** Ceramic Fiber
5. **Damming Side1:** Boot
6. **Damming Side 2:** Boot
7. **Damming Continuity (Acc/Rej):** N/A
8. **Boot Condition (Acc/Rej):** Accept
9. **Sealant Depth:** 48" *
10. **Annular Gap (smallest):** 2"
11. **Gap between pen:** N/A
12. **Barrier Type:** A F
13. **Opening Sleeved or Concrete:** Steel
14. **Pipe Insulated:** No

Wayne Aregood
Prepared By:

Jeff Suter
Reviewed By:

Walkdown Comments:

* This wall is located on the west side of the Fuel Bldg and interfaces with the Aux Bldg. Each building is independent with a seismic gap between them, resulting in a 48" wall thickness. The corresponding Aux Bldg Pen. No. is P143W1489. Queried (LB) QC that was involved with this seal during construction. QC indicated this seal is full depth ceramic fiber and is a separate seal from P143W1489.

Sketch:

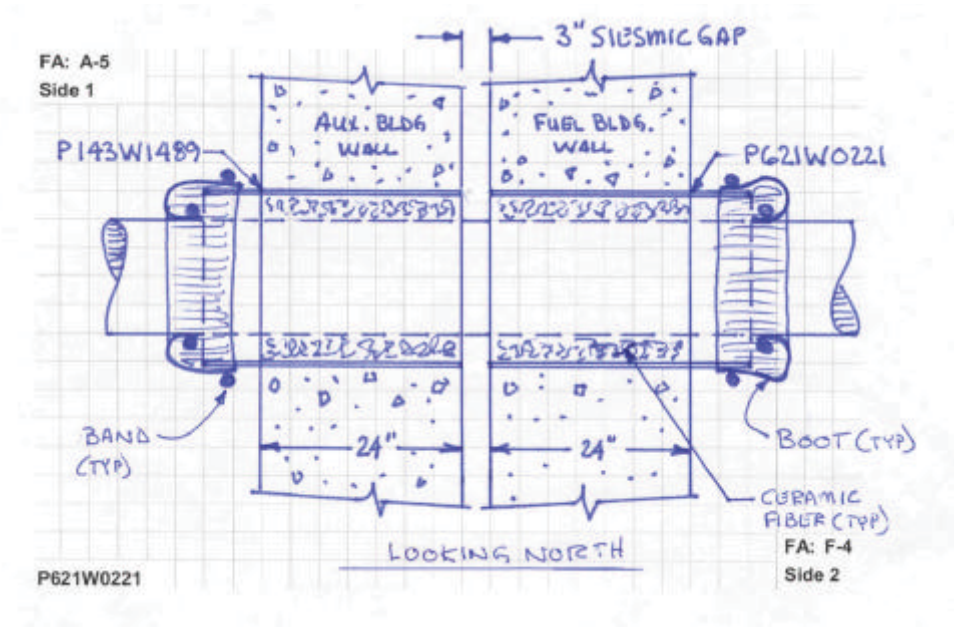

Penetration Seal Data

Appendix: B7

Photos: P621W0221

Fire Area A-5 (Side 1)

Fire Area A-5 (Side 1)

Fire Area F-4 (Side 2)

Fire Area F-4 (Side 2)

Penetration Seal Data

Appendix: B7

Heat Affected Zone Review: P621W0221

Fire Area (Side 1) A-5

See P621W1489 for Details, No issues within Heat Affected Zone.

Fire Area (Side 2) F-4

1. 1/2" Unscheduled Cond. (Pull Station): No within Heat Affected Zone.
2. 5U5P01, 24" Cable Tray, Not within Heat Affected Zone

Review Distances

(Reference M-663-00017A, Figure 7.2.3-1)

12" Pipe			
L1 & L2 Dist. (ft)	Temp. (°F)	R1 Radius (in)	R2 Radius (in)
0.5	1712	4.6	5.9
1	1524	3.7	5.1
1.5	1357	3	4.3
2	1209	2.3	3.6
2.5	1078	1.7	3.1
3	962	1.2	2.5
3.5	860	0.7	2.1
4	769	0.3	1.7
4.5	689	Contact	1.3
5	618		1
5.5	555		0.7
6	499		0.4
6.5	450		0.2
7	406		0
7.5	368		Contact

Side 1 Photo

No photo required.

Side 2 Photo

No photo required.

Sketch

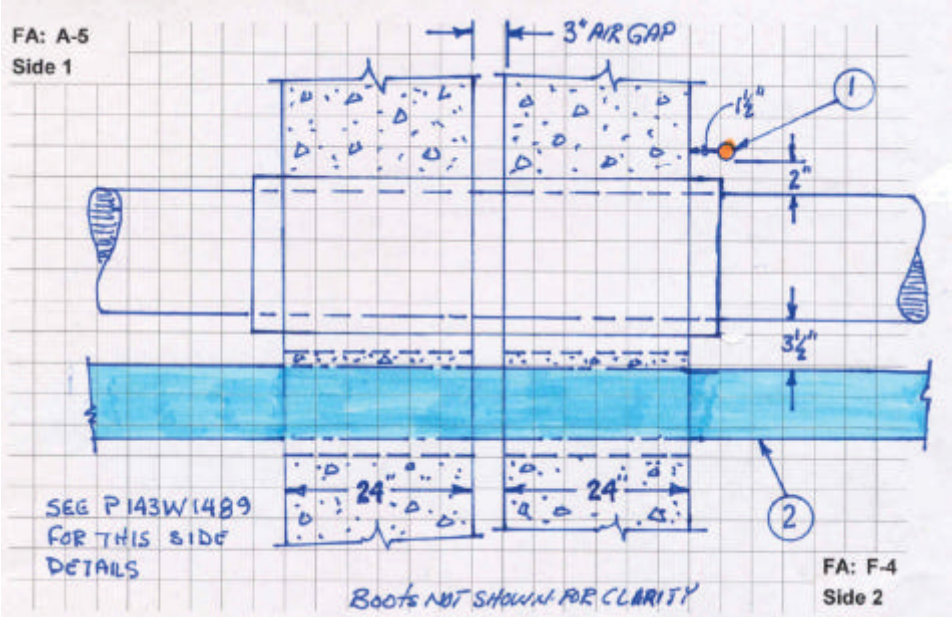

Penetration Seal Data

Appendix: B7

Penetration #: P621W0224

Penetration Type: FB-1 **Fire Area (Side 1):** A-5 **Fire Area (Side 2):** F-4

Loc./Elev.: 2043'-0" **M-0X Dwg:** M-0X6901

1. **Barrier Thickness:** 48" *
2. **Opening Size:** 18"D
3. **Penetrants:** (1) 12"P
4. **Sealant Type:** Ceramic Fiber
5. **Damming Side1:** Boot
6. **Damming Side 2:** Boot
7. **Damming Continuity (Acc/Rej):** N/A
8. **Boot Condition (Acc/Rej):** Accept
9. **Sealant Depth:** 48" *
10. **Annular Gap (smallest):** 2-1/2"
11. **Gap between pen:** N/A
12. **Barrier Type:** A F
13. **Opening Sleeved or Concrete:** Steel
14. **Pipe Insulated:** No

Wayne Aregood
Prepared By:

Jeff Suter
Reviewed By:

Walkdown Comments:

* This wall is located on the west side of the Fuel Bldg and interfaces with the Aux Bldg. Each building is independent with a seismic gap between them, resulting in a 48" wall thickness. The corresponding Aux Bldg Pen. No. is P143W1488. Queried (LB) QC that was involved with this seal during construction. QC indicated this seal is full depth ceramic fiber and is a separate seal from P143W1488.

Sketch:

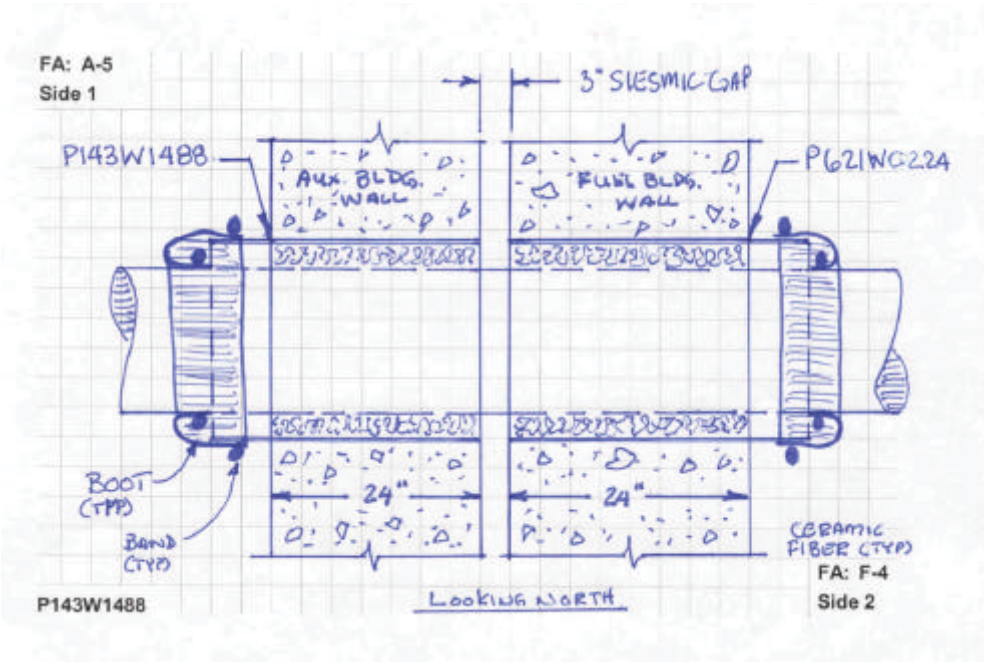

Penetration Seal Data

Appendix: B7

Photos: P621W0224

Fire Area A-5 (Side 1)

Fire Area A-5 (Side 1)

Fire Area F-4 (Side 2)

Fire Area F-4 (Side 2)

Penetration Seal Data

Appendix: B7

Heat Affected Zone Review: P621W0224

Fire Area (Side 1) A-5

1. 5U5A96, 24" Cable Tray, Not within Heat Affected Zone.

Fire Area (Side 2) F-4

2. 5U5PO1, 24" Cable Tray, Not within Heat Affected Zone
3. 1/2" Unscheduled Cond. (Pull Station), Not within Heat Affected Zone

Review Distances

(Reference M-663-00017A, Figure 7.2.3-1)

12" Pipe			
L1 & L2 Dist. (ft)	Temp. (°F)	R1 Radius (in)	R2 Radius (in)
0.5	1712	4.6	5.9
1	1524	3.7	5.1
1.5	1357	3	4.3
2	1209	2.3	3.6
2.5	1078	1.7	3.1
3	962	1.2	2.5
3.5	860	0.7	2.1
4	769	0.3	1.7
4.5	689	Contact	1.3
5	618		1
5.5	555		0.7
6	499		0.4
6.5	450		0.2
7	406		0
7.5	368		Contact

Side 1 Photo

No photo required.

Side 2 Photo

No photo required.

Sketch

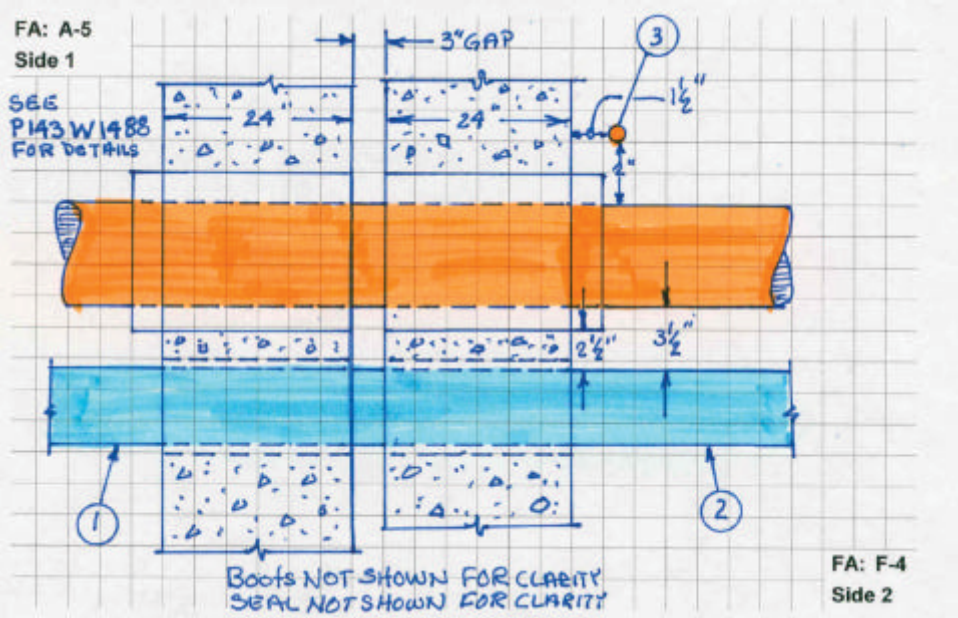

WOLF CREEK
NUCLEAR OPERATING CORPORATION

M-663-00017A

Attachment B8

Fire Protection Evaluation For Penetrant Size Exceeding Typical Detail RB-5A Limitation

Rev. No.	Prepared By	Date	Reviewed By	Date
W01	Jeff Suter	08/19/05	Wayne S Aregood	08/19/05

Table of Contents

Revision Log 3

1.0 Purpose..... 4

2.0 Scope 4

3.0 References..... 4

4.0 Evaluation 5

5.0 Conclusions..... 8

Appendix B8, Penetration Seal Data ……. (180 Total Pages)

Revision Log

Revision	Reason for Revision
W01	Original Issue

1.0 Purpose

1.1 The purpose of this document is to evaluate existing penetration seals that are not directly bounded to the typical detail limitations established in M-663-00017. This evaluation was conducted in effort to satisfy regulatory expectation regarding qualification and documentation of fire barrier penetration seals, as discussed in NRC Information Notice 88-04. This evaluation was conducted in accordance with the guidance of NRC Generic Letter 86-10.

2.0 Scope

2.1 The Table I penetrations in relation to the design requirements discussed in Section 5.1.

2.2 Refer to Section 7.0 of M-663-00017A for a cross-reference list of penetrations within Table I that are evaluated for additional seal parameters that do not satisfy the typical detail limitations of M-663-00017. In these instances, the potential cumulative affects of multiple unbounded attributes were considered for each penetration of concern.

3.0 References

3.1 NRC Generic Letter 86-10, Implementation of Fire Protection Requirements, dated April 24, 1986

3.2 NRC Information Notice 88-04, Inadequate Qualification and Documentation of Fire Barrier Penetration Seals

3.3 10 CFR 50 Appendix R, Fire Protection Program For Nuclear Power Facilities Operating Prior To January 1, 1979

3.4 LER 87-10, Technical Specification Violations – Inoperable Fire Barriers Caused By Personnel Errors

3.5 M-663-00017, Penetration Seal Typical Details, Rev. W20

3.6 CTP-1022 (M-663-00121), Fire Qualification Test on Penetration Seals

4.0 Assumptions

4.1 It is assumed that existing penetration seal materials have been installed as required by applicable typical design details and procedures. This is an acceptable assumption based on a review of the Quality Control documentation maintained during initial penetration seal installation activities and the intrusive inspections conducted to address LER 87-10, regarding seal material depth.

5.0 Evaluation

5.1 Assessment of Condition to Design Requirements

The penetration openings identified in Table I contain a pipe penetrant that exceeds the size limitation directly bounded by typical detail RB-5A from M-663-00017. Figure 1 depicts detail RB-5A, which is an annular reduction seal. The primary opening is sealed with full barrier depth HDSE/HDLE, leaving a small annular gap (1" maximum) between the penetrant and HDSE/HDLE to accommodate penetrant movement. The gap is sealed on both barrier sides with a minimum 3" depth of ceramic fiber within a silicone impregnated fiberglass boot. Typical detail RB-5A directly qualifies a seal with up to a 2" diameter penetrant as 3-hour F and T rated.

The HDSE/HDLE annular reduction seals for the Table I penetrations are bounded by the limitations of typical detail RM-1A, which allows up to an 18" pipe penetrant for an HDSE/HDLE seal. The unbounded portion necessitating evaluation is the penetrant size in relation to the annular gap sealed with ceramic fiber and a silicone impregnated boot.

TABLE I

Penetrations with Penetrant Size Exceeding Detail RB-5A Limitations

Penetration Number	Communicating Fire Areas		Pipe Penetrant Diameter	Comments/ Disposition
	Side 1	Side 2		
P111W1584	A-1	A-4	2-1/2"	See 5.2
P121S0257	A-1	A-4	8"	See 5.2
P121S0258	A-1	A-4	8"	See 5.2
P121S0263	A-1	A-4	6"	See 5.2
P121S0266	A-1	A-4	4"	See 5.2
P121S0267	A-1	A-4	4"	See 5.2
P121S0268	A-1	A-4	6"	See 5.2
P121S0273	A-1	A-4	6"	See 5.2
P121S0274	A-1	A-4	6"	See 5.2
P121S0275	A-1	A-4	10"	See 5.2
P121S0279	A-1	A-4	12"	See 5.2
P121S0280	A-1	A-4	4"	See 5.2
P121S0281	A-1	A-4	8"	See 5.2
P121S0283	A-1	A-4	4"	See 5.2
P121W1781	A-1	RW-1	6"	See 5.2
P121W1782	A-1	RW-1	3"	See 5.2
P122S0327	A-1	A-2	10"	See 5.2
P122S0331	A-1	A-2	3"	See 5.2
P122S0338	A-1	A-2	4"	See 5.2
P122S0339	A-1	A-2	14"	See 5.2
P122S0340	A-1	A-2	14"	See 5.2
P122S0349	A-1	A-2	12"	See 5.2
P122S0350	A-1	A-2	4"	See 5.2
P122S0351	A-1	A-2	4"	See 5.2
P122S0357	A-1	A-2	8"	See 5.2

Penetration Number	Communicating Fire Areas		Pipe Penetrant Diameter	Comments/ Disposition
	Side 1	Side 2		
P122S0367	A-1	A-2	8”	See 5.2
P122S0373	A-1	A-2	4”	See 5.2
P131S0513	A-8	A-1	3”	See 5.2
P131S0522	A-8	A-1	3”	See 5.2
P131S0525	A-8	A-1	3”	See 5.2
P131S0526	A-9	A-1	10”	See 5.2
P131S0529	A-9	A-1	10”	See 5.2
P131S0530	A-9	A-1	10”	See 5.2
P131S0531	A-9	A-1	8”	See 5.2
P132S0697	A-10	A-1	8”	See 5.2
P132S0698	A-10	A-1	10”	See 5.2
P132S0699	A-8	A-1	(1) 3”, (1) 3/4”	See 5.2
P132S0700	A-8	A-1	(1) 3”, (1) 3/4”	See 5.2
P132S0704	A-8	A-1	6”	See 5.2
P132S0710	A-8	A-1	3”	See 5.2
P132S0713	A-8	A-1	3”	See 5.2
P132S0722	A-8	A-1	3”	See 5.2
P132S0723	A-8	A-1	4”	See 5.2
P133S0769	A-25	A-1	6”	See 5.2
P133S0771	A-25	A-1	6”	See 5.2
P133S0793	A-25	A-1	4”	See 5.2
P133S0800	A-25	A-1	4”	See 5.2
P133S0801	A-25	A-1	4”	See 5.2
P133S0802	A-25	A-1	6”	See 5.2
P133S0810	A-25	A-1	10”	See 5.2
P133S0820	A-25	A-1	10”	See 5.2
P134S0864	A-24	A-1	4”	See 5.2
P134S0865	A-24	A-1	4”	See 5.2
P134S0875	A-24	A-1	10”	See 5.2
P134S0911	A-24	A-1	4”	See 5.2
P134S0912	A-24	A-1	4”	See 5.2
P134S0918	A-24	A-1	4”	See 5.2
P134S0919	A-24	A-1	4”	See 5.2
P141W1854	A-8	A-9	18”	See 5.2
P141W1980	A-16	A-9	18”	See 5.2

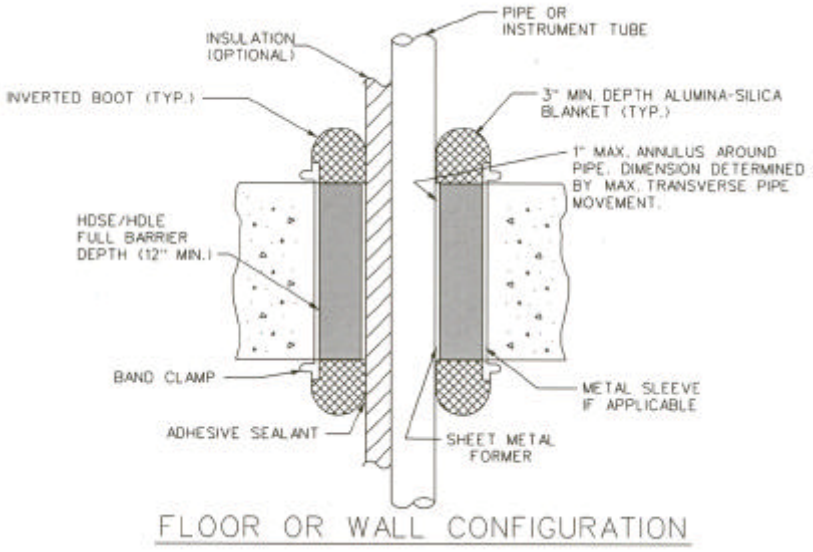

Figure 1, Typical Detail RB-5A
(Reference M-663-00017)

5.2 Evaluation of Condition

The Table I penetrations are considered 3-hour F rated based on the successful performance of Penetration 1 from fire test CTP-1022. The tested configuration was comprised of a 10" opening containing a 2" diameter pipe penetrant. The opening was sealed with a 12" depth of HDLE leaving a 1" annulus around the pipe penetrant. Silicone impregnated boots filled with a 3" ceramic fiber depth were then installed beyond the barrier plane on both penetration sides. This presented a seal configuration consistent with Figure 1 above.

Industry fire testing reveals that the exposed side boot is sacrificial and will be consumed when directly subjected to an ASTM E-119 fire. The loss of this boot will result in the loss of the exposed side ceramic fiber due to gravity, since the only structural support provided for the material beyond the barrier plane is that presented by the boot. However, the unexposed side boot with ceramic fiber fill will remain in tact, and adequately prevent fire propagation via the small annular gap between the pipe penetrant and the HDSE/HDLE sidewall. This ceramic fiber and boot configuration will not be charred or consumed during the fire exposure. The ceramic fiber will be maintained in position by the unexposed side boot, which is not determinately impacted, because it is not subjected to direct flame impingement.

Considering the performance of Penetration 1 from CTP-1022 and the and the non-ablative material properties of ceramic fiber, penetrant size will not impact seal F rating. However, a T rating for penetrants larger than 2" diameter is not directly bounded by fire testing.

M-663-00017 identifies that where piping penetrations exist that do not satisfy T rating requirements, a seal assembly with an F rating corresponding to the hourly rating of the associated barrier is acceptable, provided evaluation demonstrates

that exposed insitu combustibles and redundant post fire safe shutdown (PFSSD) equipment/circuits on the unexposed barrier side will not be detrimentally affected by the increased penetrant temperatures.

In effort to evaluate fire area impact, field walkdowns and comprehensive assessment reviews, documented in Appendix B8, were conducted for each penetration of concern. This review was completed in accordance with the criteria and review methodology established in M-663-00017A Section 7.2.3 for non-T rated penetrations.

The review identified that no exposed insitu combustibles or PFSSD circuits are located within the heat affected zone. Each of the penetrations satisfies the review criteria of M-663-00017 where T rating requirements are not met. Therefore, the penetrations are acceptable, as this evaluation demonstrates reasonable assurance that the penetration seals do not present a negative impact to PFSSD capability.

5.3 Post Fire Safe Shutdown Impact

There is no impact to PFSSD systems or components as a result of this evaluation. The Table I penetrations are 3-hour F rated. The comprehensive walkdown review for each of these penetrations revealed that no exposed insitu combustibles or PFSSD circuits are negatively affected by the non T rated penetrations.

6.0 Conclusions

Based on the above discussions, it is reasonable to conclude that the Table I penetration seals are acceptable as 3-hour F rated and will perform their intended function, regardless of not achieving a T rating. The penetration seals satisfy regulatory requirements and commitments as well as WCNOC Fire Protection Program requirements, to prevent spread of fire from one fire area to another. It has also been determined through this evaluation that the lack of a T rating will not affect the plant's ability to achieve and maintain PFSSD.

Penetration Seal Data

Appendix: B8

Penetration #: P111W1584

Penetration Type: RB-5A **Fire Area (Side 1):** A-1 **Fire Area (Side 2):** A-4

Loc./Elev.: 1981'-0" **M-0X Dwg:** M-1X1910

1. **Barrier Thickness:** 24"
2. **Opening Size:** 8"D
3. **Penetrants:** (1) 2-1/2"P
4. **Sealant Type:** HDSE/HDLE, Ceramic Fiber
5. **Damming Side1:** Boot filled w/ceramic fiber
6. **Damming Side 2:** Not inspected
7. **Damming Continuity (Acc/Rej):** N/A
8. **Boot Condition (Acc/Rej):** Accept
9. **Sealant Depth:** 29" **
10. **Annular Gap (smallest):** 2"
11. **Gap between pen:** N/A
12. **Barrier Type:** F R W
13. **Opening Sleeved or Concrete:** Steel
14. **Pipe Insulated:** No

Wayne Aregood
Prepared By:

Jeff Suter
Reviewed By:

Walkdown Comments:

1). Physical manipulation of boot material confirmed boot is filled w/ceramic fiber. ** Sealant depth determined by installation inspection report.

Sketch:

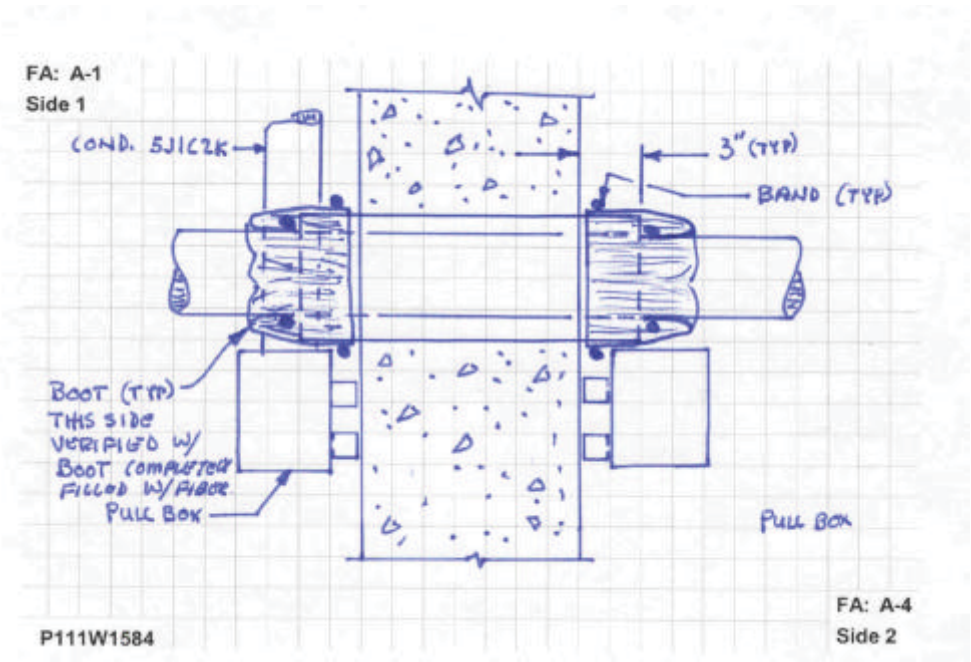

Penetration Seal Data

Appendix: B8

Photos: P111W1584

Fire Area A-1 (Side 1)

Fire Area A-1 (Side 1)

Fire Area A-4 (Side 2)

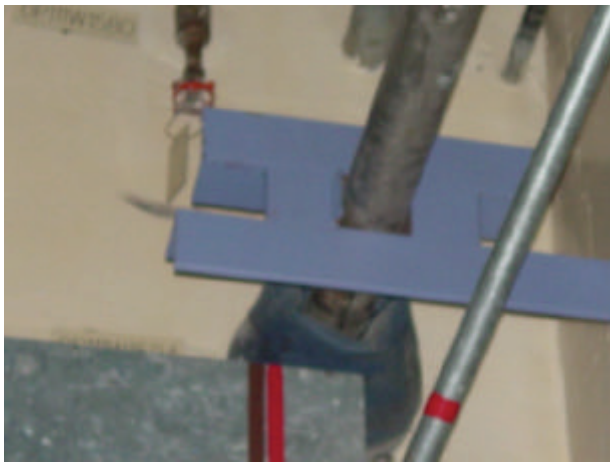

Fire Area A-4 (Side 2)

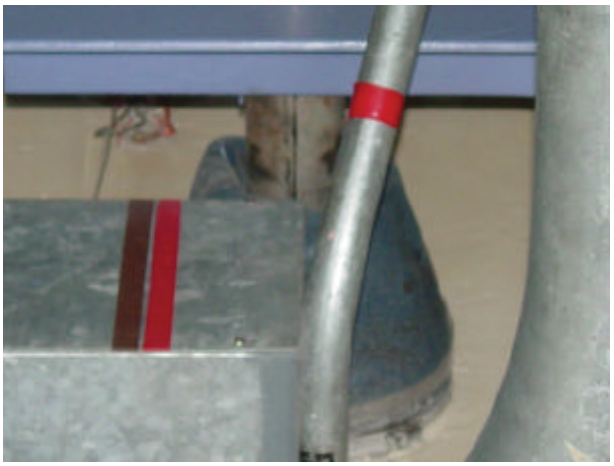

Penetration Seal Data

Appendix: B8

Heat Affected Zone Review: P111W1584

Fire Area (Side 1) A-1

1. Pull Box for conduit 5J1C2K, 3": Not within Heat Affected Zone. Pull box is 3-1/2" away from pipe.

Fire Area (Side 2) A-4

2. Pull Box not within Heat Affected Zone. Pull Box is 3-1/2" away from pipe. Could not visually identify the conduit entering the Pull Box because I could not climb or use a ladder due to contamination area. However same circuit as in Side 1.

Review Distances

(Reference M-663-00017A, Figure 7.2.3-1)

2-1/2" Pipe			
L1 & L2 Dist. (ft)	Temp. (°F)	R1 Radius (in)	R2 Radius (in)
0.5	1593	4	5.4
1	1321	2.8	4.1
1.5	1097	1.8	3.1
2	914	1	2.3
2.5	763	0.3	1.6
3	639	Contact	1.1
3.5	537		0.6
4	454		0.2
4.5	385		Contact

Side 1 Photo

Side 2 Photo

No photo required.

Sketch

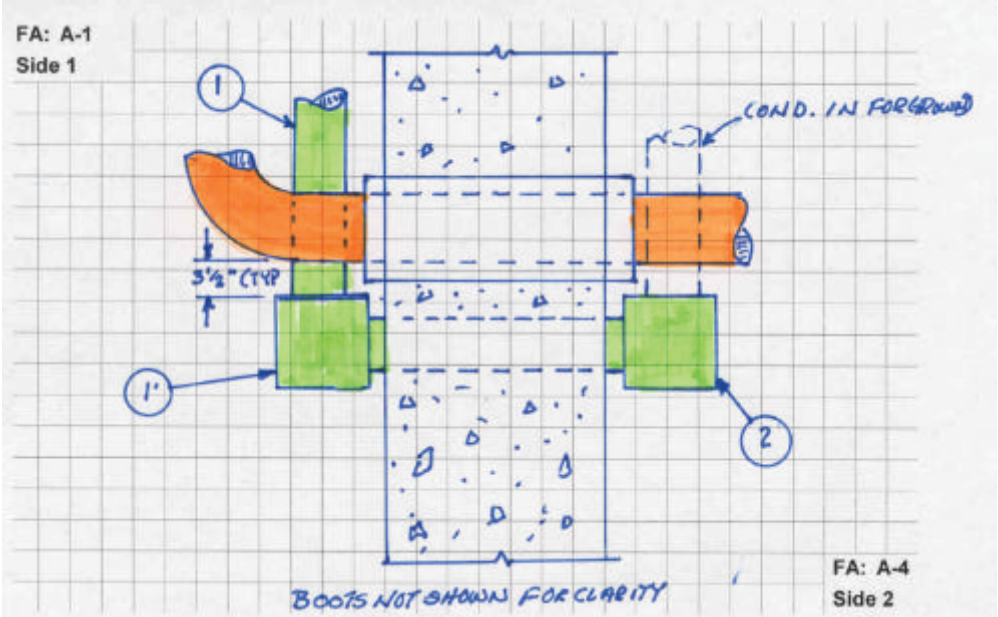

Penetration Seal Data

Appendix: B8

Penetration #: P121S0257

Penetration Type: RB-5A **Fire Area (Side 1):** A-1 **Fire Area (Side 2):** A-4

Loc./Elev.: 1988'-0" **M-0X Dwg:** M-0X1211

1. **Barrier Thickness:** 19"
2. **Opening Size:** 12"D
3. **Penetrants:** (1) 8"P
4. **Sealant Type:** HDSE/HDLE, Ceramic Fiber
5. **Damming Side1:** Boot
6. **Damming Side 2:** Boot
7. **Damming Continuity (Acc/Rej):** N/A
8. **Boot Condition (Acc/Rej):** Accept
9. **Sealant Depth:** Assumed Per Detail
10. **Annular Gap (smallest):** 1"
11. **Gap between pen:** N/A
12. **Barrier Type:** F R W
13. **Opening Sleeved or Concrete:** Steel
14. **Pipe Insulated:** No

Wayne Aregood
Prepared By:

Jeff Suter
Reviewed By:

Walkdown Comments:

Slab Thickness determined from drawing C-0C1211

Sketch:

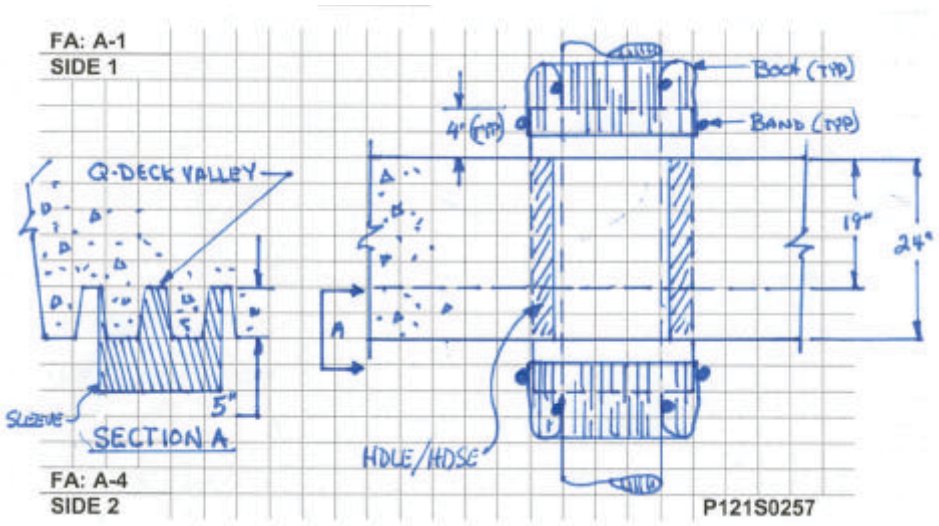

Penetration Seal Data

Appendix: B8

Photos: P121S0257

Fire Area A-1 (Side 1)

Fire Area A-1 (Side 1)

Fire Area A-4 (Side 2)

Fire Area A-4 (Side 2)

Penetration Seal Data

Appendix: B8

Heat Affected Zone Review: P121S0257

Fire Area (Side 1) A-1

No issues within Heat Affected Zone

Fire Area (Side 2) A-4

No issues within Heat Affected Zone

Review Distances

(Reference M-663-00017A, Figure 7.2.3-1)

8" Pipe			
L1 & L2 Dist. (ft)	Temp. (°F)	R1 Radius (in)	R2 Radius (in)
0.5	1677	4.4	5.8
1	1463	3.4	4.8
1.5	1277	2.6	3.9
2	1116	1.9	3.2
2.5	976	1.2	2.6
3	855	0.7	2
3.5	750	0.2	1.6
4	659	Contact	1.2
4.5	581		0.8
5	512		0.5
5.5	453		0.2
6	402		0
6.5	358		Contact

Side 1 Photo

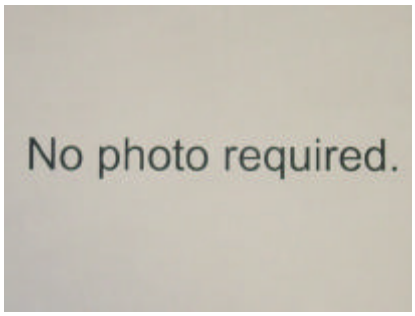

Side 2 Photo

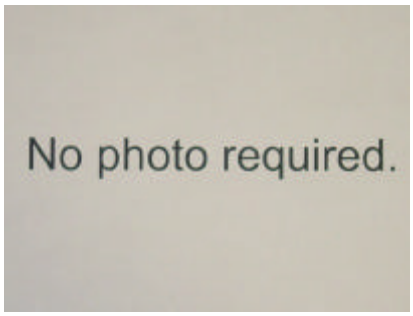

Sketch

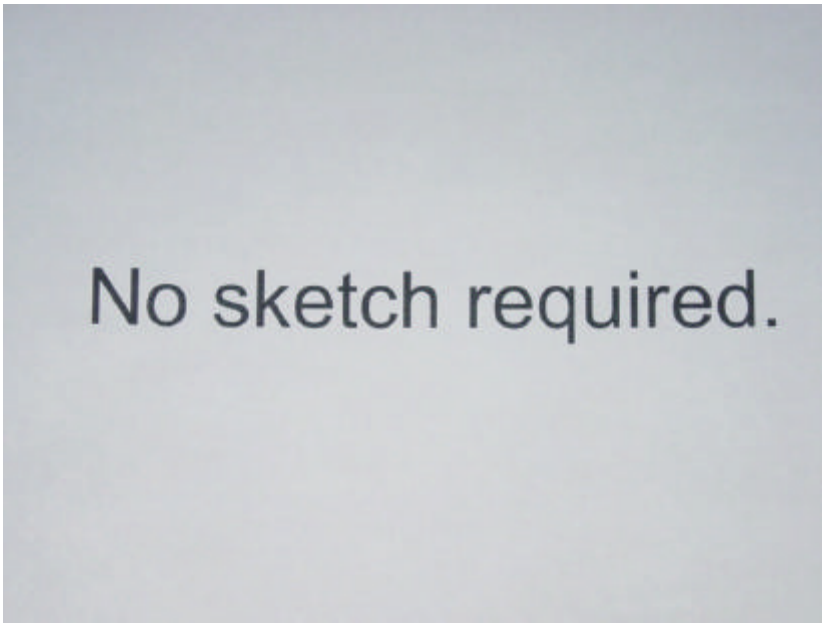

Penetration Seal Data

Appendix: B8

Penetration #: P121S0258

Penetration Type: RB-5A **Fire Area (Side 1):** A-1 **Fire Area (Side 2):** A-4

Loc./Elev.: 1988'-0" **M-0X Dwg:** M-0X1211

1. **Barrier Thickness:** 22"
2. **Opening Size:** 14"D
3. **Penetrants:** (1) 8"P
4. **Sealant Type:** HDSE/HDLE, Ceramic Fiber
5. **Damming Side1:** Boot
6. **Damming Side 2:** Boot
7. **Damming Continuity (Acc/Rej):** N/A
8. **Boot Condition (Acc/Rej):** Accept
9. **Sealant Depth:** Assumed Per Detail
10. **Annular Gap (smallest):** 2 1/2"
11. **Gap between pen:** N/A
12. **Barrier Type:** F R W
13. **Opening Sleeved or Concrete:** Steel
14. **Pipe Insulated:** No

Wayne Aregood
Prepared By:

Jeff Suter
Reviewed By:

Walkdown Comments:

Slab Thickness determined from drawing C-0C1211

Sketch:

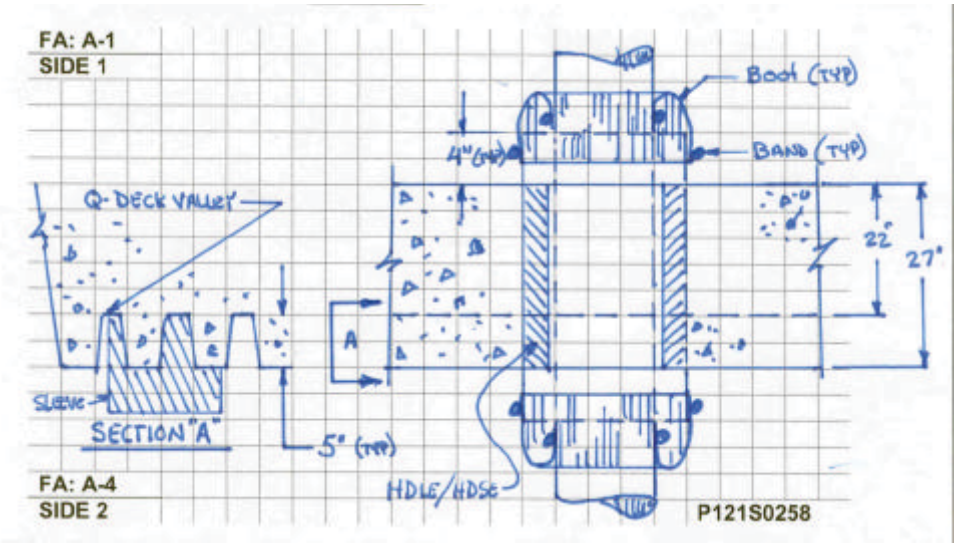

Penetration Seal Data

Appendix: B8

Photos: P121S0258

Fire Area A-1 (Side 1)

Fire Area A-1 (Side 1)

Fire Area A-4 (Side 2)

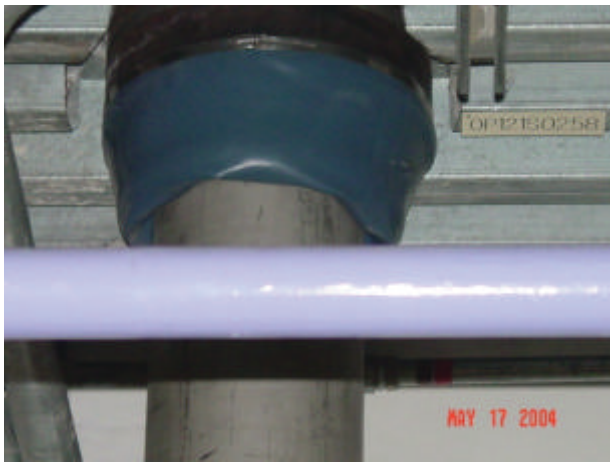

Fire Area A-4 (Side 2)

Penetration Seal Data

Appendix: B8

Heat Affected Zone Review: P121S0258

Fire Area (Side 1) A-1

No issues within Heat Affected Zone

Fire Area (Side 2) A-4

1. 4U3F5F, 2" Cond.: Measured, not within Heat Affected Zone.
2. 4U3F1H, 1-1/2" Cond.: Measured, not within Heat Affected Zone.
3. 4U3F1J, 1-1/2" Cond.: Measured, not within Heat Affected Zone.

Review Distances

(Reference M-663-00017A, Figure 7.2.3-1)

8" Pipe			
L1 & L2 Dist. (ft)	Temp. (°F)	R1 Radius (in)	R2 Radius (in)
0.5	1677	4.4	5.8
1	1463	3.4	4.8
1.5	1277	2.6	3.9
2	1116	1.9	3.2
2.5	976	1.2	2.6
3	855	0.7	2
3.5	750	0.2	1.6
4	659	Contact	1.2
4.5	581		0.8
5	512		0.5
5.5	453		0.2
6	402		0
6.5	358		Contact

Side 1 Photo

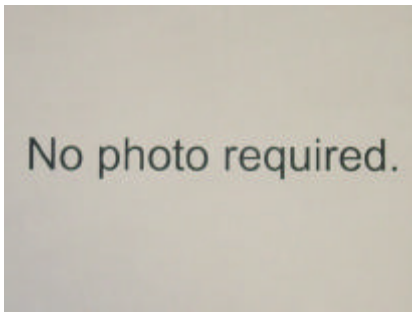

Side 2 Photo

Sketch

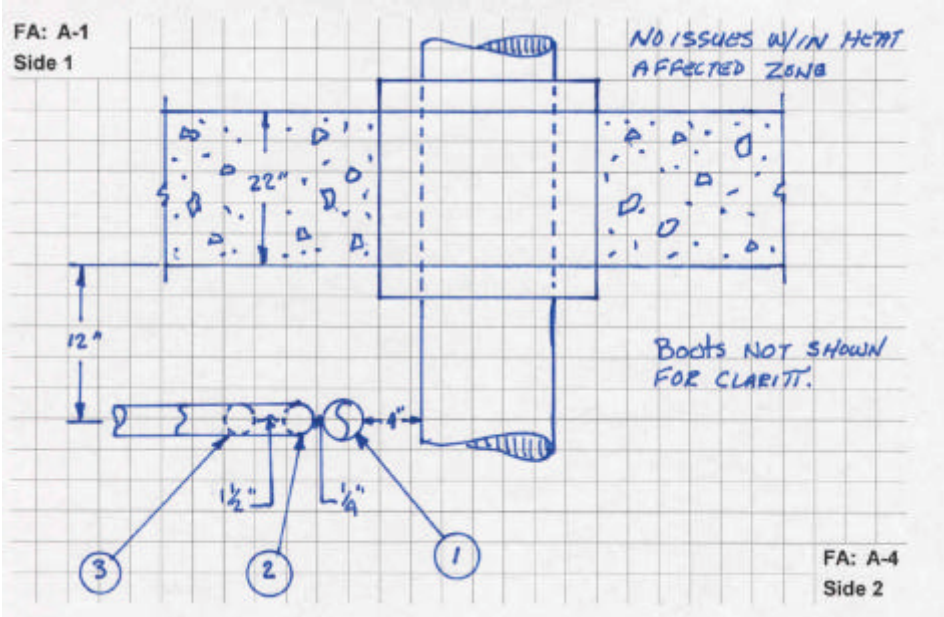

Penetration Seal Data

Appendix: B8

Penetration #: P121S0263

Penetration Type: RB-5A **Fire Area (Side 1):** A-1 **Fire Area (Side 2):** A-4

Loc./Elev.: 1988'-0" **M-0X Dwg:** M-0X1211

1. **Barrier Thickness:** 19"
2. **Opening Size:** 12" D
3. **Penetrants:** (1) 6"P
4. **Sealant Type:** HDSE/HDLE, Ceramic Fiber
5. **Damming Side1:** Boot
6. **Damming Side 2:** Boot
7. **Damming Continuity (Acc/Rej):** N/A
8. **Boot Condition (Acc/Rej):** Accept
9. **Sealant Depth:** Assumed Per Detail
10. **Annular Gap (smallest):** 2 1/2"
11. **Gap between pen:** N/A
12. **Barrier Type:** F R W
13. **Opening Sleeved or Concrete:** Steel
14. **Pipe Insulated:** No

Wayne Aregood

Prepared By:

Jeff Suter

Reviewed By:

Walkdown Comments:

Slab thickness determined by drawing C-0C1211

Sketch:

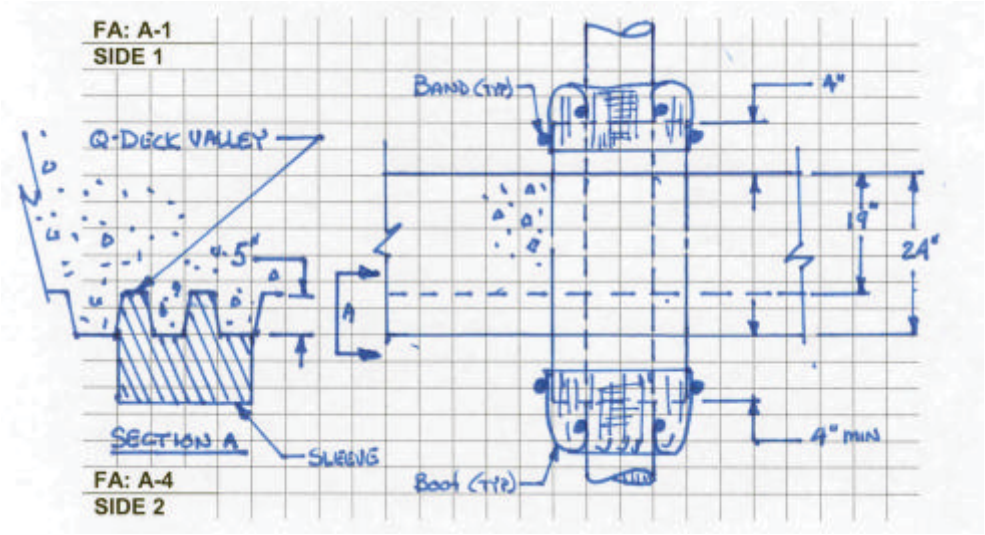

Penetration Seal Data

Appendix: B8

Photos: P121S0263

Fire Area A-1 (Side 1)

Fire Area A-1 (Side 1)

Fire Area A-4 (Side 2)

Fire Area A-4 (Side 2)

Penetration Seal Data

Appendix: B8

Heat Affected Zone Review: P121S0263

Fire Area (Side 1) A-1

No issues within Heat Affected Zone.

Fire Area (Side 2) A-4

No issues within Heat Affected Zone.

Review Distances

(Reference M-663-00017A, Figure 7.2.3-1)

6" Pipe			
L1 & L2 Dist. (ft)	Temp. (°F)	R1 Radius (in)	R2 Radius (in)
0.5	1659	4.3	5.7
1	1431	3.3	4.6
1.5	1236	2.4	3.8
2	1069	1.7	3
2.5	925	1	2.4
3	803	0.5	1.8
3.5	698	Contact	1.3
4	608		0.9
4.5	531		0.6
5	464		0.3
5.5	408		0
6	359		Contact

Side 1 Photo

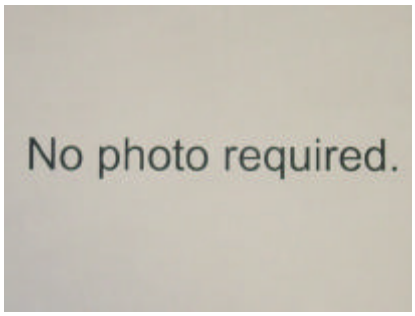

Side 2 Photo

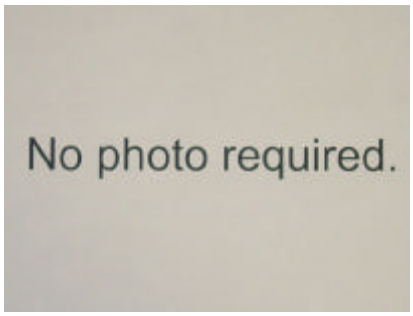

Sketch

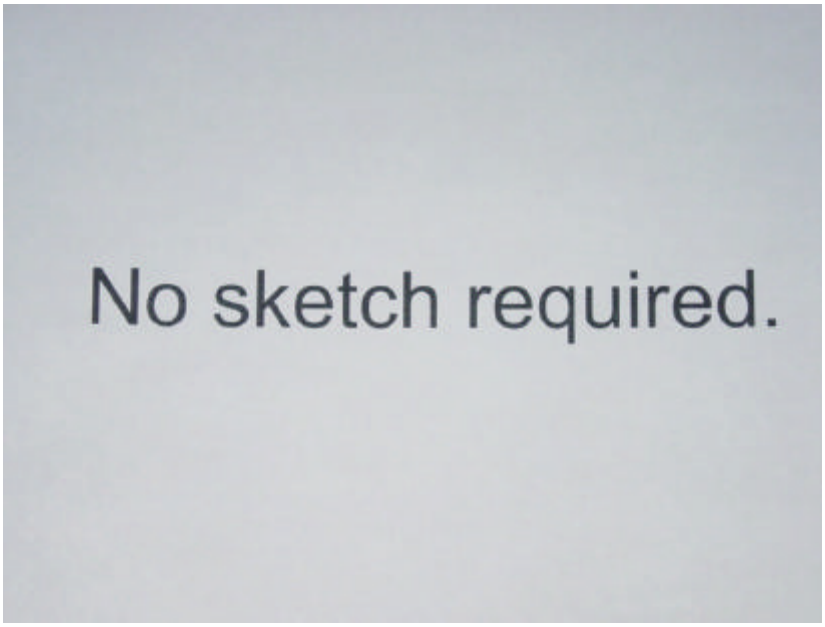

Penetration Seal Data

Appendix: B8

Penetration #: P121S0266

Penetration Type: RB-5A **Fire Area (Side 1):** A-1 **Fire Area (Side 2):** A-4

Loc./Elev.: 1988'-0" **M-0X Dwg:** M-0X1211

1. **Barrier Thickness:** 22"
2. **Opening Size:** 14" D
3. **Penetrants:** (1) 4"P
4. **Sealant Type:** HDSE/HDLE, Ceramic Fiber
5. **Damming Side1:** Boot
6. **Damming Side 2:** Boot
7. **Damming Continuity (Acc/Rej):** N/A
8. **Boot Condition (Acc/Rej):** Accept
9. **Sealant Depth:** Assumed Per Detail
10. **Annular Gap (smallest):** 4 1/2"
11. **Gap between pen:** N/A
12. **Barrier Type:** F R W
13. **Opening Sleeved or Concrete:** Steel
14. **Pipe Insulated:** No

Wayne Aregood
Prepared By:

Jeff Suter
Reviewed By:

Walkdown Comments:

Slab thickness determined from drawing C-0C1211.

Sketch:

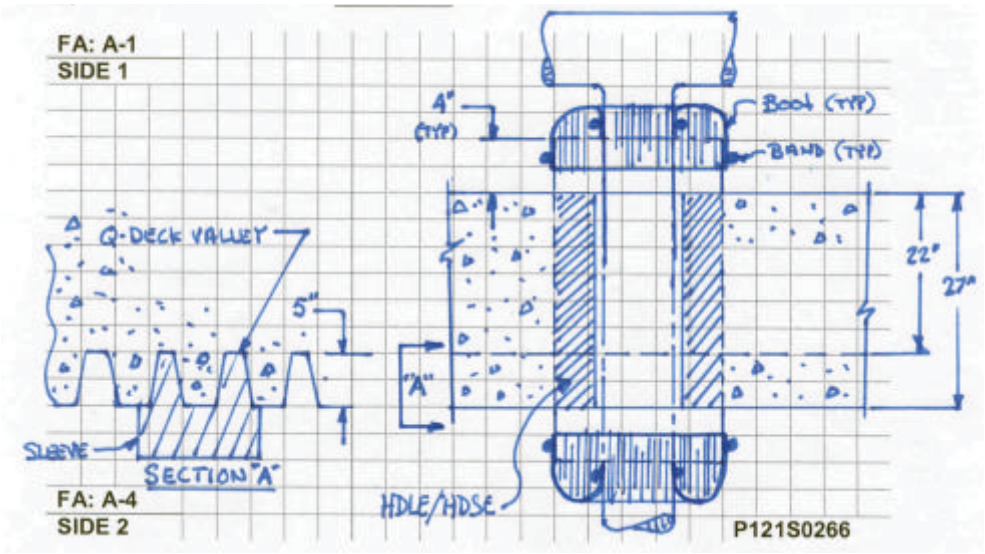

Penetration Seal Data

Appendix: B8

Photos: P121S0266

Fire Area A-1 (Side 1)

Fire Area A-1 (Side 1)

Fire Area A-4 (Side 2)

Fire Area A-4 (Side 2)

Penetration Seal Data

Appendix: B8

Heat Affected Zone Review: P121S0266

Fire Area (Side 1) A-1

No issues within Heat Affected Zone

Fire Area (Side 2) A-4

No issues within Heat Affected Zone

Review Distances

(Reference M-663-00017A, Figure 7.2.3-1)

4" Pipe			
L1 & L2 Dist. (ft)	Temp. (°F)	R1 Radius (in)	R2 Radius (in)
0.5	1625	4.2	5.5
1	1374	3	4.4
1.5	1163	2.1	3.4
2	987	1.3	2.6
2.5	839	0.6	2
3	715	0.1	1.4
3.5	610	Contact	0.9
4	523		0.6
4.5	450		0.2
5	389		Contact

Side 1 Photo

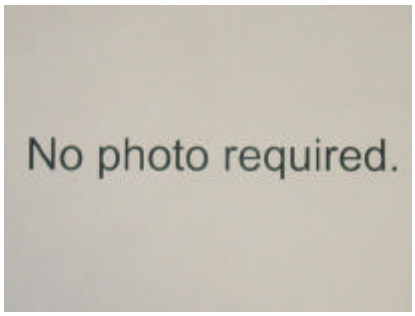

Side 2 Photo

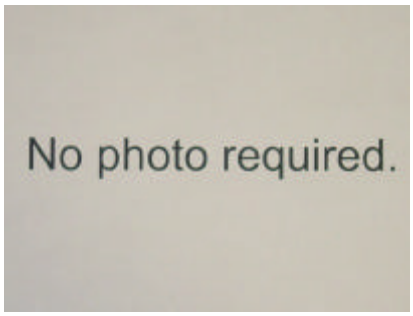

Sketch

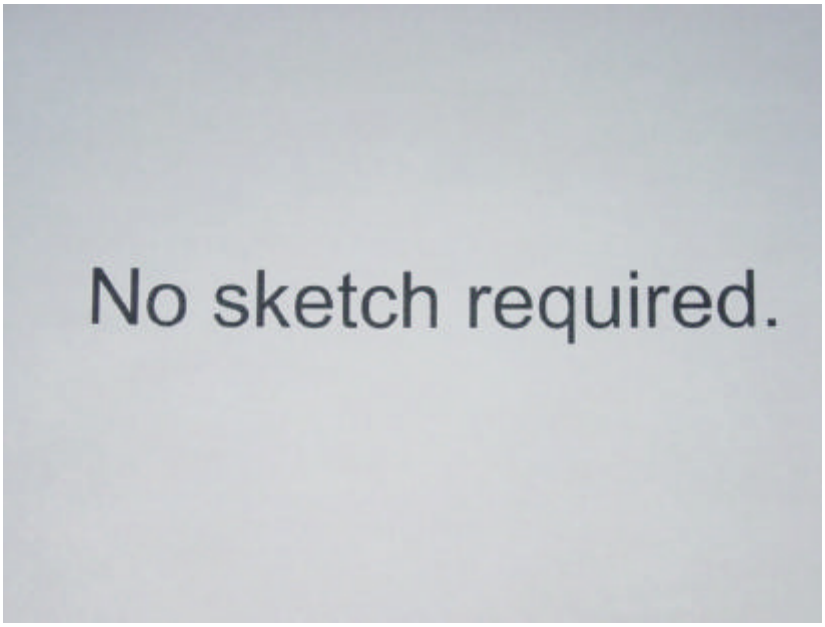

Penetration Seal Data

Appendix: B8

Penetration #: P121S0267

Penetration Type: RB-5A **Fire Area (Side 1):** A-1 **Fire Area (Side 2):** A-4

Loc./Elev.: 1988'-0" **M-0X Dwg:** M-0X1211

1. **Barrier Thickness:** 22"
2. **Opening Size:** 14" D
3. **Penetrants:** (1) 4"P
4. **Sealant Type:** HDSE/HDLE, Ceramic Fiber
5. **Damming Side1:** Boot
6. **Damming Side 2:** Boot
7. **Damming Continuity (Acc/Rej):** N/A
8. **Boot Condition (Acc/Rej):** Accept
9. **Sealant Depth:** Assumed Per Detail
10. **Annular Gap (smallest):** 3"
11. **Gap between pen:** N/A
12. **Barrier Type:** F R W
13. **Opening Sleeved or Concrete:** Steel
14. **Pipe Insulated:** No

Wayne Aregood
Prepared By:

Jeff Suter
Reviewed By:

Walkdown Comments:

Slab thickness determined by drawing C-0C1211

Sketch:

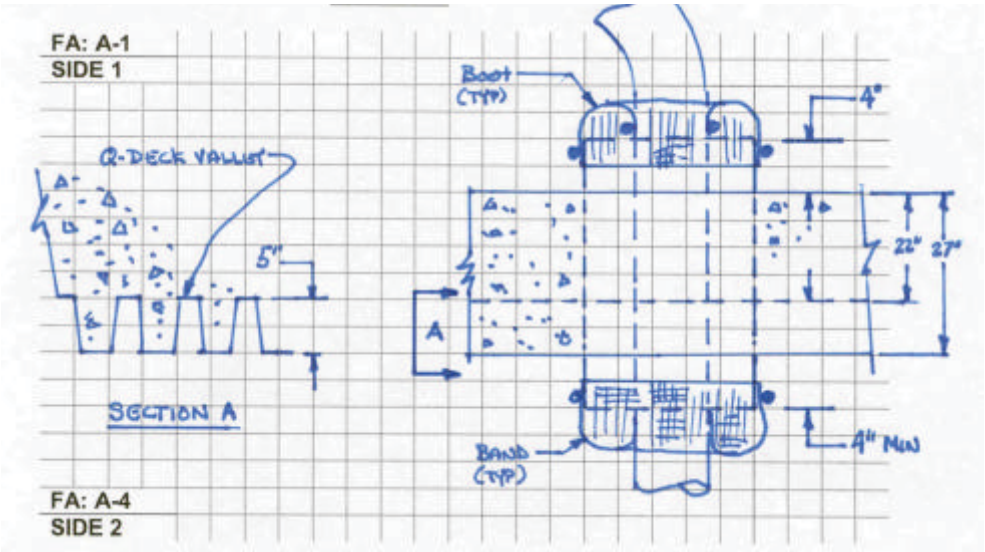

Penetration Seal Data

Appendix: B8

Photos: P121S0267

Fire Area A-1 (Side 1)

Fire Area A-1 (Side 1)

Fire Area A-4 (Side 2)

Fire Area A-4 (Side 2)

Penetration Seal Data

Appendix: B8

Heat Affected Zone Review: P121S0267

Fire Area (Side 1) A-1

No issues within Heat Affected Zone

Fire Area (Side 2) A-4

1. 6U102O: 3/4" Cond.: Measured, not within Heat Affected Zone, OK!

Review Distances

(Reference M-663-00017A, Figure 7.2.3-1)

4" Pipe			
L1 & L2 Dist. (ft)	Temp. (°F)	R1 Radius (in)	R2 Radius (in)
0.5	1625	4.2	5.5
1	1374	3	4.4
1.5	1163	2.1	3.4
2	987	1.3	2.6
2.5	839	0.6	2
3	715	0.1	1.4
3.5	610	Contact	0.9
4	523		0.6
4.5	450		0.2
5	389		Contact

Side 1 Photo

No photo required.

Side 2 Photo

No photo required.

Sketch

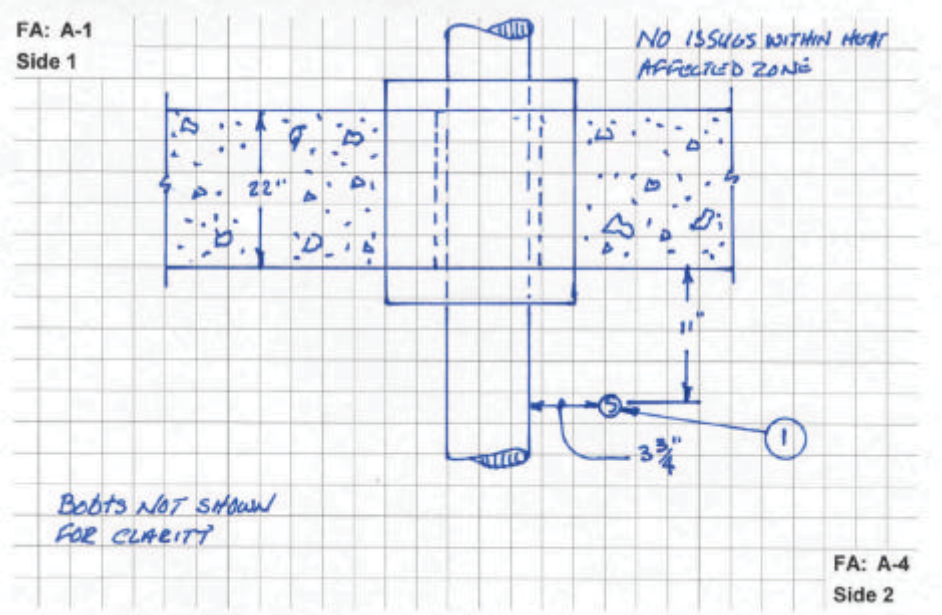

Penetration Seal Data

Appendix: B8

Penetration #: P121S0268

Penetration Type: RB-5A **Fire Area (Side 1):** A-1 **Fire Area (Side 2):** A-4

Loc./Elev.: 1988'-0" **M-0X Dwg:** M-0X1211

1. **Barrier Thickness:** 22"
2. **Opening Size:** 18" D
3. **Penetrants:** (1) 6"P
4. **Sealant Type:** HDSE/HDLE, Ceramic Fiber
5. **Damming Side1:** Boot
6. **Damming Side 2:** Boot
7. **Damming Continuity (Acc/Rej):** N/A
8. **Boot Condition (Acc/Rej):** Accept
9. **Sealant Depth:** Assumed Per Detail
10. **Annular Gap (smallest):** 4"
11. **Gap between pen:** N/A
12. **Barrier Type:** F R W
13. **Opening Sleeved or Concrete:** Steel
14. **Pipe Insulated:** No

Wayne Aregood
Prepared By:

Jeff Suter
Reviewed By:

Walkdown Comments:

Slab Thickness determined by drawing C-0C1211

Sketch:

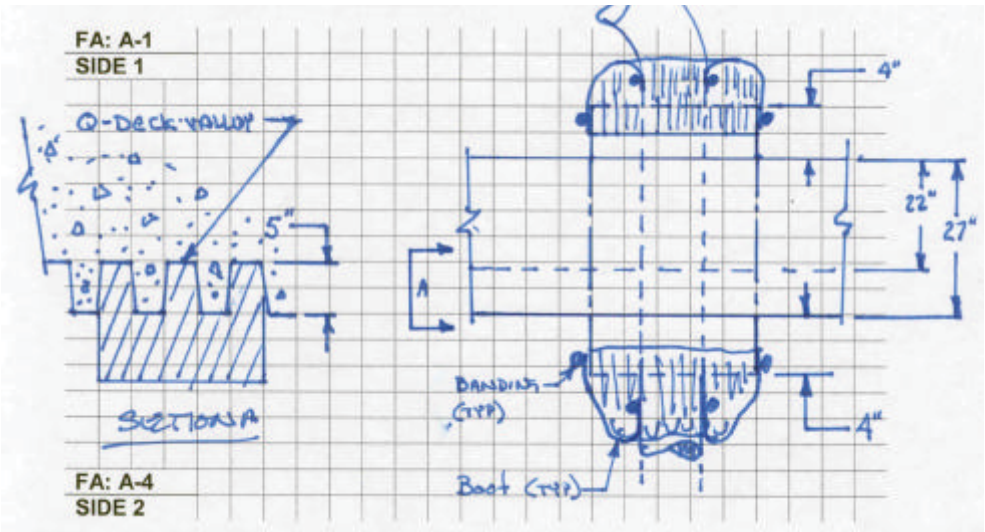

Penetration Seal Data

Appendix: B8

Photos: P121S0268

Fire Area A-1 (Side 1)

Fire Area A-1 (Side 1)

Fire Area A-4 (Side 2)

Fire Area A-4 (Side 2)

Penetration Seal Data

Appendix: B8

Heat Affected Zone Review: P121S0268

Fire Area (Side 1) A-1

No issues within Heat Affected Zone.

Fire Area (Side 2) A-4

No issues within Heat Affected Zone.

Review Distances

(Reference M-663-00017A, Figure 7.2.3-1)

6" Pipe			
L1 & L2 Dist. (ft)	Temp. (°F)	R1 Radius (in)	R2 Radius (in)
0.5	1659	4.3	5.7
1	1431	3.3	4.6
1.5	1236	2.4	3.8
2	1069	1.7	3
2.5	925	1	2.4
3	803	0.5	1.8
3.5	698	Contact	1.3
4	608		0.9
4.5	531		0.6
5	464		0.3
5.5	408		0
6	359		Contact

Side 1 Photo

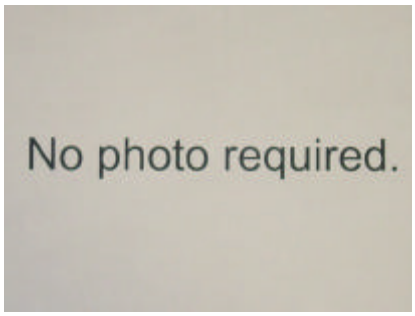

Side 2 Photo

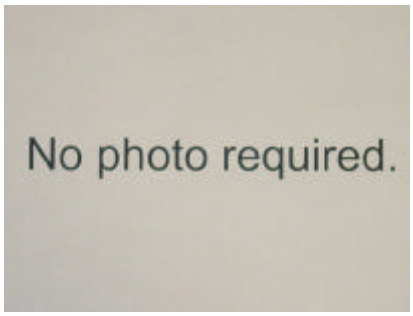

Sketch

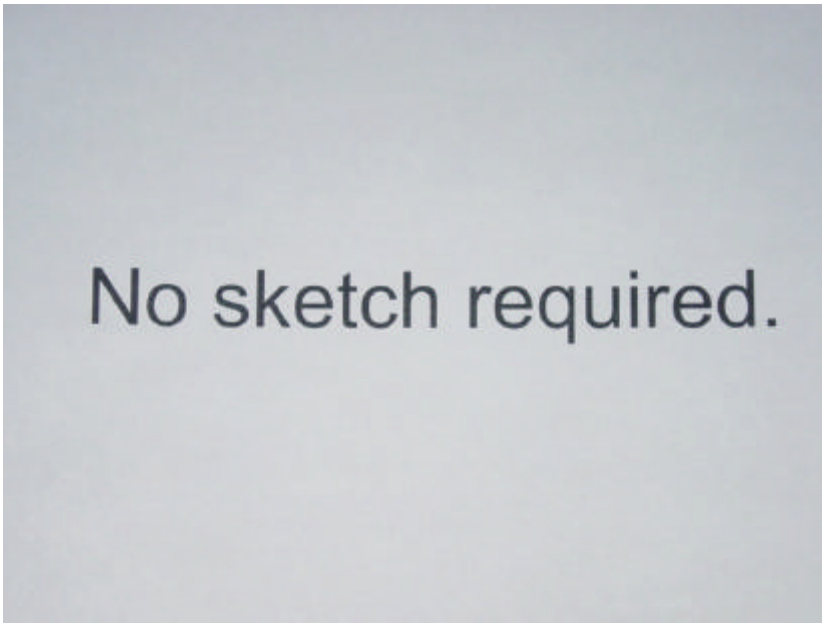

Penetration Seal Data

Appendix: B8

Penetration #: P121S0273

Penetration Type: RB-5A **Fire Area (Side 1):** A-1 **Fire Area (Side 2):** A-4

Loc./Elev.: 1988'-0" **M-0X Dwg:** M-0X1211

1. **Barrier Thickness:** 22"
2. **Opening Size:** 18" D
3. **Penetrants:** (1) 6"P
4. **Sealant Type:** HDSE/HDLE, Ceramic Fiber
5. **Damming Side1:** Boot
6. **Damming Side 2:** Boot
7. **Damming Continuity (Acc/Rej):** N/A
8. **Boot Condition (Acc/Rej):** Accept
9. **Sealant Depth:** Assumed Per Detail
10. **Annular Gap (smallest):** 5"
11. **Gap between pen:** N/A
12. **Barrier Type:** F R W
13. **Opening Sleeved or Concrete:** Steel
14. **Pipe Insulated:** No

Wayne Aregood
Prepared By:

Jeff Suter
Reviewed By:

Walkdown Comments:

Slab thickness determined from drawing C-0C1211.

Sketch:

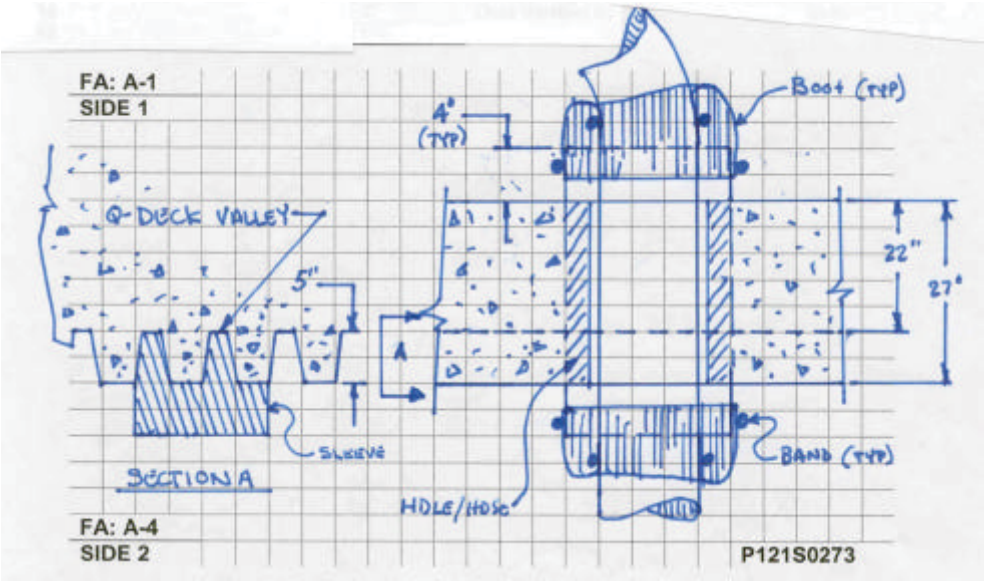

Penetration Seal Data

Appendix: B8

Photos: P121S0273

Fire Area A-1 (Side 1)

Fire Area A-1 (Side 1)

Fire Area A-4 (Side 2)

Fire Area A-4 (Side 2)

Penetration Seal Data

Appendix: B8

Heat Affected Zone Review: P121S0273

Fire Area (Side 1) A-1

No issues within Heat Affected Zone.

Fire Area (Side 2) A-4

No issues within Heat Affected Zone.

Review Distances

(Reference M-663-00017A, Figure 7.2.3-1)

6" Pipe			
L1 & L2 Dist. (ft)	Temp. (°F)	R1 Radius (in)	R2 Radius (in)
0.5	1659	4.3	5.7
1	1431	3.3	4.6
1.5	1236	2.4	3.8
2	1069	1.7	3
2.5	925	1	2.4
3	803	0.5	1.8
3.5	698	Contact	1.3
4	608		0.9
4.5	531		0.6
5	464		0.3
5.5	408		0
6	359		Contact

Side 1 Photo

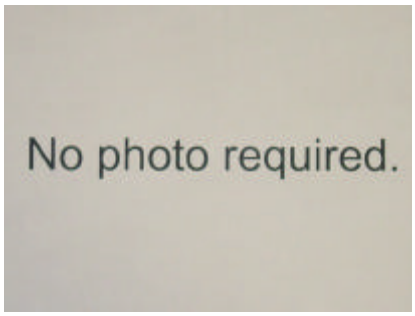

Side 2 Photo

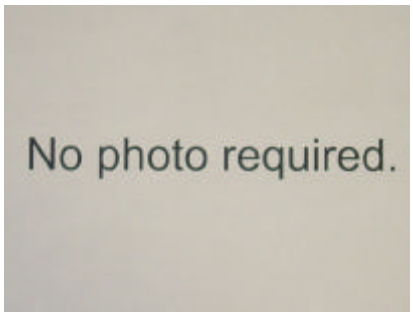

Sketch

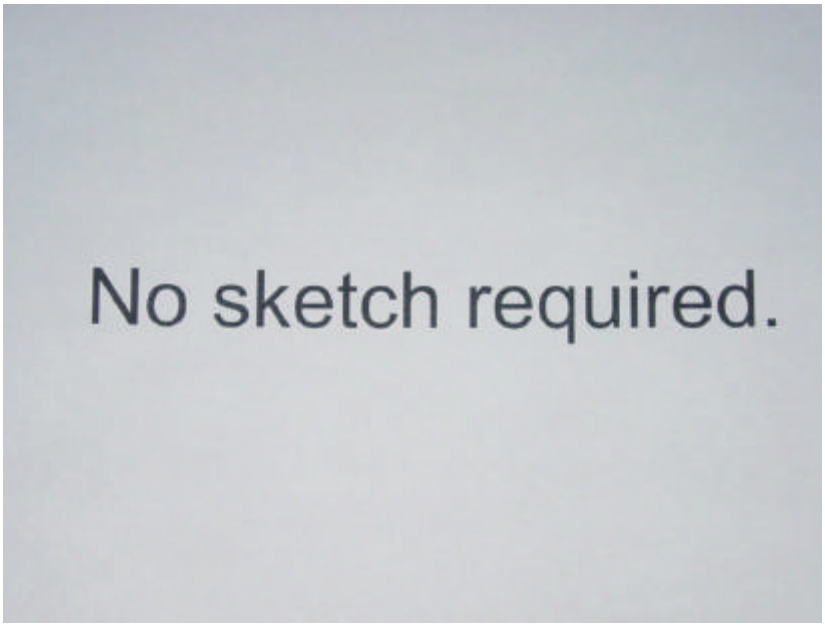

Penetration Seal Data

Appendix: B8

Penetration #: P121S0274

Penetration Type: RB-5A **Fire Area (Side 1):** A-1 **Fire Area (Side 2):** A-4

Loc./Elev.: 1988'-0" **M-0X Dwg:** M-0X1211

1. **Barrier Thickness:** 22"
2. **Opening Size:** 18" D
3. **Penetrants:** (1) 6"P
4. **Sealant Type:** HDSE/HDLE, Ceramic Fiber
5. **Damming Side1:** Boot
6. **Damming Side 2:** Boot
7. **Damming Continuity (Acc/Rej):** N/A
8. **Boot Condition (Acc/Rej):** Accept
9. **Sealant Depth:** Assumed Per Detail
10. **Annular Gap (smallest):** 2"
11. **Gap between pen:** N/A
12. **Barrier Type:** F R W
13. **Opening Sleeved or Concrete:** Steel
14. **Pipe Insulated:** No

Wayne Aregood
Prepared By:

Jeff Suter
Reviewed By:

Walkdown Comments:
Slab thickness determined from drawing C-0C1211.

Sketch:

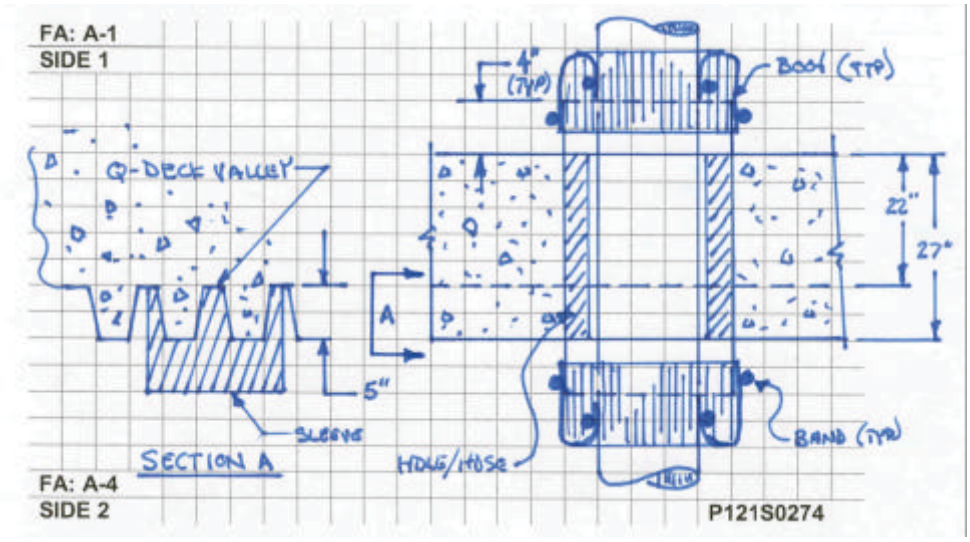

Penetration Seal Data

Appendix: B8

Photos: P121S0274

Fire Area A-1 (Side 1)

Fire Area A-1 (Side 1)

Fire Area A-4 (Side 2)

Fire Area A-4 (Side 2)

Penetration Seal Data

Appendix: B8

Heat Affected Zone Review: P121S0274

Fire Area (Side 1) A-1

No issues within Heat Affected Zone.

Fire Area (Side 2) A-4

No issues within Heat Affected Zone.

Review Distances

(Reference M-663-00017A, Figure 7.2.3-1)

6" Pipe			
L1 & L2 Dist. (ft)	Temp. (°F)	R1 Radius (in)	R2 Radius (in)
0.5	1659	4.3	5.7
1	1431	3.3	4.6
1.5	1236	2.4	3.8
2	1069	1.7	3
2.5	925	1	2.4
3	803	0.5	1.8
3.5	698	Contact	1.3
4	608		0.9
4.5	531		0.6
5	464		0.3
5.5	408		0
6	359		Contact

Side 1 Photo

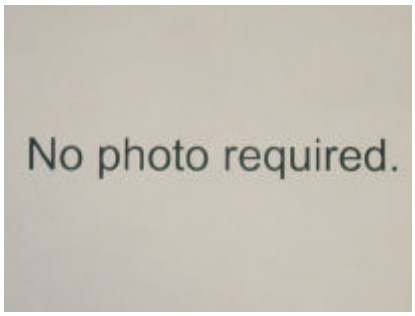

Side 2 Photo

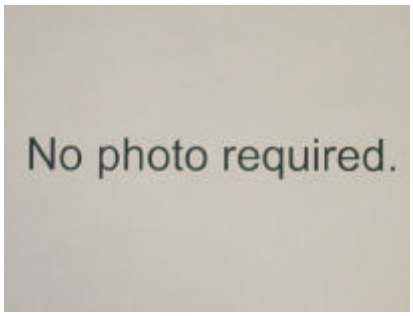

Sketch

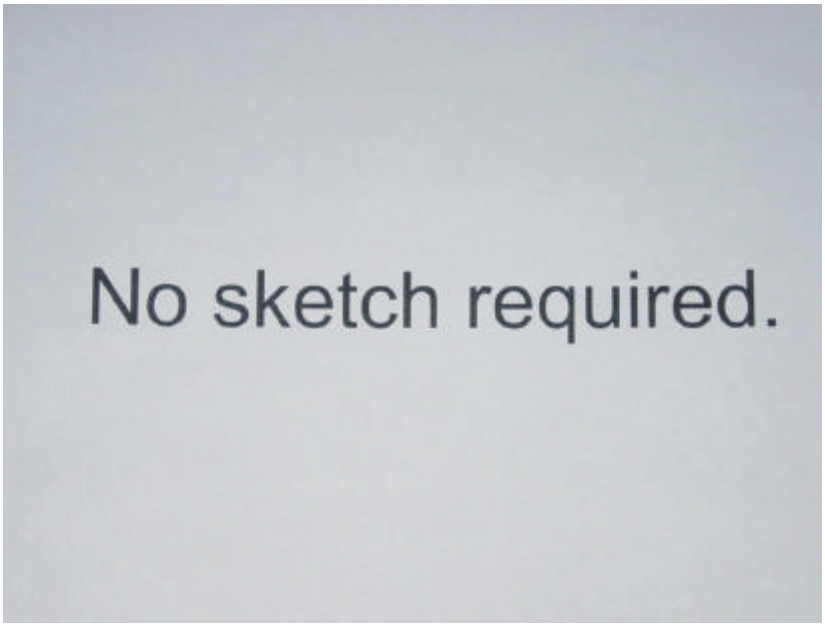

Penetration Seal Data

Appendix: B8

Penetration #: P121S0275

Penetration Type: RB-5A **Fire Area (Side 1):** A-1 **Fire Area (Side 2):** A-4

Loc./Elev.: 1988'-0" **M-0X Dwg:** M-0X1211

1. **Barrier Thickness:** 19"
2. **Opening Size:** 24" D
3. **Penetrants:** (1) 10"P
4. **Sealant Type:** HDSE/HDLE, Ceramic Fiber
5. **Damming Side1:** Boot
6. **Damming Side 2:** Boot
7. **Damming Continuity (Acc/Rej):** N/A
8. **Boot Condition (Acc/Rej):** Accept
9. **Sealant Depth:** Assumed Per Detail
10. **Annular Gap (smallest):** 1-1/2"
11. **Gap between pen:** N/A
12. **Barrier Type:** F R W
13. **Opening Sleeved or Concrete:** Steel
14. **Pipe Insulated:** Yes

Wayne Aregood
Prepared By:

Jeff Suter
Reviewed By:

Walkdown Comments:
Slab thickness determined from drawing C-0C1211.

Sketch:

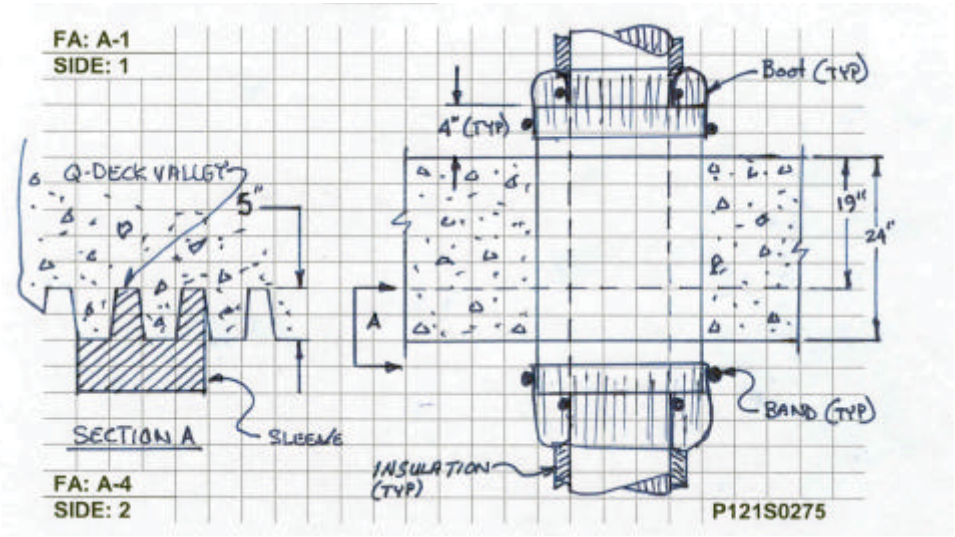

Penetration Seal Data

Appendix: B8

Photos: P121S0275

Fire Area A-1 (Side 1)

Fire Area A-1 (Side 1)

Fire Area A-4 (Side 2)

Fire Area A-4 (Side 2)

Penetration Seal Data

Appendix: B8

Heat Affected Zone Review: P121S0275

Fire Area (Side 1) A-1

No issues within Heat Affected Zone

Fire Area (Side 2) A-4

1. 4U1038, 1" Cond.: Not within Heat Affected Zone

Review Distances

(Reference M-663-00017A, Figure 7.2.3-1)

10" Pipe			
L1 & L2 Dist. (ft)	Temp. (°F)	R1 Radius (in)	R2 Radius (in)
0.5	1697	4.5	5.8
1	1497	3.6	4.9
1.5	1321	2.8	4.1
2	1167	2.1	3.5
2.5	1032	1.5	2.8
3	914	1	2.3
3.5	810	0.5	1.8
4	719	0.1	1.4
4.5	639	Contact	1.1
5	569		0.8
5.5	508		0.5
6	454		0.2
6.5	406		0
7	365		Contact

Side 1 Photo

No photo required.

Side 2 Photo

No photo required.

Sketch

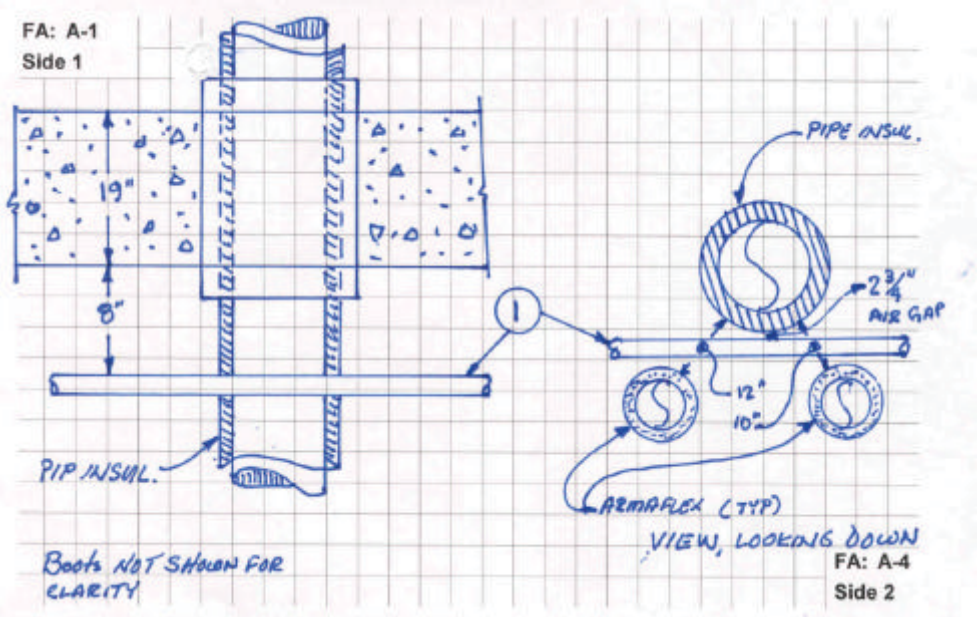

Penetration Seal Data

Appendix: B8

Penetration #: P121S0279

Penetration Type: RB-5A **Fire Area (Side 1):** A-1 **Fire Area (Side 2):** A-4

Loc./Elev.: 1988'-0" **M-0X Dwg:** M-0X1211

1. **Barrier Thickness:** 22"
2. **Opening Size:** 20" D
3. **Penetrants:** (1) 12"P
4. **Sealant Type:** HDSE/HDLE, Ceramic Fiber
5. **Damming Side1:** Boot
6. **Damming Side 2:** Boot
7. **Damming Continuity (Acc/Rej):** N/A
8. **Boot Condition (Acc/Rej):** Accept
9. **Sealant Depth:** Assumed Per Detail
10. **Annular Gap (smallest):** 1"
11. **Gap between pen:** N/A
12. **Barrier Type:** F R W
13. **Opening Sleeved or Concrete:** Steel
14. **Pipe Insulated:** No

Wayne Aregood
Prepared By:

Jeff Suter
Reviewed By:

Walkdown Comments:

Slab thickness determined from drawing C-0C1211.

Sketch:

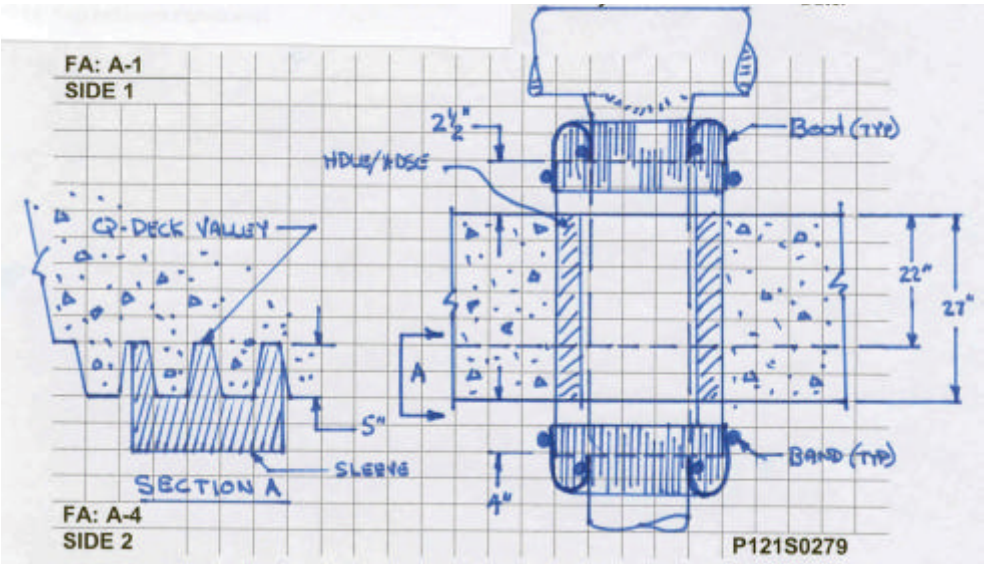

Penetration Seal Data

Appendix: B8

Photos: P121S0279

Fire Area A-1 (Side 1)

Fire Area A-1 (Side 1)

Fire Area A-4 (Side 2)

Fire Area A-4 (Side 2)

Penetration Seal Data

Appendix: B8

Heat Affected Zone Review: P121S0279

Fire Area (Side 1) A-1

2. 1-1/2" Stainless Steel Pipe, no issue

Fire Area (Side 2) A-4

1. 4U3F5G, 2" Cond., measured not within Heat Affected Zone.

Review Distances

(Reference M-663-00017A, Figure 7.2.3-1)

12" Pipe			
L1 & L2 Dist. (ft)	Temp. (°F)	R1 Radius (in)	R2 Radius (in)
0.5	1712	4.6	5.9
1	1524	3.7	5.1
1.5	1357	3	4.3
2	1209	2.3	3.6
2.5	1078	1.7	3.1
3	962	1.2	2.5
3.5	860	0.7	2.1
4	769	0.3	1.7
4.5	689	Contact	1.3
5	618		1
5.5	555		0.7
6	499		0.4
6.5	450		0.2
7	406		0
7.5	368		Contact

Side 1 Photo

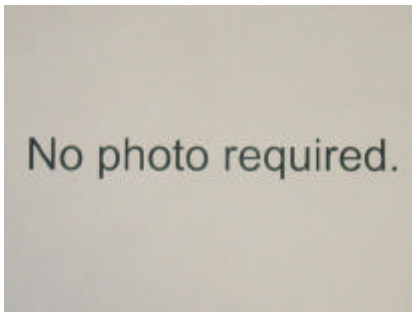

Side 2 Photo

Sketch

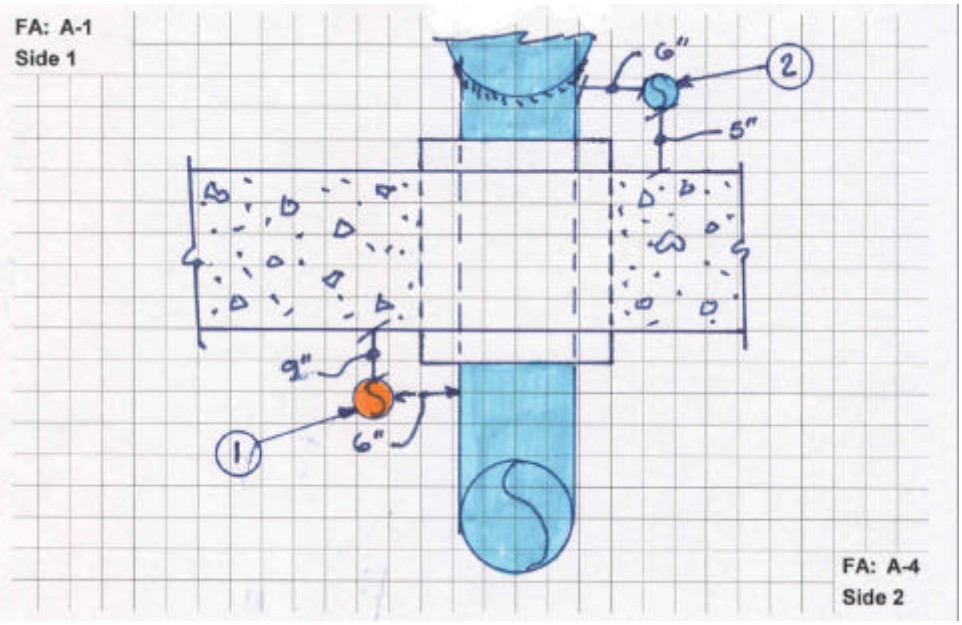

Penetration Seal Data

Appendix: B8

Penetration #: P121S0280

Penetration Type: RB-5A **Fire Area (Side 1):** A-1 **Fire Area (Side 2):** A-4

Loc./Elev.: 1988'-0" **M-0X Dwg:** M-0X1211

1. **Barrier Thickness:** 22"
2. **Opening Size:** 10" D
3. **Penetrants:** (1) 4"P
4. **Sealant Type:** HDSE/HDLE, Ceramic Fiber
5. **Damming Side1:** Boot
6. **Damming Side 2:** Boot
7. **Damming Continuity (Acc/Rej):** N/A
8. **Boot Condition (Acc/Rej):** Accept
9. **Sealant Depth:** Assumed Per Detail
10. **Annular Gap (smallest):** 3"
11. **Gap between pen:** N/A
12. **Barrier Type:** F R W
13. **Opening Sleeved or Concrete:** Steel
14. **Pipe Insulated:** No

Wayne Aregood
Prepared By:

Jeff Suter
Reviewed By:

Walkdown Comments:

Slab thickness determined from drawing C-0C1211.

Sketch:

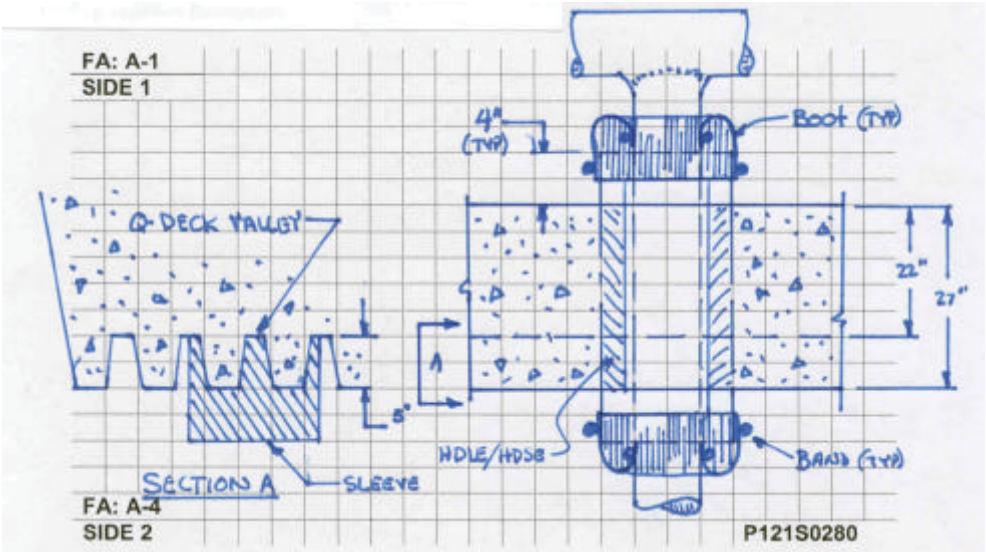

Penetration Seal Data

Appendix: B8

Photos: P121S0280

Fire Area A-1 (Side 1)

Fire Area A-1 (Side 1)

Fire Area A-4 (Side 2)

Fire Area A-4 (Side 2)

Penetration Seal Data

Appendix: B8

Heat Affected Zone Review: P121S0280

Fire Area (Side 1) A-1

No issues within Heat Affected Zone.

Fire Area (Side 2) A-4

No issues within Heat Affected Zone.

Review Distances

(Reference M-663-00017A, Figure 7.2.3-1)

4" Pipe			
L1 & L2 Dist. (ft)	Temp. (°F)	R1 Radius (in)	R2 Radius (in)
0.5	1625	4.2	5.5
1	1374	3	4.4
1.5	1163	2.1	3.4
2	987	1.3	2.6
2.5	839	0.6	2
3	715	0.1	1.4
3.5	610	Contact	0.9
4	523		0.6
4.5	450		0.2
5	389		Contact

Side 1 Photo

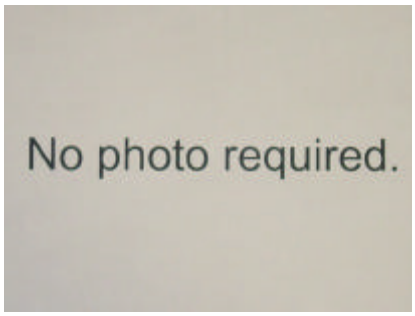

Side 2 Photo

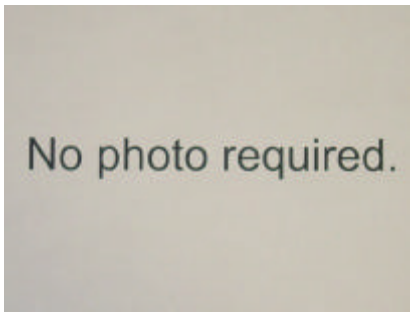

Sketch

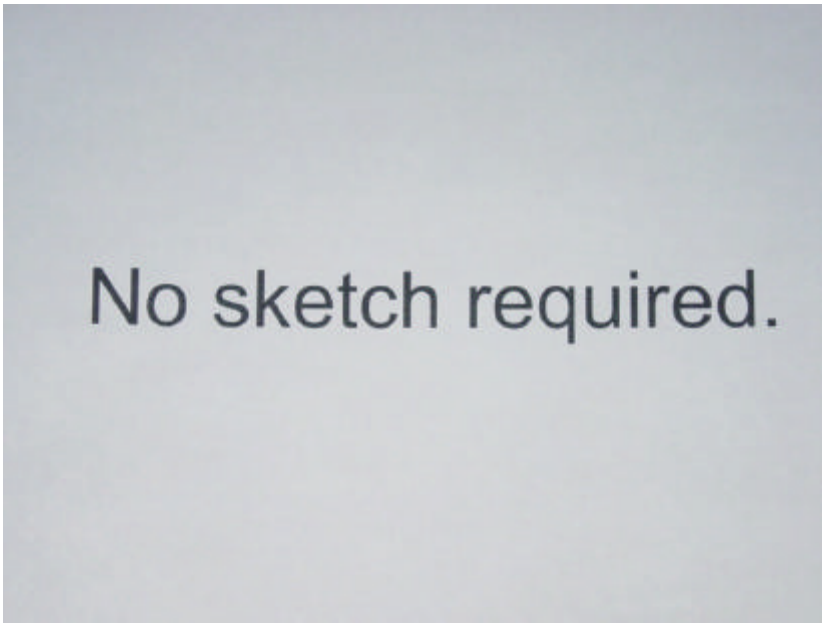

Penetration Seal Data

Appendix: B8

Penetration #: P121S0281

Penetration Type: RB-5A **Fire Area (Side 1):** A-1 **Fire Area (Side 2):** A-4

Loc./Elev.: 1988'-0" **M-0X Dwg:** M-0X1211

1. **Barrier Thickness:** 22"
2. **Opening Size:** 14" D
3. **Penetrants:** (1) 8"P
4. **Sealant Type:** HDSE/HDLE, Ceramic Fiber
5. **Damming Side1:** Boot
6. **Damming Side 2:** Boot
7. **Damming Continuity (Acc/Rej):** N/A
8. **Boot Condition (Acc/Rej):** Accept
9. **Sealant Depth:** Assumed Per Detail
10. **Annular Gap (smallest):** 1"
11. **Gap between pen:** N/A
12. **Barrier Type:** F R W
13. **Opening Sleeved or Concrete:** Steel
14. **Pipe Insulated:** No

Wayne Aregood
Prepared By:

Jeff Suter
Reviewed By:

Walkdown Comments:

Slab thickness determined from drawing C-0C1211.

Sketch:

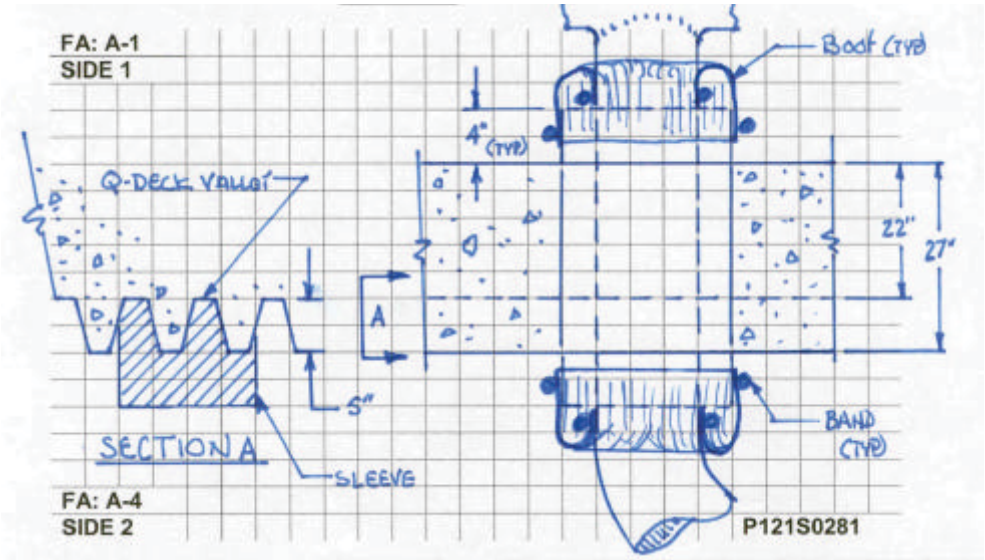

Penetration Seal Data

Appendix: B8

Photos: P121S0281

Fire Area A-1 (Side 1)

Fire Area A-1 (Side 1)

Fire Area A-4 (Side 2)

Fire Area A-4 (Side 2)

Penetration Seal Data

Appendix: B8

Heat Affected Zone Review: P121S0281

Fire Area (Side 1) A-1

No issues within Heat Affected Zone

Fire Area (Side 2) A-4

1. 4U3F1F, 1-1/2" Cond.: Within Heat Affected Zone, further review determined that this conduit is not designated required for PFSSD. Set-route control is necessary.
2. 4U3F1G, 1-1/2" Cond.: Not within Heat Affected Zone.
3. 4U3F5G, 2" Cond.: Not within Heat Affected Zone.
4. 4U3F04, 12 Cable Tray: This Cable Tray is PFSSD, but it is not within Heat Affected Zone. No Set-route control necessary.

Review Distances

(Reference M-663-00017A, Figure 7.2.3-1)

8" Pipe			
L1 & L2 Dist. (ft)	Temp. (°F)	R1 Radius (in)	R2 Radius (in)
0.5	1677	4.4	5.8
1	1463	3.4	4.8
1.5	1277	2.6	3.9
2	1116	1.9	3.2
2.5	976	1.2	2.6
3	855	0.7	2
3.5	750	0.2	1.6
4	659	Contact	1.2
4.5	581		0.8
5	512		0.5
5.5	453		0.2
6	402		0
6.5	358		Contact

Side 1 Photo

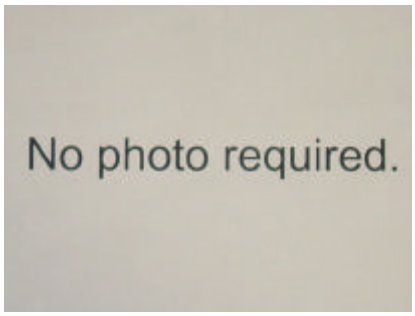

Side 2 Photo

Sketch

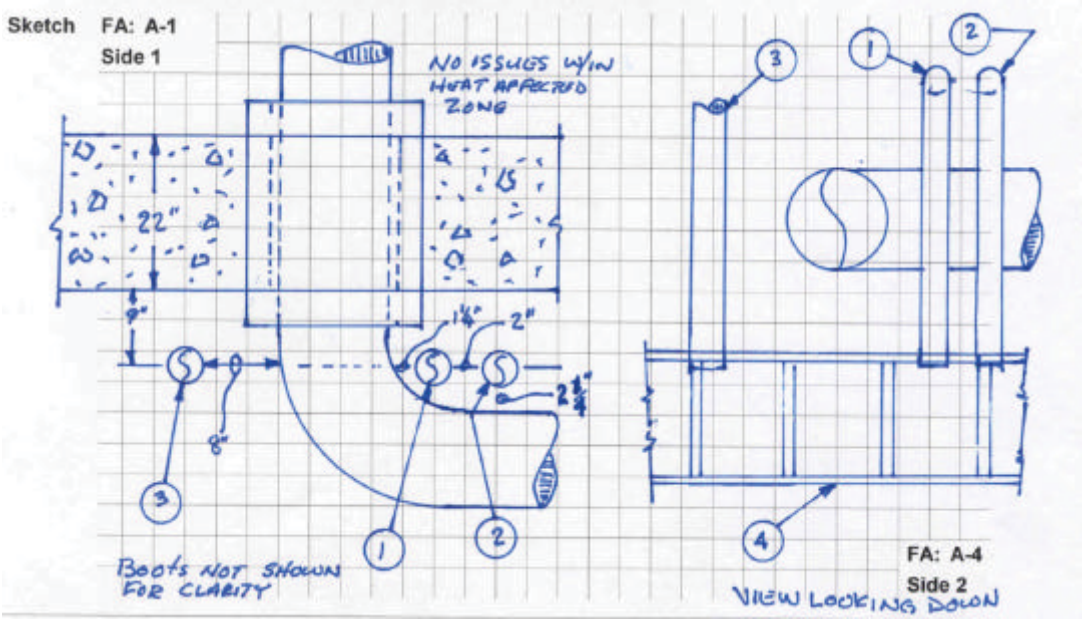

Penetration Seal Data

Appendix: B8

Penetration #: P121S0283

Penetration Type: RB-5A **Fire Area (Side 1):** A-1 **Fire Area (Side 2):** A-4

Loc./Elev.: 1988'-0" **M-0X Dwg:** M-0X1211

1. **Barrier Thickness:** 22"
2. **Opening Size:** 8" D
3. **Penetrants:** (1) 4"P
4. **Sealant Type:** HDSE/HDLE, Ceramic Fiber
5. **Damming Side1:** Boot
6. **Damming Side 2:** Boot
7. **Damming Continuity (Acc/Rej):** N/A
8. **Boot Condition (Acc/Rej):** Accept
9. **Sealant Depth:** Assumed Per Detail
10. **Annular Gap (smallest):** 1-1/2"
11. **Gap between pen:** N/A
12. **Barrier Type:** F R W
13. **Opening Sleeved or Concrete:** Steel
14. **Pipe Insulated:** No

Wayne Aregood

Prepared By:

Jeff Suter

Reviewed By:

Walkdown Comments:

Slab thickness determined from drawing C-0C1211.

Sketch:

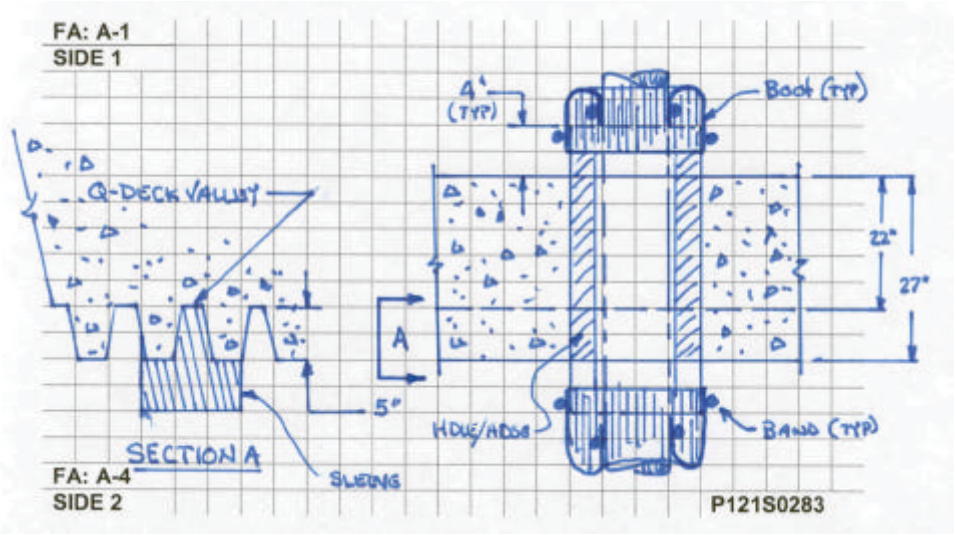

Penetration Seal Data

Appendix: B8

Photos: P121S0283

Fire Area A-1 (Side 1)

Fire Area A-1 (Side 1)

Fire Area A-4 (Side 2)

Fire Area A-4 (Side 2)

Penetration Seal Data

Appendix: B8

Heat Affected Zone Review: P121S0283

Fire Area (Side 1) A-1

No issues within Heat Affected Zone.

Fire Area (Side 2) A-4

No issues within Heat Affected Zone.

Review Distances

(Reference M-663-00017A, Figure 7.2.3-1)

4" Pipe			
L1 & L2 Dist. (ft)	Temp. (°F)	R1 Radius (in)	R2 Radius (in)
0.5	1625	4.2	5.5
1	1374	3	4.4
1.5	1163	2.1	3.4
2	987	1.3	2.6
2.5	839	0.6	2
3	715	0.1	1.4
3.5	610	Contact	0.9
4	523		0.6
4.5	450		0.2
5	389		Contact

Side 1 Photo

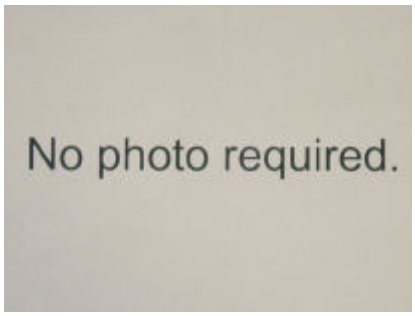

Side 2 Photo

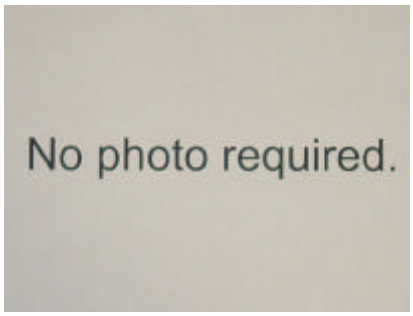

Sketch

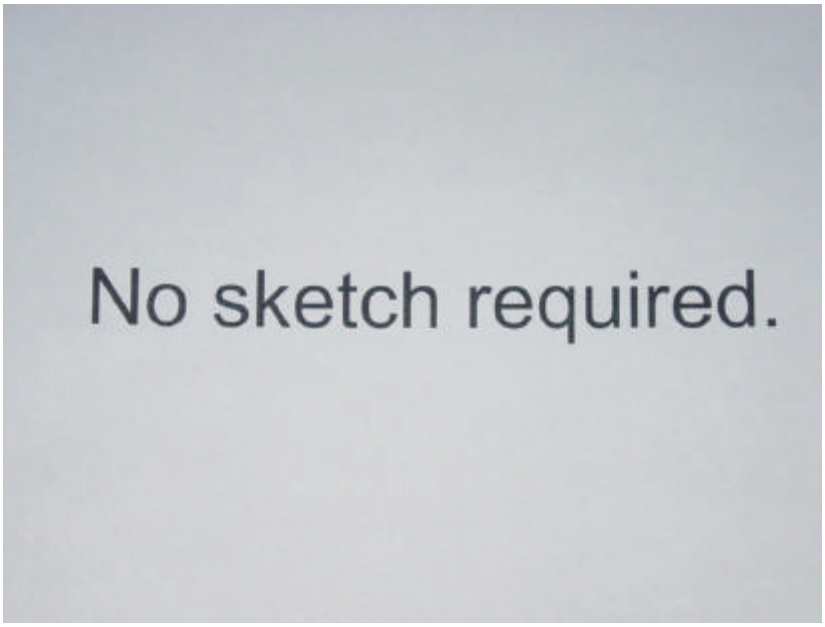

Penetration Seal Data

Appendix: B8

Penetration #: P121W1781

Penetration Type: RB-5A **Fire Area (Side 1):** A-1 **Fire Area (Side 2):** RW-1

Loc./Elev.: 1989'-2 1 **M-0X Dwg:** M-0X1916

1. **Barrier Thickness:** 36"
2. **Opening Size:** 8"D
3. **Penetrants:** (1) 6"P
4. **Sealant Type:** HDSE/HDLE
5. **Damming Side1:** Boot
6. **Damming Side 2:** Boot
7. **Damming Continuity (Acc/Rej):** N/A
8. **Boot Condition (Acc/Rej):** Accept
9. **Sealant Depth:** Assumed Per Detail
10. **Annular Gap (smallest):** 1/2"
11. **Gap between pen:** N/A
12. **Barrier Type:** F R W
13. **Opening Sleeved or Concrete:** Steel
14. **Pipe Insulated:** No

Wayne Aregood
Prepared By:

Jeff Suter
Reviewed By:

Walkdown Comments:

Sketch:

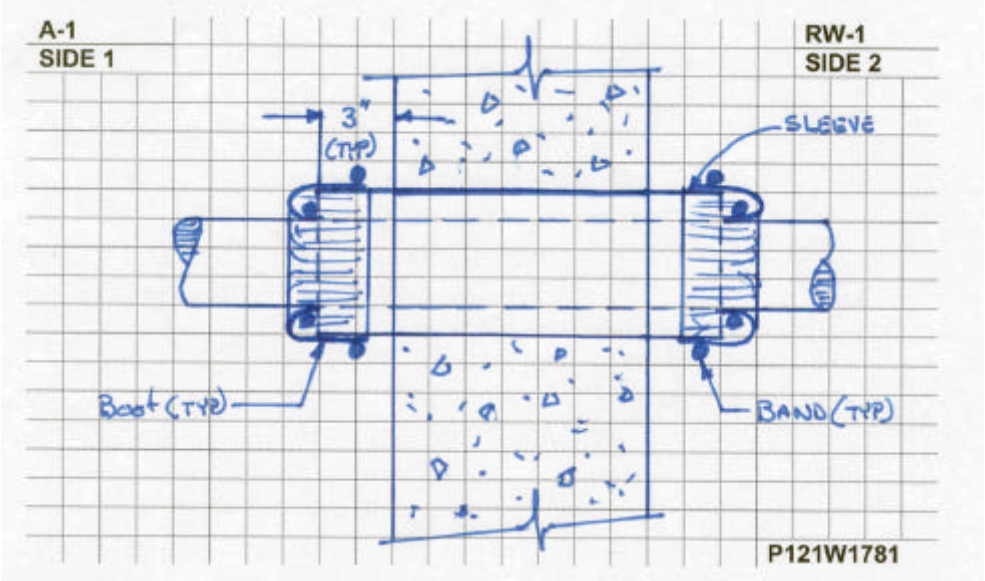

Penetration Seal Data

Appendix: B8

Photos: P121W1781

Fire Area A-1 (Side 1)

Fire Area A-1 (Side 1)

Fire Area RW-1 (Side 2)

Fire Area RW-1 (Side 2)

Penetration Seal Data

Appendix: B8

Heat Affected Zone Review: P121W1781

Fire Area (Side 1) A-1

No issues within Heat Affected Zone

Fire Area (Side 2) RW-1

No Issues within Heat Affected Zone

Review Distances

(Reference M-663-00017A, Figure 7.2.3-1)

6" Pipe			
L1 & L2 Dist. (ft)	Temp. (°F)	R1 Radius (in)	R2 Radius (in)
0.5	1659	4.3	5.7
1	1431	3.3	4.6
1.5	1236	2.4	3.8
2	1069	1.7	3
2.5	925	1	2.4
3	803	0.5	1.8
3.5	698	Contact	1.3
4	608		0.9
4.5	531		0.6
5	464		0.3
5.5	408		0
6	359		Contact

Side 1 Photo

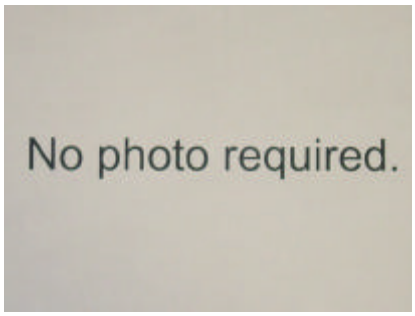

Side 2 Photo

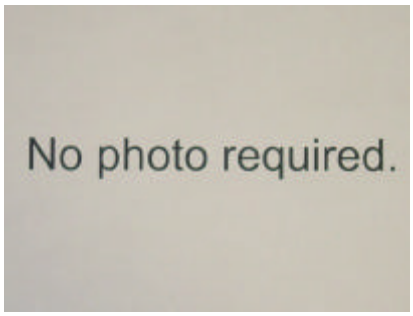

Sketch

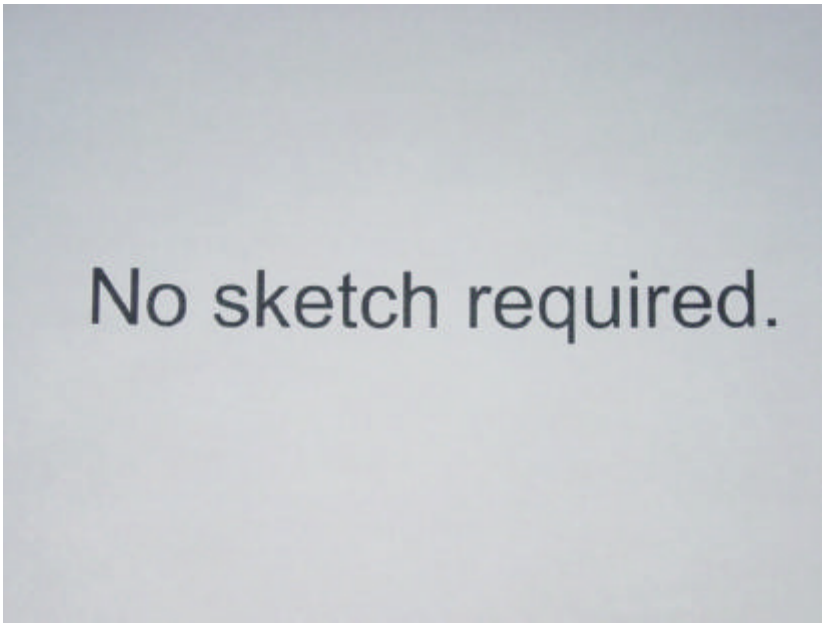

Penetration Seal Data

Appendix: B8

Penetration #: P121W1782

Penetration Type: RB-5A **Fire Area (Side 1):** A-1 **Fire Area (Side 2):** RW-1

Loc./Elev.: 1993'-6" **M-0X Dwg:** M-0X1916

1. **Barrier Thickness:** 36"
2. **Opening Size:** 6"D
3. **Penetrants:** (1) 3"P
4. **Sealant Type:** HDSE/HDLE, Ceramic Fiber
5. **Damming Side1:** Boot
6. **Damming Side 2:** Boot
7. **Damming Continuity (Acc/Rej):** N/A
8. **Boot Condition (Acc/Rej):** Accept
9. **Sealant Depth:** Assumed Per Detail
10. **Annular Gap (smallest):** 1"
11. **Gap between pen:** N/A
12. **Barrier Type:** F R W
13. **Opening Sleeved or Concrete:** Steel
14. **Pipe Insulated:** No

Wayne Aregood
Prepared By:

Jeff Suter
Reviewed By:

Walkdown Comments:

Sketch:

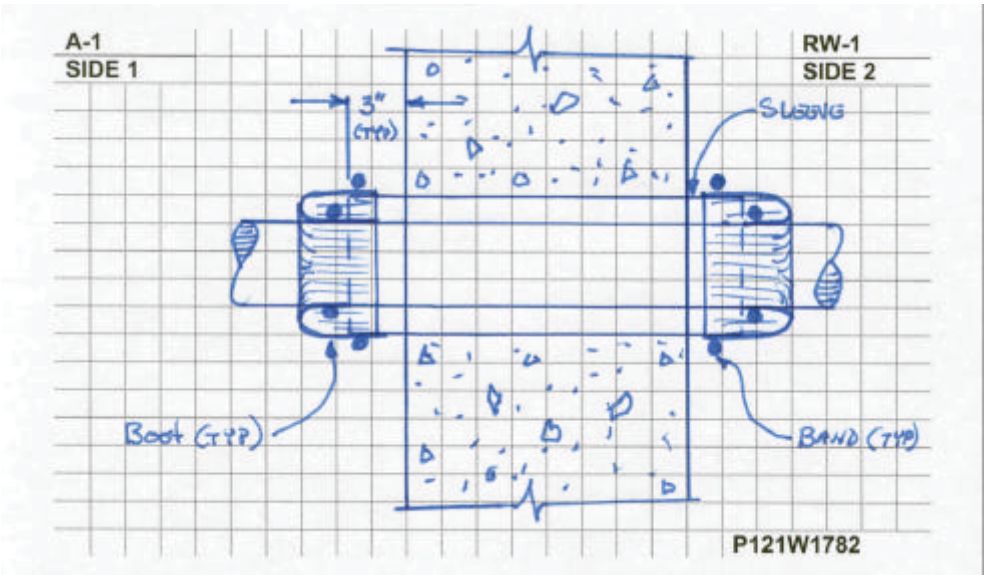

Penetration Seal Data

Appendix: B8

Photos: P121W1782

Fire Area A-1 (Side 1)

Fire Area A-1 (Side 1)

Fire Area RW-1 (Side 2)

Fire Area RW-1 (Side 2)

Penetration Seal Data

Appendix: B8

Heat Affected Zone Review: P121W1782

Fire Area (Side 1) A-1

No issues within Heat Affected Zone

Fire Area (Side 2) RW-1

No issues within Heat Affected Zone

Review Distances

(Reference M-663-00017A, Figure 7.2.3-1)

3" Pipe			
L1 & L2 Dist. (ft)	Temp. (°F)	R1 Radius (in)	R2 Radius (in)
0.5	1607	4.1	5.4
1	1344	2.9	4.3
1.5	1126	1.9	3.3
2	945	1.1	2.5
2.5	795	0.4	1.8
3	671	Contact	1.2
3.5	568		0.8
4	483		0.4
4.5	412		0.1
5	354		Contact

Side 1 Photo

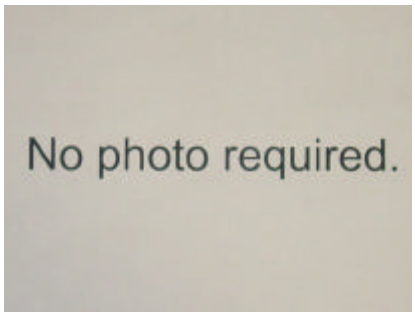

Side 2 Photo

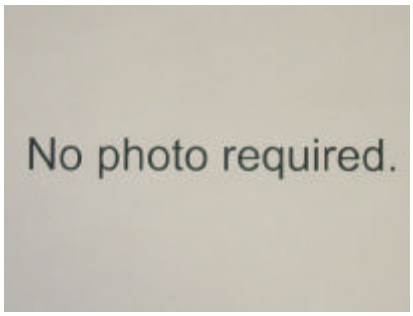

Sketch

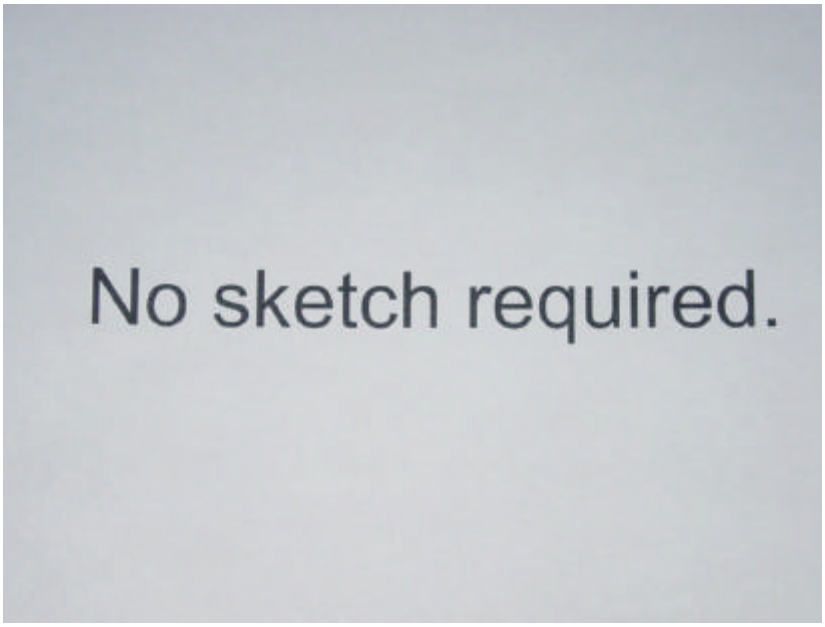

Penetration Seal Data

Appendix: B8

Penetration #: P122S0327

Penetration Type: RB-5A **Fire Area (Side 1):** A-1 **Fire Area (Side 2):** A-2

Loc./Elev.: 1988'-0" **M-0X Dwg:** M-0X1221

1. **Barrier Thickness:** 19"
2. **Opening Size:** 24"D
3. **Penetrants:** (1) 10"P
4. **Sealant Type:** HDSE/HDLE, Ceramic Fiber
5. **Damming Side1:** Boot
6. **Damming Side 2:** Boot
7. **Damming Continuity (Acc/Rej):** N/A
8. **Boot Condition (Acc/Rej):** Accept
9. **Sealant Depth:** Assumed Per Detail
10. **Annular Gap (smallest):** 6"
11. **Gap between pen:** N/A
12. **Barrier Type:** F R W
13. **Opening Sleeved or Concrete:** Steel
14. **Pipe Insulated:** Yes

Wayne Aregood
Prepared By:

Jeff Suter
Reviewed By:

Walkdown Comments:

Slab thickness determined from drawing C-0C1211. Insulation appears to transition through seal material.

Sketch:

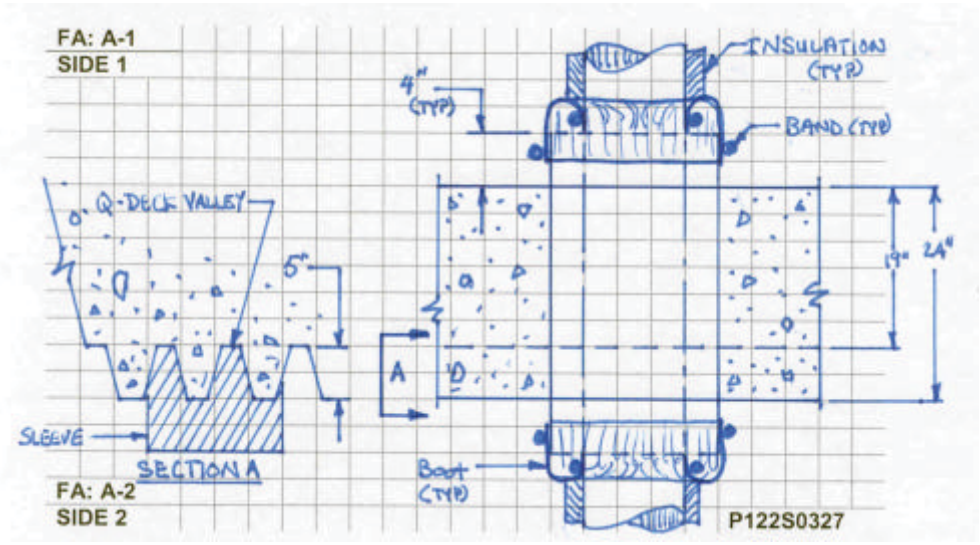

Penetration Seal Data

Appendix: B8

Photos: P122S0327

Fire Area A-1 (Side 1)

Fire Area A-1 (Side 1)

Fire Area A-2 (Side 2)

Fire Area A-2 (Side 2)

Penetration Seal Data

Appendix: B8

Heat Affected Zone Review: P122S0327

Fire Area (Side 1) A-1

No issues within Heat Affected Zone

Fire Area (Side 2) A-2

1. 1-1/2" Cond. 4J1080, not within Heat Affected Zone
2. 1-1/2" Cond. 1UJ1071, not within Heat Affected Zone
3. 1-1/2" Cond. 1U1048, not within Heat Affected Zone

Review Distances

(Reference M-663-00017A, Figure 7.2.3-1)

10" Pipe			
L1 & L2 Dist. (ft)	Temp. (°F)	R1 Radius (in)	R2 Radius (in)
0.5	1697	4.5	5.8
1	1497	3.6	4.9
1.5	1321	2.8	4.1
2	1167	2.1	3.5
2.5	1032	1.5	2.8
3	914	1	2.3
3.5	810	0.5	1.8
4	719	0.1	1.4
4.5	639	Contact	1.1
5	569		0.8
5.5	508		0.5
6	454		0.2
6.5	406		0
7	365		Contact

Side 1 Photo

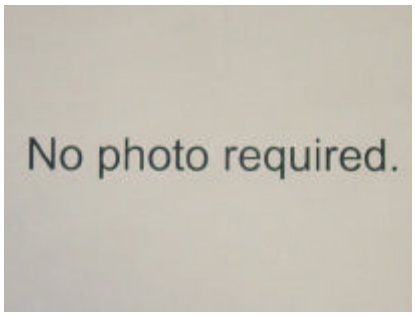

Side 2 Photo

Sketch

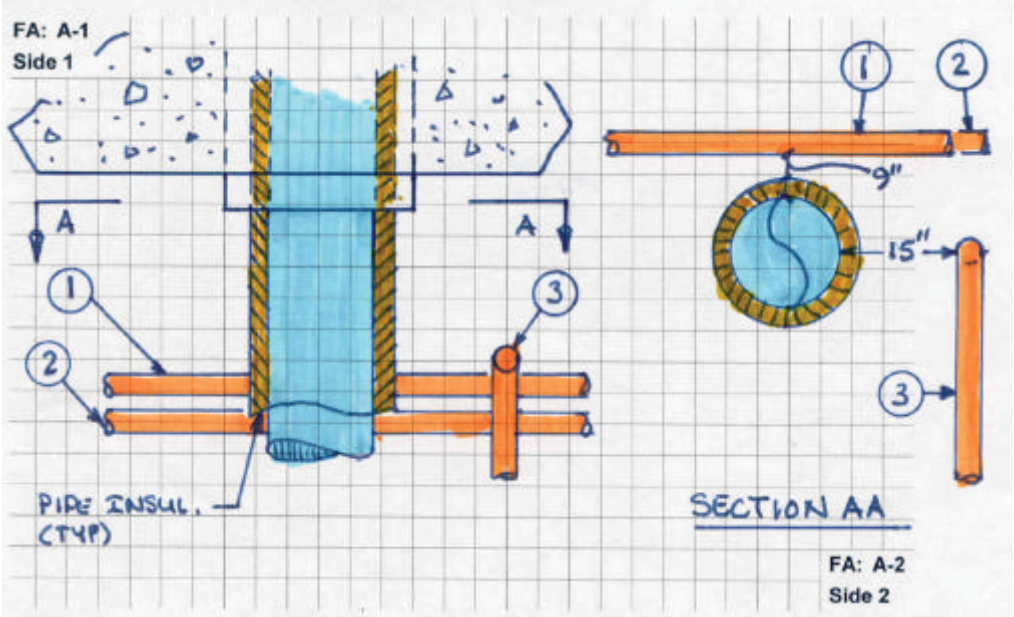

Penetration Seal Data

Appendix: B8

Penetration #: P122S0331

Penetration Type: RB-5A **Fire Area (Side 1):** A-1 **Fire Area (Side 2):** A-2

Loc./Elev.: 1988'-0" **M-0X Dwg:** M-0X1221

1. **Barrier Thickness:** 19"
2. **Opening Size:** 10"D
3. **Penetrants:** (1) 3"P
4. **Sealant Type:** HDSE/HDLE, Ceramic Fiber
5. **Damming Side1:** Boot
6. **Damming Side 2:** Boot
7. **Damming Continuity (Acc/Rej):** N/A
8. **Boot Condition (Acc/Rej):** Accept
9. **Sealant Depth:** Assumed Per Detail
10. **Annular Gap (smallest):** 3"
11. **Gap between pen:** N/A
12. **Barrier Type:** F R W
13. **Opening Sleeved or Concrete:** Steel
14. **Pipe Insulated:** No

Wayne Aregood
Prepared By:

Jeff Suter
Reviewed By:

Walkdown Comments:

Slab thickness determined from drawing C-0C1211.

Sketch:

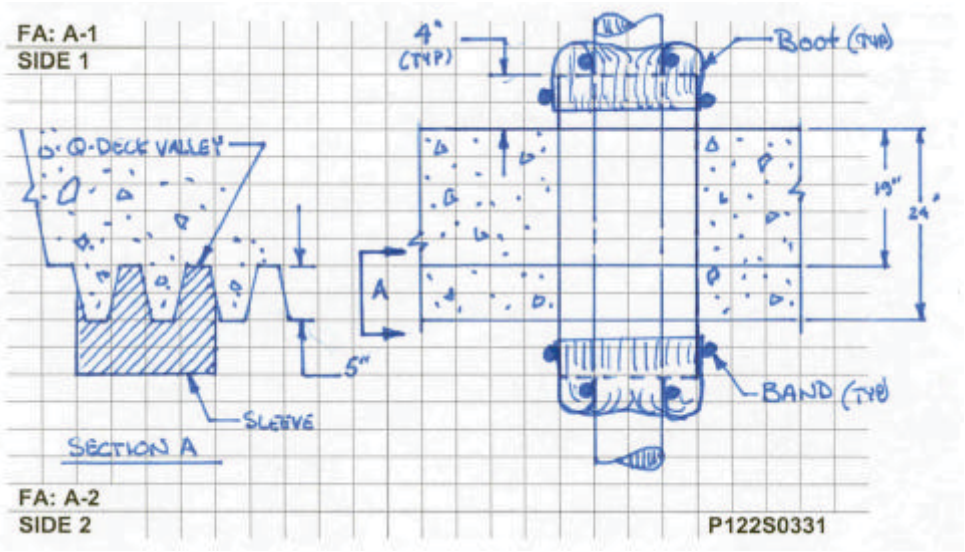

Penetration Seal Data

Appendix: B8

Photos: P122S0331

Fire Area A-1 (Side 1)

Fire Area A-1 (Side 1)

Fire Area A-2 (Side 2)

Fire Area A-2 (Side 2)

Penetration Seal Data

Appendix: B8

Heat Affected Zone Review: P122S0331

Fire Area (Side 1) A-1

No issues within Heat Affected Zone

Fire Area (Side 2) A-2

1. 1J1037, 1/2" Cond.: Not within Heat Affected Zone.
2. 1B2E02, 6" Cable Tray: Not within Heat Affected Zone

Review Distances

(Reference M-663-00017A, Figure 7.2.3-1)

3" Pipe			
L1 & L2 Dist. (ft)	Temp. (°F)	R1 Radius (in)	R2 Radius (in)
0.5	1607	4.1	5.4
1	1344	2.9	4.3
1.5	1126	1.9	3.3
2	945	1.1	2.5
2.5	795	0.4	1.8
3	671	Contact	1.2
3.5	568		0.8
4	483		0.4
4.5	412		0.1
5	354		Contact

Side 1 Photo

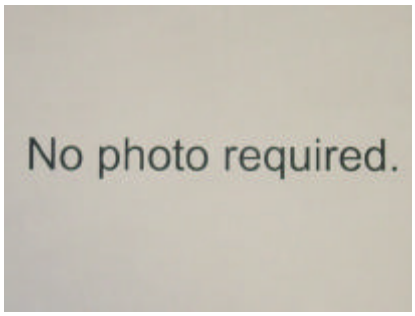

Side 2 Photo

Sketch

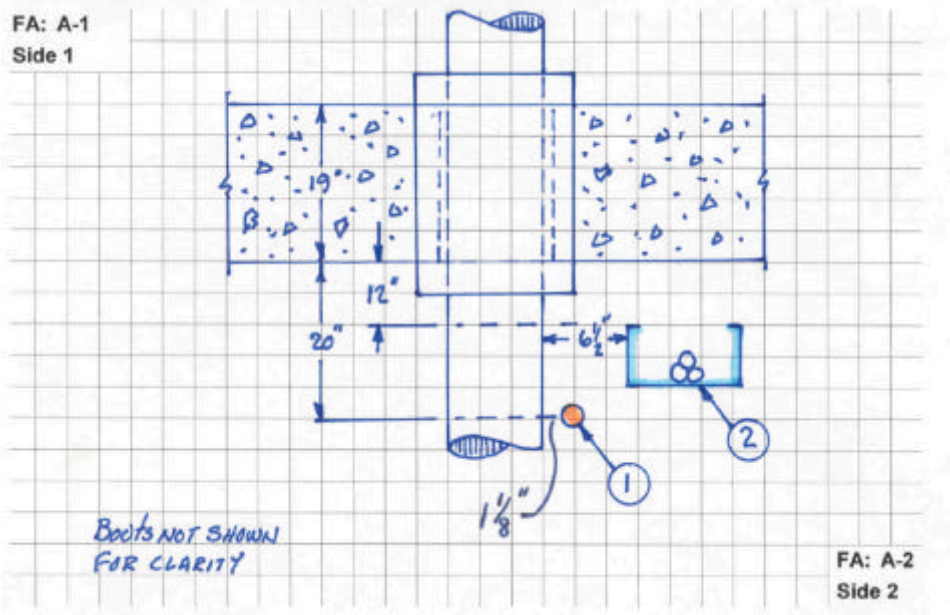

Penetration Seal Data

Appendix: B8

Penetration #: P122S0338

Penetration Type: RB-5A **Fire Area (Side 1):** A-1 **Fire Area (Side 2):** A-2

Loc./Elev.: 1988'-0" **M-0X Dwg:** M-0X1221

1. **Barrier Thickness:** 19"
2. **Opening Size:** 8"D
3. **Penetrants:** (1) 4"P
4. **Sealant Type:** HDSE/HDLE, Ceramic Fiber
5. **Damming Side1:** Boot
6. **Damming Side 2:** Boot
7. **Damming Continuity (Acc/Rej):** N/A
8. **Boot Condition (Acc/Rej):** Accept
9. **Sealant Depth:** Assumed Per Detail
10. **Annular Gap (smallest):** 1-1/2"
11. **Gap between pen:** N/A
12. **Barrier Type:** F R W
13. **Opening Sleeved or Concrete:** Steel
14. **Pipe Insulated:** No

Wayne Aregood
Prepared By:

Jeff Suter
Reviewed By:

Walkdown Comments:

Slab thickness determined from drawing C-0C1211.

Sketch:

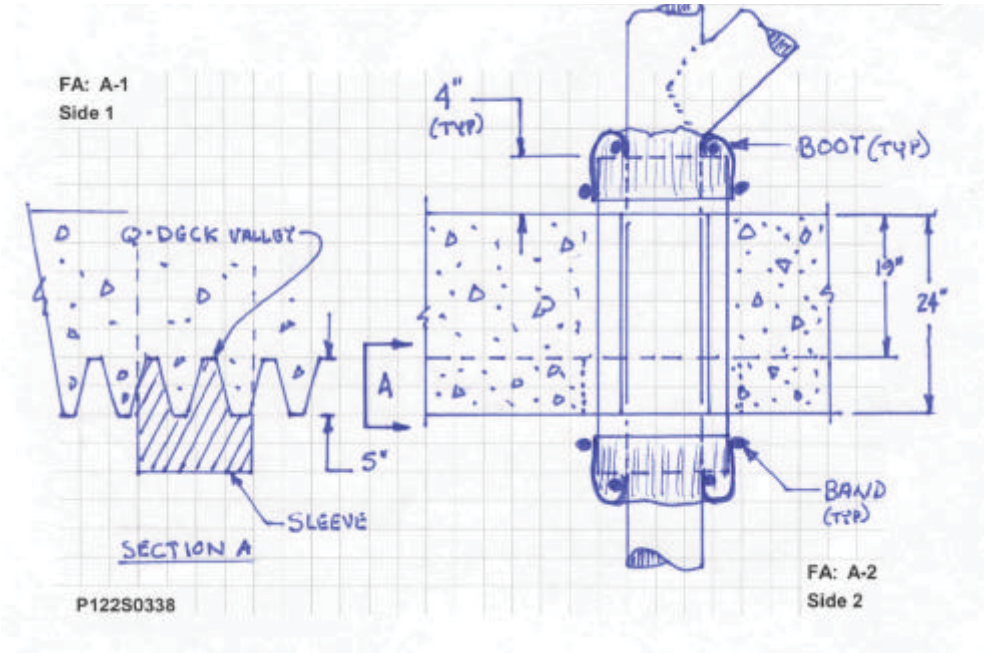

Penetration Seal Data

Appendix: B8

Photos: P122S0338

Fire Area A-1 (Side 1)

Fire Area A-1 (Side 1)

Fire Area A-2 (Side 2)

Fire Area A-2 (Side 2)

Penetration Seal Data

Appendix: B8

Heat Affected Zone Review: P122S0338

Fire Area (Side 1) A-1

No issues within Heat Affected Zone

Fire Area (Side 2) A-2

1. 1/2" Cond, Fire Protection Detection, not within Heat Affected Zone

Review Distances

(Reference M-663-00017A, Figure 7.2.3-1)

4" Pipe			
L1 & L2 Dist. (ft)	Temp. (°F)	R1 Radius (in)	R2 Radius (in)
0.5	1625	4.2	5.5
1	1374	3	4.4
1.5	1163	2.1	3.4
2	987	1.3	2.6
2.5	839	0.6	2
3	715	0.1	1.4
3.5	610	Contact	0.9
4	523		0.6
4.5	450		0.2
5	389		Contact

Side 1 Photo

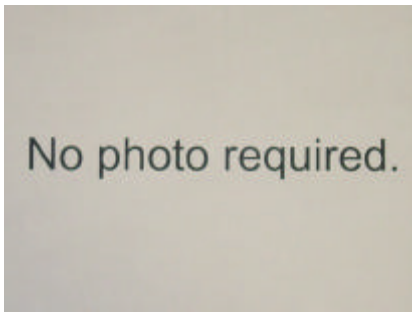

Side 2 Photo

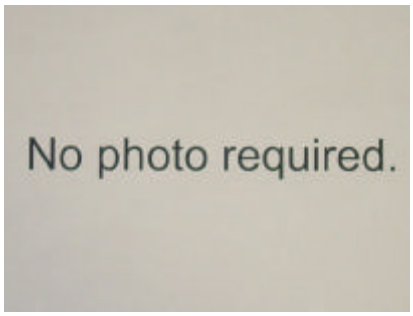

Sketch

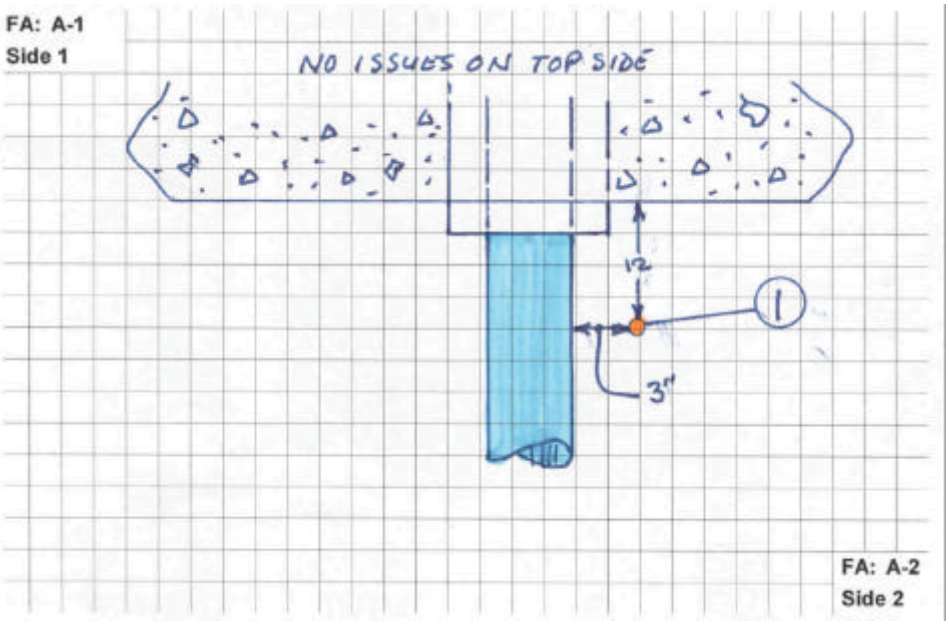

Penetration Seal Data

Appendix: B8

Penetration #: P122S0339

Penetration Type: RB-5A **Fire Area (Side 1):** A-1 **Fire Area (Side 2):** A-2

Loc./Elev.: 1988'-0" **M-0X Dwg:** M-0X1221

1. **Barrier Thickness:** 19"
2. **Opening Size:** 30"D
3. **Penetrants:** (1) 14"P
4. **Sealant Type:** HDSE/HDLE, Ceramic Fiber
5. **Damming Side1:** Boot
6. **Damming Side 2:** Boot
7. **Damming Continuity (Acc/Rej):** N/A
8. **Boot Condition (Acc/Rej):** Accept
9. **Sealant Depth:** Assumed Per Detail
10. **Annular Gap (smallest):** 5"
11. **Gap between pen:** N/A
12. **Barrier Type:** F R W
13. **Opening Sleeved or Concrete:** Steel
14. **Pipe Insulated:** Yes

Wayne Aregood
Prepared By:

Jeff Suter
Reviewed By:

Walkdown Comments:
Slab thickness determined from drawing C-0C1211.

Sketch:

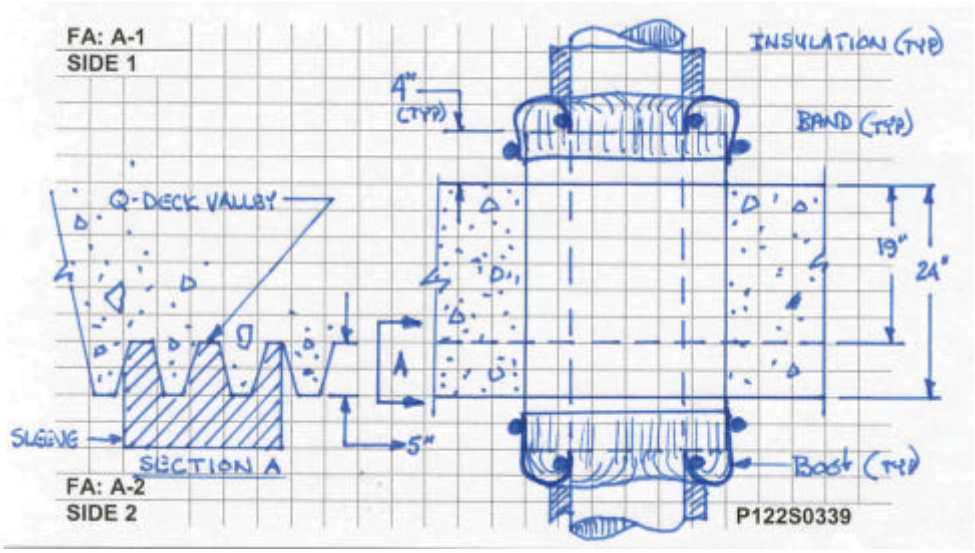

Penetration Seal Data

Appendix: B8

Photos: P122S0339

Fire Area A-1 (Side 1)

Fire Area A-1 (Side 1)

Fire Area A-2 (Side 2)

Fire Area A-2 (Side 2)

Penetration Seal Data

Appendix: B8

Heat Affected Zone Review: P122S0339

Fire Area (Side 1) A-1

No issues within Heat Affected Zone

Fire Area (Side 2) A-2

No issues within Heat Affected Zone

Review Distances

(Reference M-663-00017A, Figure 7.2.3-1)

14" Pipe			
L1 & L2 Dist. (ft)	Temp. (°F)	R1 Radius (in)	R2 Radius (in)
0.5	1721	4.6	5.9
1	1539	3.8	5.1
1.5	1377	3	4.4
2	1233	2.4	3.8
2.5	1105	1.8	3.2
3	991	1.3	2.7
3.5	889	0.9	2.2
4	799	0.4	1.8
4.5	719	0.1	1.4
5	647	Contact	1.1
5.5	583		0.8
6	527		0.6
6.5	477		0.3
7	432		0.1
7.5	392		Contact

Side 1 Photo

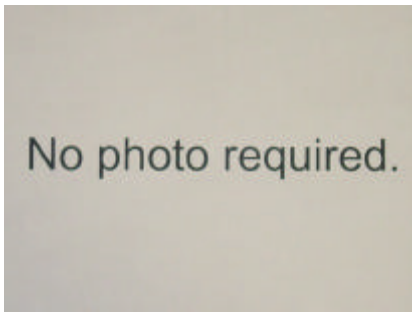

Side 2 Photo

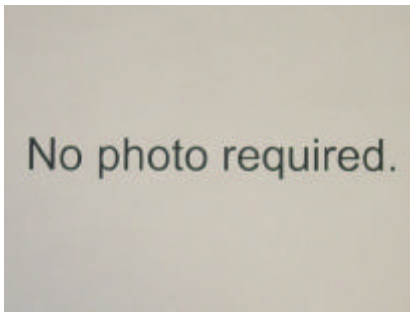

Sketch

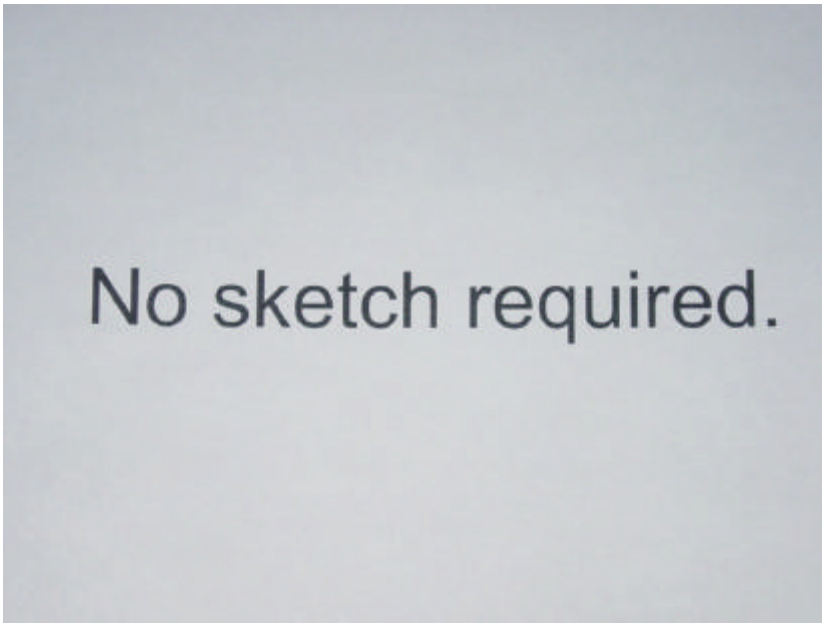

Penetration Seal Data

Appendix: B8

Penetration #: P122S0340

Penetration Type: RB-5A **Fire Area (Side 1):** A-1 **Fire Area (Side 2):** A-2

Loc./Elev.: 1988'-0" **M-0X Dwg:** M-0X1221

1. **Barrier Thickness:** 19"
2. **Opening Size:** 22"D
3. **Penetrants:** (1) 14"P
4. **Sealant Type:** HDSE/HDLE, Ceramic Fiber
5. **Damming Side1:** Boot
6. **Damming Side 2:** Boot
7. **Damming Continuity (Acc/Rej):** N/A
8. **Boot Condition (Acc/Rej):** Accept
9. **Sealant Depth:** Assumed Per Detail
10. **Annular Gap (smallest):** 2"
11. **Gap between pen:** N/A
12. **Barrier Type:** F R W
13. **Opening Sleeved or Concrete:** Steel
14. **Pipe Insulated:** No

Wayne Aregood
Prepared By:

Jeff Suter
Reviewed By:

Walkdown Comments:

Slab thickness determined from drawing C-0C1211.

Sketch:

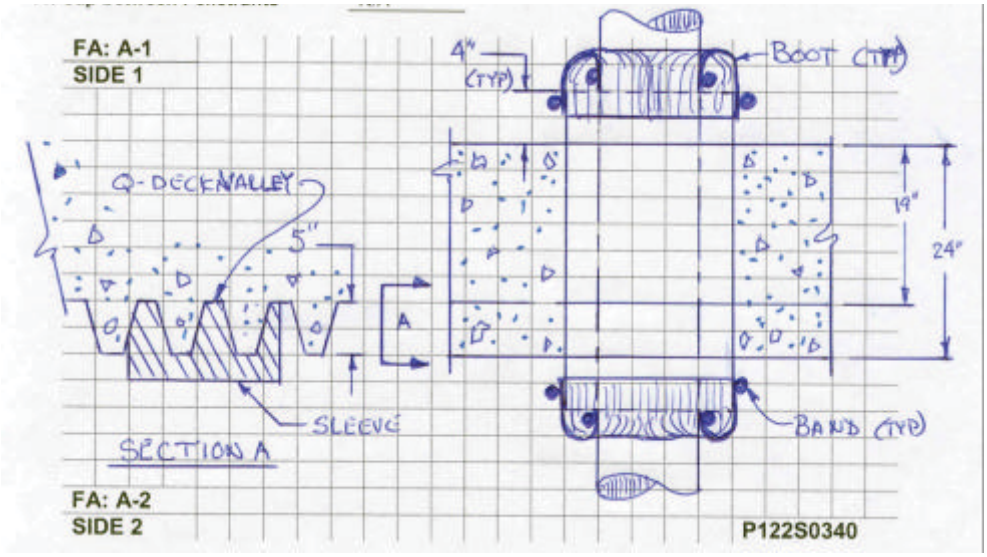

Penetration Seal Data

Appendix: B8

Photos: P122S0340

Fire Area A-1 (Side 1)

Fire Area A-1 (Side 1)

Fire Area A-2 (Side 2)

Fire Area A-2 (Side 2)

Penetration Seal Data

Appendix: B8

Heat Affected Zone Review: P122S0340

Fire Area (Side 1) A-1

No issues within Heat Affected Zone

Fire Area (Side 2) A-2

1. 1-1/2" Cond 1U3C1K, not within Heat Affected Zone

Review Distances

(Reference M-663-00017A, Figure 7.2.3-1)

14" Pipe			
L1 & L2 Dist. (ft)	Temp. (°F)	R1 Radius (in)	R2 Radius (in)
0.5	1721	4.6	5.9
1	1539	3.8	5.1
1.5	1377	3	4.4
2	1233	2.4	3.8
2.5	1105	1.8	3.2
3	991	1.3	2.7
3.5	889	0.9	2.2
4	799	0.4	1.8
4.5	719	0.1	1.4
5	647	Contact	1.1
5.5	583		0.8
6	527		0.6
6.5	477		0.3
7	432		0.1
7.5	392		Contact

Side 1 Photo

No photo required.

Side 2 Photo

No photo required.

Sketch

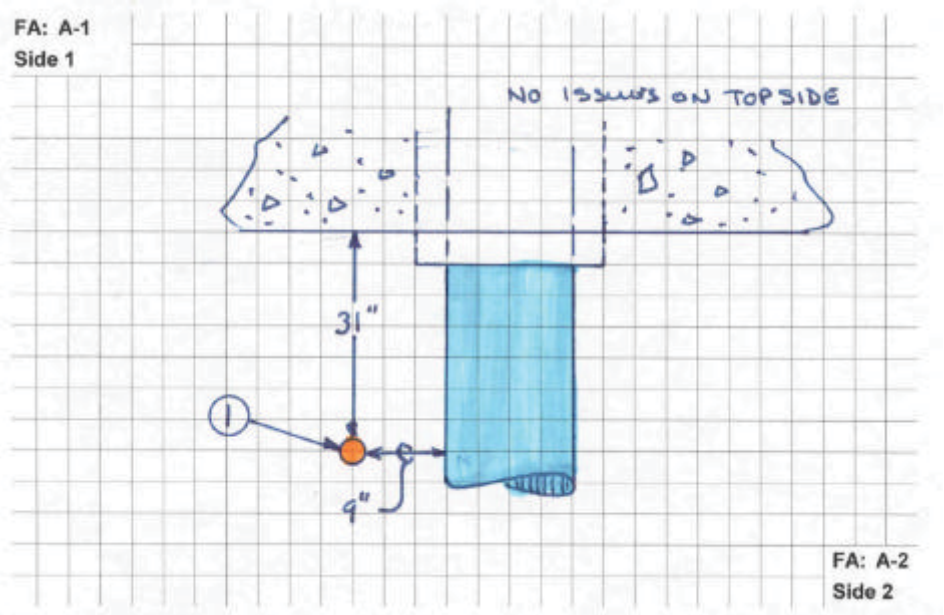

Penetration Seal Data

Appendix: B8

Penetration #: P122S0349

Penetration Type: RB-5A **Fire Area (Side 1):** A-1 **Fire Area (Side 2):** A-2

Loc./Elev.: 1988'-0" **M-0X Dwg:** M-0X1221

1. **Barrier Thickness:** 19"
2. **Opening Size:** 20"D
3. **Penetrants:** (1) 12"P
4. **Sealant Type:** HDSE/HDLE, Ceramic Fiber
5. **Damming Side1:** Boot
6. **Damming Side 2:** Boot
7. **Damming Continuity (Acc/Rej):** N/A
8. **Boot Condition (Acc/Rej):** Accept
9. **Sealant Depth:** Assumed Per Detail
10. **Annular Gap (smallest):** 3"
11. **Gap between pen:** N/A
12. **Barrier Type:** F R W
13. **Opening Sleeved or Concrete:** Steel
14. **Pipe Insulated:** No

Wayne Aregood
Prepared By:

Jeff Suter
Reviewed By:

Walkdown Comments:

Slab thickness determined from drawing C-0C1211.

Sketch:

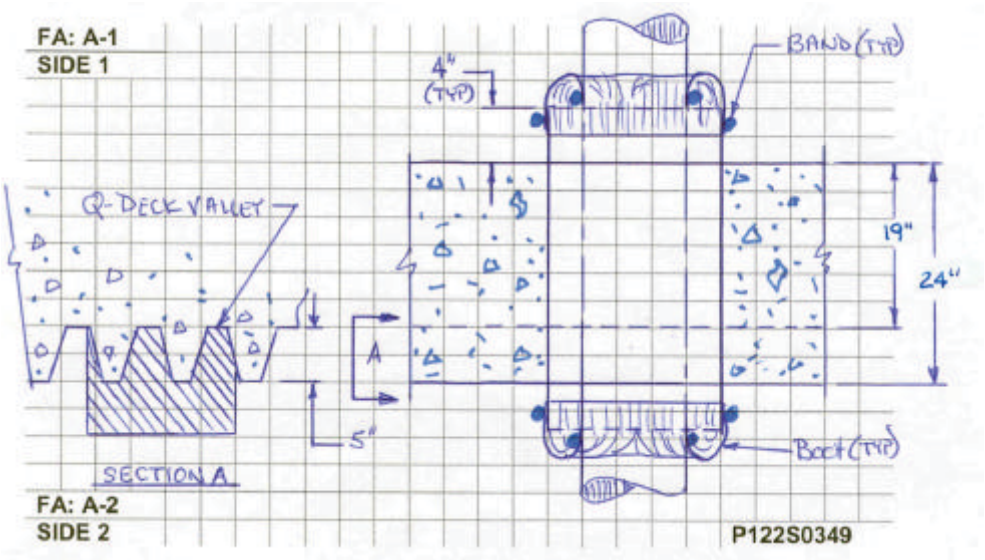

Penetration Seal Data

Appendix: B8

Photos: P122S0349

Fire Area A-1 (Side 1)

Fire Area A-1 (Side 1)

Fire Area A-2 (Side 2)

Fire Area A-2 (Side 2)

Penetration Seal Data

Appendix: B8

Heat Affected Zone Review: P122S0349

Fire Area (Side 1) A-1

No issues within Heat Affected Zone

Fire Area (Side 2) A-2

1. 1U3C07, 12" Cable Tray: Portions of the Cable Tray is within the Heat Affected Zone, further review determined that this Cable Tray is Not PFSSD. Set-route control is necessary
2. 1U3C1R, 2" Cond.: Not within Heat Affected Zone

Review Distances

(Reference M-663-00017A, Figure 7.2.3-1)

12" Pipe			
L1 & L2 Dist. (ft)	Temp. (°F)	R1 Radius (in)	R2 Radius (in)
0.5	1712	4.6	5.9
1	1524	3.7	5.1
1.5	1357	3	4.3
2	1209	2.3	3.6
2.5	1078	1.7	3.1
3	962	1.2	2.5
3.5	860	0.7	2.1
4	769	0.3	1.7
4.5	689	Contact	1.3
5	618		1
5.5	555		0.7
6	499		0.4
6.5	450		0.2
7	406		0
7.5	368		Contact

Side 1 Photo

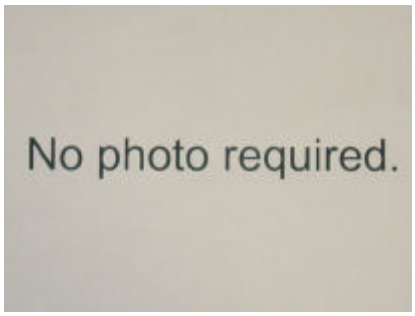

Side 2 Photo

Sketch

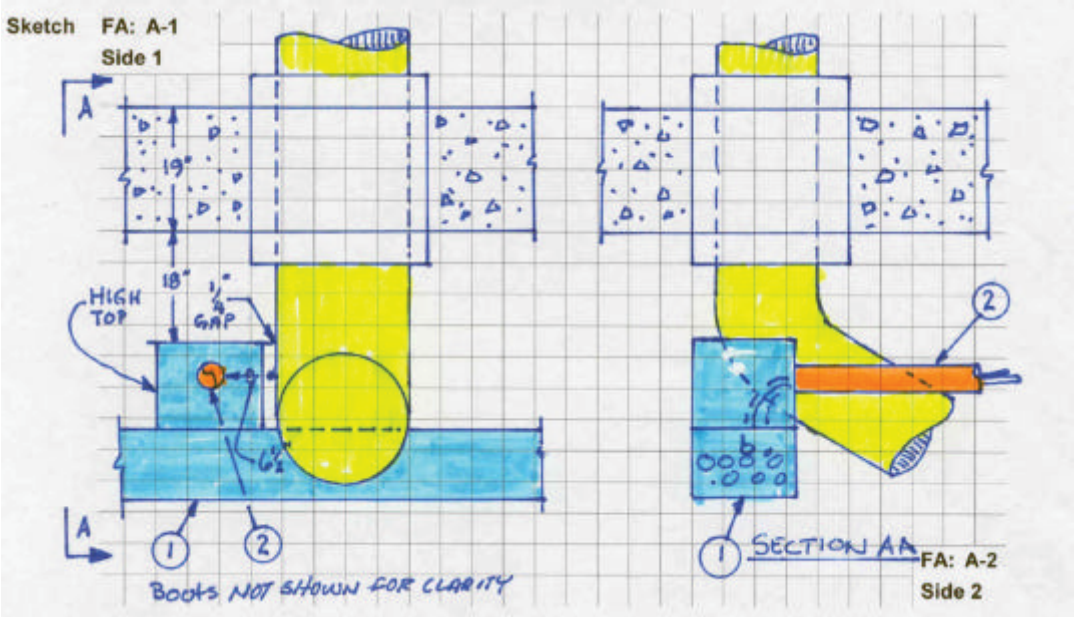

Penetration Seal Data

Appendix: B8

Penetration #: P122S0350

Penetration Type: RB-5A **Fire Area (Side 1):** A-1 **Fire Area (Side 2):** A-2

Loc./Elev.: 1988'-0" **M-0X Dwg:** M-0X1221

1. **Barrier Thickness:** 19"
2. **Opening Size:** 12"D
3. **Penetrants:** (1) 4"P
4. **Sealant Type:** HDSE/HDLE, Ceramic Fiber
5. **Damming Side1:** Boot
6. **Damming Side 2:** Boot
7. **Damming Continuity (Acc/Rej):** N/A
8. **Boot Condition (Acc/Rej):** Accept
9. **Sealant Depth:** Assumed Per Detail
10. **Annular Gap (smallest):** 2-1/2"
11. **Gap between pen:** N/A
12. **Barrier Type:** F R W
13. **Opening Sleeved or Concrete:** Steel
14. **Pipe Insulated:** No

Wayne Aregood
Prepared By:

Jeff Suter
Reviewed By:

Walkdown Comments:

Slab thickness determined from drawing C-0C1211.

Sketch:

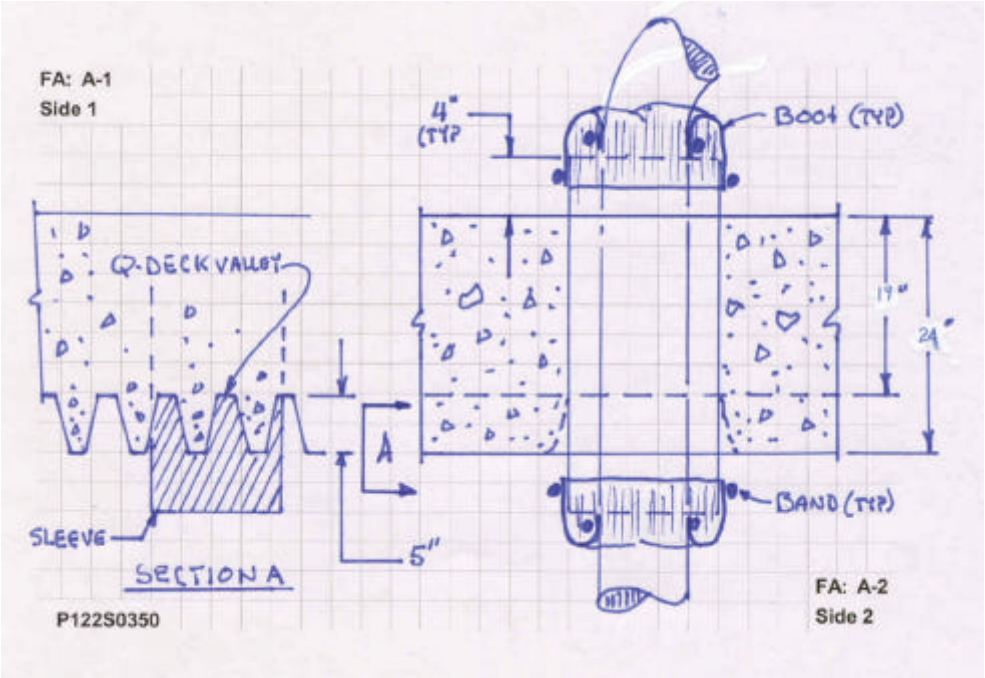

Penetration Seal Data

Appendix: B8

Photos: P122S0350

Fire Area A-1 (Side 1)

Fire Area A-1 (Side 1)

Fire Area A-2 (Side 2)

Fire Area A-2 (Side 2)

Penetration Seal Data

Appendix: B8

Heat Affected Zone Review: P122S0350

Fire Area (Side 1) A-1

No issues within Heat Affected Zone

Fire Area (Side 2) A-2

No issues within Heat Affected Zone

Review Distances

(Reference M-663-00017A, Figure 7.2.3-1)

4" Pipe			
L1 & L2 Dist. (ft)	Temp. (°F)	R1 Radius (in)	R2 Radius (in)
0.5	1625	4.2	5.5
1	1374	3	4.4
1.5	1163	2.1	3.4
2	987	1.3	2.6
2.5	839	0.6	2
3	715	0.1	1.4
3.5	610	Contact	0.9
4	523		0.6
4.5	450		0.2
5	389		Contact

Side 1 Photo

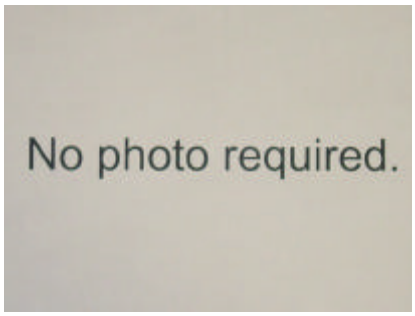

Side 2 Photo

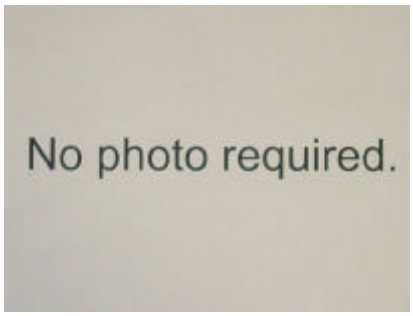

Sketch

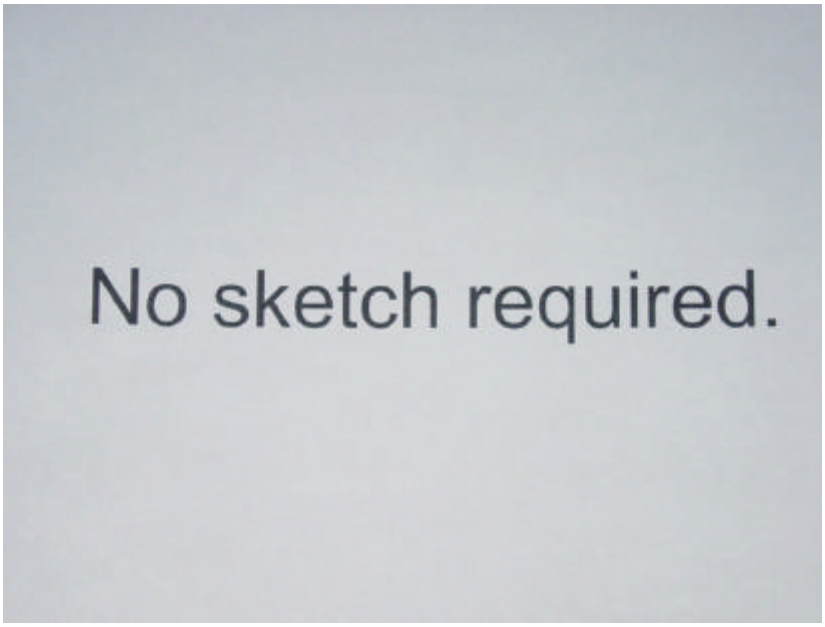

Penetration Seal Data

Appendix: B8

Penetration #: P122S0351

Penetration Type: RB-5A **Fire Area (Side 1):** A-1 **Fire Area (Side 2):** A-2

Loc./Elev.: 1988'-0" **M-0X Dwg:** M-0X1221

1. **Barrier Thickness:** 19"
2. **Opening Size:** 12"D
3. **Penetrants:** (1) 4"P
4. **Sealant Type:** HDSE/HDLE, Ceramic Fiber
5. **Damming Side1:** Boot
6. **Damming Side 2:** Boot
7. **Damming Continuity (Acc/Rej):** N/A
8. **Boot Condition (Acc/Rej):** Accept
9. **Sealant Depth:** Assumed Per Detail
10. **Annular Gap (smallest):** 4"
11. **Gap between pen:** N/A
12. **Barrier Type:** F R W
13. **Opening Sleeved or Concrete:** Steel
14. **Pipe Insulated:** No

Wayne Aregood
Prepared By:

Jeff Suter
Reviewed By:

Walkdown Comments:

Slab thickness determined from drawing C-0C1211.

Sketch:

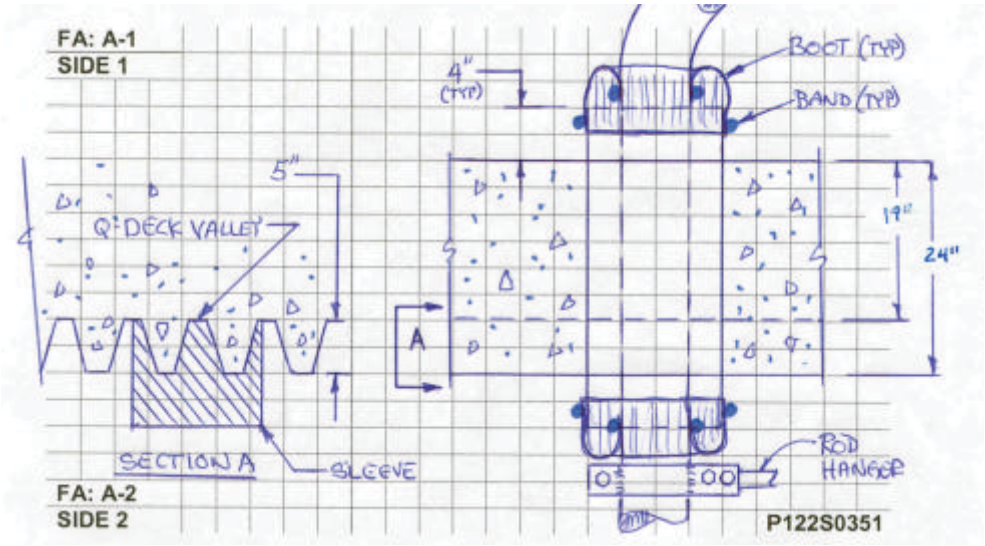

Penetration Seal Data

Appendix: B8

Photos: P122S0351

Fire Area A-1 (Side 1)

Fire Area A-1 (Side 1)

Fire Area A-2 (Side 2)

Fire Area A-2 (Side 2)

Penetration Seal Data

Appendix: B8

Heat Affected Zone Review: P122S0351

Fire Area (Side 1) A-1

No Issues within Heat Affected Zone

Fire Area (Side 2) A-2

1. 1U3C1C, 1-1/2" Cond.: Not within Heat Affected Zone
2. 1U3C1D, 1-1/2" Cond.: Not within Heat Affected Zone
3. 1U3C1P, 1-1/2" Cond.: Not within Heat Affected Zone
4. 1U3C1N, 1-1/2" Cond.: Not within Heat Affected Zone

Review Distances

(Reference M-663-00017A, Figure 7.2.3-1)

4" Pipe			
L1 & L2 Dist. (ft)	Temp. (°F)	R1 Radius (in)	R2 Radius (in)
0.5	1625	4.2	5.5
1	1374	3	4.4
1.5	1163	2.1	3.4
2	987	1.3	2.6
2.5	839	0.6	2
3	715	0.1	1.4
3.5	610	Contact	0.9
4	523		0.6
4.5	450		0.2
5	389		Contact

Side 1 Photo

Side 2 Photo

Sketch

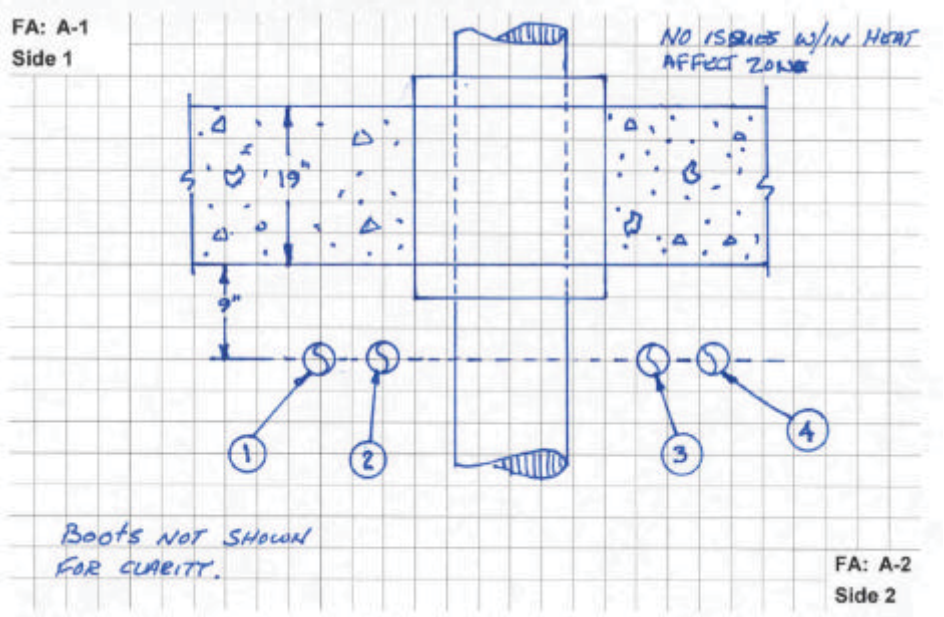

Penetration Seal Data

Appendix: B8

Penetration #: P122S0357

Penetration Type: RB-5A **Fire Area (Side 1):** A-1 **Fire Area (Side 2):** A-2

Loc./Elev.: 1988'-0" **M-0X Dwg:** M-0X1221

1. **Barrier Thickness:** 19"
2. **Opening Size:** 16"D
3. **Penetrants:** (1) 8"P
4. **Sealant Type:** HDSE/HDLE, Ceramic Fiber
5. **Damming Side1:** Boot
6. **Damming Side 2:** Boot
7. **Damming Continuity (Acc/Rej):** N/A
8. **Boot Condition (Acc/Rej):** Accept
9. **Sealant Depth:** Assumed Per Detail
10. **Annular Gap (smallest):** 1"
11. **Gap between pen:** N/A
12. **Barrier Type:** F R W
13. **Opening Sleeved or Concrete:** Steel
14. **Pipe Insulated:** No

Wayne Aregood
Prepared By:

Jeff Suter
Reviewed By:

Walkdown Comments:

Slab thickness determined from drawing C-0C1211.

Sketch:

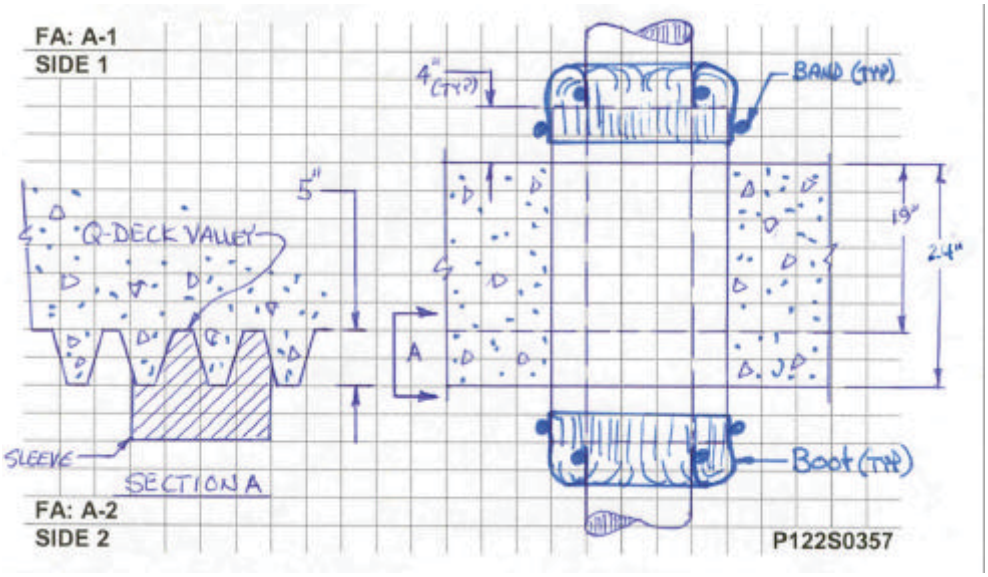

Penetration Seal Data

Appendix: B8

Photos: P122S0357

Fire Area A-1 (Side 1)

Fire Area A-1 (Side 1)

Fire Area A-2 (Side 2)

Fire Area A-2 (Side 2)

Penetration Seal Data

Appendix: B8

Heat Affected Zone Review: P122S0357

Fire Area (Side 1) A-1

No issues within Heat Affected Zone

Fire Area (Side 2) A-2

1. 1/2" Detection Cond., not an issue or within HAZ

Review Distances

(Reference M-663-00017A, Figure 7.2.3-1)

8" Pipe			
L1 & L2 Dist. (ft)	Temp. (°F)	R1 Radius (in)	R2 Radius (in)
0.5	1677	4.4	5.8
1	1463	3.4	4.8
1.5	1277	2.6	3.9
2	1116	1.9	3.2
2.5	976	1.2	2.6
3	855	0.7	2
3.5	750	0.2	1.6
4	659	Contact	1.2
4.5	581		0.8
5	512		0.5
5.5	453		0.2
6	402		0
6.5	358		Contact

Side 1 Photo

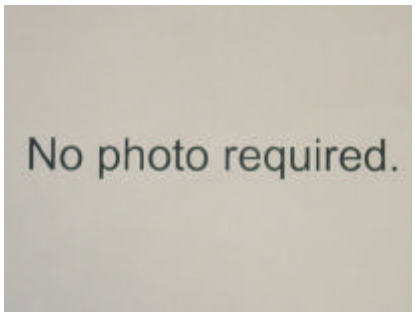

Side 2 Photo

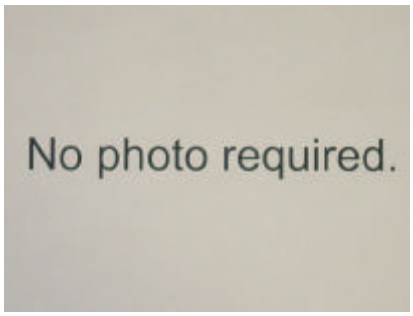

Sketch

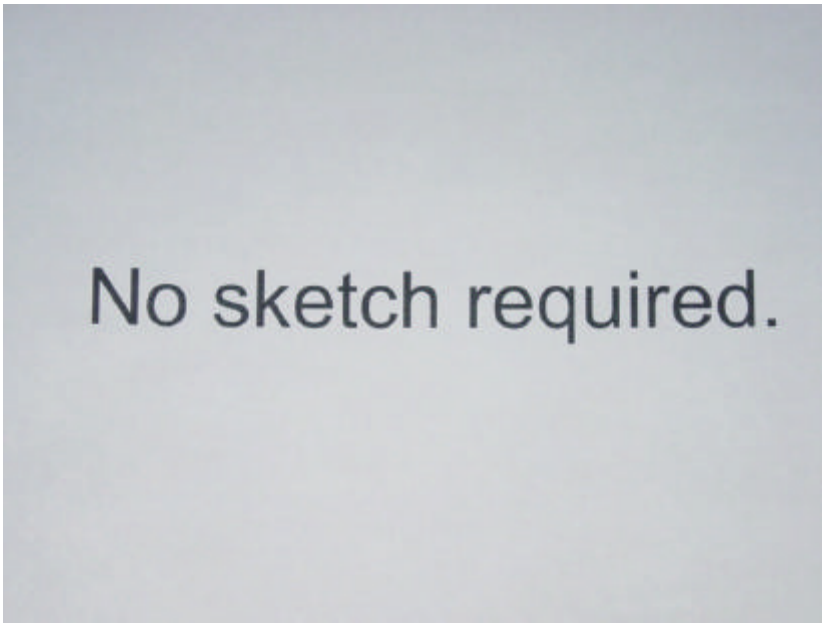

Penetration Seal Data

Appendix: B8

Penetration #: P122S0367

Penetration Type: RB-5A **Fire Area (Side 1):** A-1 **Fire Area (Side 2):** A-2

Loc./Elev.: 1988'-0" **M-0X Dwg:** M-0X1221

1. **Barrier Thickness:** 25"
2. **Opening Size:** 16"D
3. **Penetrants:** (1) 8"P
4. **Sealant Type:** HDSE/HDLE, Ceramic Fiber
5. **Damming Side1:** Boot
6. **Damming Side 2:** Boot
7. **Damming Continuity (Acc/Rej):** N/A
8. **Boot Condition (Acc/Rej):** Accept
9. **Sealant Depth:** Assumed Per Detail
10. **Annular Gap (smallest):** 2"
11. **Gap between pen:** N/A
12. **Barrier Type:** F R W
13. **Opening Sleeved or Concrete:** Steel
14. **Pipe Insulated:** No

Wayne Aregood
Prepared By:

Jeff Suter
Reviewed By:

Walkdown Comments:
Slab thickness determined from drawing C-0C1211.

Sketch:

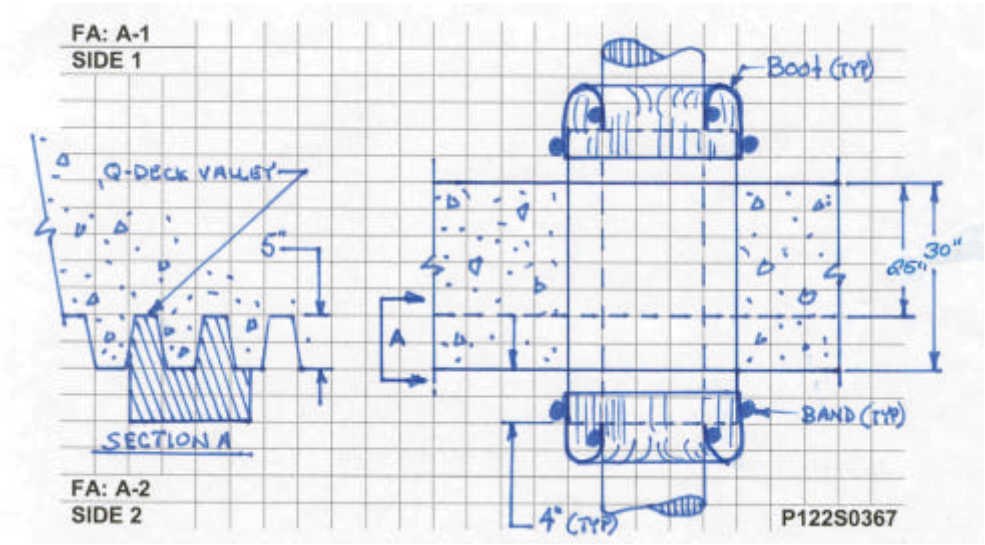

Penetration Seal Data

Appendix: B8

Photos: P122S0367

Fire Area A-1 (Side 1)

Fire Area A-1 (Side 1)

Fire Area A-2 (Side 2)

Fire Area A-2 (Side 2)

Penetration Seal Data

Appendix: B8

Heat Affected Zone Review: P122S0367

Fire Area (Side 1) A-1

No issues within Heat Affected Zone

Fire Area (Side 2) A-2

No issues within Heat Affected Zone

Review Distances

(Reference M-663-00017A, Figure 7.2.3-1)

8" Pipe			
L1 & L2 Dist. (ft)	Temp. (°F)	R1 Radius (in)	R2 Radius (in)
0.5	1677	4.4	5.8
1	1463	3.4	4.8
1.5	1277	2.6	3.9
2	1116	1.9	3.2
2.5	976	1.2	2.6
3	855	0.7	2
3.5	750	0.2	1.6
4	659	Contact	1.2
4.5	581		0.8
5	512		0.5
5.5	453		0.2
6	402		0
6.5	358		Contact

Side 1 Photo

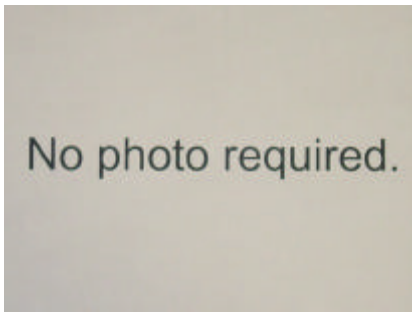

Side 2 Photo

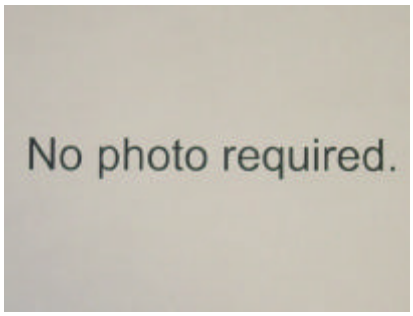

Sketch

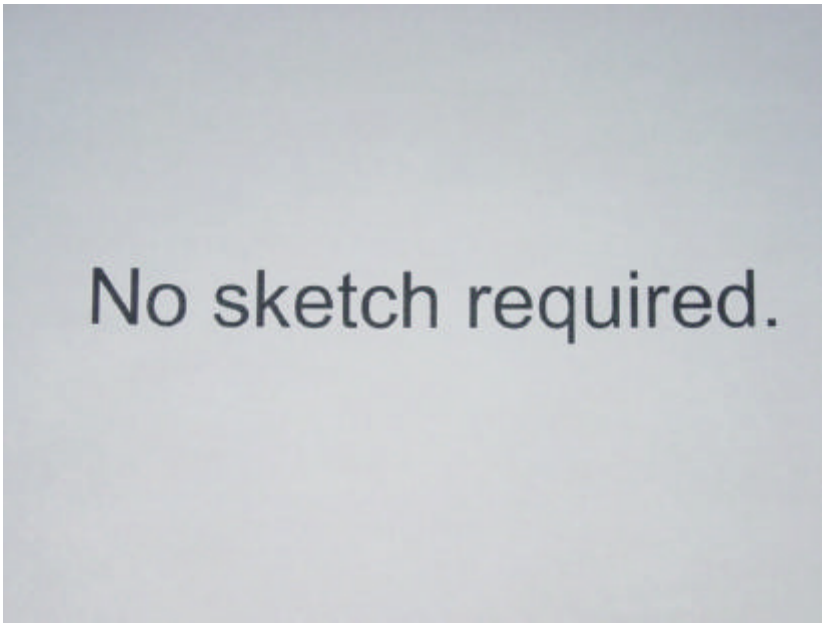

Penetration Seal Data

Appendix: B8

Penetration #: P122S0373

Penetration Type: RB-5A **Fire Area (Side 1):** A-1 **Fire Area (Side 2):** A-2

Loc./Elev.: 1988'-0" **M-0X Dwg:** M-0X1221

1. **Barrier Thickness:** 19"
2. **Opening Size:** 10"D
3. **Penetrants:** (1) 4"P
4. **Sealant Type:** HDSE/HDLE, Ceramic Fiber
5. **Damming Side1:** Boot
6. **Damming Side 2:** Boot
7. **Damming Continuity (Acc/Rej):** N/A
8. **Boot Condition (Acc/Rej):** Accept
9. **Sealant Depth:** Assumed Per Detail
10. **Annular Gap (smallest):** 2"
11. **Gap between pen:** N/A
12. **Barrier Type:** F R W
13. **Opening Sleeved or Concrete:** Steel
14. **Pipe Insulated:** No

Wayne Aregood
Prepared By:

Jeff Suter
Reviewed By:

Walkdown Comments:

Slab thickness determined from drawing C-0C1211.

Sketch:

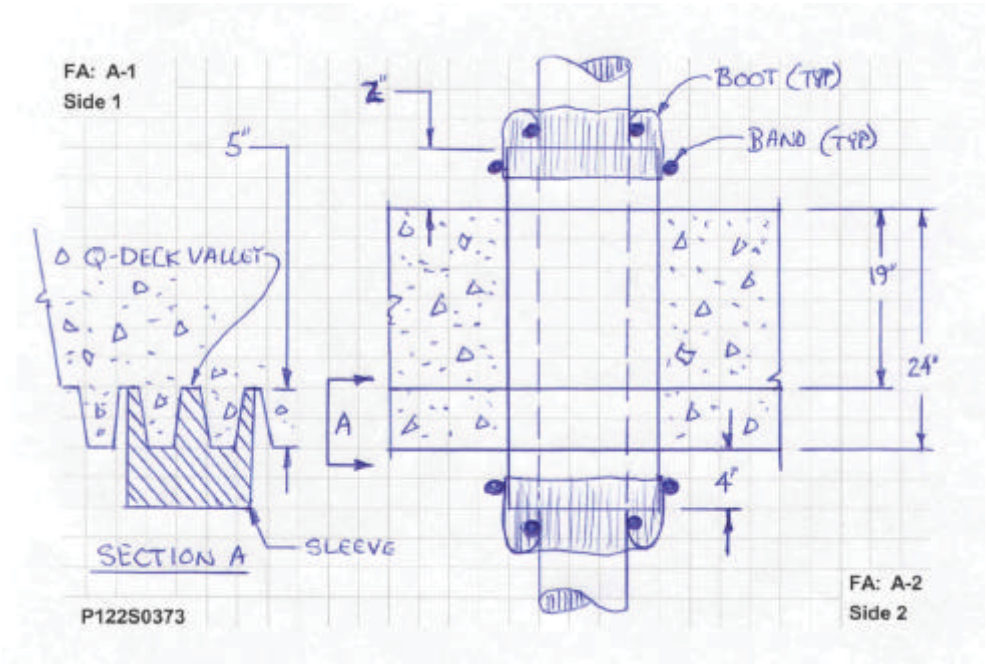

Penetration Seal Data

Appendix: B8

Photos: P122S0373

Fire Area A-1 (Side 1)

Fire Area A-1 (Side 1)

Fire Area A-2 (Side 2)

Fire Area A-2 (Side 2)

Penetration Seal Data

Appendix: B8

Heat Affected Zone Review: P122S0373

Fire Area (Side 1) A-1

No issues within Heat Affected Zone

Fire Area (Side 2) A-2

1. 1J1037, 1/2" Cond.: No issues within Heat Affected Zone
2. 1U1363, 1" Cond.: No issues within Heat Affected Zone
3. 1U1318, 1/2" Cond.: No issues within Heat Affected Zone
4. 1J1039, 1/2" Cond.: No issues within Heat Affected Zone

Review Distances

(Reference M-663-00017A, Figure 7.2.3-1)

4" Pipe			
L1 & L2 Dist. (ft)	Temp. (°F)	R1 Radius (in)	R2 Radius (in)
0.5	1625	4.2	5.5
1	1374	3	4.4
1.5	1163	2.1	3.4
2	987	1.3	2.6
2.5	839	0.6	2
3	715	0.1	1.4
3.5	610	Contact	0.9
4	523		0.6
4.5	450		0.2
5	389		Contact

Side 1 Photo

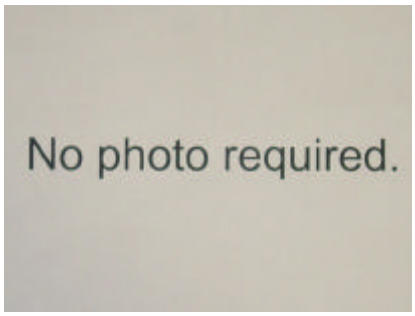

Side 2 Photo

Sketch

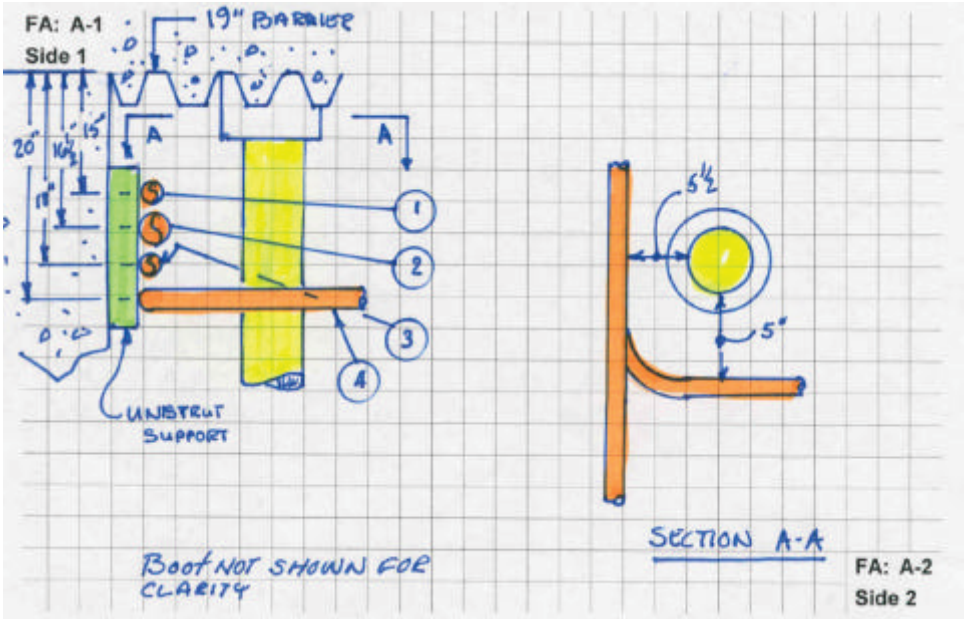

Penetration Seal Data

Appendix: B8

Penetration #: P131S0513

Penetration Type: RB-5A **Fire Area (Side 1):** A-8 **Fire Area (Side 2):** A-1

Loc./Elev.: 2000'-0" **M-0X Dwg:** M-1X1311

1. **Barrier Thickness:** 20"
2. **Opening Size:** 10"D
3. **Penetrants:** (1) 3"P
4. **Sealant Type:** HDSE/HDLE, Ceramic Fiber
5. **Damming Side1:** Boot
6. **Damming Side 2:** Boot
7. **Damming Continuity (Acc/Rej):** N/A
8. **Boot Condition (Acc/Rej):** Accept
9. **Sealant Depth:** 21" **
10. **Annular Gap (smallest):** 2"
11. **Gap between pen:** N/A
12. **Barrier Type:** F R
13. **Opening Sleeved or Concrete:** Steel
14. **Pipe Insulated:** No

Wayne Aregood
Prepared By:

Jeff Suter
Reviewed By:

Walkdown Comments:

Slab thickness based on C-1C1311. ** Sealant Depth determined from inspection report.

Sketch:

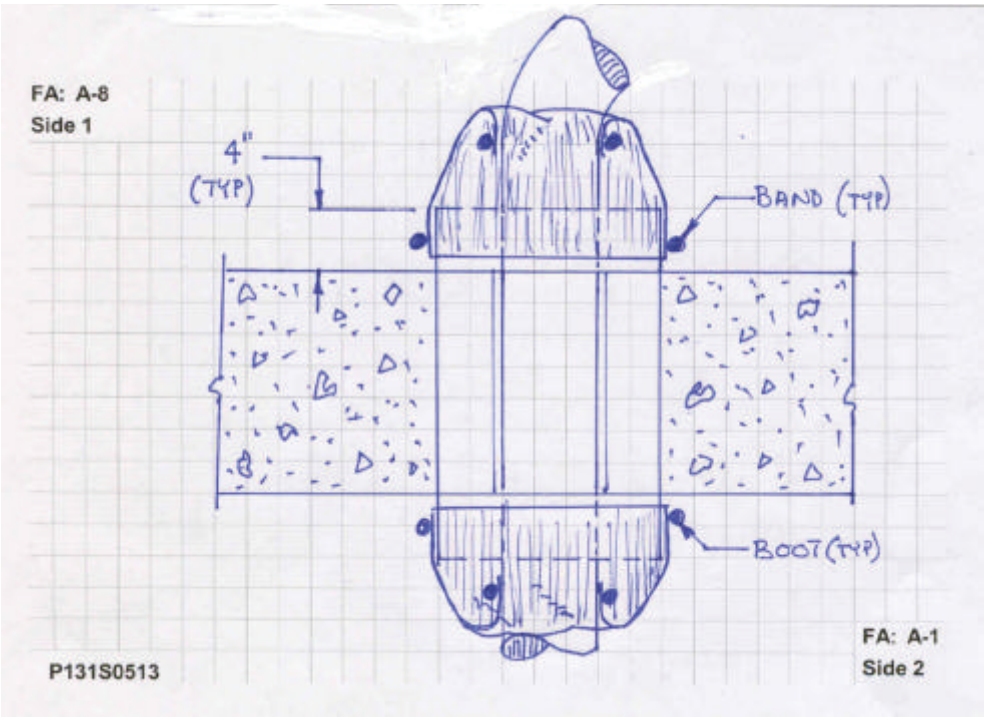

Penetration Seal Data

Appendix: B8

Photos: P131S0513

Fire Area A-8 (Side 1)

Fire Area A-8 (Side 1)

Fire Area A-1 (Side 2)

Fire Area A-1 (Side 2)

Penetration Seal Data

Appendix: B8

Heat Affected Zone Review: P131S0513

Fire Area (Side 1) A-8

No issues within Heat Affected Zone

Fire Area (Side 2) A-1

No issues within Heat Affected Zone

Review Distances

(Reference M-663-00017A, Figure 7.2.3-1)

3" Pipe			
L1 & L2 Dist. (ft)	Temp. (°F)	R1 Radius (in)	R2 Radius (in)
0.5	1607	4.1	5.4
1	1344	2.9	4.3
1.5	1126	1.9	3.3
2	945	1.1	2.5
2.5	795	0.4	1.8
3	671	Contact	1.2
3.5	568		0.8
4	483		0.4
4.5	412		0.1
5	354		Contact

Side 1 Photo

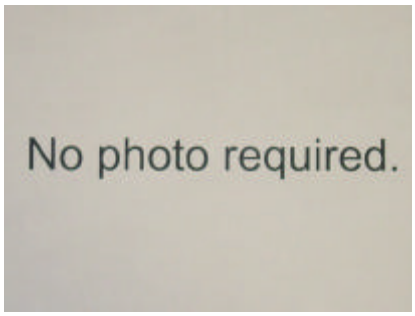

Side 2 Photo

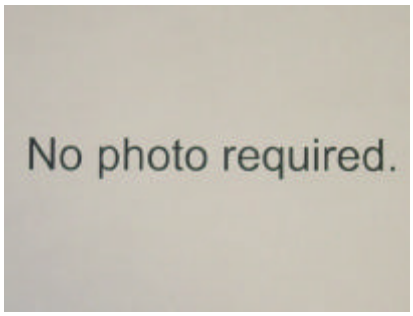

Sketch

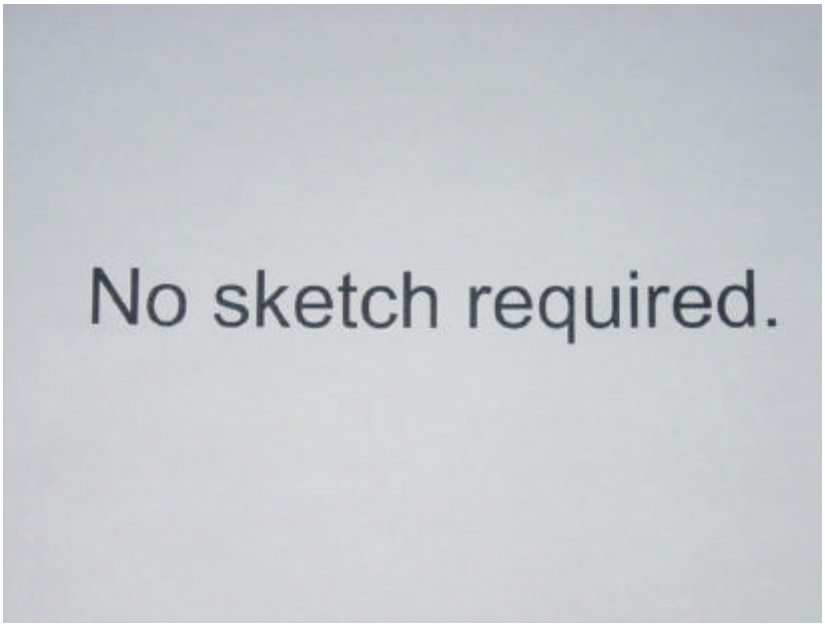

Penetration Seal Data

Appendix: B8

Penetration #: P131S0522

Penetration Type: RB-5A **Fire Area (Side 1):** A-8 **Fire Area (Side 2):** A-1

Loc./Elev.: 2000'-0" **M-0X Dwg:** M-1X1311

1. **Barrier Thickness:** 20"
2. **Opening Size:** 10"D
3. **Penetrants:** (1) 3"P
4. **Sealant Type:** HDSE/HDLE, Ceramic Fiber
5. **Damming Side1:** Boot
6. **Damming Side 2:** Boot
7. **Damming Continuity (Acc/Rej):** N/A
8. **Boot Condition (Acc/Rej):** Accept
9. **Sealant Depth:** 20"**
10. **Annular Gap (smallest):** 3"
11. **Gap between pen:** N/A
12. **Barrier Type:** F R
13. **Opening Sleeved or Concrete:** Steel
14. **Pipe Insulated:** No

Wayne Aregood
Prepared By:

Jeff Suter
Reviewed By:

Walkdown Comments:

Slab thickness based on C-1C1311. ** Sealant depth determined by inspection report.

Sketch:

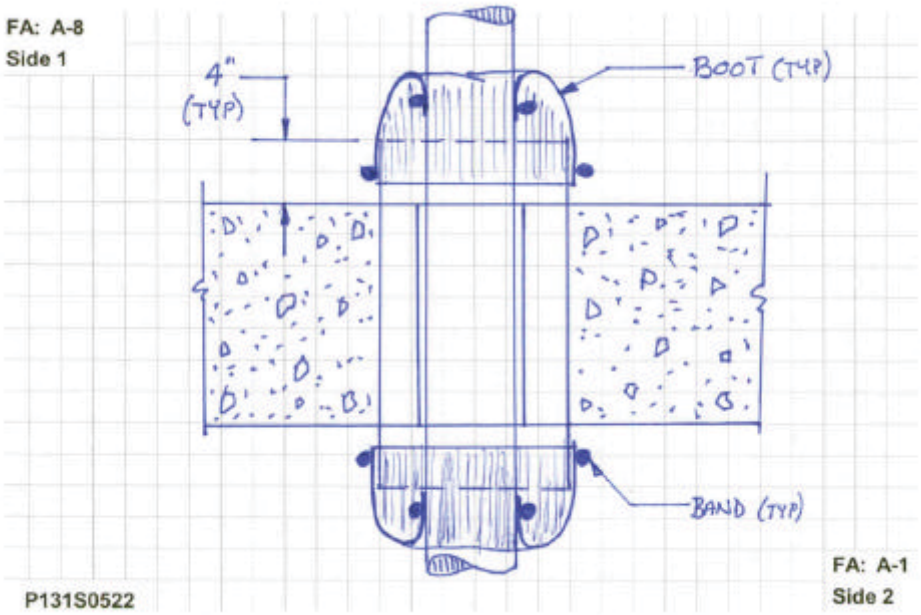

Penetration Seal Data

Appendix: B8

Photos: P131S0522

Fire Area A-8 (Side 1)

Fire Area A-8 (Side 1)

Fire Area A-1 (Side 2)

Fire Area A-1 (Side 2)

Penetration Seal Data

Appendix: B8

Heat Affected Zone Review: P131S0522

Fire Area (Side 1) A-8

No issues within Heat Affected Zone

Fire Area (Side 2) A-1

No issues within Heat Affected Zone

Review Distances

(Reference M-663-00017A, Figure 7.2.3-1)

3" Pipe			
L1 & L2 Dist. (ft)	Temp. (°F)	R1 Radius (in)	R2 Radius (in)
0.5	1607	4.1	5.4
1	1344	2.9	4.3
1.5	1126	1.9	3.3
2	945	1.1	2.5
2.5	795	0.4	1.8
3	671	Contact	1.2
3.5	568		0.8
4	483		0.4
4.5	412		0.1
5	354		Contact

Side 1 Photo

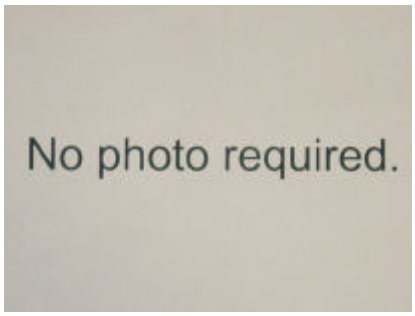

Side 2 Photo

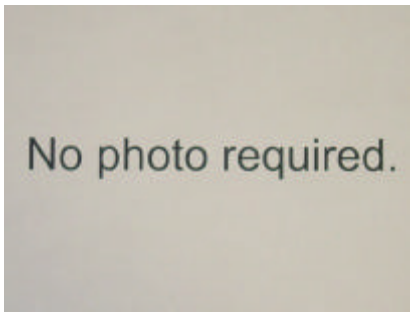

Sketch

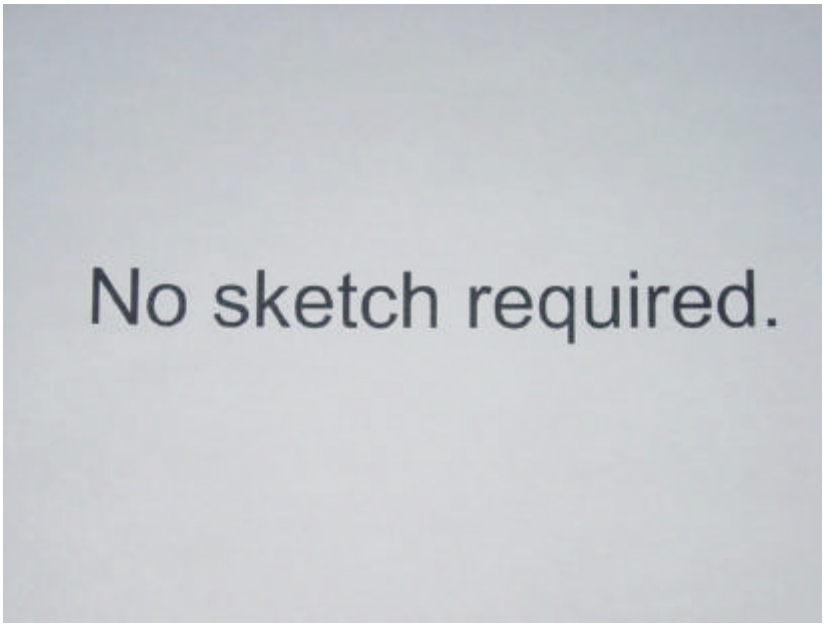

Penetration Seal Data

Appendix: B8

Penetration #: P131S0525

Penetration Type: RB-5A **Fire Area (Side 1):** A-8 **Fire Area (Side 2):** A-1

Loc./Elev.: 2000'-0" **M-0X Dwg:** M-1X1311

1. **Barrier Thickness:** 20"
2. **Opening Size:** 10"D
3. **Penetrants:** (1) 3"P
4. **Sealant Type:** HDSE/HDLE, Ceramic Fiber
5. **Damming Side1:** Boot
6. **Damming Side 2:** Boot
7. **Damming Continuity (Acc/Rej):** N/A
8. **Boot Condition (Acc/Rej):** Accept
9. **Sealant Depth:** 22-1/2" **
10. **Annular Gap (smallest):** 3"
11. **Gap between pen:** N/A
12. **Barrier Type:** F R
13. **Opening Sleeved or Concrete:** Steel
14. **Pipe Insulated:** No

Wayne Aregood
Prepared By:

Jeff Suter
Reviewed By:

Walkdown Comments:

Slab thickness based on C-1C1311. ** Sealant depth determined by inspection report.

Sketch:

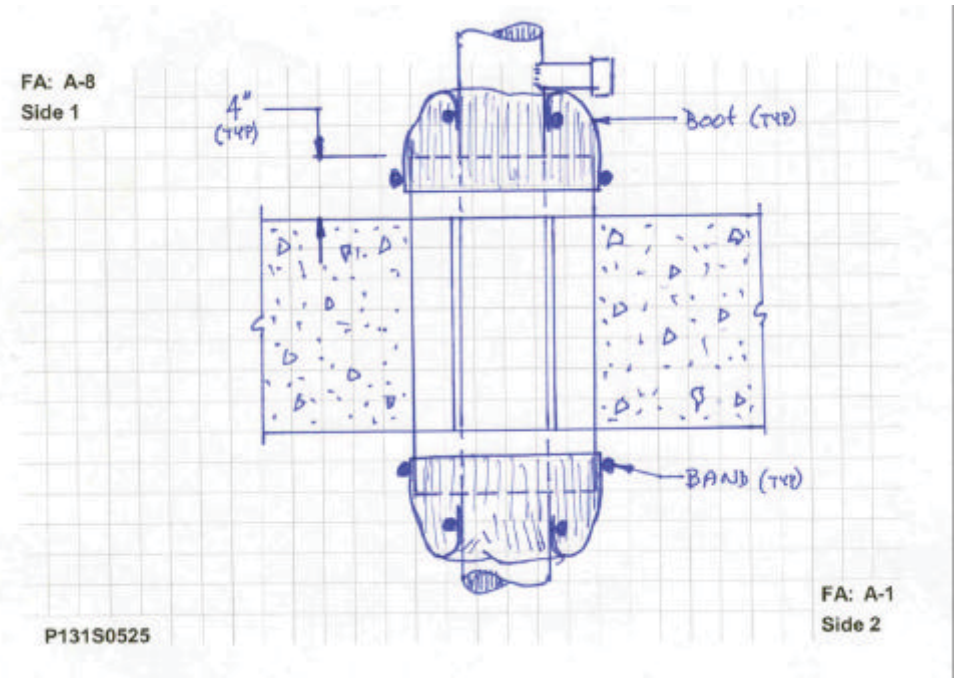

Penetration Seal Data

Appendix: B8

Photos: P131S0525

Fire Area A-8 (Side 1)

Fire Area A-8 (Side 1)

Fire Area A-1 (Side 2)

Fire Area A-1 (Side 2)

Penetration Seal Data

Appendix: B8

Heat Affected Zone Review: P131S0525

Fire Area (Side 1) A-8

No issues within Heat Affected Zone

Fire Area (Side 2) A-1

No issues within Heat Affected Zone

Review Distances

(Reference M-663-00017A, Figure 7.2.3-1)

3" Pipe			
L1 & L2 Dist. (ft)	Temp. (°F)	R1 Radius (in)	R2 Radius (in)
0.5	1607	4.1	5.4
1	1344	2.9	4.3
1.5	1126	1.9	3.3
2	945	1.1	2.5
2.5	795	0.4	1.8
3	671	Contact	1.2
3.5	568		0.8
4	483		0.4
4.5	412		0.1
5	354		Contact

Side 1 Photo

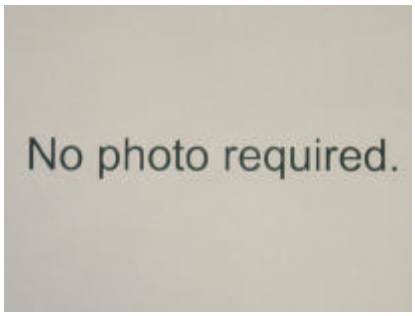

Side 2 Photo

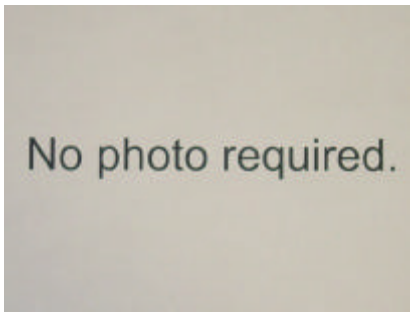

Sketch

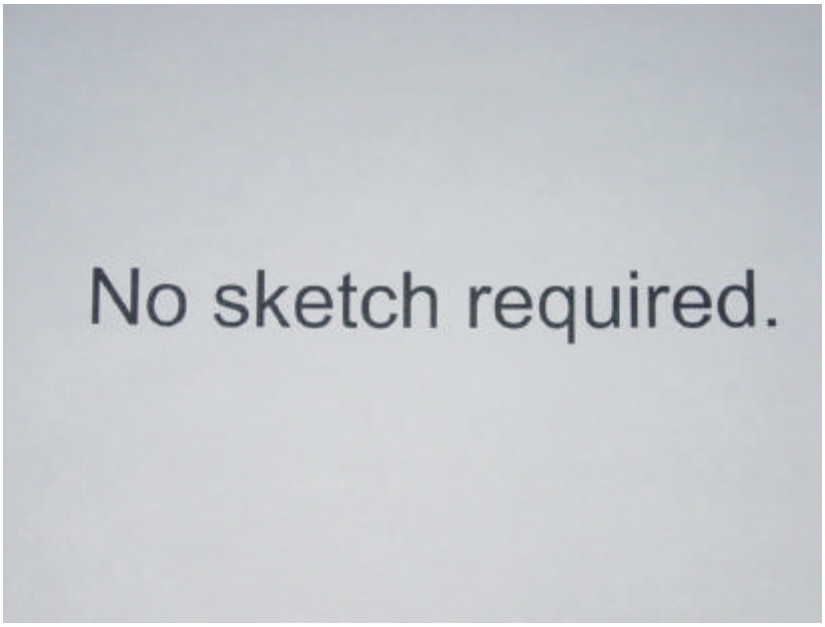

Penetration Seal Data

Appendix: B8

Penetration #: P131S0526

Penetration Type: RB-5A **Fire Area (Side 1):** A-9 **Fire Area (Side 2):** A-1

Loc./Elev.: 2000'-0" **M-0X Dwg:** M-1X1311

1. **Barrier Thickness:** 20"
2. **Opening Size:** 18"D
3. **Penetrants:** (1) 10"P
4. **Sealant Type:** HDSE/HDLE, Ceramic Fiber
5. **Damming Side1:** Boot
6. **Damming Side 2:** Boot
7. **Damming Continuity (Acc/Rej):** N/A
8. **Boot Condition (Acc/Rej):** Accept
9. **Sealant Depth:** Assumed Per Detail
10. **Annular Gap (smallest):** 1"
11. **Gap between pen:** N/A
12. **Barrier Type:** F R
13. **Opening Sleeved or Concrete:** Steel
14. **Pipe Insulated:** Yes

Wayne Aregood
Prepared By:

Jeff Suter
Reviewed By:

Walkdown Comments:

Slab thickness based on C-1C1311. Insulation appears to go through the sealant from the bottom side. However, the top side insulation terminates just above the boot. Therefore, the insulation will be assumed not to go through the seal.

Sketch:

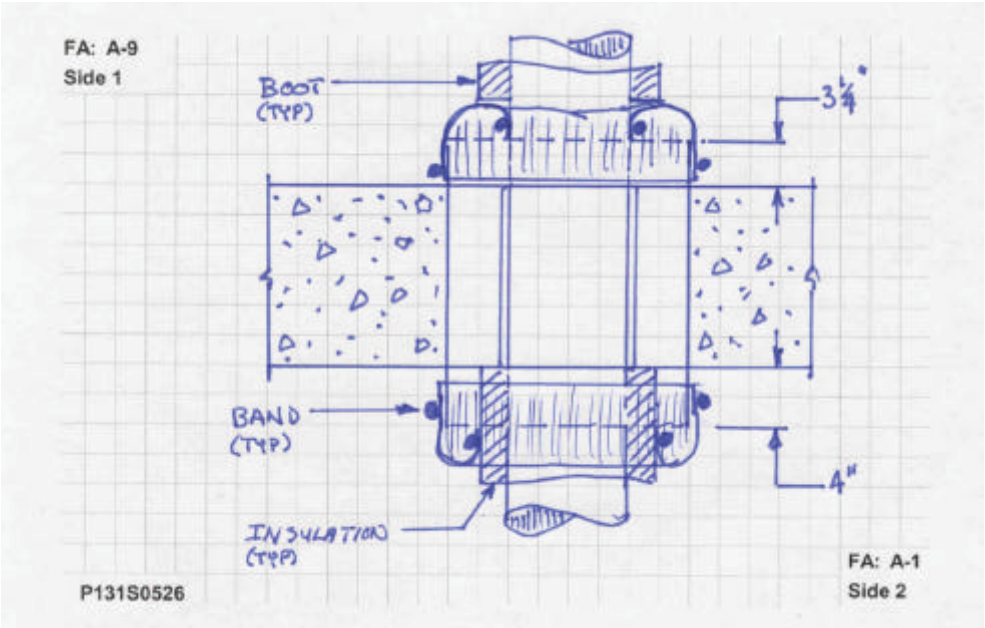

Penetration Seal Data

Appendix: B8

Photos: P131S0526

Fire Area A-9 (Side 1)

Fire Area A-9 (Side 1)

Fire Area A-1 (Side 2)

Fire Area A-1 (Side 2)

Penetration Seal Data

Appendix: B8

Heat Affected Zone Review: P131S0526

Fire Area (Side 1) A-9

No issues within Heat Affected Zone

Fire Area (Side 2) A-1

No issues within Heat Affected Zone

Review Distances

(Reference M-663-00017A, Figure 7.2.3-1)

10" Pipe			
L1 & L2 Dist. (ft)	Temp. (°F)	R1 Radius (in)	R2 Radius (in)
0.5	1697	4.5	5.8
1	1497	3.6	4.9
1.5	1321	2.8	4.1
2	1167	2.1	3.5
2.5	1032	1.5	2.8
3	914	1	2.3
3.5	810	0.5	1.8
4	719	0.1	1.4
4.5	639	Contact	1.1
5	569		0.8
5.5	508		0.5
6	454		0.2
6.5	406		0
7	365		Contact

Side 1 Photo

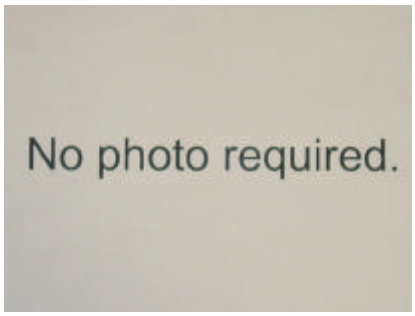

Side 2 Photo

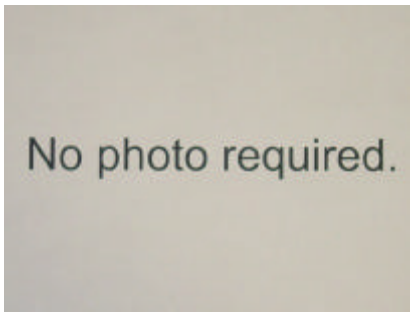

Sketch

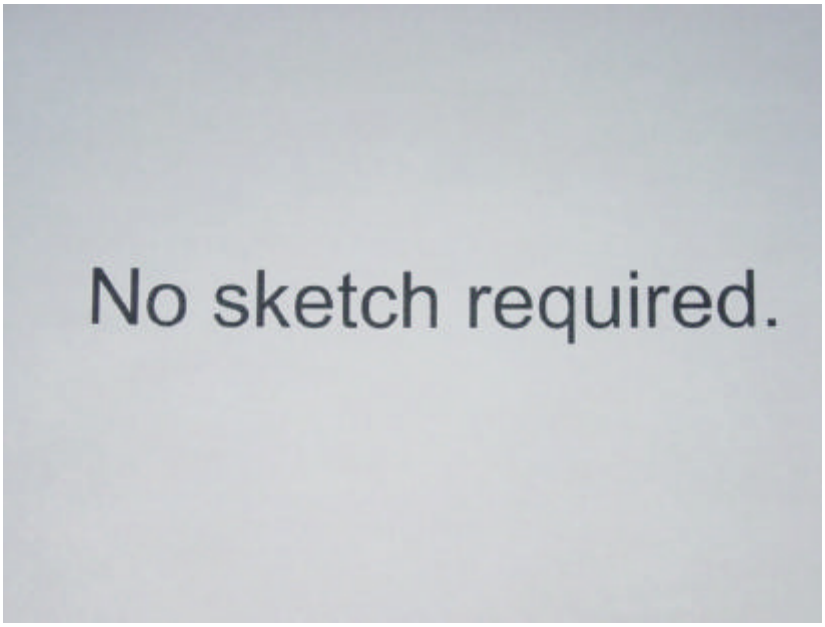

Penetration Seal Data

Appendix: B8

Penetration #: P131S0529

Penetration Type: RB-5A **Fire Area (Side 1):** A-9 **Fire Area (Side 2):** A-1

Loc./Elev.: 2000'-0" **M-0X Dwg:** M-1X1311

1. **Barrier Thickness:** 20"
2. **Opening Size:** 24"D
3. **Penetrants:** (1) 10"P
4. **Sealant Type:** HDSE/HDLE, Ceramic Fiber
5. **Damming Side1:** Boot
6. **Damming Side 2:** Boot
7. **Damming Continuity (Acc/Rej):** N/A
8. **Boot Condition (Acc/Rej):** Accept
9. **Sealant Depth:** 20-1/2"**
10. **Annular Gap (smallest):** 3"
11. **Gap between pen:** N/A
12. **Barrier Type:** F R
13. **Opening Sleeved or Concrete:** Steel
14. **Pipe Insulated:** Yes

Wayne Aregood
Prepared By:

Jeff Suter
Reviewed By:

Walkdown Comments:

Slab thickness based on C-1C1311. ** Sealant depth determined by inspection report.

Sketch:

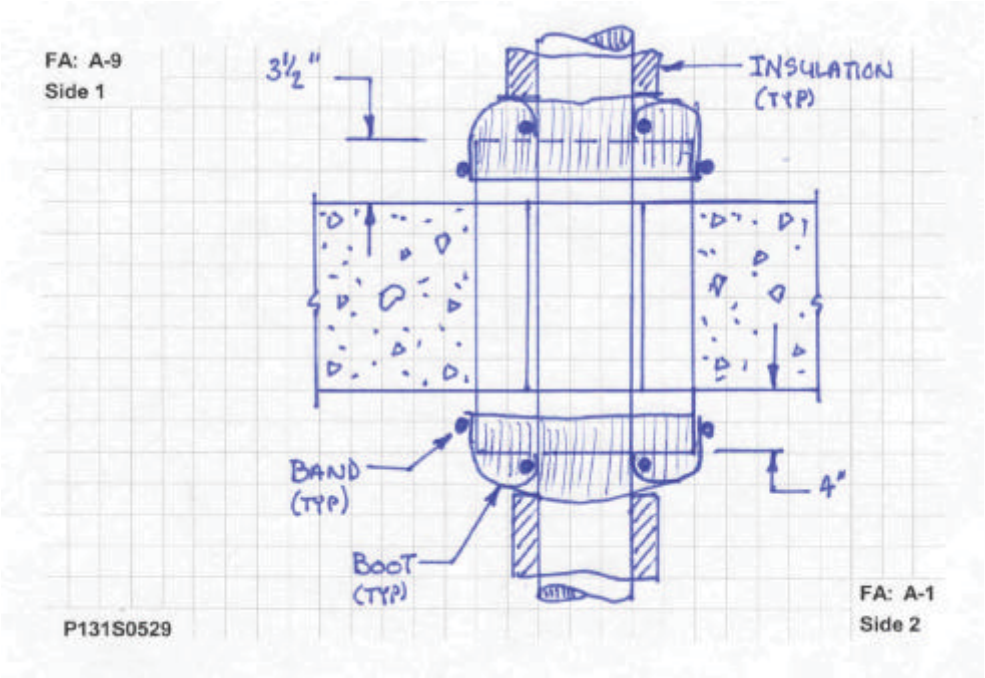

Penetration Seal Data

Appendix: B8

Photos: P131S0529

Fire Area A-9 (Side 1)

Fire Area A-9 (Side 1)

Fire Area A-1 (Side 2)

Fire Area A-1 (Side 2)

Penetration Seal Data

Appendix: B8

Heat Affected Zone Review: P131S0529

Fire Area (Side 1) A-9

No issues within Heat Affected Zone

Fire Area (Side 2) A-1

No issues within Heat Affected Zone

Review Distances

(Reference M-663-00017A, Figure 7.2.3-1)

10" Pipe			
L1 & L2 Dist. (ft)	Temp. (°F)	R1 Radius (in)	R2 Radius (in)
0.5	1697	4.5	5.8
1	1497	3.6	4.9
1.5	1321	2.8	4.1
2	1167	2.1	3.5
2.5	1032	1.5	2.8
3	914	1	2.3
3.5	810	0.5	1.8
4	719	0.1	1.4
4.5	639	Contact	1.1
5	569		0.8
5.5	508		0.5
6	454		0.2
6.5	406		0
7	365		Contact

Side 1 Photo

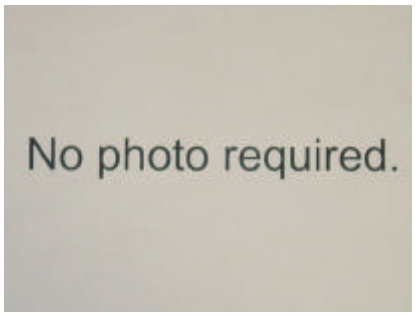

Side 2 Photo

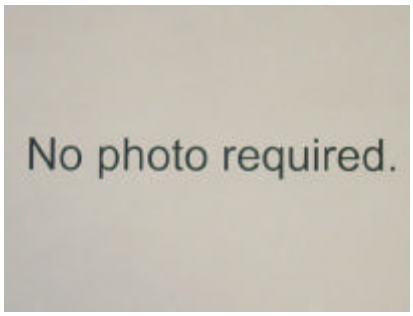

Sketch

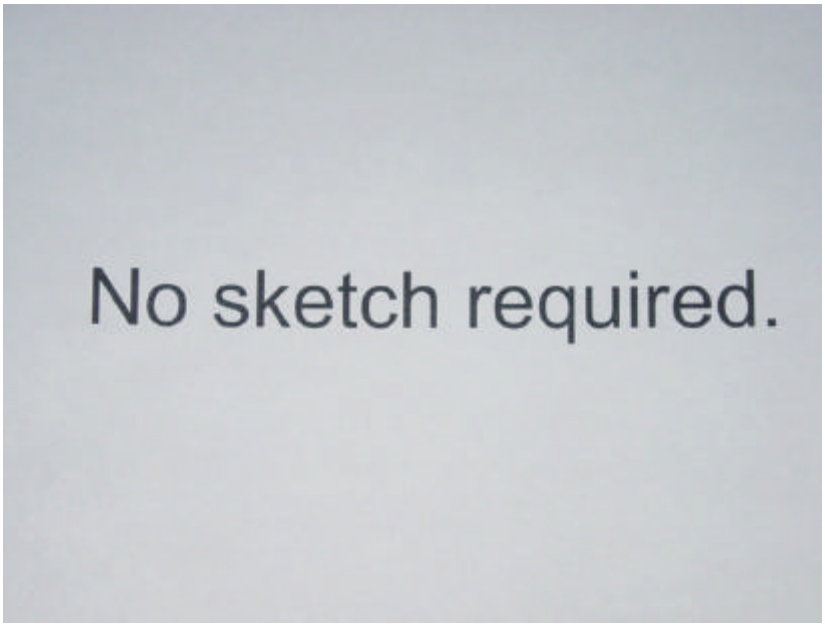

Penetration Seal Data

Appendix: B8

Penetration #: P131S0530

Penetration Type: RB-5A **Fire Area (Side 1):** A-9 **Fire Area (Side 2):** A-1

Loc./Elev.: 2000'-0" **M-0X Dwg:** M-1X1311

1. **Barrier Thickness:** 20"
2. **Opening Size:** 24"D
3. **Penetrants:** (1) 10"P
4. **Sealant Type:** HDSE/HDLE, Ceramic Fiber
5. **Damming Side1:** Boot
6. **Damming Side 2:** Boot
7. **Damming Continuity (Acc/Rej):** N/A
8. **Boot Condition (Acc/Rej):** Accept
9. **Sealant Depth:** 23" **
10. **Annular Gap (smallest):** 6"
11. **Gap between pen:** N/A
12. **Barrier Type:** F R
13. **Opening Sleeved or Concrete:** Steel
14. **Pipe Insulated:** * Yes

Wayne Aregood
Prepared By:

Jeff Suter
Reviewed By:

Walkdown Comments:

Slab thickness based on C-1C1311. * From the bottom side examination, it appears that the insulation transitions through the seal area. ** Sealant depth determined by inspection report.

Sketch:

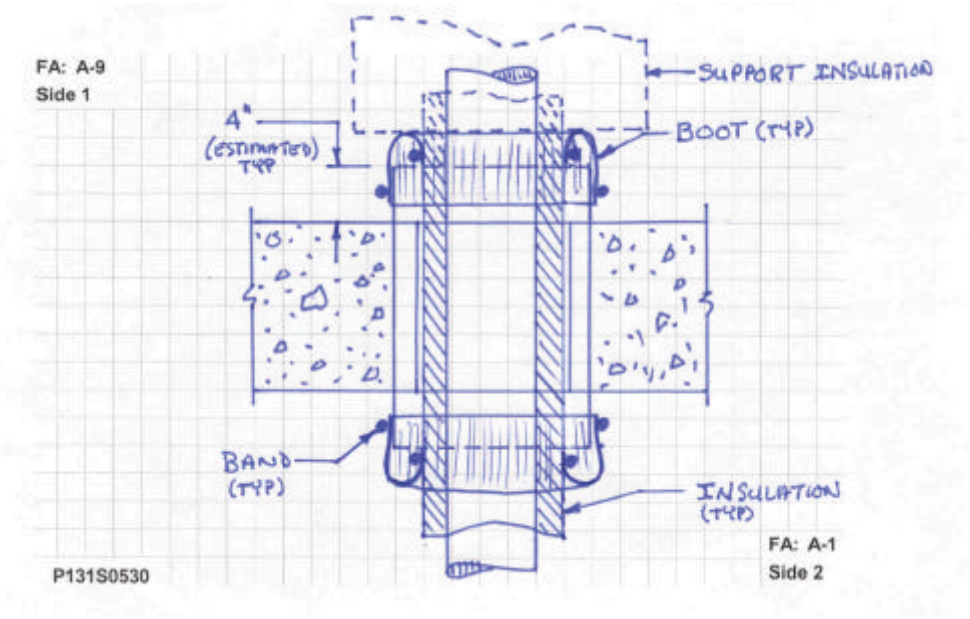

Penetration Seal Data

Appendix: B8

Photos: P131S0530

Fire Area A-9 (Side 1)

Fire Area A-9 (Side 1)

Fire Area A-1 (Side 2)

Fire Area A-1 (Side 2)

Penetration Seal Data

Appendix: B8

Heat Affected Zone Review: P131S0530

Fire Area (Side 1) A-9

No issues within Heat Affected Zone

Fire Area (Side 2) A-1

No issues within Heat Affected Zone

Review Distances

(Reference M-663-00017A, Figure 7.2.3-1)

10" Pipe			
L1 & L2 Dist. (ft)	Temp. (°F)	R1 Radius (in)	R2 Radius (in)
0.5	1697	4.5	5.8
1	1497	3.6	4.9
1.5	1321	2.8	4.1
2	1167	2.1	3.5
2.5	1032	1.5	2.8
3	914	1	2.3
3.5	810	0.5	1.8
4	719	0.1	1.4
4.5	639	Contact	1.1
5	569		0.8
5.5	508		0.5
6	454		0.2
6.5	406		0
7	365		Contact

Side 1 Photo

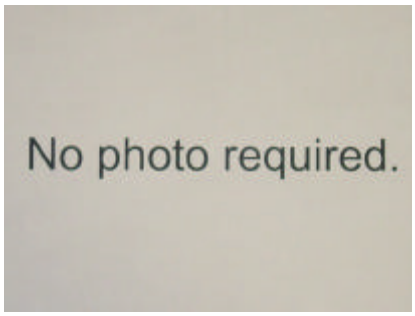

Side 2 Photo

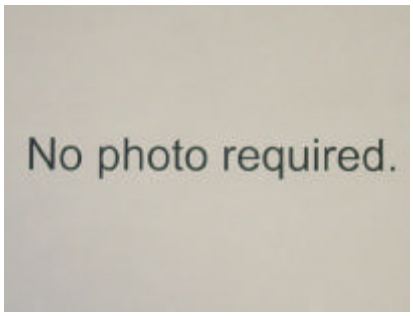

Sketch

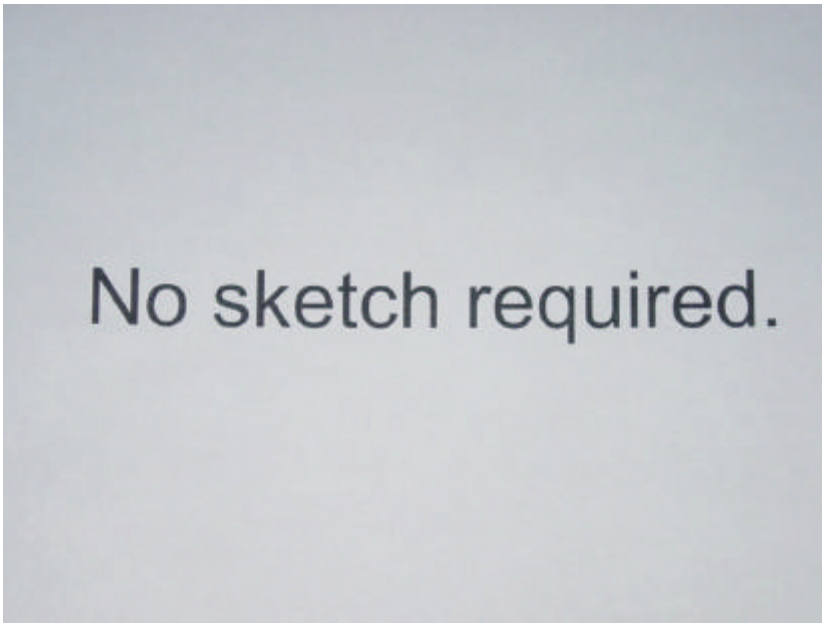

Penetration Seal Data

Appendix: B8

Penetration #: P131S0531

Penetration Type: RB-5A **Fire Area (Side 1):** A-9 **Fire Area (Side 2):** A-1

Loc./Elev.: 2000'-0" **M-0X Dwg:** M-1X1311

1. **Barrier Thickness:** 20"
2. **Opening Size:** 16"D
3. **Penetrants:** (1) 8"P
4. **Sealant Type:** HDSE/HDLE, Ceramic Fiber
5. **Damming Side1:** Boot
6. **Damming Side 2:** Boot
7. **Damming Continuity (Acc/Rej):** N/A
8. **Boot Condition (Acc/Rej):** Accept
9. **Sealant Depth:** 22-1/2" **
10. **Annular Gap (smallest):** 1" estimated
11. **Gap between pen:** N/A
12. **Barrier Type:** F R
13. **Opening Sleeved or Concrete:** Steel
14. **Pipe Insulated:** * Yes

Wayne Aregood
Prepared By:

Jeff Suter
Reviewed By:

Walkdown Comments:

Slab thickness based on C-1C1311. * It appears that the insulation transitions through the seal area. Appears to have an FB-6 on top side. Can not absolutely verify due to contaminated area. ** Sealant depth determined by inspection report.

Sketch:

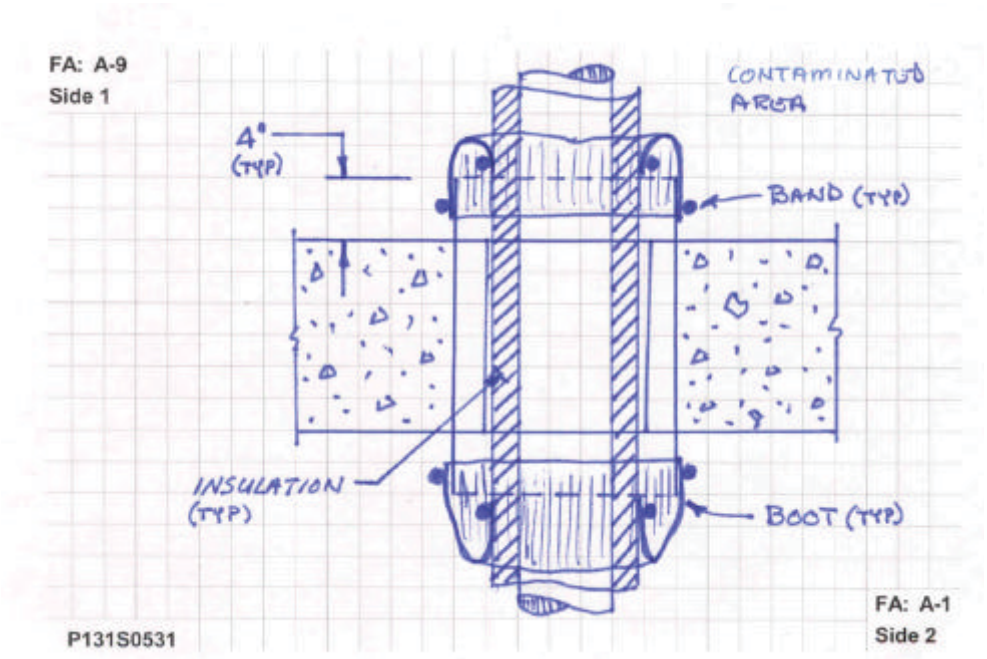

Penetration Seal Data

Appendix: B8

Photos: P131S0531

Fire Area A-9 (Side 1)

Fire Area A-9 (Side 1)

Fire Area A-1 (Side 2)

Fire Area A-1 (Side 2)

Penetration Seal Data

Appendix: B8

Heat Affected Zone Review: P131S0531

Fire Area (Side 1) A-9

No issues within Heat Affected Zone

Fire Area (Side 2) A-1

No issues within Heat Affected Zone

Review Distances

(Reference M-663-00017A, Figure 7.2.3-1)

8" Pipe			
L1 & L2 Dist. (ft)	Temp. (°F)	R1 Radius (in)	R2 Radius (in)
0.5	1677	4.4	5.8
1	1463	3.4	4.8
1.5	1277	2.6	3.9
2	1116	1.9	3.2
2.5	976	1.2	2.6
3	855	0.7	2
3.5	750	0.2	1.6
4	659	Contact	1.2
4.5	581		0.8
5	512		0.5
5.5	453		0.2
6	402		0
6.5	358		Contact

Side 1 Photo

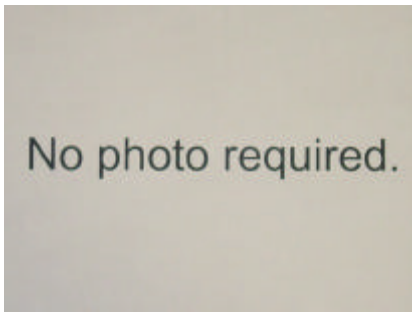

Side 2 Photo

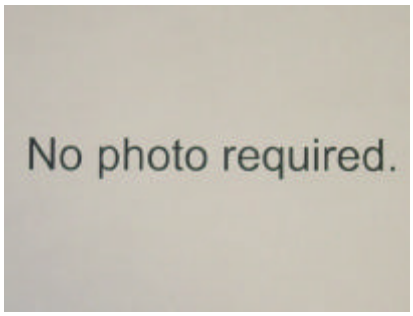

Sketch

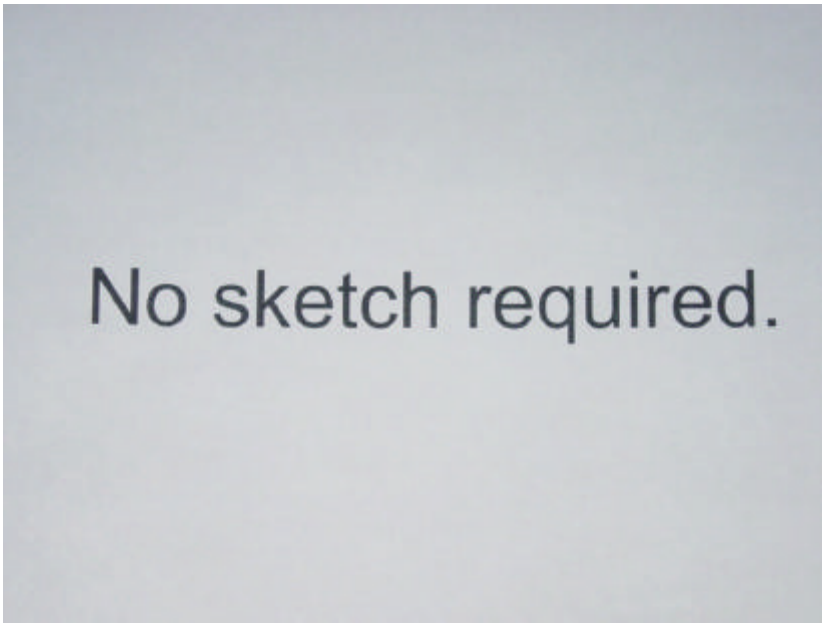

Penetration Seal Data

Appendix: B8

Penetration #: P132S0697

Penetration Type: RB-5A **Fire Area (Side 1):** A-10 **Fire Area (Side 2):** A-1

Loc./Elev.: 2000'-0" **M-0X Dwg:** M-1X1321

1. **Barrier Thickness:** 20"
2. **Opening Size:** 18"D
3. **Penetrants:** (1) 8"P
4. **Sealant Type:** HDSE/HDLE, Ceramic Fiber
5. **Damming Side1:** Boot
6. **Damming Side 2:** Boot
7. **Damming Continuity (Acc/Rej):** N/A
8. **Boot Condition (Acc/Rej):** Accept
9. **Sealant Depth:** Assumed Per Detail
10. **Annular Gap (smallest):** 4"
11. **Gap between pen:** N/A
12. **Barrier Type:** F R
13. **Opening Sleeved or Concrete:** Steel
14. **Pipe Insulated:** No

Wayne Aregood
Prepared By:

Jeff Suter
Reviewed By:

Walkdown Comments:

Slab thickness based on C-1C1311.

Sketch:

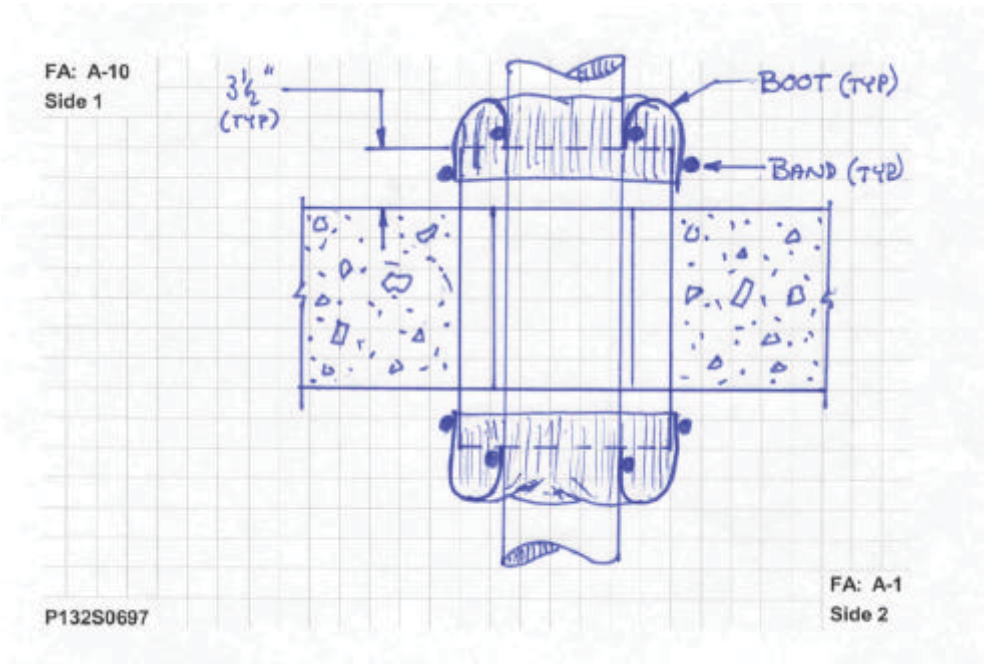

Penetration Seal Data

Appendix: B8

Photos: P132S0697

Fire Area A-10 (Side 1)

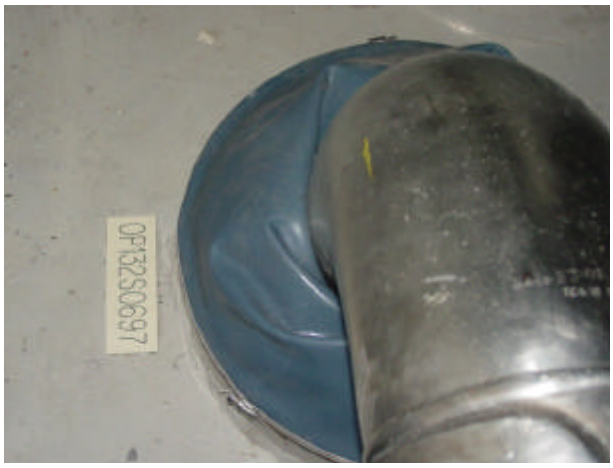

Fire Area A-10 (Side 1)

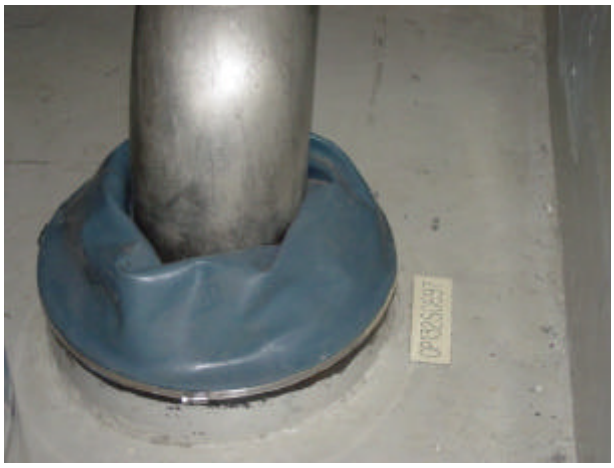

Fire Area A-1 (Side 2)

Fire Area A-1 (Side 2)

Penetration Seal Data

Appendix: B8

Heat Affected Zone Review: P132S0697

Fire Area (Side 1) A-10

No issues within Heat Affected Zone

Fire Area (Side 2) A-1

No issues within Heat Affected Zone

Review Distances

(Reference M-663-00017A, Figure 7.2.3-1)

8" Pipe			
L1 & L2 Dist. (ft)	Temp. (°F)	R1 Radius (in)	R2 Radius (in)
0.5	1677	4.4	5.8
1	1463	3.4	4.8
1.5	1277	2.6	3.9
2	1116	1.9	3.2
2.5	976	1.2	2.6
3	855	0.7	2
3.5	750	0.2	1.6
4	659	Contact	1.2
4.5	581		0.8
5	512		0.5
5.5	453		0.2
6	402		0
6.5	358		Contact

Side 1 Photo

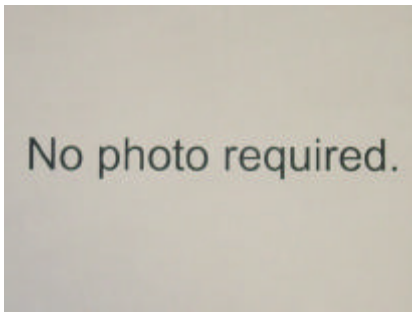

Side 2 Photo

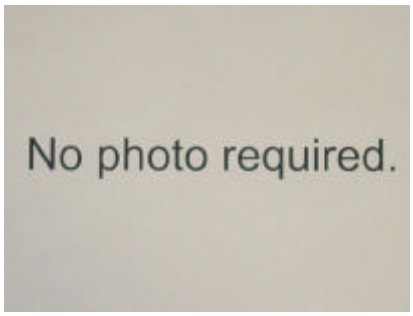

Sketch

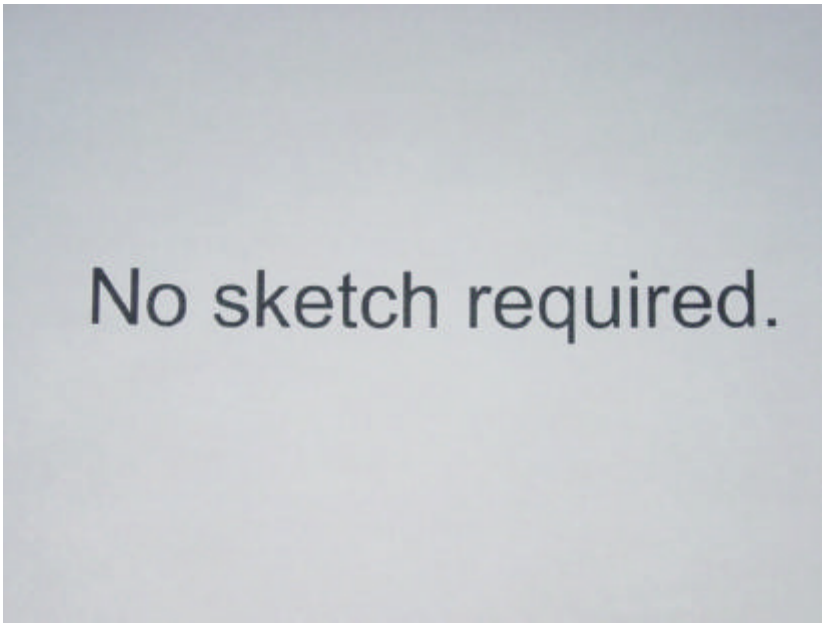

Penetration Seal Data

Appendix: B8

Penetration #: P132S0698

Penetration Type: RB-5A **Fire Area (Side 1):** A-10 **Fire Area (Side 2):** A-1

Loc./Elev.: 2000'-0" **M-0X Dwg:** M-1X1321

1. **Barrier Thickness:** 20"
2. **Opening Size:** 18"D
3. **Penetrants:** (1) 10"P
4. **Sealant Type:** HDSE/HDLE, Ceramic Fiber
5. **Damming Side1:** Boot
6. **Damming Side 2:** Boot
7. **Damming Continuity (Acc/Rej):** N/A
8. **Boot Condition (Acc/Rej):** Accept
9. **Sealant Depth:** 21-1/2" **
10. **Annular Gap (smallest):** 1"
11. **Gap between pen:** N/A
12. **Barrier Type:** F R
13. **Opening Sleeved or Concrete:** Steel
14. **Pipe Insulated:** No

Wayne Aregood
Prepared By:

Jeff Suter
Reviewed By:

Walkdown Comments:

Slab thickness based on C-1C1311. Due to the offset that is present on the bottom side, it is not likely the insulation transition through the seal. However the pipe is insulated on both sides of the seal. Sealant depth determined by inspection report.

Sketch:

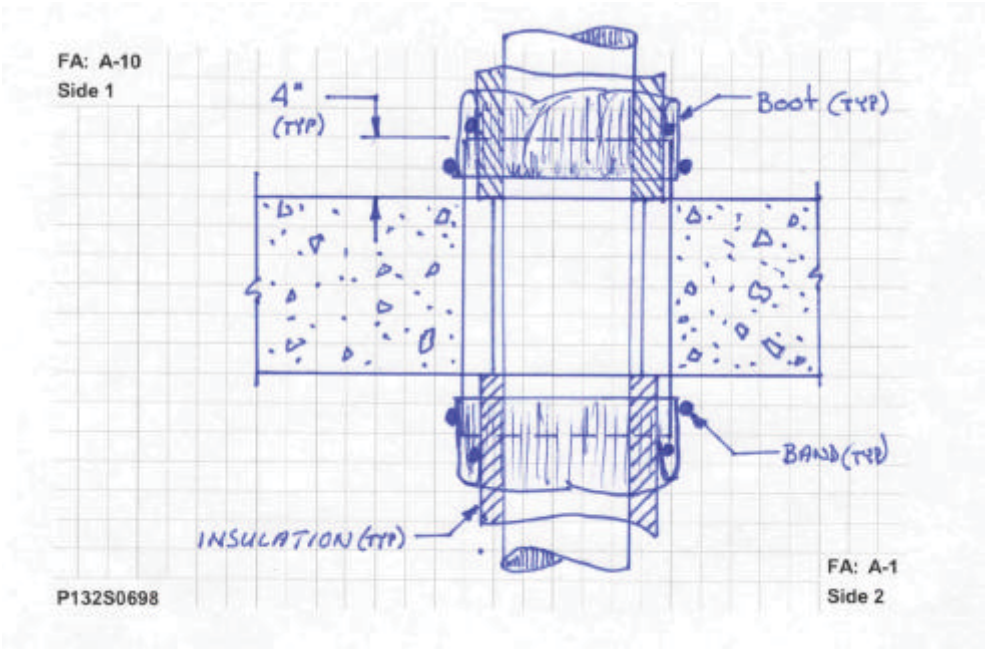

Penetration Seal Data

Appendix: B8

Photos: P132S0698

Fire Area A-10 (Side 1)

Fire Area A-10 (Side 1)

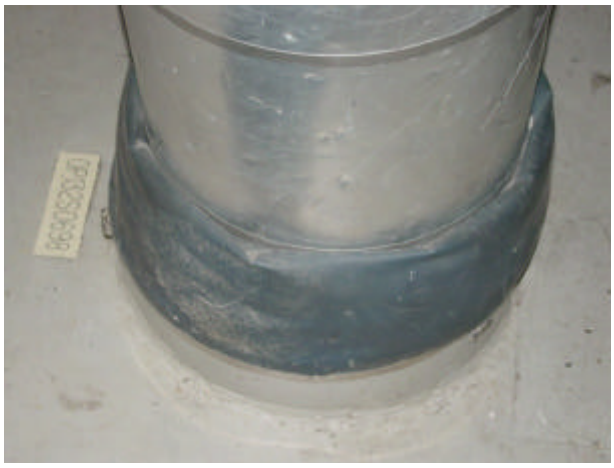

Fire Area A-1 (Side 2)

Fire Area A-1 (Side 2)

Penetration Seal Data

Appendix: B8

Heat Affected Zone Review: P132S0698

Fire Area (Side 1) A-10

No issues within Heat Affected Zone

Fire Area (Side 2) A-1

No issues within Heat Affected Zone

Review Distances

(Reference M-663-00017A, Figure 7.2.3-1)

10" Pipe			
L1 & L2 Dist. (ft)	Temp. (°F)	R1 Radius (in)	R2 Radius (in)
0.5	1697	4.5	5.8
1	1497	3.6	4.9
1.5	1321	2.8	4.1
2	1167	2.1	3.5
2.5	1032	1.5	2.8
3	914	1	2.3
3.5	810	0.5	1.8
4	719	0.1	1.4
4.5	639	Contact	1.1
5	569		0.8
5.5	508		0.5
6	454		0.2
6.5	406		0
7	365		Contact

Side 1 Photo

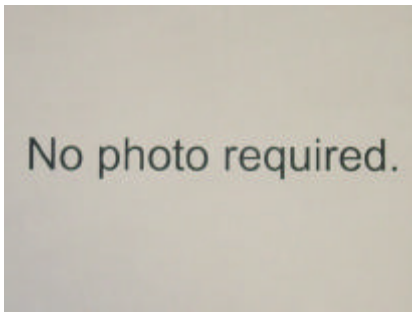

Side 2 Photo

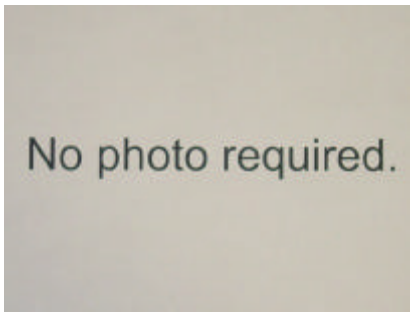

Sketch

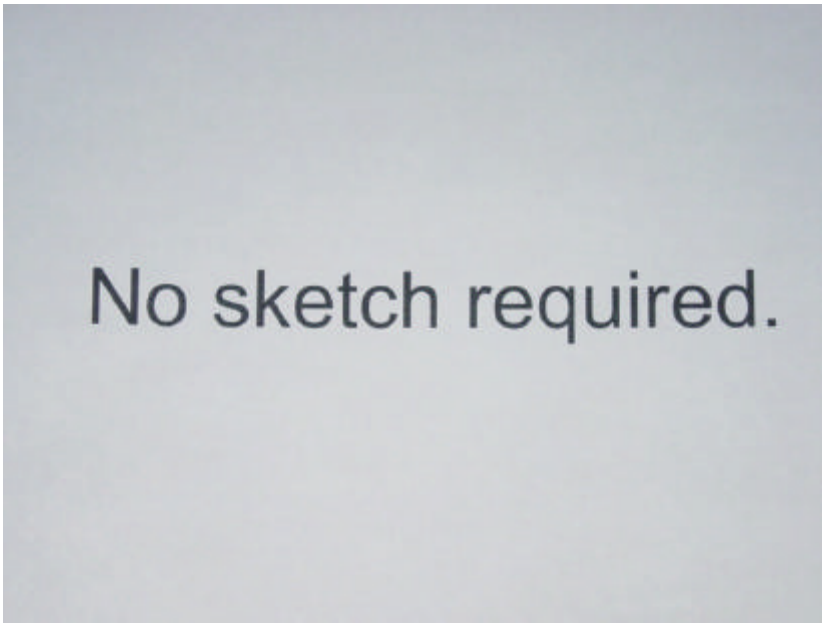

Penetration Seal Data

Appendix: B8

Penetration #: P132S0699

Penetration Type: RB-5A **Fire Area (Side 1):** A-8 **Fire Area (Side 2):** A-1

Loc./Elev.: 2000'-0" **M-0X Dwg:** M-1X1321

1. **Barrier Thickness:** 26"
2. **Opening Size:** 8"D
3. **Penetrants:** (1) 3"P, (1) 3/4"P
4. **Sealant Type:** HDSE/HDLE, Ceramic Fiber
5. **Damming Side1:** Boot
6. **Damming Side 2:** Boot
7. **Damming Continuity (Acc/Rej):** N/A
8. **Boot Condition (Acc/Rej):** Accept
9. **Sealant Depth:** Assumed Per Detail
10. **Annular Gap (smallest):** 1/2"
11. **Gap between pen:** 1/4"
12. **Barrier Type:** F R
13. **Opening Sleeved or Concrete:** Steel
14. **Pipe Insulated:** No

Wayne Aregood
Prepared By:

Jeff Suter
Reviewed By:

Walkdown Comments:

Slab thickness based on C-1C1311.

Sketch:

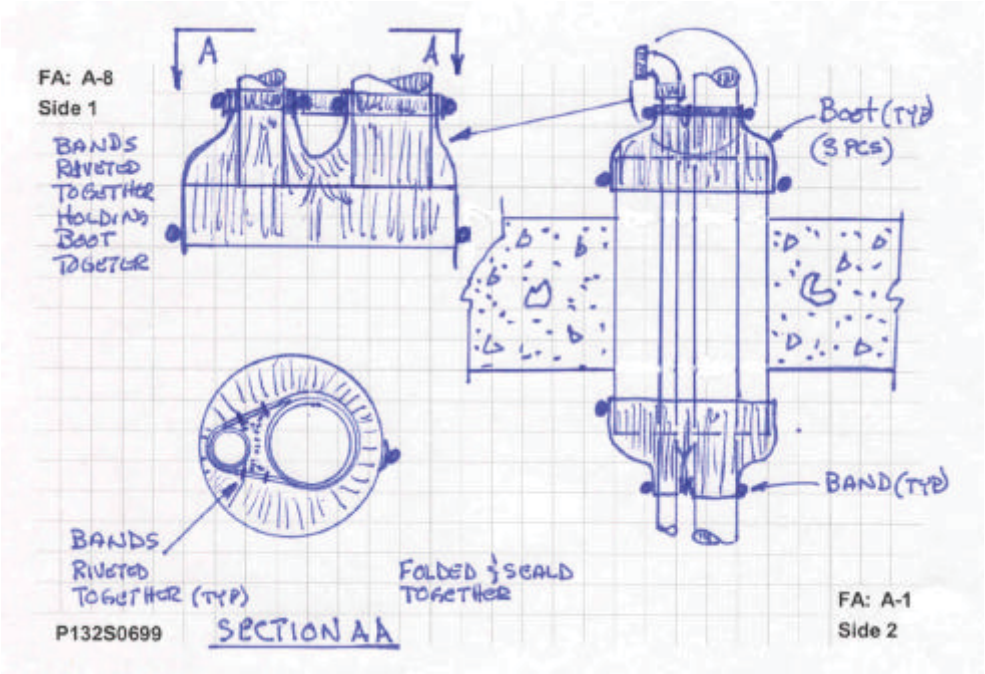

Penetration Seal Data

Appendix: B8

Photos: P132S0699

Fire Area A-8 (Side 1)

Fire Area A-8 (Side 1)

Fire Area A-1 (Side 2)

Fire Area A-1 (Side 2)

Penetration Seal Data

Appendix: B8

Heat Affected Zone Review: P132S0699

Fire Area (Side 1) A-8

1. 1-1/2" System Drain Pipe, No issues

Fire Area (Side 2) A-1

No issues within Heat Affected Zone

Review Distances

(Reference M-663-00017A, Figure 7.2.3-1)

3" Pipe			
L1 & L2 Dist. (ft)	Temp. (°F)	R1 Radius (in)	R2 Radius (in)
0.5	1607	4.1	5.4
1	1344	2.9	4.3
1.5	1126	1.9	3.3
2	945	1.1	2.5
2.5	795	0.4	1.8
3	671	Contact	1.2
3.5	568		0.8
4	483		0.4
4.5	412		0.1
5	354		Contact

Side 1 Photo

Side 2 Photo

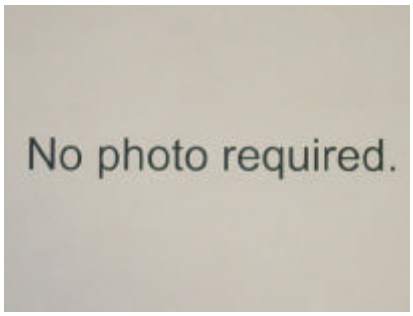

Sketch

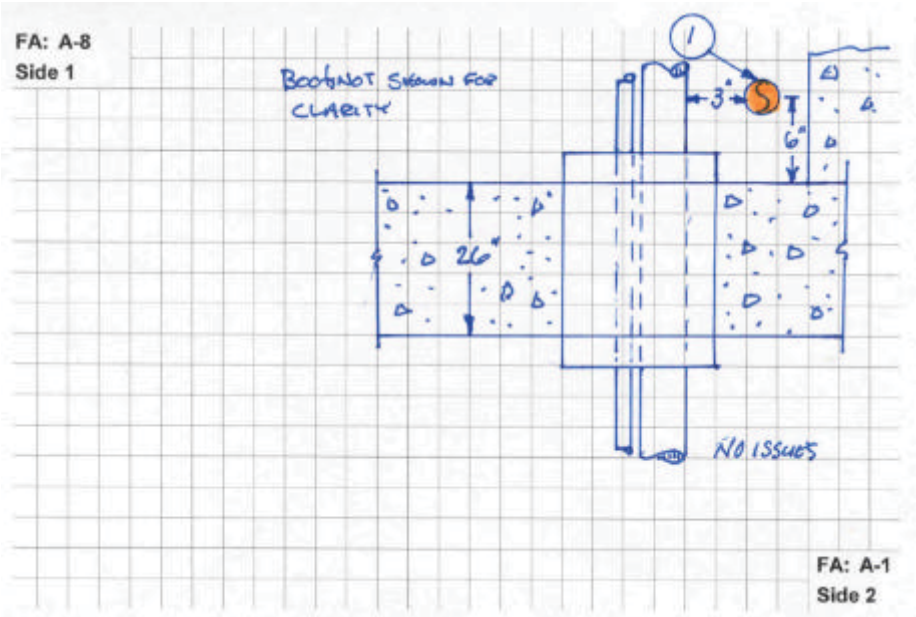

Penetration Seal Data

Appendix: B8

Penetration #: P132S0700

Penetration Type: RB-5A **Fire Area (Side 1):** A-8 **Fire Area (Side 2):** A-1

Loc./Elev.: 2000'-0" **M-0X Dwg:** M-1X1321

1. **Barrier Thickness:** 26"
2. **Opening Size:** 8"D
3. **Penetrants:** (1) 3"P, (1) 3/4"P
4. **Sealant Type:** HDSE/HDLE, Ceramic Fiber
5. **Damming Side1:** Boot
6. **Damming Side 2:** boot
7. **Damming Continuity (Acc/Rej):** N/A
8. **Boot Condition (Acc/Rej):** Accept
9. **Sealant Depth:** Assumed Per Detail
10. **Annular Gap (smallest):** 1/4"
11. **Gap between pen:** 1/2"
12. **Barrier Type:** F R
13. **Opening Sleeved or Concrete:** Steel
14. **Pipe Insulated:** No

Wayne Aregood
Prepared By:

Jeff Suter
Reviewed By:

Walkdown Comments:

Slab thickness based on C-1C1311.

Sketch:

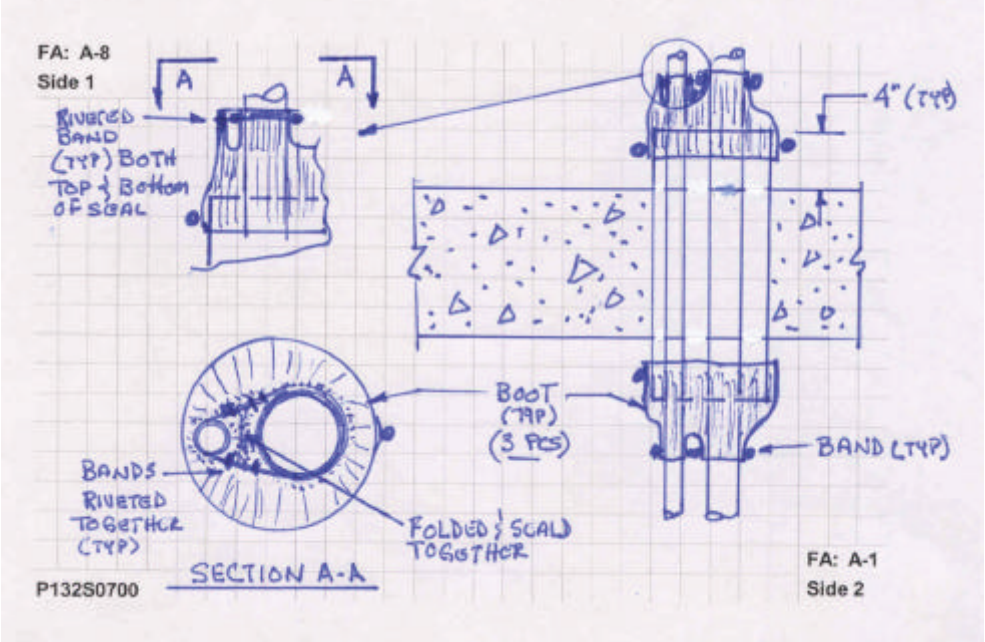

Penetration Seal Data

Appendix: B8

Photos: P132S0700

Fire Area A-8 (Side 1)

Fire Area A-8 (Side 1)

Fire Area A-1 (Side 2)

Fire Area A-1 (Side 2)

Penetration Seal Data

Appendix: B8

Heat Affected Zone Review: P132S0700

Fire Area (Side 1) A-8

1. 1-1/2" System Drain Pipe, No issue

Fire Area (Side 2) A-1

No issues within Heat Affected Zone

Review Distances

(Reference M-663-00017A, Figure 7.2.3-1)

3" Pipe			
L1 & L2 Dist. (ft)	Temp. (°F)	R1 Radius (in)	R2 Radius (in)
0.5	1607	4.1	5.4
1	1344	2.9	4.3
1.5	1126	1.9	3.3
2	945	1.1	2.5
2.5	795	0.4	1.8
3	671	Contact	1.2
3.5	568		0.8
4	483		0.4
4.5	412		0.1
5	354		Contact

Side 1 Photo

Side 2 Photo

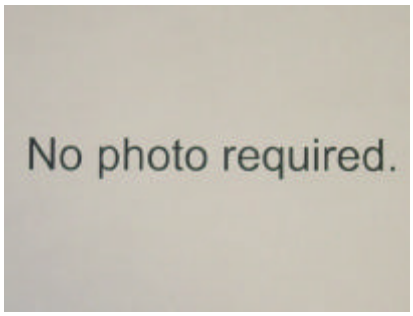

Sketch

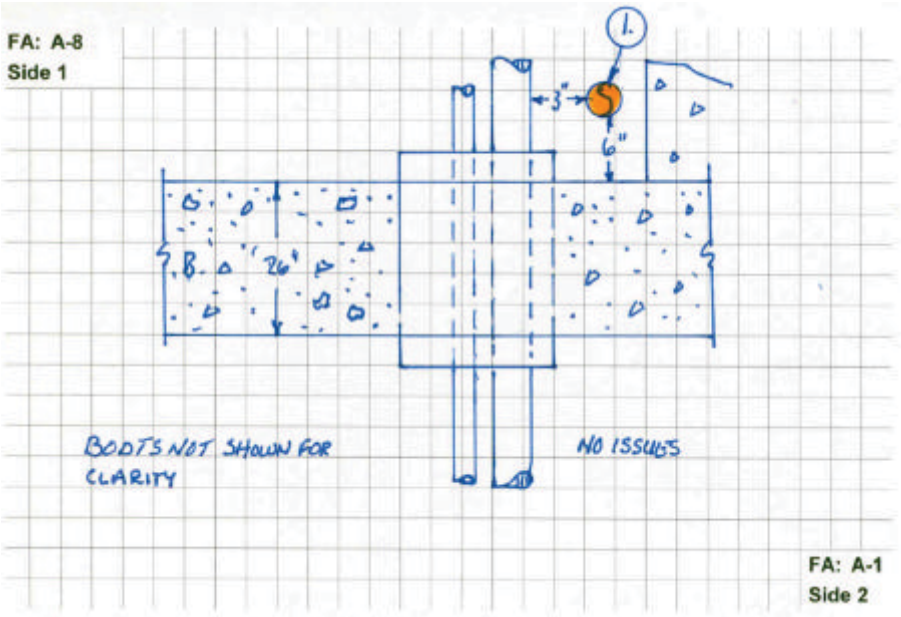

Penetration Seal Data

Appendix: B8

Penetration #: P132S0704

Penetration Type: RB-5A **Fire Area (Side 1):** A-8 **Fire Area (Side 2):** A-1

Loc./Elev.: 2000'-0" **M-0X Dwg:** M-1X1321

1. **Barrier Thickness:** 20"
2. **Opening Size:** 10"D
3. **Penetrants:** (1) 6"P
4. **Sealant Type:** HDSE/HDLE, Ceramic Fiber
5. **Damming Side1:** Boot
6. **Damming Side 2:** Boot
7. **Damming Continuity (Acc/Rej):** N/A
8. **Boot Condition (Acc/Rej):** Accept
9. **Sealant Depth:** Assumed Per Detail
10. **Annular Gap (smallest):** 1/4"
11. **Gap between pen:** N/A
12. **Barrier Type:** F R
13. **Opening Sleeved or Concrete:** Steel
14. **Pipe Insulated:** No

Wayne Aregood
Prepared By:

Jeff Suter
Reviewed By:

Walkdown Comments:

Slab thickness based on C-1C1311. Top side in VCT Room

Sketch:

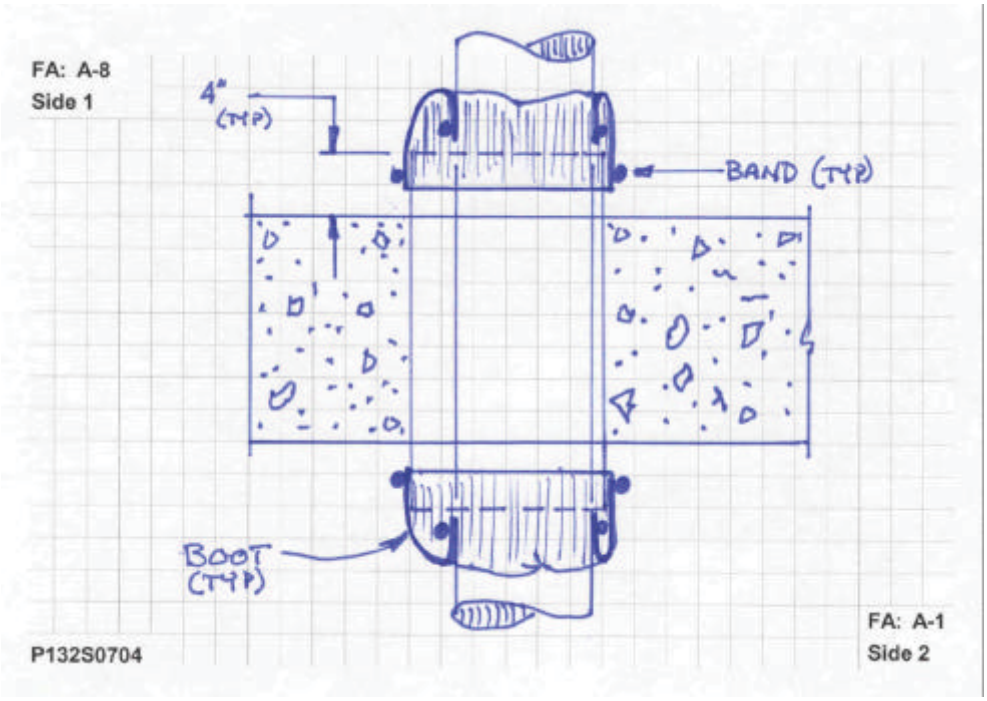

Penetration Seal Data

Appendix: B8

Photos: P132S0704

Fire Area A-8 (Side 1)

Fire Area A-8 (Side 1)

Fire Area A-1 (Side 2)

Fire Area A-1 (Side 2)

Penetration Seal Data

Appendix: B8

Heat Affected Zone Review: P132S0704

Fire Area (Side 1) A-8

No issues within Heat Affected Zone

Fire Area (Side 2) A-1

No issues within Heat Affected Zone

Review Distances

(Reference M-663-00017A, Figure 7.2.3-1)

6" Pipe			
L1 & L2 Dist. (ft)	Temp. (°F)	R1 Radius (in)	R2 Radius (in)
0.5	1659	4.3	5.7
1	1431	3.3	4.6
1.5	1236	2.4	3.8
2	1069	1.7	3
2.5	925	1	2.4
3	803	0.5	1.8
3.5	698	Contact	1.3
4	608		0.9
4.5	531		0.6
5	464		0.3
5.5	408		0
6	359		Contact

Side 1 Photo

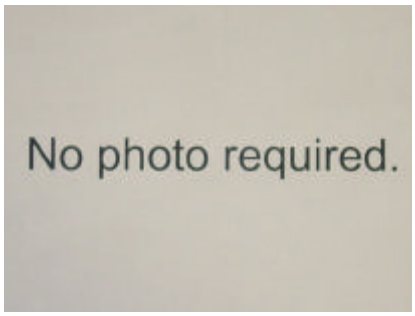

Side 2 Photo

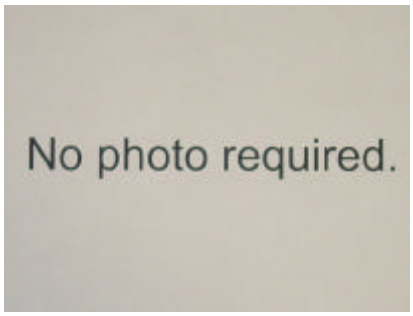

Sketch

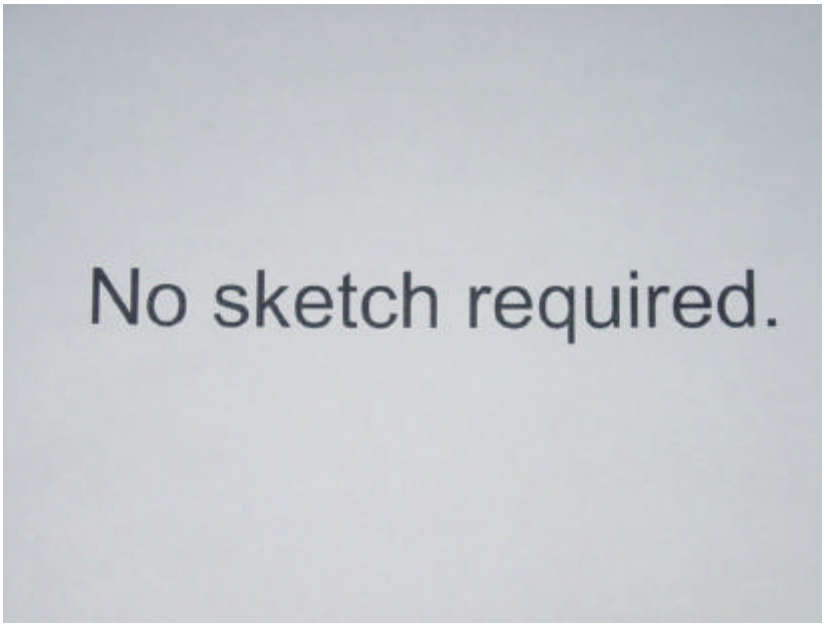

Penetration Seal Data

Appendix: B8

Penetration #: P132S0710

Penetration Type: RB-5A **Fire Area (Side 1):** A-8 **Fire Area (Side 2):** A-1

Loc./Elev.: 2000'-0" **M-0X Dwg:** M-1X1321

1. **Barrier Thickness:** 26"
2. **Opening Size:** 8"D
3. **Penetrants:** (1) 3"P
4. **Sealant Type:** HDSE/HDLE, Ceramic Fiber
5. **Damming Side1:** Boot
6. **Damming Side 2:** Boot
7. **Damming Continuity (Acc/Rej):** N/A
8. **Boot Condition (Acc/Rej):** Accept
9. **Sealant Depth:** Assumed Per Detail
10. **Annular Gap (smallest):** 1-1/4"
11. **Gap between pen:** N/A
12. **Barrier Type:** F R
13. **Opening Sleeved or Concrete:** Steel
14. **Pipe Insulated:** Yes

Wayne Aregood
Prepared By:

Jeff Suter
Reviewed By:

Walkdown Comments:
Slab thickness based on C-1C1311.

Sketch:

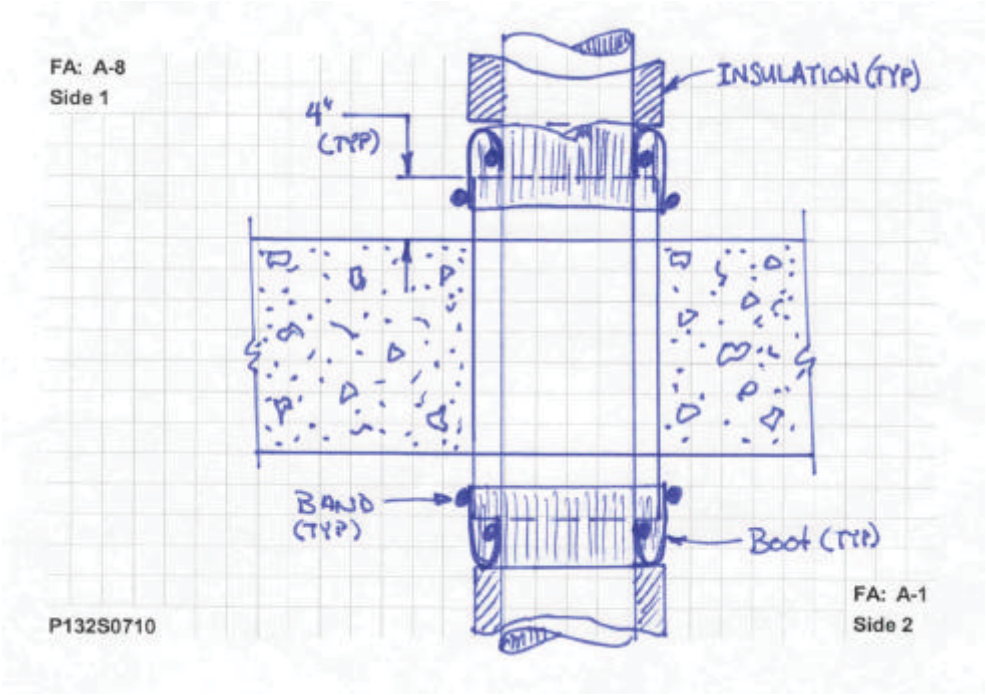

Penetration Seal Data

Appendix: B8

Photos: P132S0710

Fire Area A-8 (Side 1)

Fire Area A-8 (Side 1)

Fire Area A-1 (Side 2)

Fire Area A-1 (Side 2)

Penetration Seal Data

Appendix: B8

Heat Affected Zone Review: P132S0710

Fire Area (Side 1) A-8

No issues within Heat Affected Zone

Fire Area (Side 2) A-1

No issues within Heat Affected Zone

Review Distances

(Reference M-663-00017A, Figure 7.2.3-1)

3" Pipe			
L1 & L2 Dist. (ft)	Temp. (°F)	R1 Radius (in)	R2 Radius (in)
0.5	1607	4.1	5.4
1	1344	2.9	4.3
1.5	1126	1.9	3.3
2	945	1.1	2.5
2.5	795	0.4	1.8
3	671	Contact	1.2
3.5	568		0.8
4	483		0.4
4.5	412		0.1
5	354		Contact

Side 1 Photo

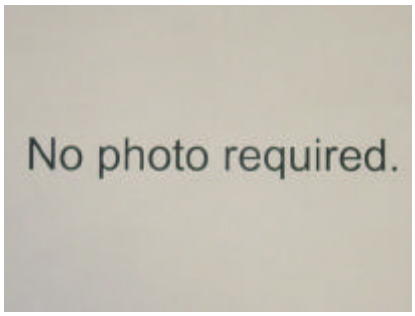

Side 2 Photo

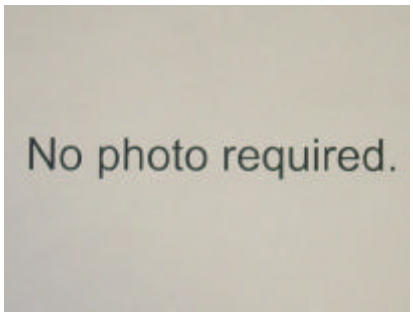

Sketch

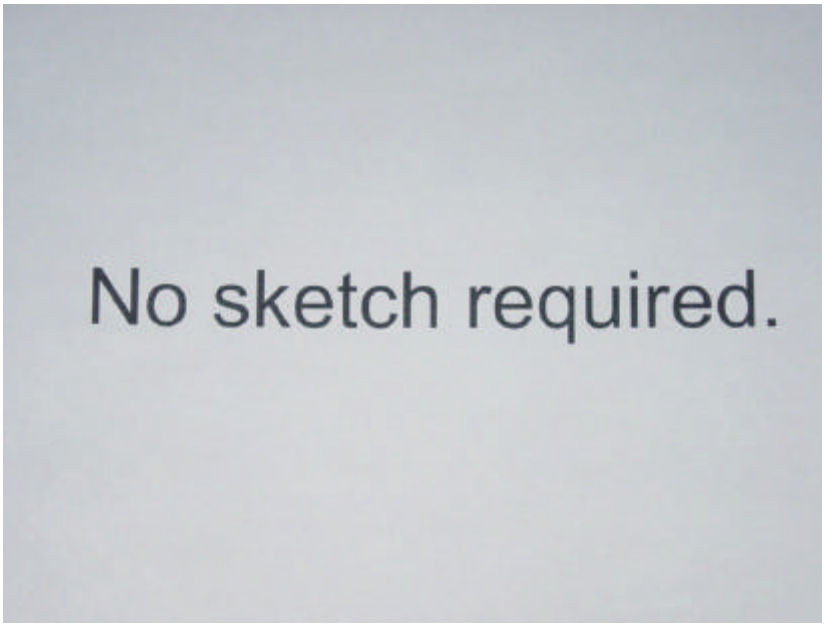

Penetration Seal Data

Appendix: B8

Penetration #: P132S0713

Penetration Type: RB-5A **Fire Area (Side 1):** A-8 **Fire Area (Side 2):** A-1

Loc./Elev.: 2000'-0" **M-0X Dwg:** M-1X1321

1. **Barrier Thickness:** 26"
2. **Opening Size:** 10"D
3. **Penetrants:** (1) 3"P
4. **Sealant Type:** HDSE/HDLE, Ceramic Fiber
5. **Damming Side1:** Boot
6. **Damming Side 2:** Boot
7. **Damming Continuity (Acc/Rej):** N/A
8. **Boot Condition (Acc/Rej):** Accept
9. **Sealant Depth:** 28" **
10. **Annular Gap (smallest):** 3"
11. **Gap between pen:** N/A
12. **Barrier Type:** F R
13. **Opening Sleeved or Concrete:** Steel
14. **Pipe Insulated:** No

Wayne Aregood
Prepared By:

Jeff Suter
Reviewed By:

Walkdown Comments:

Slab thickness based on C-1C1311. ** Sealant depth determined from inspection report.

Sketch:

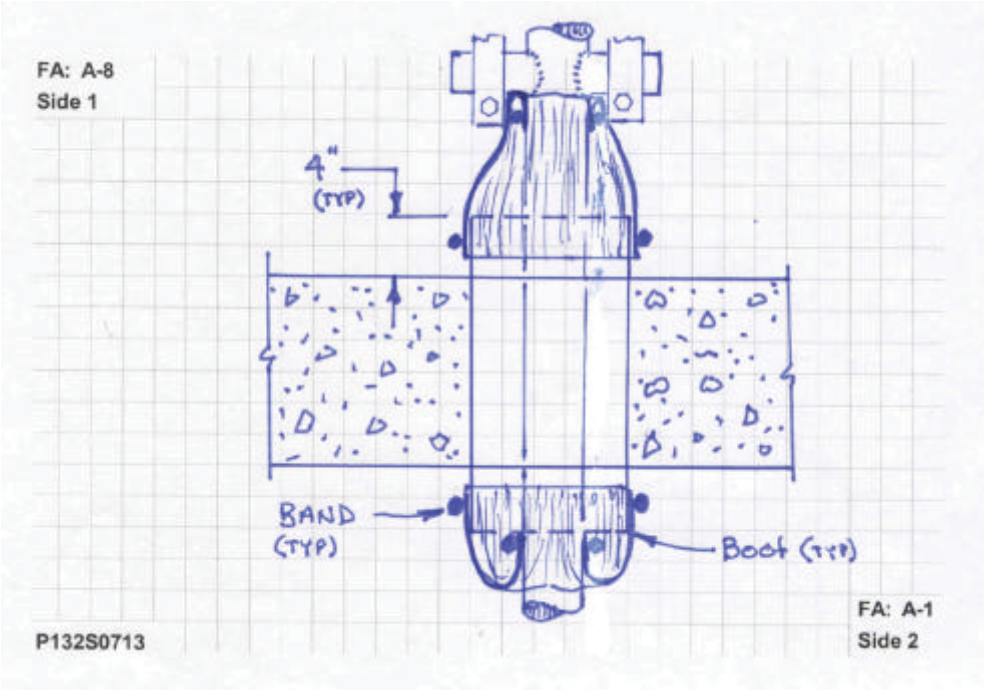

Penetration Seal Data

Appendix: B8

Photos: P132S0713

Fire Area A-8 (Side 1)

Fire Area A-8 (Side 1)

Fire Area A-1 (Side 2)

Fire Area A-1 (Side 2)

Penetration Seal Data

Appendix: B8

Heat Affected Zone Review: P132S0713

Fire Area (Side 1) A-8

No issues within Heat Affected Zone

Fire Area (Side 2) A-1

No issues within Heat Affected Zone

Review Distances

(Reference M-663-00017A, Figure 7.2.3-1)

3" Pipe			
L1 & L2 Dist. (ft)	Temp. (°F)	R1 Radius (in)	R2 Radius (in)
0.5	1607	4.1	5.4
1	1344	2.9	4.3
1.5	1126	1.9	3.3
2	945	1.1	2.5
2.5	795	0.4	1.8
3	671	Contact	1.2
3.5	568		0.8
4	483		0.4
4.5	412		0.1
5	354		Contact

Side 1 Photo

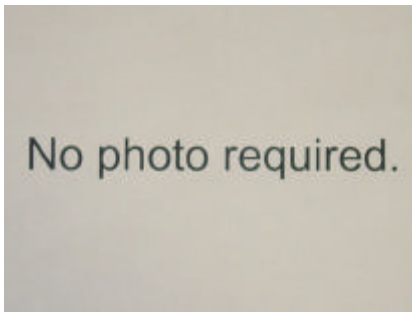

Side 2 Photo

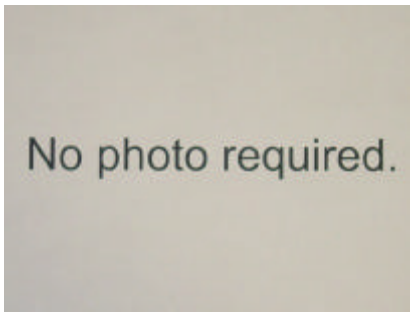

Sketch

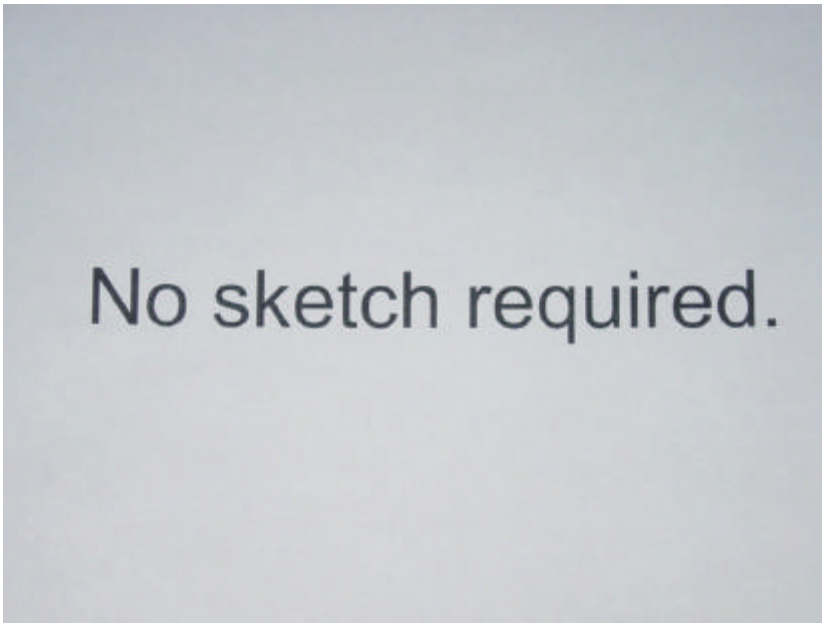

Penetration Seal Data

Appendix: B8

Penetration #: P132S0722

Penetration Type: RB-5A **Fire Area (Side 1):** A-8 **Fire Area (Side 2):** A-1

Loc./Elev.: 2000'-0" **M-0X Dwg:** M-1X1321

1. **Barrier Thickness:** 32"
2. **Opening Size:** 10"D
3. **Penetrants:** (1) 3"P
4. **Sealant Type:** HDSE/HDLE, Ceramic Fiber
5. **Damming Side1:** Boot
6. **Damming Side 2:** Boot
7. **Damming Continuity (Acc/Rej):** N/A
8. **Boot Condition (Acc/Rej):** N/A
9. **Sealant Depth:** Assumed Per Detail
10. **Annular Gap (smallest):** 3"
11. **Gap between pen:** N/A
12. **Barrier Type:** F R
13. **Opening Sleeved or Concrete:** Steel
14. **Pipe Insulated:** No

Wayne Aregood
Prepared By:

Jeff Suter
Reviewed By:

Walkdown Comments:
Slab thickness based on C-1C1311.

Sketch:

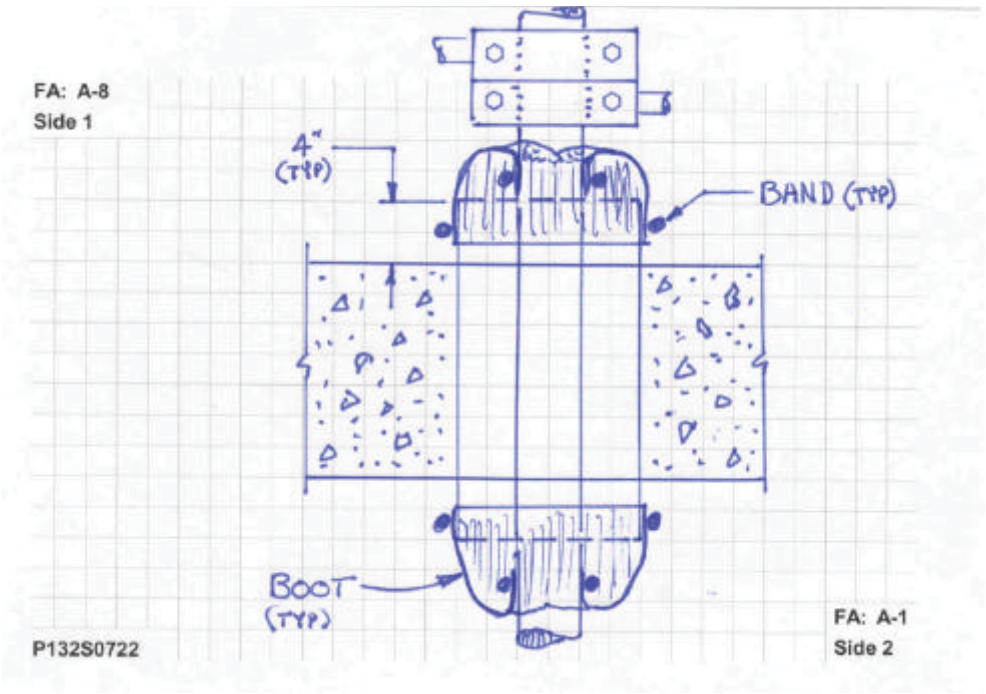

Penetration Seal Data

Appendix: B8

Photos: P132S0722

Fire Area A-8 (Side 1)

Fire Area A-8 (Side 1)

Fire Area A-1 (Side 2)

Fire Area A-1 (Side 2)

Penetration Seal Data

Appendix: B8

Heat Affected Zone Review: P132S0722

Fire Area (Side 1) A-8

No issues within Heat Affected Zone

Fire Area (Side 2) A-1

No issues within Heat Affected Zone

Review Distances

(Reference M-663-00017A, Figure 7.2.3-1)

3" Pipe			
L1 & L2 Dist. (ft)	Temp. (°F)	R1 Radius (in)	R2 Radius (in)
0.5	1607	4.1	5.4
1	1344	2.9	4.3
1.5	1126	1.9	3.3
2	945	1.1	2.5
2.5	795	0.4	1.8
3	671	Contact	1.2
3.5	568		0.8
4	483		0.4
4.5	412		0.1
5	354		Contact

Side 1 Photo

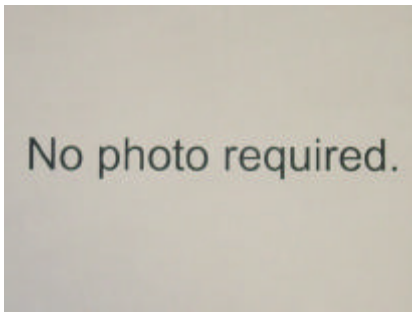

Side 2 Photo

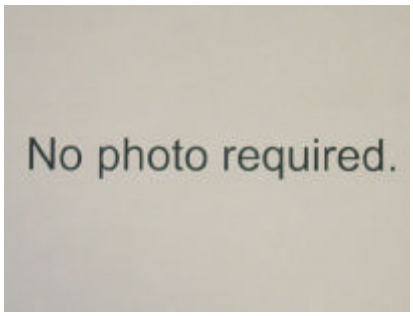

Sketch

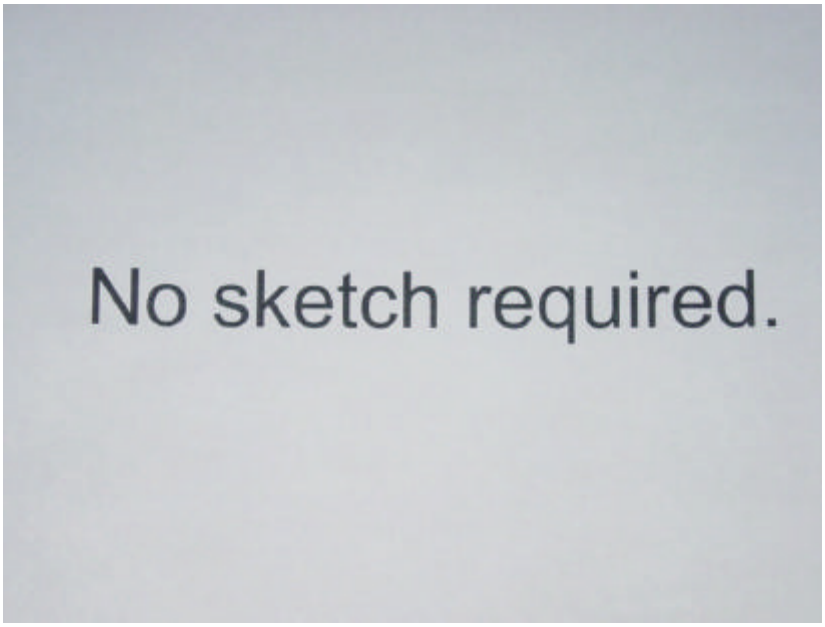

Penetration Seal Data

Appendix: B8

Penetration #: P132S0723

Penetration Type: RB-5A **Fire Area (Side 1):** A-8 **Fire Area (Side 2):** A-1

Loc./Elev.: 2000'-0" **M-0X Dwg:** M-1X1321

1. **Barrier Thickness:** 32"
2. **Opening Size:** 12"D
3. **Penetrants:** (1) 4"P
4. **Sealant Type:** HDSE/HDLE, Ceramic Fiber
5. **Damming Side1:** Boot
6. **Damming Side 2:** Boot
7. **Damming Continuity (Acc/Rej):** N/A
8. **Boot Condition (Acc/Rej):** Accept
9. **Sealant Depth:** 35" **
10. **Annular Gap (smallest):** 3-1/2"
11. **Gap between pen:** N/A
12. **Barrier Type:** F R
13. **Opening Sleeved or Concrete:** Steel
14. **Pipe Insulated:** No

Wayne Aregood
Prepared By:

Jeff Suter
Reviewed By:

Walkdown Comments:

Slab thickness based on C-1C1311. ** Sealant depth determined by inspection report.

Sketch:

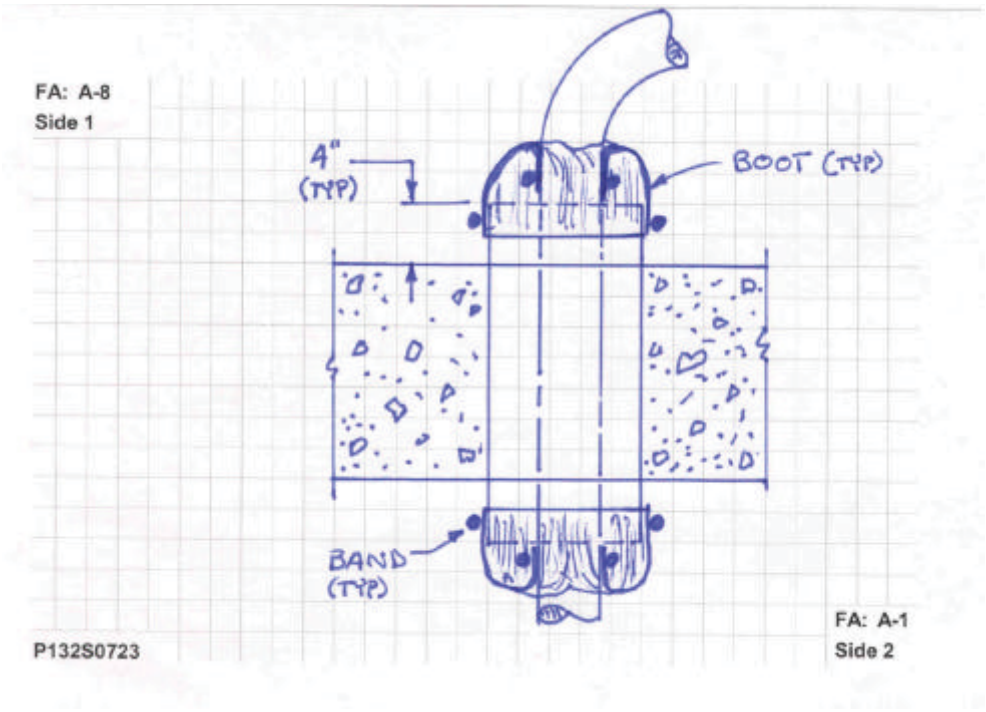

Penetration Seal Data

Appendix: B8

Photos: P132S0723

Fire Area A-8 (Side 1)

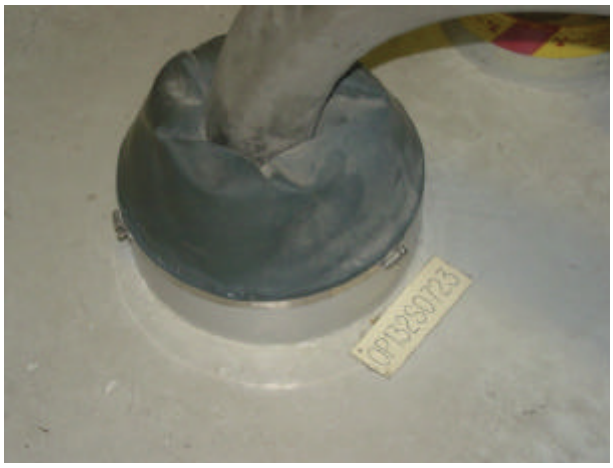

Fire Area A-8 (Side 1)

Fire Area A-1 (Side 2)

Fire Area A-1 (Side 2)

Penetration Seal Data

Appendix: B8

Heat Affected Zone Review: P132S0723

Fire Area (Side 1) A-8

No issues within Heat Affected Zone

Fire Area (Side 2) A-1

No issues within Heat Affected Zone

Review Distances

(Reference M-663-00017A, Figure 7.2.3-1)

4" Pipe			
L1 & L2 Dist. (ft)	Temp. (°F)	R1 Radius (in)	R2 Radius (in)
0.5	1625	4.2	5.5
1	1374	3	4.4
1.5	1163	2.1	3.4
2	987	1.3	2.6
2.5	839	0.6	2
3	715	0.1	1.4
3.5	610	Contact	0.9
4	523		0.6
4.5	450		0.2
5	389		Contact

Side 1 Photo

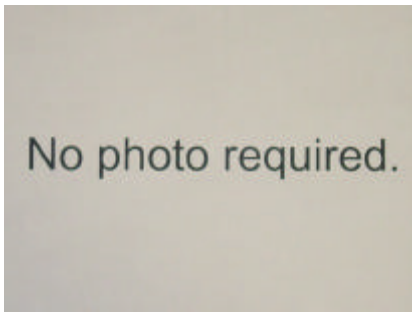

Side 2 Photo

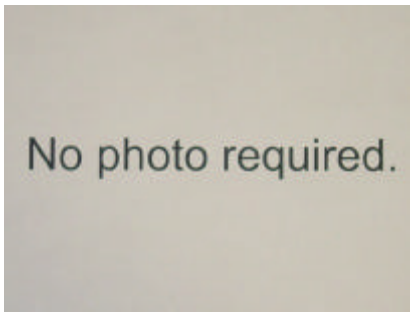

Sketch

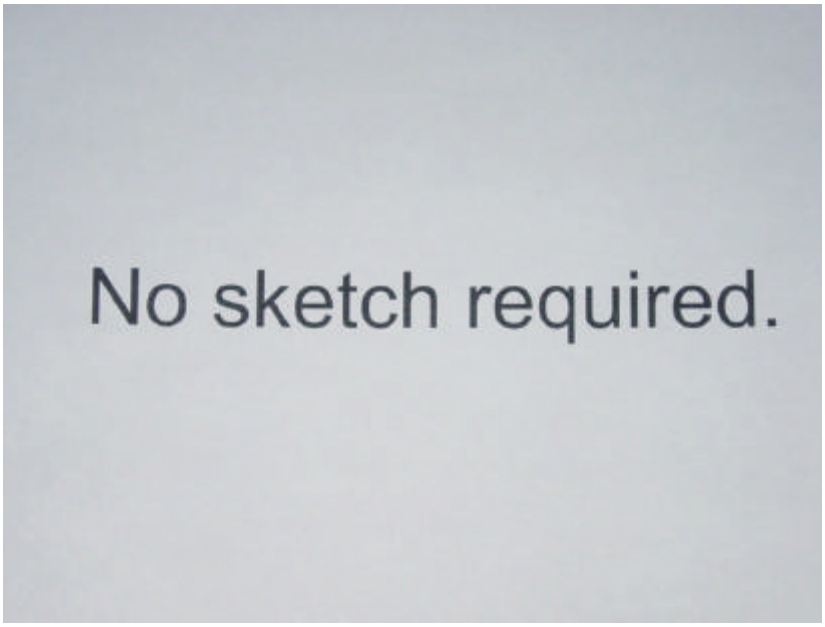

Penetration Seal Data

Appendix: B8

Penetration #: P133S0769

Penetration Type: RB-5A **Fire Area (Side 1):** A-25 **Fire Area (Side 2):** A-1

Loc./Elev.: 2000'-0" **M-0X Dwg:** M-0X1331

1. **Barrier Thickness:** 12"
2. **Opening Size:** 12"D
3. **Penetrants:** (1) 6"P
4. **Sealant Type:** HDSE/HDLE, Ceramic Fiber
5. **Damming Side1:** Boot
6. **Damming Side 2:** Boot
7. **Damming Continuity (Acc/Rej):** N/A
8. **Boot Condition (Acc/Rej):** Accept
9. **Sealant Depth:** Assumed Per Detail
10. **Annular Gap (smallest):** 1"
11. **Gap between pen:** N/A
12. **Barrier Type:** F R
13. **Opening Sleeved or Concrete:** Steel
14. **Pipe Insulated:** No

Wayne Aregood
Prepared By:

Jeff Suter
Reviewed By:

Walkdown Comments:

Slab thickness determined by Drawing C-1C1311

Sketch:

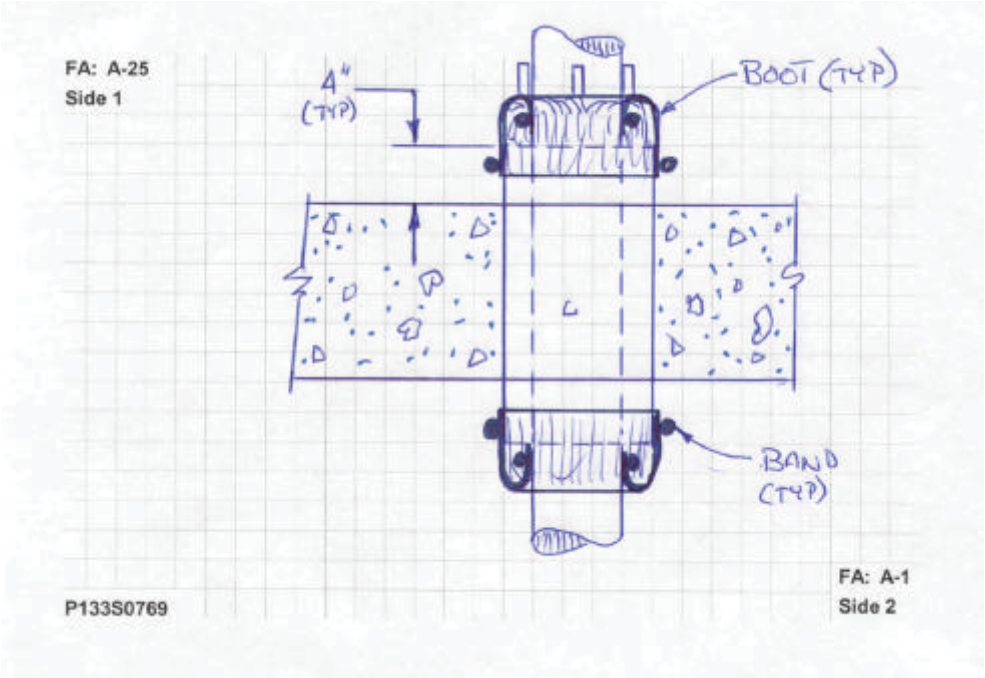

Penetration Seal Data

Appendix: B8

Photos: P133S0769

Fire Area A-25 (Side 1)

Fire Area A-25 (Side 1)

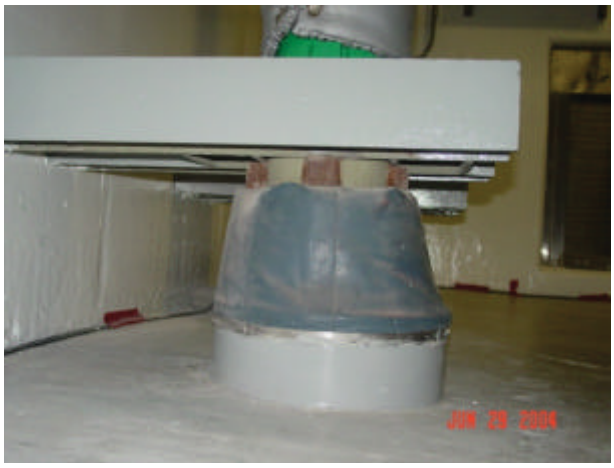

Fire Area A-1 (Side 2)

Fire Area A-1 (Side 2)

Penetration Seal Data

Appendix: B8

Heat Affected Zone Review: P133S0769

Fire Area (Side 1) A-25

No Issues within Heat Affected Zone

Fire Area (Side 2) A-1

No issues within Heat Affected Zone

Review Distances

(Reference M-663-00017A, Figure 7.2.3-1)

6" Pipe			
L1 & L2 Dist. (ft)	Temp. (°F)	R1 Radius (in)	R2 Radius (in)
0.5	1659	4.3	5.7
1	1431	3.3	4.6
1.5	1236	2.4	3.8
2	1069	1.7	3
2.5	925	1	2.4
3	803	0.5	1.8
3.5	698	Contact	1.3
4	608		0.9
4.5	531		0.6
5	464		0.3
5.5	408		0
6	359		Contact

Side 1 Photo

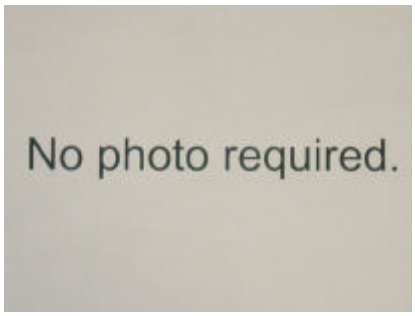

Side 2 Photo

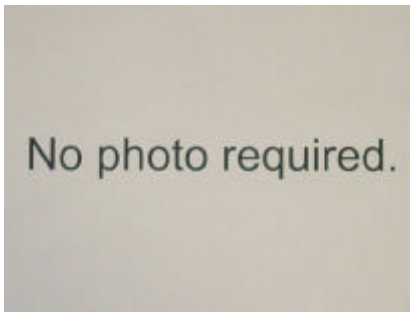

Sketch

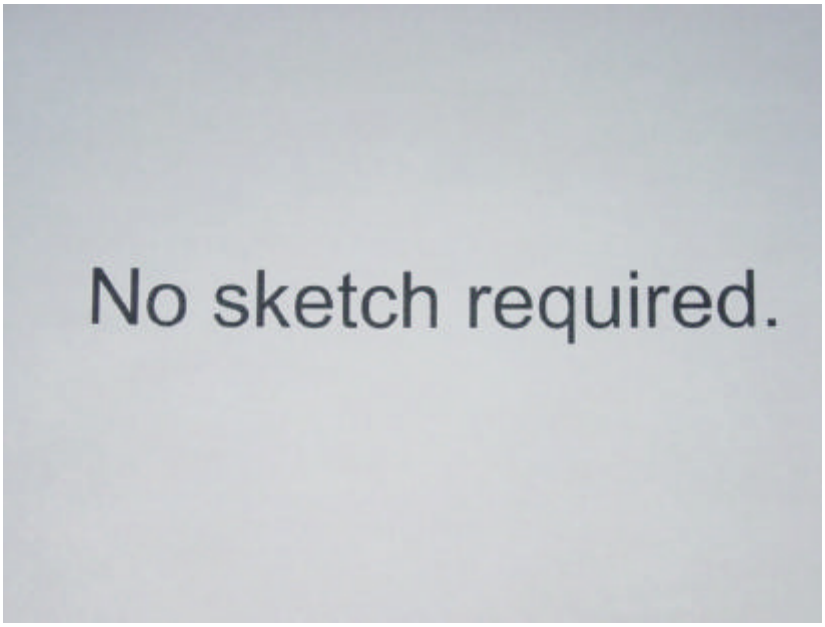

Penetration Seal Data

Appendix: B8

Penetration #: P133S0771

Penetration Type: RB-5A **Fire Area (Side 1):** A-25 **Fire Area (Side 2):** A-1

Loc./Elev.: 2000'-0" **M-0X Dwg:** M-0X1331

1. **Barrier Thickness:** 12"
2. **Opening Size:** 12"D
3. **Penetrants:** (1) 6"P
4. **Sealant Type:** HDSE/HDLE, Ceramic Fiber
5. **Damming Side1:** Boot
6. **Damming Side 2:** Boot
7. **Damming Continuity (Acc/Rej):** N/A
8. **Boot Condition (Acc/Rej):** Accept
9. **Sealant Depth:** Assumed Per Detail
10. **Annular Gap (smallest):** 2-1/2"
11. **Gap between pen:** N/A
12. **Barrier Type:** F R
13. **Opening Sleeved or Concrete:** Steel
14. **Pipe Insulated:** No

Wayne Aregood
Prepared By:

Jeff Suter
Reviewed By:

Walkdown Comments:

Slab thickness determined by Drawing C-1C1311

Sketch:

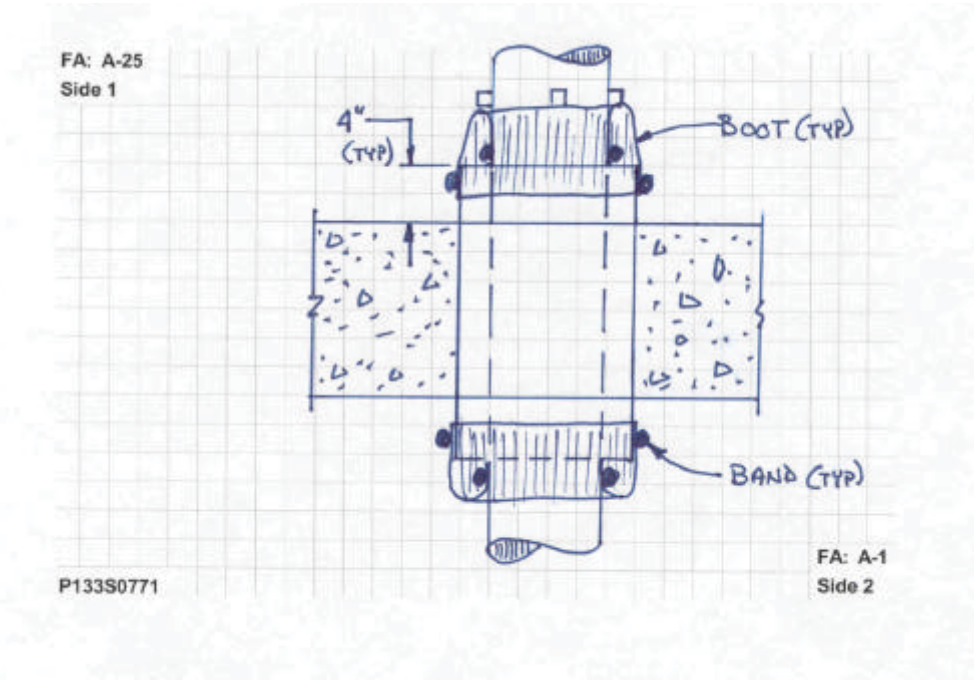

Penetration Seal Data

Appendix: B8

Photos: P133S0771

Fire Area A-25 (Side 1)

Fire Area A-25 (Side 1)

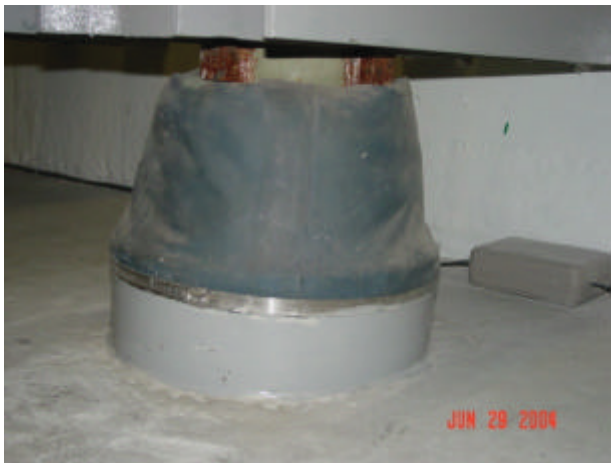

Fire Area A-1 (Side 2)

Fire Area A-1 (Side 2)

Penetration Seal Data

Appendix: B8

Heat Affected Zone Review: P133S0771

Fire Area (Side 1) A-25

No issues within Heat Affected Zone

Fire Area (Side 2) A-1

No issues within Heat Affected Zone

Review Distances

(Reference M-663-00017A, Figure 7.2.3-1)

6" Pipe			
L1 & L2 Dist. (ft)	Temp. (°F)	R1 Radius (in)	R2 Radius (in)
0.5	1659	4.3	5.7
1	1431	3.3	4.6
1.5	1236	2.4	3.8
2	1069	1.7	3
2.5	925	1	2.4
3	803	0.5	1.8
3.5	698	Contact	1.3
4	608		0.9
4.5	531		0.6
5	464		0.3
5.5	408		0
6	359		Contact

Side 1 Photo

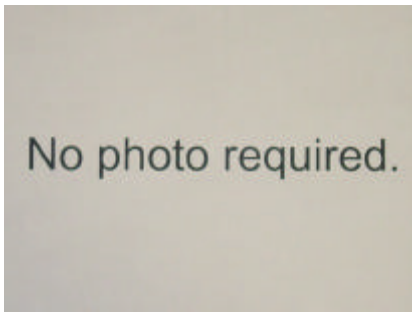

Side 2 Photo

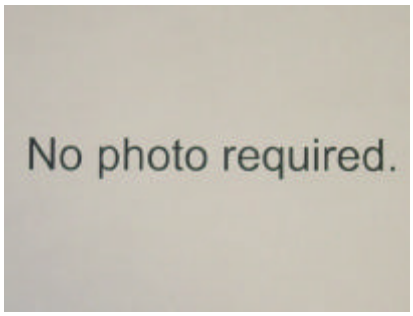

Sketch

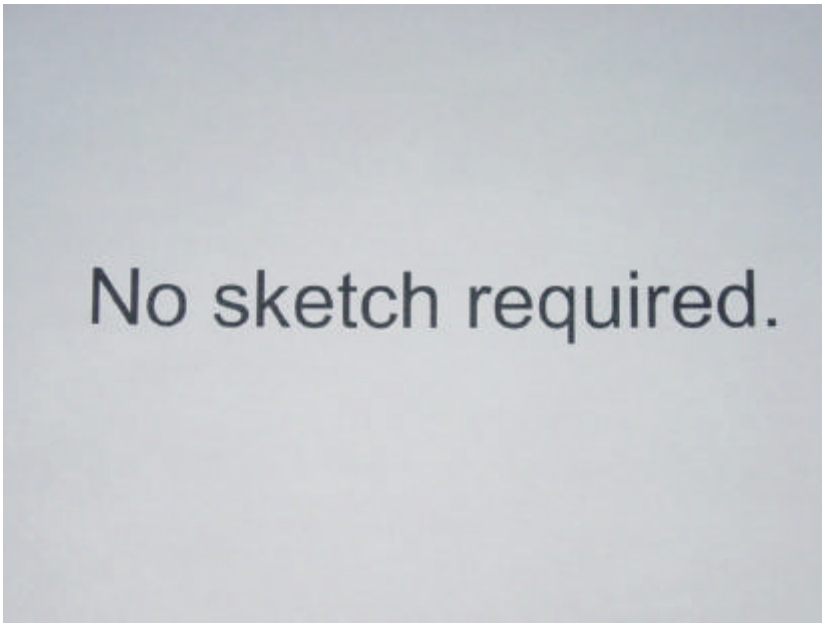

Penetration Seal Data

Appendix: B8

Penetration #: P133S0793

Penetration Type: RB-5A **Fire Area (Side 1):** A-25 **Fire Area (Side 2):** A-1

Loc./Elev.: 2000'-0" **M-0X Dwg:** M-0X1331

1. **Barrier Thickness:** 12"
2. **Opening Size:** 14"D
3. **Penetrants:** (1) 4"P
4. **Sealant Type:** HDSE/HDLE, Ceramic Fiber
5. **Damming Side1:** Boot
6. **Damming Side 2:** Boot
7. **Damming Continuity (Acc/Rej):** N/A
8. **Boot Condition (Acc/Rej):** Accept
9. **Sealant Depth:** Assumed Per Detail
10. **Annular Gap (smallest):** 4"
11. **Gap between pen:** N/A
12. **Barrier Type:** F R
13. **Opening Sleeved or Concrete:** Steel
14. **Pipe Insulated:** No

Wayne Aregood
Prepared By:

Jeff Suter
Reviewed By:

Walkdown Comments:

Slab thickness determined by Drawing C-1C1311

Sketch:

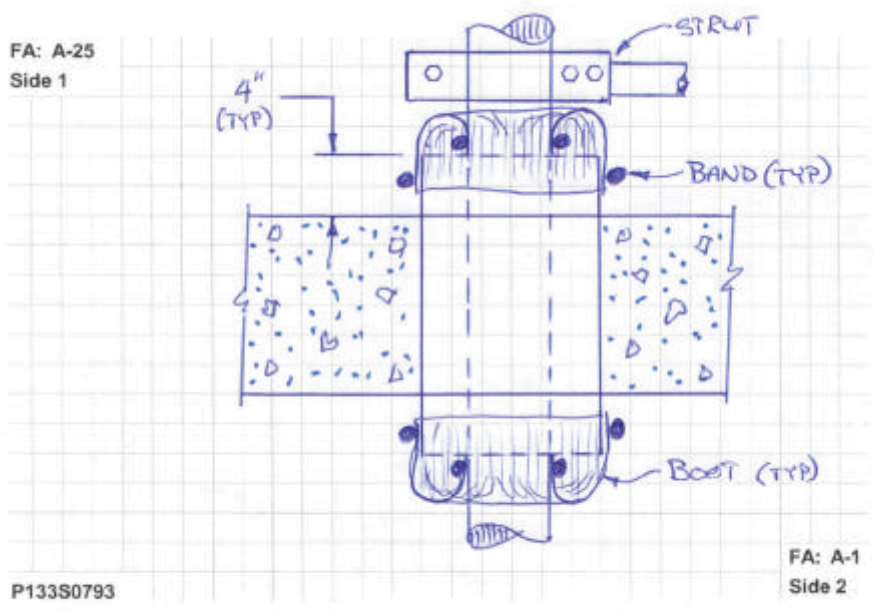

Penetration Seal Data

Appendix: B8

Photos: P133S0793

Fire Area A-25 (Side 1)

Fire Area A-25 (Side 1)

Fire Area A-1 (Side 2)

Fire Area A-1 (Side 2)

Penetration Seal Data

Appendix: B8

Heat Affected Zone Review: P133S0793

Fire Area (Side 1) A-25

No issues within Heat Affected Zone

Fire Area (Side 2) A-1

1. 1/2" Lighting Cond. Within Heat Affected Zone, not an issue.

Review Distances

(Reference M-663-00017A, Figure 7.2.3-1)

4" Pipe			
L1 & L2 Dist. (ft)	Temp. (°F)	R1 Radius (in)	R2 Radius (in)
0.5	1625	4.2	5.5
1	1374	3	4.4
1.5	1163	2.1	3.4
2	987	1.3	2.6
2.5	839	0.6	2
3	715	0.1	1.4
3.5	610	Contact	0.9
4	523		0.6
4.5	450		0.2
5	389		Contact

Side 1 Photo

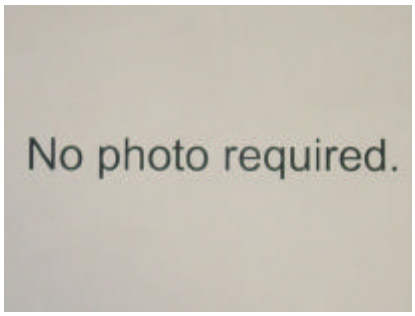

Side 2 Photo

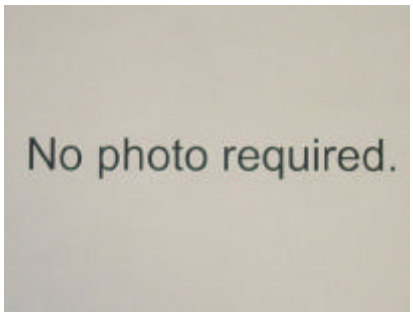

Sketch

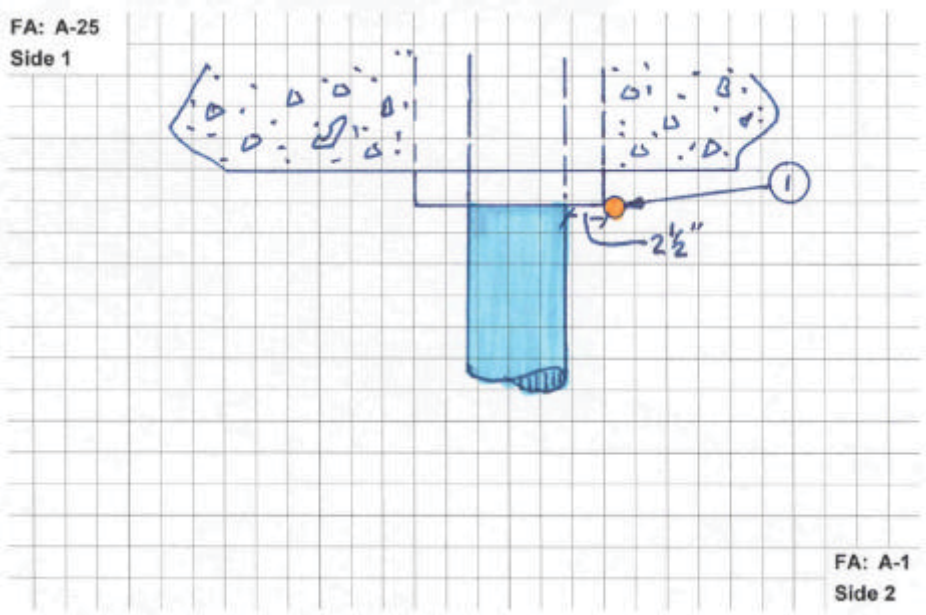

Penetration Seal Data

Appendix: B8

Penetration #: P133S0800

Penetration Type: RB-5A **Fire Area (Side 1):** A-25 **Fire Area (Side 2):** A-1

Loc./Elev.: 2000'-0" **M-0X Dwg:** M-0X1331

1. **Barrier Thickness:** 12"
2. **Opening Size:** 14"D
3. **Penetrants:** (1) 4"P
4. **Sealant Type:** HDSE/HDLE, Ceramic Fiber
5. **Damming Side1:** Boot
6. **Damming Side 2:** Boot
7. **Damming Continuity (Acc/Rej):** N/A
8. **Boot Condition (Acc/Rej):** Accept
9. **Sealant Depth:** 13-1/2" **
10. **Annular Gap (smallest):** 2-1/2"
11. **Gap between pen:** N/A
12. **Barrier Type:** F R
13. **Opening Sleeved or Concrete:** Steel
14. **Pipe Insulated:** No

Wayne Aregood
Prepared By:

Jeff Suter
Reviewed By:

Walkdown Comments:

Slab thickness determined by Drawing C-1C1311. ** Sealant depth determined by inspection report.

Sketch:

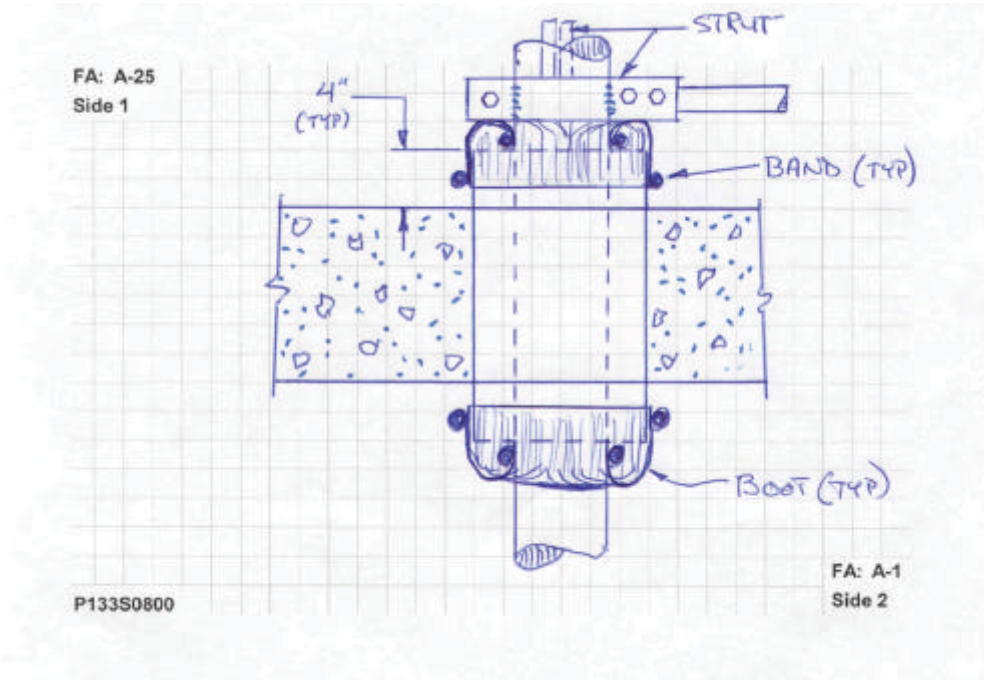

Penetration Seal Data

Appendix: B8

Photos: P133S0800

Fire Area A-25 (Side 1)

Fire Area A-25 (Side 1)

Fire Area A-1 (Side 2)

Fire Area A-1 (Side 2)

Penetration Seal Data

Appendix: B8

Heat Affected Zone Review: P133S0800

Fire Area (Side 1) A-25

No issues within Heat Affected Zone

Fire Area (Side 2) A-1

No issues within heat affected zone

Review Distances

(Reference M-663-00017A, Figure 7.2.3-1)

4" Pipe			
L1 & L2 Dist. (ft)	Temp. (°F)	R1 Radius (in)	R2 Radius (in)
0.5	1625	4.2	5.5
1	1374	3	4.4
1.5	1163	2.1	3.4
2	987	1.3	2.6
2.5	839	0.6	2
3	715	0.1	1.4
3.5	610	Contact	0.9
4	523		0.6
4.5	450		0.2
5	389		Contact

Side 1 Photo

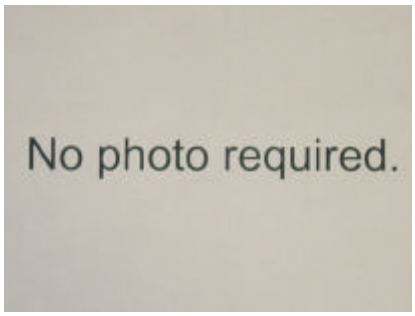

Side 2 Photo

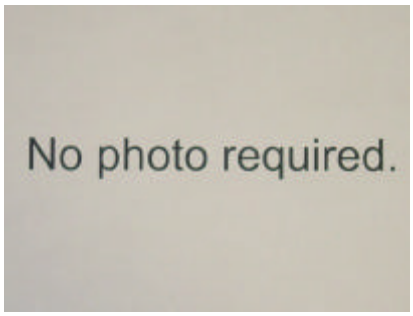

Sketch

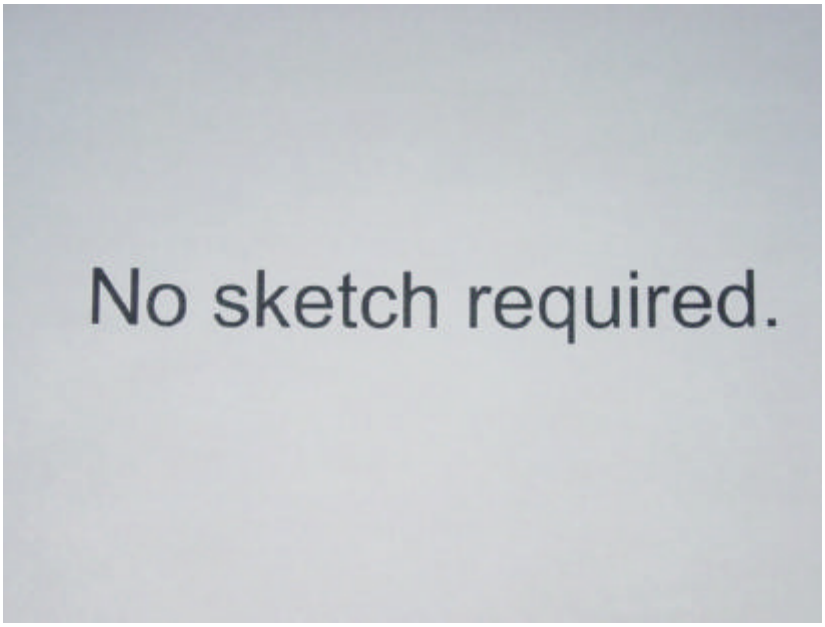

Penetration Seal Data

Appendix: B8

Penetration #: P133S0801

Penetration Type: RB-5A **Fire Area (Side 1):** A-25 **Fire Area (Side 2):** A-1

Loc./Elev.: 2000'-0" **M-0X Dwg:** M-0X1331

1. **Barrier Thickness:** 12"
2. **Opening Size:** 8"D
3. **Penetrants:** (1) 4"P
4. **Sealant Type:** HDSE/HDLE, Ceramic Fiber
5. **Damming Side1:** Boot
6. **Damming Side 2:** Boot
7. **Damming Continuity (Acc/Rej):** N/A
8. **Boot Condition (Acc/Rej):** Accept
9. **Sealant Depth:** 14-1/4" **
10. **Annular Gap (smallest):** 1"
11. **Gap between pen:** N/A
12. **Barrier Type:** F R
13. **Opening Sleeved or Concrete:** Steel
14. **Pipe Insulated:** No

Wayne Aregood
Prepared By:

Jeff Suter
Reviewed By:

Walkdown Comments:

Slab thickness determined by Drawing C-1C1311. ** Sealant depth determined by inspection report.

Sketch:

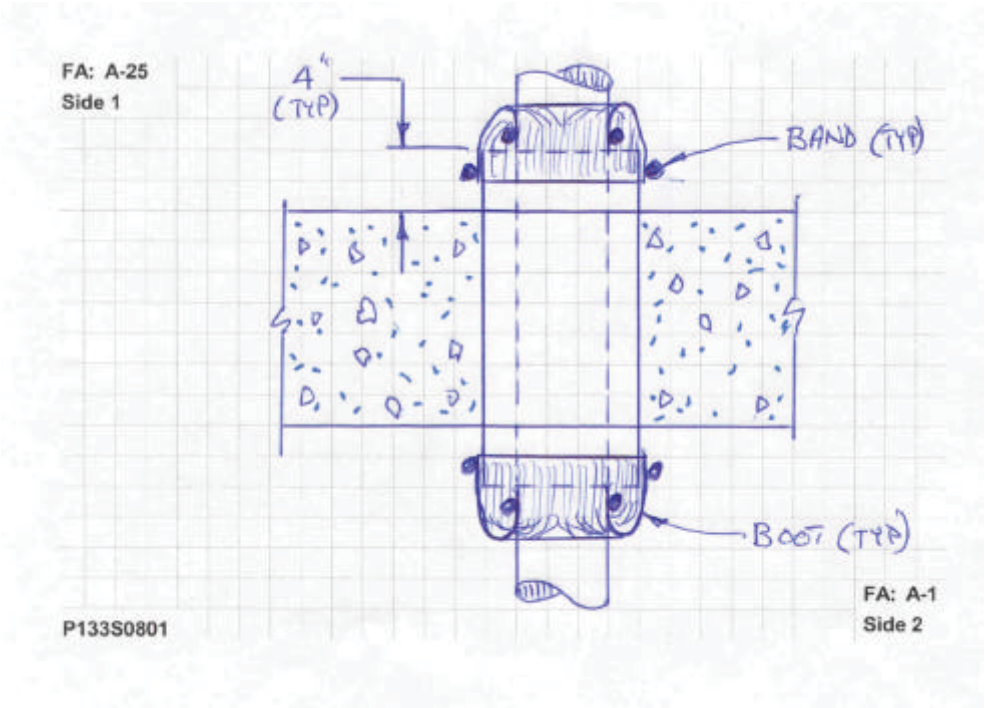

Penetration Seal Data

Appendix: B8

Photos: P133S0801

Fire Area A-25 (Side 1)

Fire Area A-25 (Side 1)

Fire Area A-1 (Side 2)

Fire Area A-1 (Side 2)

Penetration Seal Data

Appendix: B8

Heat Affected Zone Review: P133S0801

Fire Area (Side 1) A-25

No issues within Heat Affected Zone

Fire Area (Side 2) A-1

No issues within Heat Affected Zone

Review Distances

(Reference M-663-00017A, Figure 7.2.3-1)

4" Pipe			
L1 & L2 Dist. (ft)	Temp. (°F)	R1 Radius (in)	R2 Radius (in)
0.5	1625	4.2	5.5
1	1374	3	4.4
1.5	1163	2.1	3.4
2	987	1.3	2.6
2.5	839	0.6	2
3	715	0.1	1.4
3.5	610	Contact	0.9
4	523		0.6
4.5	450		0.2
5	389		Contact

Side 1 Photo

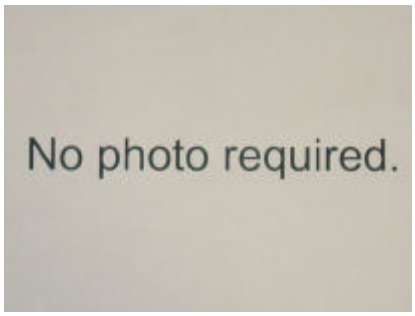

Side 2 Photo

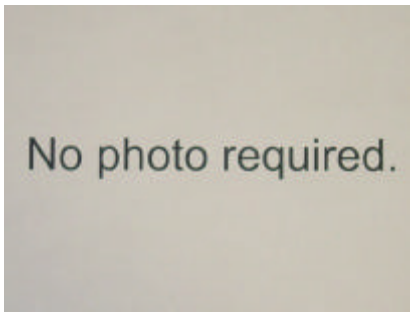

Sketch

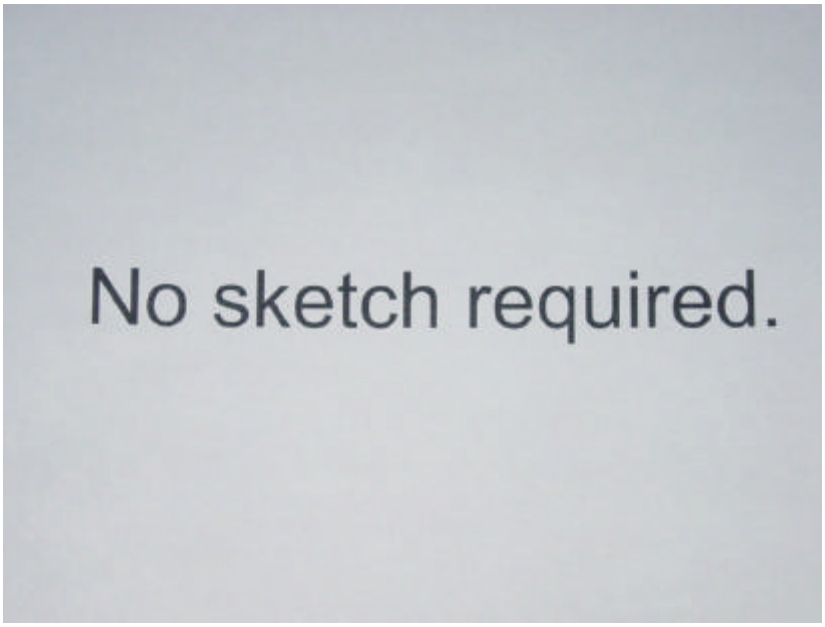

Penetration Seal Data

Appendix: B8

Penetration #: P133S0802

Penetration Type: RB-5A **Fire Area (Side 1):** A-25 **Fire Area (Side 2):** A-1

Loc./Elev.: 2000'-0" **M-0X Dwg:** M-0X1331

1. **Barrier Thickness:** 12"
2. **Opening Size:** 10"D
3. **Penetrants:** (1) 6"P
4. **Sealant Type:** HDSE/HDLE, Ceramic Fiber
5. **Damming Side1:** Boot
6. **Damming Side 2:** Boot
7. **Damming Continuity (Acc/Rej):** N/A
8. **Boot Condition (Acc/Rej):** Accept
9. **Sealant Depth:** 15" **
10. **Annular Gap (smallest):** 1-1/2"
11. **Gap between pen:** N/A
12. **Barrier Type:** F R
13. **Opening Sleeved or Concrete:** Steel
14. **Pipe Insulated:** No

Wayne Aregood
Prepared By:

Jeff Suter
Reviewed By:

Walkdown Comments:

Slab thickness determined by Drawing C-1C1311. ** Sealant depth determined by inspection report.

Sketch:

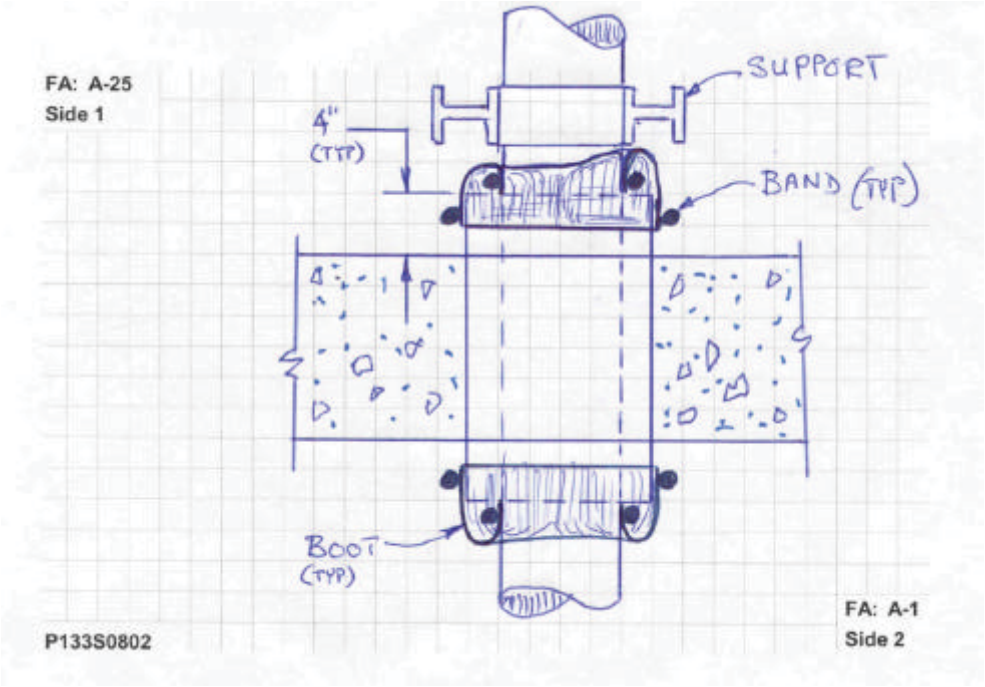

Penetration Seal Data

Appendix: B8

Photos: P133S0802

Fire Area A-25 (Side 1)

Fire Area A-25 (Side 1)

Fire Area A-1 (Side 2)

Fire Area A-1 (Side 2)

Penetration Seal Data

Appendix: B8

Heat Affected Zone Review: P133S0802

Fire Area (Side 1) A-25

No issues within Heat Affected Zone

Fire Area (Side 2) A-1

No issues within Heat Affected Zone

Review Distances

(Reference M-663-00017A, Figure 7.2.3-1)

6" Pipe			
L1 & L2 Dist. (ft)	Temp. (°F)	R1 Radius (in)	R2 Radius (in)
0.5	1659	4.3	5.7
1	1431	3.3	4.6
1.5	1236	2.4	3.8
2	1069	1.7	3
2.5	925	1	2.4
3	803	0.5	1.8
3.5	698	Contact	1.3
4	608		0.9
4.5	531		0.6
5	464		0.3
5.5	408		0
6	359		Contact

Side 1 Photo

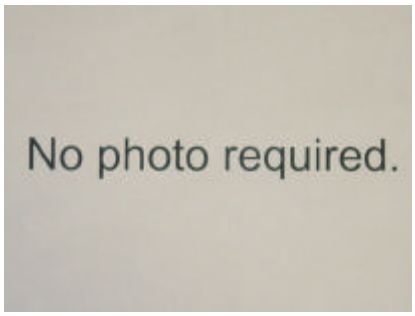

Side 2 Photo

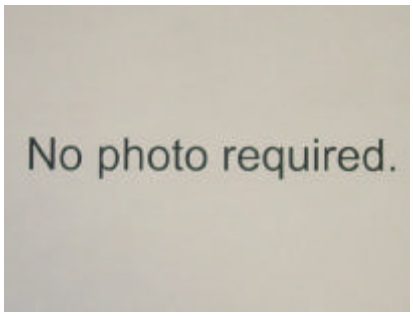

Sketch

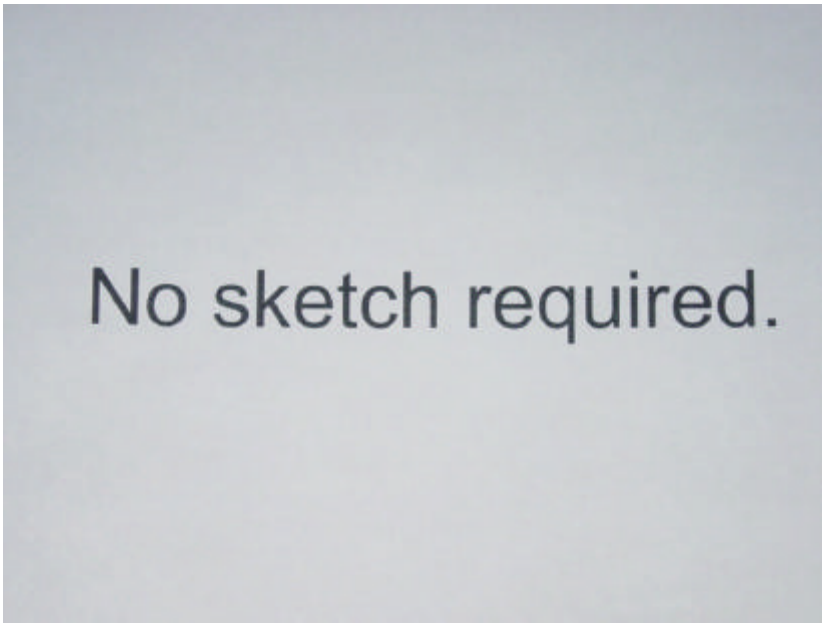

Penetration Seal Data

Appendix: B8

Penetration #: P133S0810

Penetration Type: RB-5A **Fire Area (Side 1):** A-25 **Fire Area (Side 2):** A-1

Loc./Elev.: 2000'-0" **M-0X Dwg:** M-0X1331

1. **Barrier Thickness:** 12"
2. **Opening Size:** 24"D
3. **Penetrants:** (1) 10"P
4. **Sealant Type:** HDSE/HDLE, Ceramic Fiber
5. **Damming Side1:** Boot
6. **Damming Side 2:** Boot
7. **Damming Continuity (Acc/Rej):** N/A
8. **Boot Condition (Acc/Rej):** Accept
9. **Sealant Depth:** 13" **
10. **Annular Gap (smallest):** 5"
11. **Gap between pen:** N/A
12. **Barrier Type:** F R
13. **Opening Sleeved or Concrete:** Steel
14. **Pipe Insulated:** Yes

Wayne Aregood
Prepared By:

Jeff Suter
Reviewed By:

Walkdown Comments:

Slab thickness determined by Drawing C-1C1311. ** Sealant depth determined by inspection report.

Sketch:

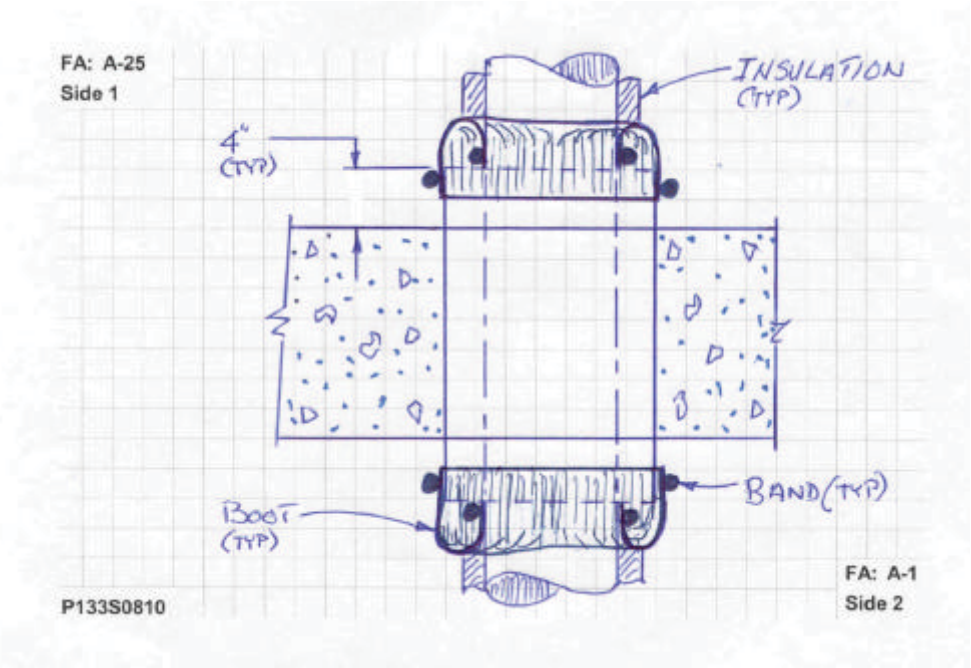

Penetration Seal Data

Appendix: B8

Photos: P133S0810

Fire Area A-25 (Side 1)

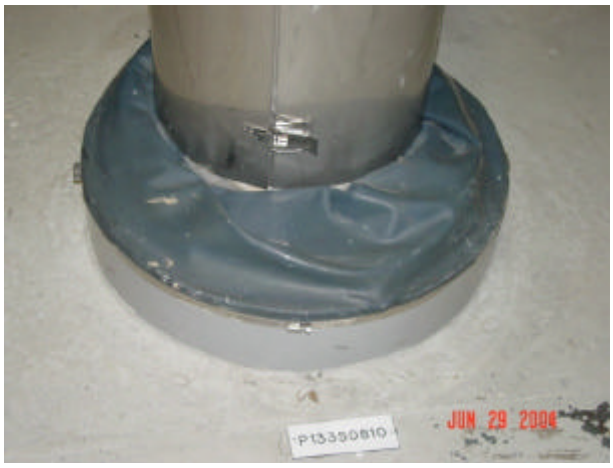

Fire Area A-25 (Side 1)

Fire Area A-1 (Side 2)

Fire Area A-1 (Side 2)

Penetration Seal Data

Appendix: B8

Heat Affected Zone Review: P133S0810

Fire Area (Side 1) A-25

No issues within heat affected zone

Fire Area (Side 2) A-1

No issues within Heat Affected Zone

Review Distances

(Reference M-663-00017A, Figure 7.2.3-1)

10" Pipe			
L1 & L2 Dist. (ft)	Temp. (°F)	R1 Radius (in)	R2 Radius (in)
0.5	1697	4.5	5.8
1	1497	3.6	4.9
1.5	1321	2.8	4.1
2	1167	2.1	3.5
2.5	1032	1.5	2.8
3	914	1	2.3
3.5	810	0.5	1.8
4	719	0.1	1.4
4.5	639	Contact	1.1
5	569		0.8
5.5	508		0.5
6	454		0.2
6.5	406		0
7	365		Contact

Side 1 Photo

No photo required.

Side 2 Photo

No photo required.

Sketch

No sketch required.

Penetration Seal Data

Appendix: B8

Penetration #: P133S0820

Penetration Type: RB-5A **Fire Area (Side 1):** A-25 **Fire Area (Side 2):** A-1

Loc./Elev.: 2000'-0" **M-0X Dwg:** M-0X1331

1. **Barrier Thickness:** 12"
2. **Opening Size:** 24"D
3. **Penetrants:** (1) 10"P
4. **Sealant Type:** HDSE/HDLE, Ceramic Fiber
5. **Damming Side1:** Boot
6. **Damming Side 2:** Boot
7. **Damming Continuity (Acc/Rej):** N/A
8. **Boot Condition (Acc/Rej):** Accept
9. **Sealant Depth:** Assumed Per Detail
10. **Annular Gap (smallest):** 6"
11. **Gap between pen:** N/A
12. **Barrier Type:** F R
13. **Opening Sleeved or Concrete:** Steel
14. **Pipe Insulated:** Yes

Wayne Aregood
Prepared By:

Jeff Suter
Reviewed By:

Walkdown Comments:

Slab thickness determined by Drawing C-1C1311

Sketch:

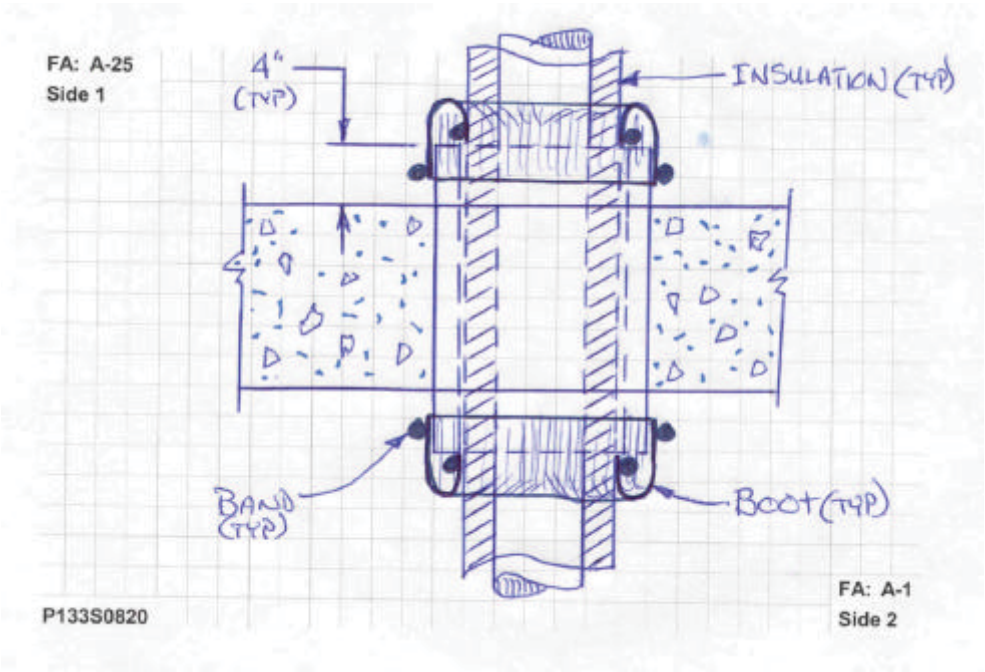

Penetration Seal Data

Appendix: B8

Photos: P133S0820

Fire Area A-25 (Side 1)

Fire Area A-25 (Side 1)

Fire Area A-1 (Side 2)

Fire Area A-1 (Side 2)

Penetration Seal Data

Appendix: B8

Heat Affected Zone Review: P133S0820

Fire Area (Side 1) A-25

No issues within Heat Affected Zone

Fire Area (Side 2) A-1

No issues within Heat Affected Zone

Review Distances

(Reference M-663-00017A, Figure 7.2.3-1)

10" Pipe			
L1 & L2 Dist. (ft)	Temp. (°F)	R1 Radius (in)	R2 Radius (in)
0.5	1697	4.5	5.8
1	1497	3.6	4.9
1.5	1321	2.8	4.1
2	1167	2.1	3.5
2.5	1032	1.5	2.8
3	914	1	2.3
3.5	810	0.5	1.8
4	719	0.1	1.4
4.5	639	Contact	1.1
5	569		0.8
5.5	508		0.5
6	454		0.2
6.5	406		0
7	365		Contact

Side 1 Photo

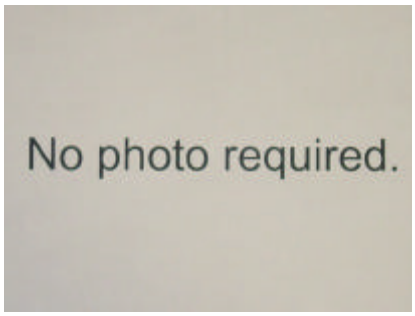

Side 2 Photo

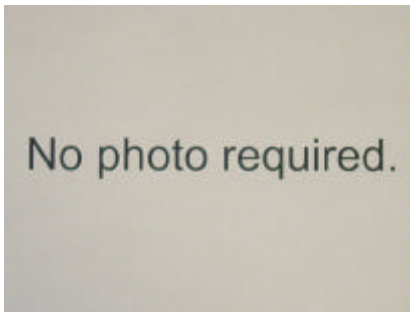

Sketch

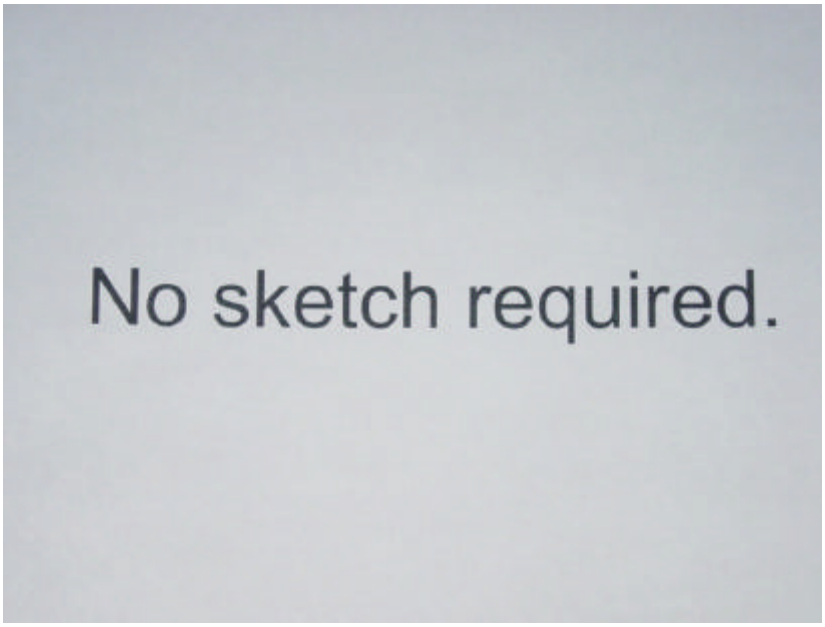

Penetration Seal Data

Appendix: B8

Penetration #: P134S0864

Penetration Type: RB-5A **Fire Area (Side 1):** A-24 **Fire Area (Side 2):** A-1

Loc./Elev.: 2000'-0" **M-0X Dwg:** M-1X1341

1. **Barrier Thickness:** 12"
2. **Opening Size:** 10" D
3. **Penetrants:** (1) 4"P
4. **Sealant Type:** HDSE/HDLE, Ceramic Fiber
5. **Damming Side1:** Boot
6. **Damming Side 2:** Boot
7. **Damming Continuity (Acc/Rej):** N/A
8. **Boot Condition (Acc/Rej):** Accept
9. **Sealant Depth:** 14-1/2" **
10. **Annular Gap (smallest):** 2"
11. **Gap between pen:** N/A
12. **Barrier Type:** F R
13. **Opening Sleeved or Concrete:** Steel
14. **Pipe Insulated:** No*

Wayne Aregood
Prepared By:

Jeff Suter
Reviewed By:

Walkdown Comments:

Slab thickness based on drawing C-1C1311. * Pipe not insulated locally at seal penetration. ** Sealant depth determined by inspection report.

Sketch:

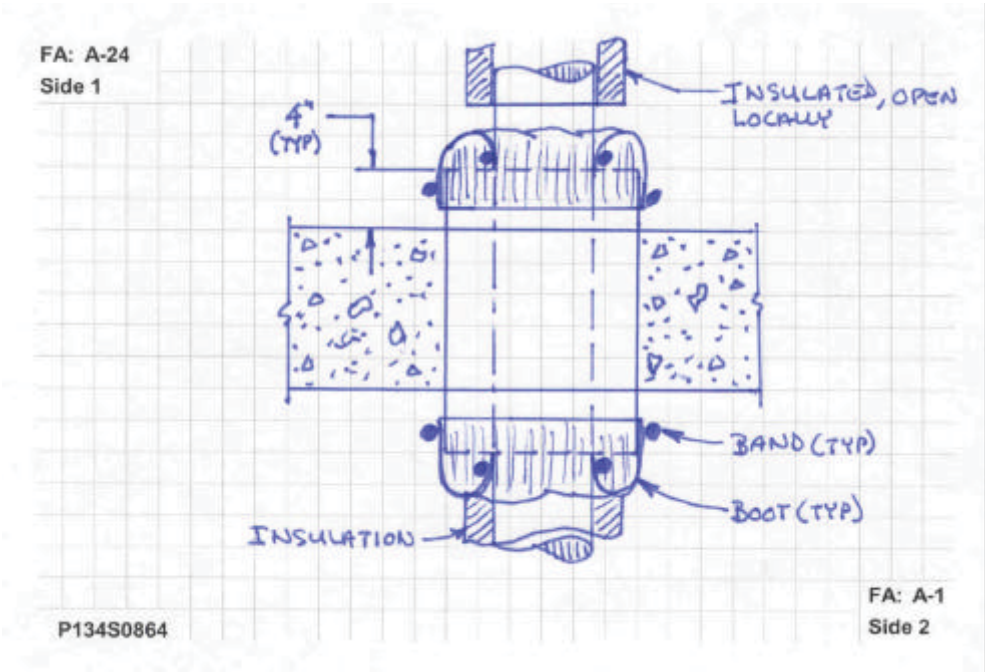

Penetration Seal Data

Appendix: B8

Photos: P134S0864

Fire Area A-24 (Side 1)

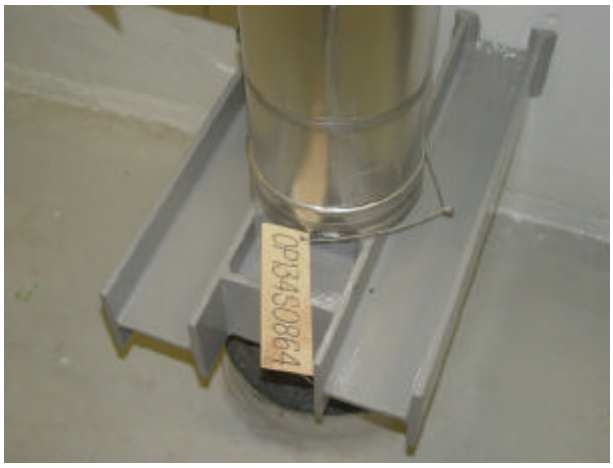

Fire Area A-24 (Side 1)

Fire Area A-1 (Side 2)

Fire Area A-1 (Side 2)

Penetration Seal Data

Appendix: B8

Heat Affected Zone Review: P134S0864

Fire Area (Side 1) A-24

No issues within Heat Affected Zone

Fire Area (Side 2) A-1

No issues within Heat Affected Zone

Review Distances

(Reference M-663-00017A, Figure 7.2.3-1)

4" Pipe			
L1 & L2 Dist. (ft)	Temp. (°F)	R1 Radius (in)	R2 Radius (in)
0.5	1625	4.2	5.5
1	1374	3	4.4
1.5	1163	2.1	3.4
2	987	1.3	2.6
2.5	839	0.6	2
3	715	0.1	1.4
3.5	610	Contact	0.9
4	523		0.6
4.5	450		0.2
5	389		Contact

Side 1 Photo

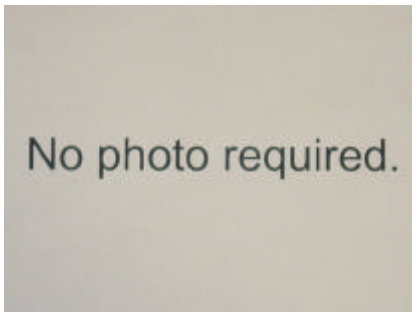

Side 2 Photo

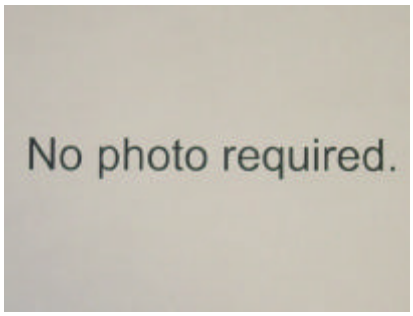

Sketch

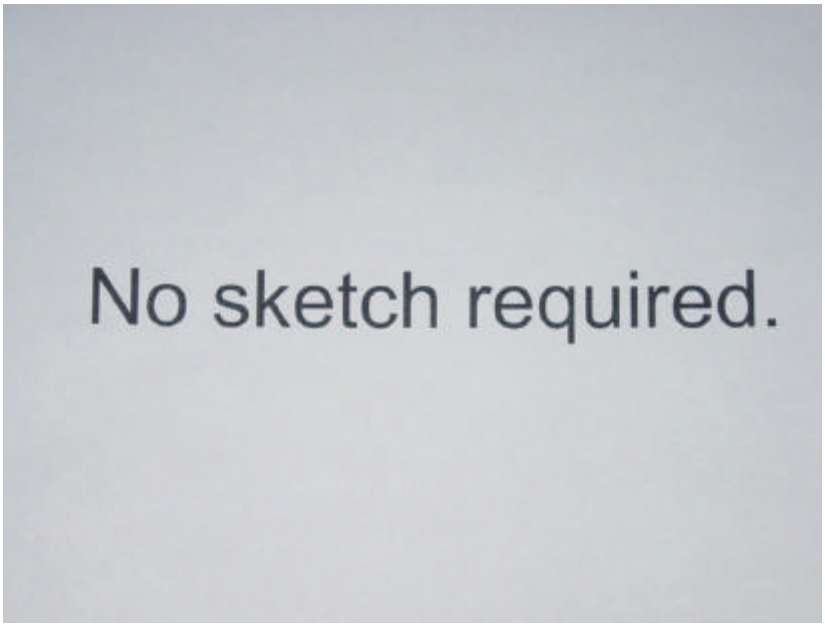

Penetration Seal Data

Appendix: B8

Penetration #: P134S0865

Penetration Type: RB-5A **Fire Area (Side 1):** A-24 **Fire Area (Side 2):** A-1

Loc./Elev.: 2000'-0" **M-0X Dwg:** M-1X1341

1. **Barrier Thickness:** 12"
2. **Opening Size:** 10" D
3. **Penetrants:** (1) 4"P
4. **Sealant Type:** HDSE/HDLE, Ceramic Fiber
5. **Damming Side1:** Boot
6. **Damming Side 2:** Boot
7. **Damming Continuity (Acc/Rej):** N/A
8. **Boot Condition (Acc/Rej):** Accept
9. **Sealant Depth:** 14" **
10. **Annular Gap (smallest):** 2"
11. **Gap between pen:** N/A
12. **Barrier Type:** F R
13. **Opening Sleeved or Concrete:** Steel
14. **Pipe Insulated:** Yes

Wayne Aregood
Prepared By:

Jeff Suter
Reviewed By:

Walkdown Comments:

Slab thickness based on drawing C-1C1311. ** Sealant depth determined by inspection report.

Sketch:

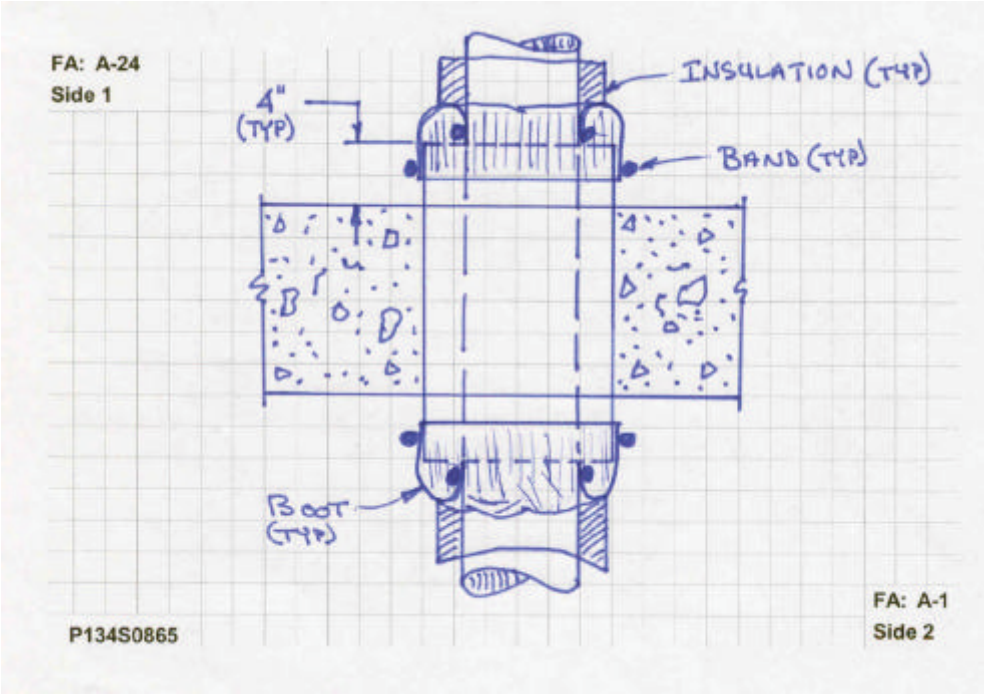

Penetration Seal Data

Appendix: B8

Photos: P134S0865

Fire Area A-24 (Side 1)

Fire Area A-24 (Side 1)

Fire Area A-1 (Side 2)

Fire Area A-1 (Side 2)

Penetration Seal Data

Appendix: B8

Heat Affected Zone Review: P134S0865

Fire Area (Side 1) A-24

No issues within Heat Affected Zone

Fire Area (Side 2) A-1

No issues within Heat Affected Zone

Review Distances

(Reference M-663-00017A, Figure 7.2.3-1)

4" Pipe			
L1 & L2 Dist. (ft)	Temp. (°F)	R1 Radius (in)	R2 Radius (in)
0.5	1625	4.2	5.5
1	1374	3	4.4
1.5	1163	2.1	3.4
2	987	1.3	2.6
2.5	839	0.6	2
3	715	0.1	1.4
3.5	610	Contact	0.9
4	523		0.6
4.5	450		0.2
5	389		Contact

Side 1 Photo

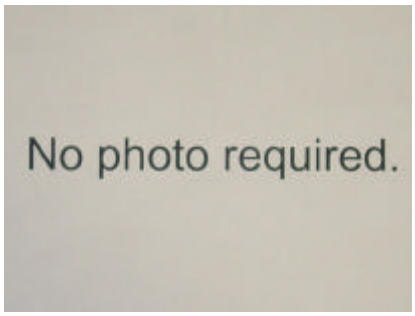

Side 2 Photo

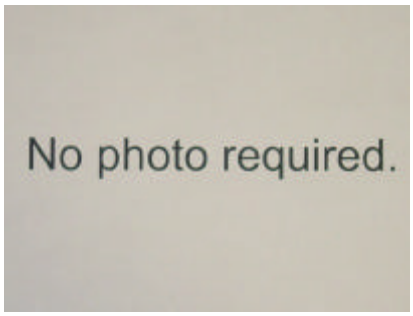

Sketch

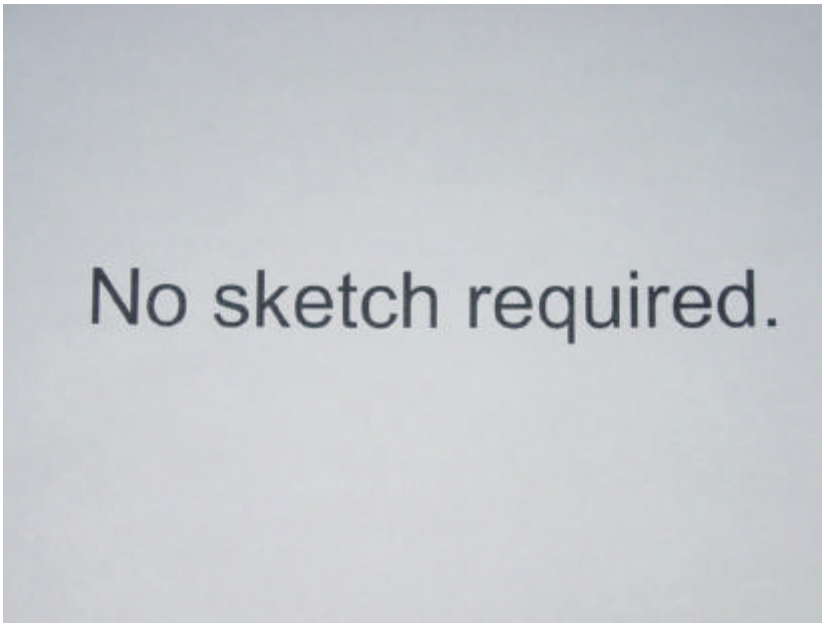

Penetration Seal Data

Appendix: B8

Penetration #: P134S0875

Penetration Type: RB-5A **Fire Area (Side 1):** A-24 **Fire Area (Side 2):** A-1

Loc./Elev.: 2000'-0" **M-0X Dwg:** M-1X1341

1. **Barrier Thickness:** 12"
2. **Opening Size:** 18"D
3. **Penetrants:** (1) 10"P
4. **Sealant Type:** HDSE/HDLE, Ceramic Fiber
5. **Damming Side1:** Boot
6. **Damming Side 2:** Boot
7. **Damming Continuity (Acc/Rej):** N/A
8. **Boot Condition (Acc/Rej):** Accept
9. **Sealant Depth:** Assumed Per Detail
10. **Annular Gap (smallest):** 2"
11. **Gap between pen:** N/A
12. **Barrier Type:** F R
13. **Opening Sleeved or Concrete:** Steel
14. **Pipe Insulated:** Yes

Wayne Aregood
Prepared By:

Jeff Suter
Reviewed By:

Walkdown Comments:

Slab thickness based on drawing C-1C1311.

Sketch:

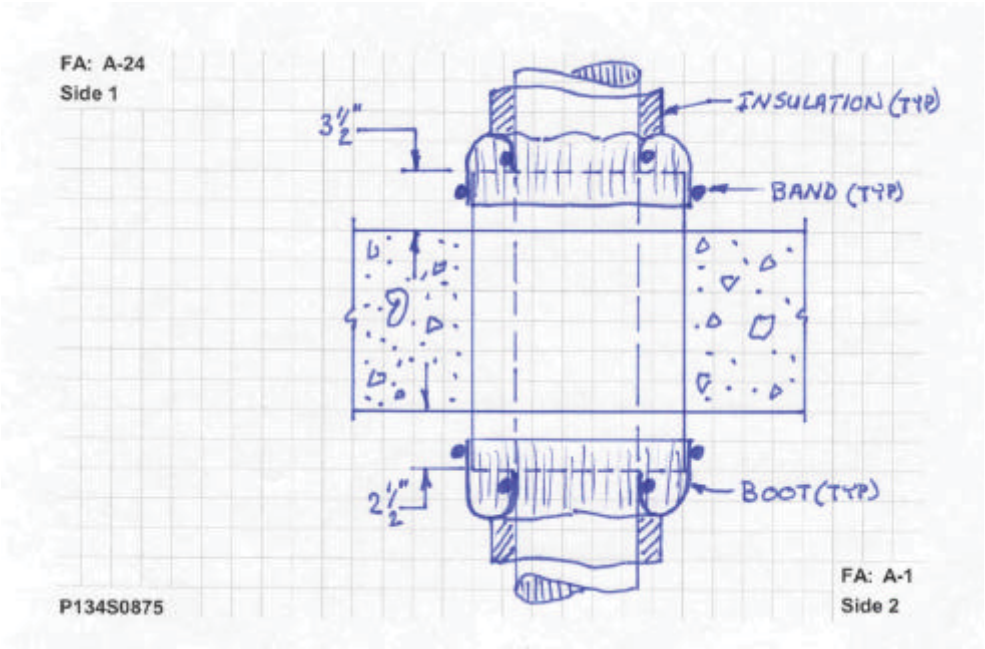

Penetration Seal Data

Appendix: B8

Photos: P134S0875

Fire Area A-24 (Side 1)

Fire Area A-24 (Side 1)

Fire Area A-1 (Side 2)

Fire Area A-1 (Side 2)

Penetration Seal Data

Appendix: B8

Heat Affected Zone Review: P134S0875

Fire Area (Side 1) A-24

No issues within Heat Affected Zone

Fire Area (Side 2) A-1

No issues within Heat Affected Zone

Review Distances

(Reference M-663-00017A, Figure 7.2.3-1)

10" Pipe			
L1 & L2 Dist. (ft)	Temp. (°F)	R1 Radius (in)	R2 Radius (in)
0.5	1697	4.5	5.8
1	1497	3.6	4.9
1.5	1321	2.8	4.1
2	1167	2.1	3.5
2.5	1032	1.5	2.8
3	914	1	2.3
3.5	810	0.5	1.8
4	719	0.1	1.4
4.5	639	Contact	1.1
5	569		0.8
5.5	508		0.5
6	454		0.2
6.5	406		0
7	365		Contact

Side 1 Photo

No photo required.

Side 2 Photo

No photo required.

Sketch

No sketch required.

Penetration Seal Data

Appendix: B8

Penetration #: P134S0911

Penetration Type: RB-5A **Fire Area (Side 1):** A-24 **Fire Area (Side 2):** A-1

Loc./Elev.: 2000'-0" **M-0X Dwg:** M-1X1341

1. **Barrier Thickness:** 12"
2. **Opening Size:** 12"D
3. **Penetrants:** (1) 4"P
4. **Sealant Type:** HDSE/HDLE, Ceramic Fiber
5. **Damming Side1:** Boot
6. **Damming Side 2:** Boot
7. **Damming Continuity (Acc/Rej):** N/A
8. **Boot Condition (Acc/Rej):** Accept
9. **Sealant Depth:** 13-1/2" **
10. **Annular Gap (smallest):** 3"
11. **Gap between pen:** N/A
12. **Barrier Type:** F R
13. **Opening Sleeved or Concrete:** Steel
14. **Pipe Insulated:** No

Wayne Aregood
Prepared By:

Jeff Suter
Reviewed By:

Walkdown Comments:

Slab thickness based on drawing C-1C1311. ** Sealant depth determined by inspection report.

Sketch:

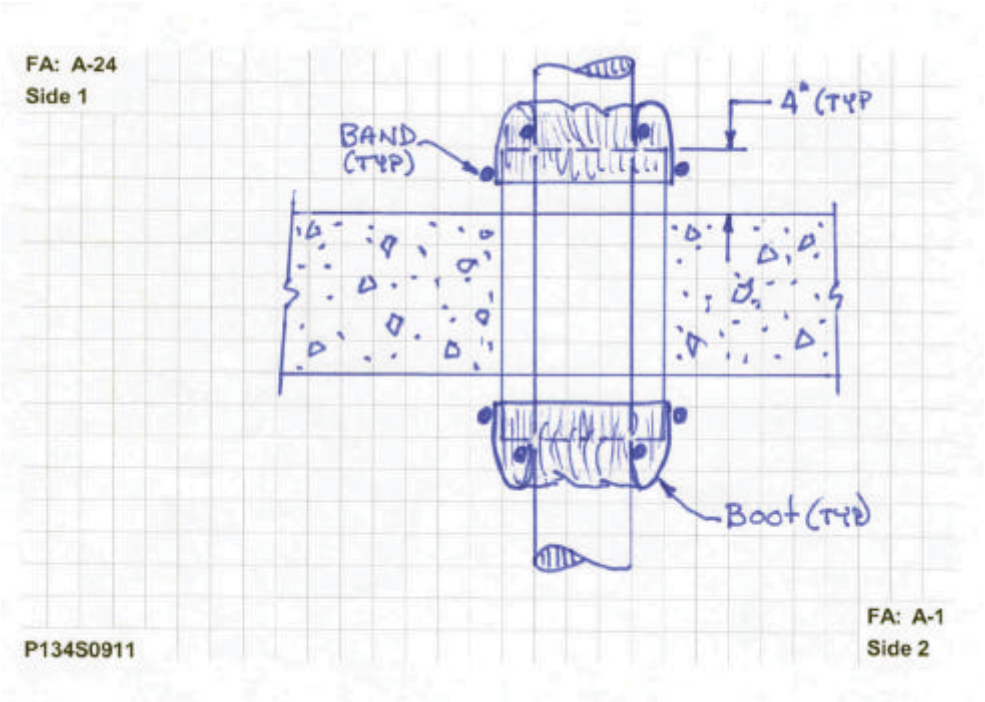

Penetration Seal Data

Appendix: B8

Photos: P134S0911

Fire Area A-24 (Side 1)

Fire Area A-24 (Side 1)

Fire Area A-1 (Side 2)

Fire Area A-1 (Side 2)

Penetration Seal Data

Appendix: B8

Heat Affected Zone Review: P134S0911

Fire Area (Side 1) A-24

No issues within Heat Affected Zone

Fire Area (Side 2) A-1

No issues within Heat Affected Zone

Review Distances

(Reference M-663-00017A, Figure 7.2.3-1)

4" Pipe			
L1 & L2 Dist. (ft)	Temp. (°F)	R1 Radius (in)	R2 Radius (in)
0.5	1625	4.2	5.5
1	1374	3	4.4
1.5	1163	2.1	3.4
2	987	1.3	2.6
2.5	839	0.6	2
3	715	0.1	1.4
3.5	610	Contact	0.9
4	523		0.6
4.5	450		0.2
5	389		Contact

Side 1 Photo

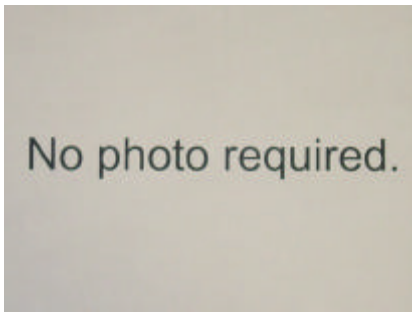

Side 2 Photo

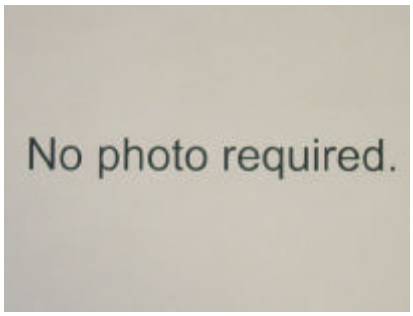

Sketch

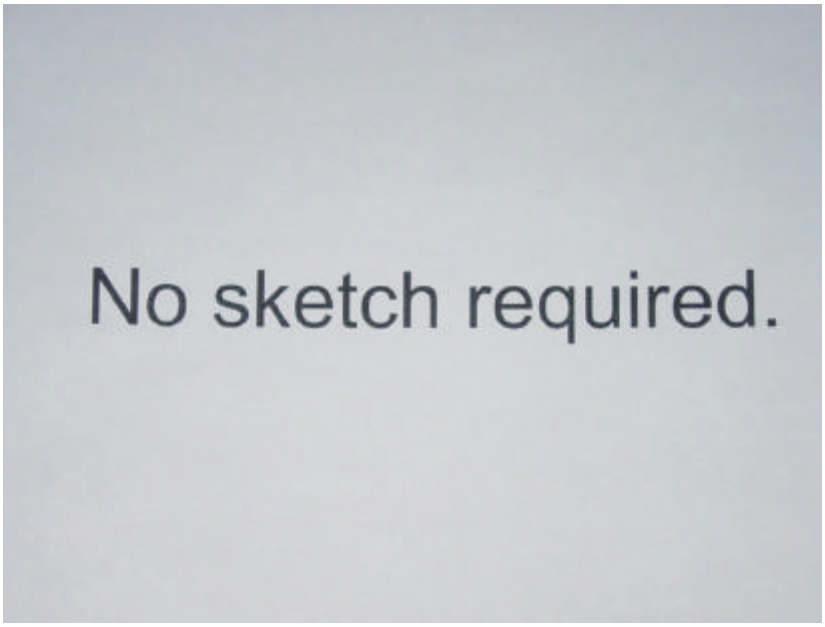

Penetration Seal Data

Appendix: B8

Penetration #: P134S0912

Penetration Type: RB-5A **Fire Area (Side 1):** A-24 **Fire Area (Side 2):** A-1

Loc./Elev.: 2000'-0" **M-0X Dwg:** M-1X1341

1. **Barrier Thickness:** 12"
2. **Opening Size:** 14"D
3. **Penetrants:** (1) 4"P
4. **Sealant Type:** HDSE/HDLE, Ceramic Fiber
5. **Damming Side1:** Boot
6. **Damming Side 2:** Boot
7. **Damming Continuity (Acc/Rej):** N/A
8. **Boot Condition (Acc/Rej):** Accept
9. **Sealant Depth:** 13-1/2" **
10. **Annular Gap (smallest):** 3"
11. **Gap between pen:** N/A
12. **Barrier Type:** F R
13. **Opening Sleeved or Concrete:** Steel
14. **Pipe Insulated:** No

Wayne Aregood
Prepared By:

Jeff Suter
Reviewed By:

Walkdown Comments:

Slab thickness based on drawing C-1C1311. ** Sealant depth determined by inspection report.

Sketch:

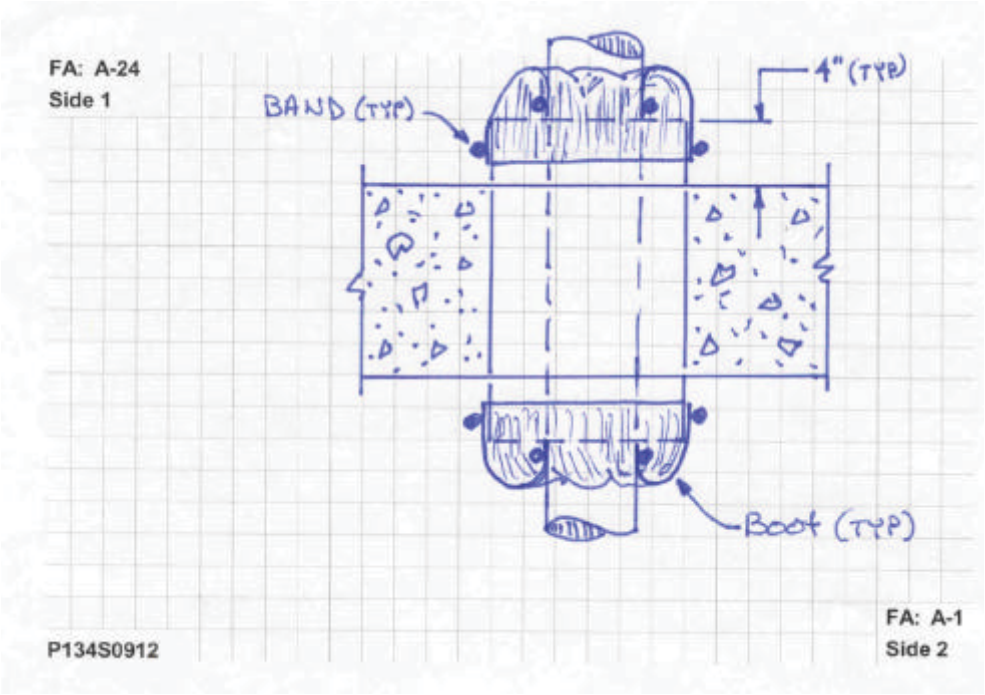

Penetration Seal Data

Appendix: B8

Photos: P134S0912

Fire Area A-24 (Side 1)

Fire Area A-24 (Side 1)

Fire Area A-1 (Side 2)

Fire Area A-1 (Side 2)

Penetration Seal Data

Appendix: B8

Heat Affected Zone Review: P134S0912

Fire Area (Side 1) A-24

No issues within Heat Affected Zone

Fire Area (Side 2) A-1

No issues within Heat Affected Zone

Review Distances

(Reference M-663-00017A, Figure 7.2.3-1)

4" Pipe			
L1 & L2 Dist. (ft)	Temp. (°F)	R1 Radius (in)	R2 Radius (in)
0.5	1625	4.2	5.5
1	1374	3	4.4
1.5	1163	2.1	3.4
2	987	1.3	2.6
2.5	839	0.6	2
3	715	0.1	1.4
3.5	610	Contact	0.9
4	523		0.6
4.5	450		0.2
5	389		Contact

Side 1 Photo

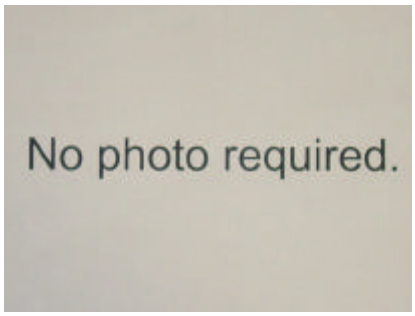

Side 2 Photo

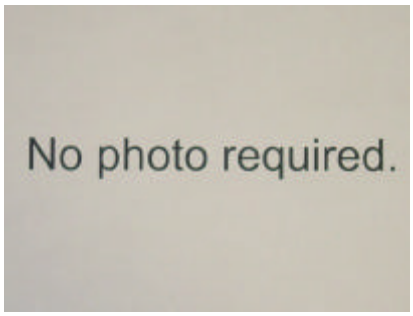

Sketch

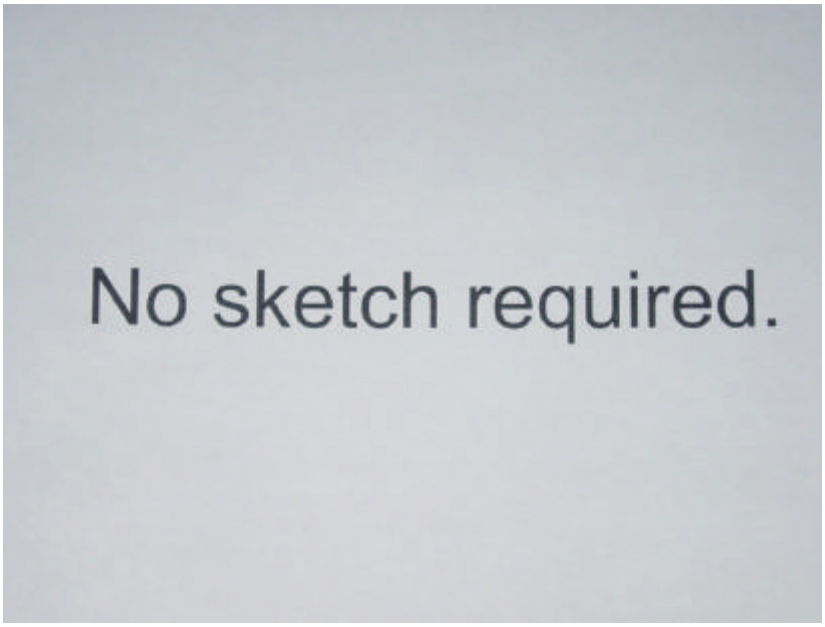

Penetration Seal Data

Appendix: B8

Penetration #: P134S0918

Penetration Type: RB-5A **Fire Area (Side 1):** A-24 **Fire Area (Side 2):** A-1

Loc./Elev.: 2000'-0" **M-0X Dwg:** M-1X1341

1. **Barrier Thickness:** 12"
2. **Opening Size:** 10"D
3. **Penetrants:** (1) 4"P
4. **Sealant Type:** HDSE/HDLE, Ceramic Fiber
5. **Damming Side1:** Boot
6. **Damming Side 2:** Boot
7. **Damming Continuity (Acc/Rej):** N/A
8. **Boot Condition (Acc/Rej):** Accept
9. **Sealant Depth:** 15" **
10. **Annular Gap (smallest):** 1-1/2"
11. **Gap between pen:** N/A
12. **Barrier Type:** F R
13. **Opening Sleeved or Concrete:** Steel
14. **Pipe Insulated:** Yes

Wayne Aregood
Prepared By:

Jeff Suter
Reviewed By:

Walkdown Comments:

Slab thickness based on drawing C-1C1311. ** Sealant depth determined by inspection report.

Sketch:

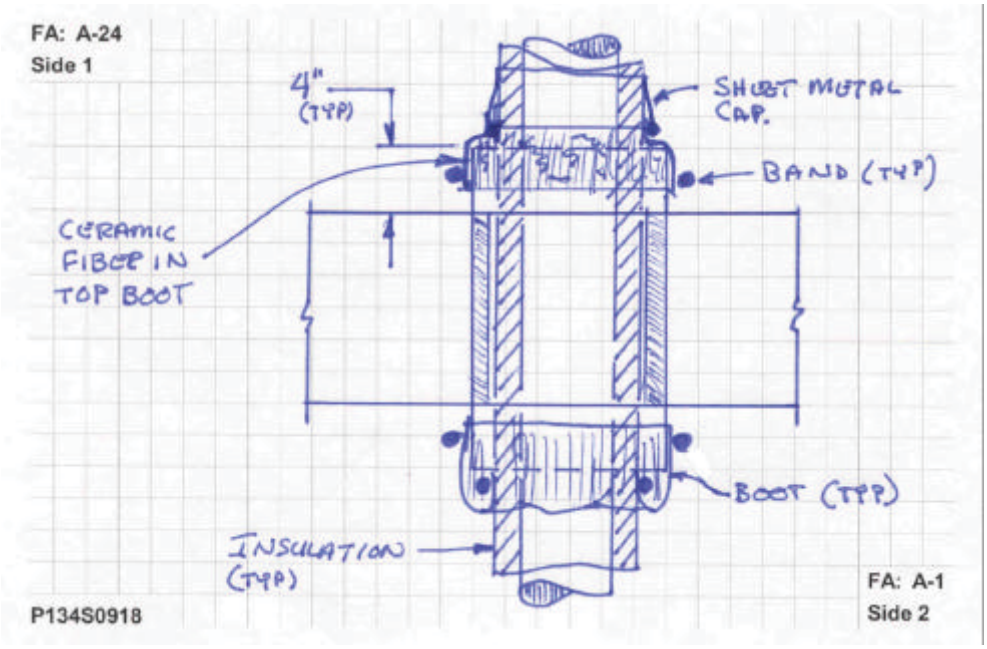

Penetration Seal Data

Appendix: B8

Photos: P134S0918

Fire Area A-24 (Side 1)

Fire Area A-24 (Side 1)

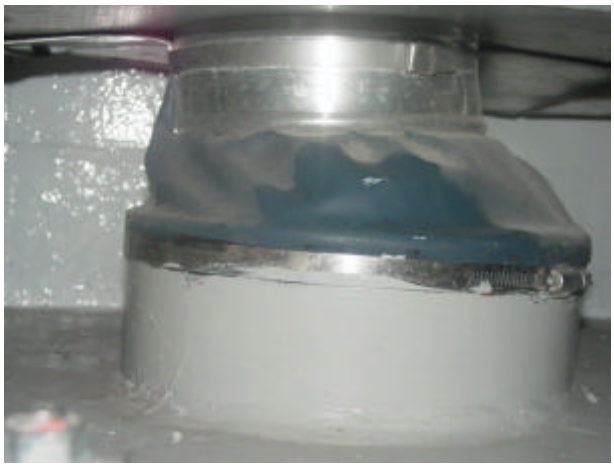

Fire Area A-1 (Side 2)

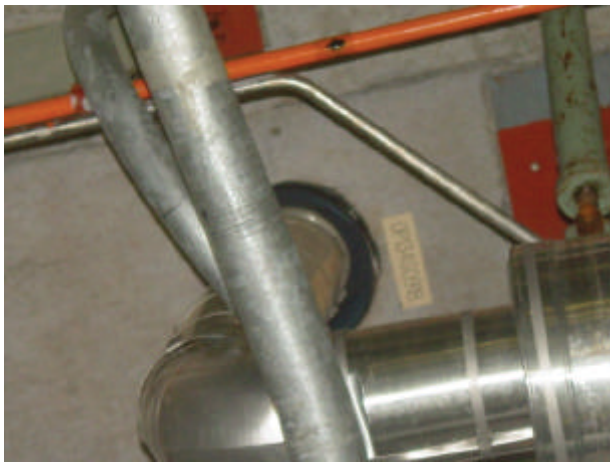

Fire Area A-1 (Side 2)

Penetration Seal Data

Appendix: B8

Heat Affected Zone Review: P134S0918

Fire Area (Side 1) A-24

No issues within Heat Affected Zone

Fire Area (Side 2) A-1

No issues within Heat Affected Zone

Review Distances

(Reference M-663-00017A, Figure 7.2.3-1)

4" Pipe			
L1 & L2 Dist. (ft)	Temp. (°F)	R1 Radius (in)	R2 Radius (in)
0.5	1625	4.2	5.5
1	1374	3	4.4
1.5	1163	2.1	3.4
2	987	1.3	2.6
2.5	839	0.6	2
3	715	0.1	1.4
3.5	610	Contact	0.9
4	523		0.6
4.5	450		0.2
5	389		Contact

Side 1 Photo

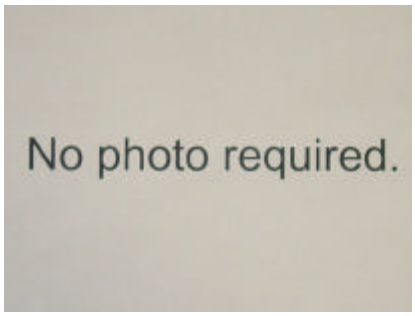

Side 2 Photo

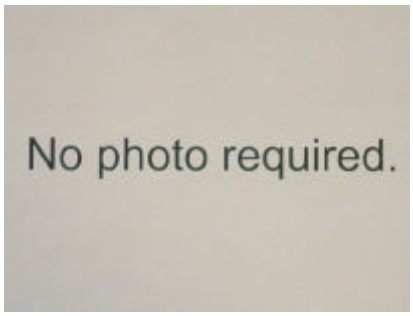

Sketch

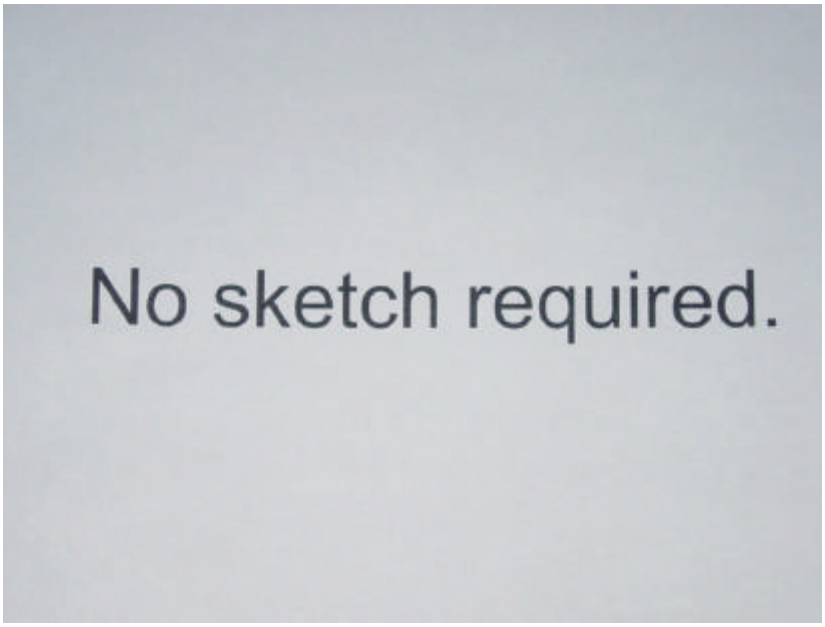

Penetration Seal Data

Appendix: B8

Penetration #: P134S0919

Penetration Type: RB-5A **Fire Area (Side 1):** A-24 **Fire Area (Side 2):** A-1

Loc./Elev.: 2000'-0" **M-0X Dwg:** M-1X1341

1. **Barrier Thickness:** 12"
2. **Opening Size:** 10"D
3. **Penetrants:** (1) 4"P
4. **Sealant Type:** HDSE/HDLE, Ceramic Fiber
5. **Damming Side1:** Boot
6. **Damming Side 2:** Boot
7. **Damming Continuity (Acc/Rej):** N/A
8. **Boot Condition (Acc/Rej):** Accept
9. **Sealant Depth:** 14" **
10. **Annular Gap (smallest):** 5"
11. **Gap between pen:** N/A
12. **Barrier Type:** F R
13. **Opening Sleeved or Concrete:** Steel
14. **Pipe Insulated:** Yes

Wayne Aregood
Prepared By:

Jeff Suter
Reviewed By:

Walkdown Comments:

Slab thickness based on drawing C-1C1311. ** Sealant depth determined by inspection report.

Sketch:

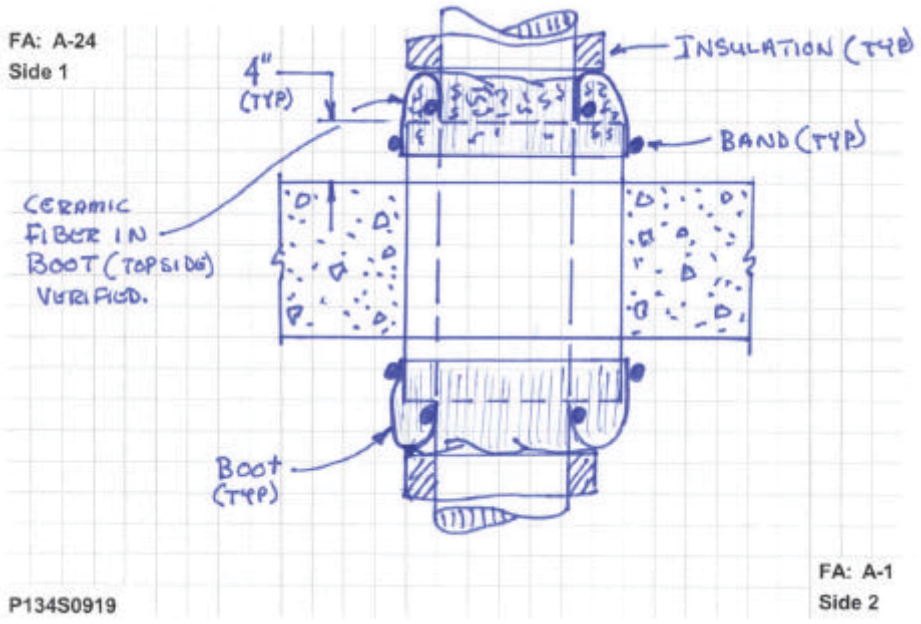

Penetration Seal Data

Appendix: B8

Photos: P134S0919

Fire Area A-24 (Side 1)

Fire Area A-24 (Side 1)

Fire Area A-1 (Side 2)

Fire Area A-1 (Side 2)

Penetration Seal Data

Appendix: B8

Heat Affected Zone Review: P134S0919

Fire Area (Side 1) A-24

No issues within Heat Affected Zone

Fire Area (Side 2) A-1

No issues within Heat Affected Zone

Review Distances

(Reference M-663-00017A, Figure 7.2.3-1)

4" Pipe			
L1 & L2 Dist. (ft)	Temp. (°F)	R1 Radius (in)	R2 Radius (in)
0.5	1625	4.2	5.5
1	1374	3	4.4
1.5	1163	2.1	3.4
2	987	1.3	2.6
2.5	839	0.6	2
3	715	0.1	1.4
3.5	610	Contact	0.9
4	523		0.6
4.5	450		0.2
5	389		Contact

Side 1 Photo

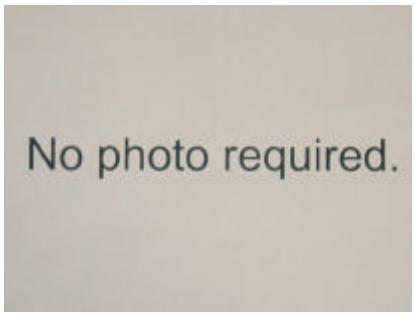

Side 2 Photo

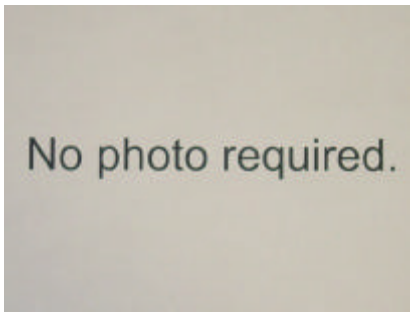

Sketch

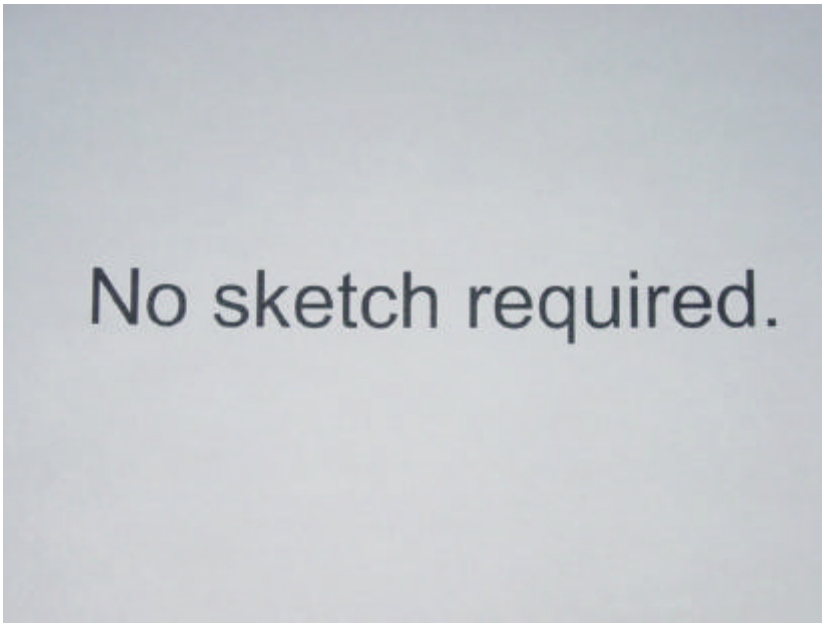

Penetration Seal Data

Appendix: B8

Penetration #: P141W1854

Penetration Type: RB-5A **Fire Area (Side 1):** A-8 **Fire Area (Side 2):** A-9

Loc./Elev.: 2034'-11 **M-0X Dwg:** M-1X1918

1. **Barrier Thickness:** 36"
2. **Opening Size:** 26"D
3. **Penetrants:** (1) 18"P
4. **Sealant Type:** HDSE/HDLE, Ceramic Fiber
5. **Damming Side1:** Boot
6. **Damming Side 2:** Boot
7. **Damming Continuity (Acc/Rej):** N/A
8. **Boot Condition (Acc/Rej):** Accept
9. **Sealant Depth:** 41" **
10. **Annular Gap (smallest):** 2"
11. **Gap between pen:** N/A
12. **Barrier Type:** F R
13. **Opening Sleeved or Concrete:** Steel
14. **Pipe Insulated:** No

Wayne Aregood
Prepared By:

Jeff Suter
Reviewed By:

Walkdown Comments:

Barrier thickness based on C-1C1311. ** Sealant depth determined from inspection report.

Sketch:

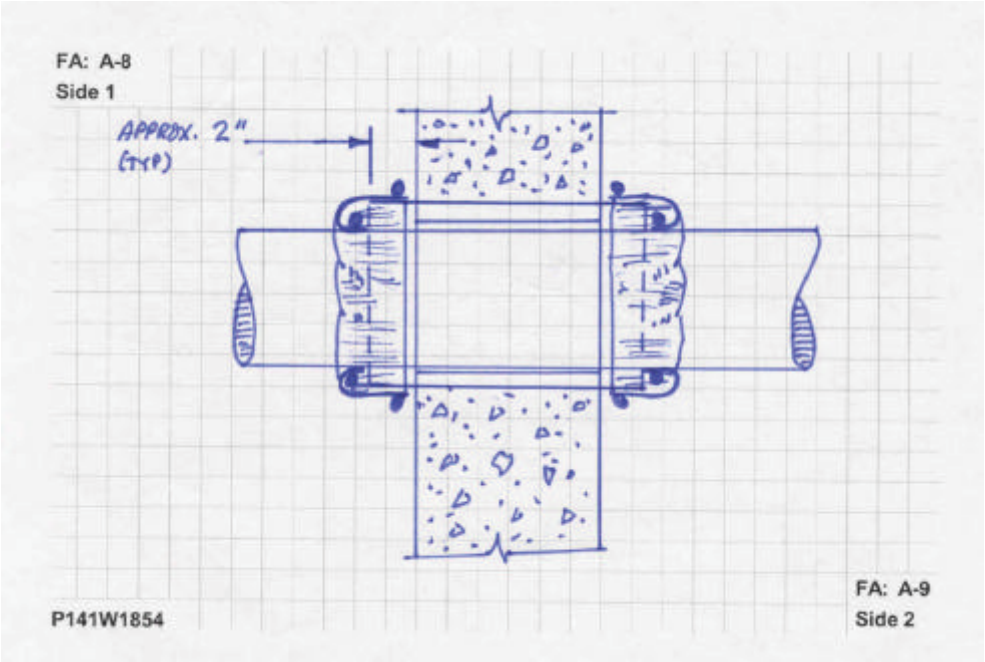

Penetration Seal Data

Appendix: B8

Photos: P141W1854

Fire Area A-8 (Side 1)

Fire Area A-8 (Side 1)

Fire Area A-9 (Side 2)

Fire Area A-9 (Side 2)

Penetration Seal Data

Appendix: B8

Heat Affected Zone Review: P141W1854

Fire Area (Side 1) A-8

No issues within Heat Affected Zone

Fire Area (Side 2) A-9

No issues within Heat Affected Zone

Review Distances

(Reference M-663-00017A, Figure 7.2.3-1)

18" Pipe			
L1 & L2 Dist. (ft)	Temp. (°F)	R1 Radius (in)	R2 Radius (in)
0.5	1741	4.7	6
1	1576	3.9	5.3
1.5	1426	3.3	4.6
2	1292	2.7	4
2.5	1171	2.1	3.5
3	1062	1.6	3
3.5	964	1.2	2.5
4	875	0.8	2.1
4.5	795	0.4	1.8
5	724	0.1	1.5
5.5	659	Contact	1.2
6	600		0.9
6.5	548		0.7
7	501		0.5
7.5	458		0.3
8	419		0.1
8.5	385		Contact

Side 1 Photo

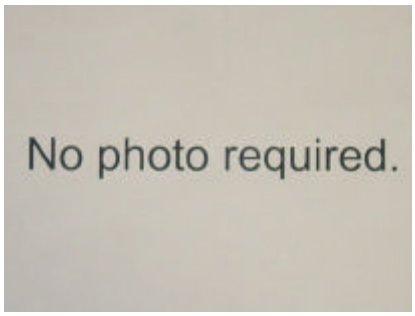

Side 2 Photo

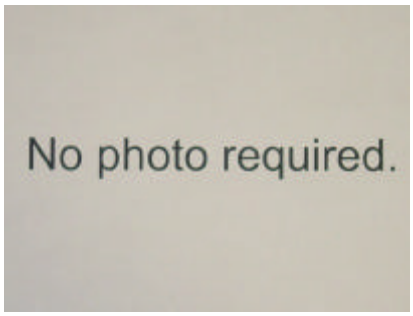

Sketch

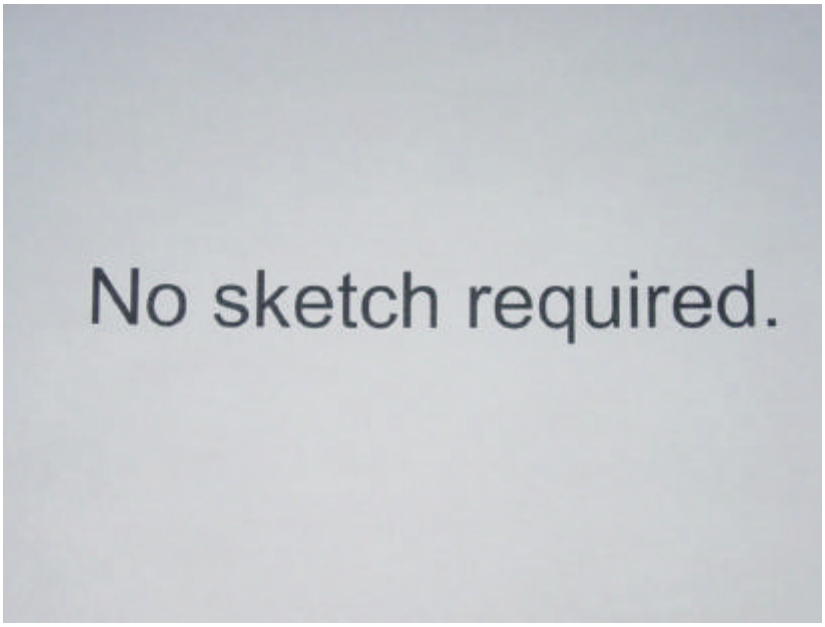

Penetration Seal Data

Appendix: B8

Penetration #: P141W1980

Penetration Type: RB-5A **Fire Area (Side 1):** A-16 **Fire Area (Side 2):** A-9

Loc./Elev.: 2028'-6" **M-0X Dwg:** M-0X1920

1. **Barrier Thickness:** 36"
2. **Opening Size:** 26"D
3. **Penetrants:** (1) 18"P
4. **Sealant Type:** HDSE/HDLE, Ceramic Fiber
5. **Damming Side1:** Boot
6. **Damming Side 2:** Boot
7. **Damming Continuity (Acc/Rej):** N/A
8. **Boot Condition (Acc/Rej):** Accept
9. **Sealant Depth:** Assumed per detail
10. **Annular Gap (smallest):** 2"
11. **Gap between pen:** N/A
12. **Barrier Type:** F R
13. **Opening Sleeved or Concrete:** Steel
14. **Pipe Insulated:** No

Jeff Suter
Prepared By:

Wayne Aregood
Reviewed By:

Walkdown Comments:

Barrier thickness based on C-0C1411.

Sketch:

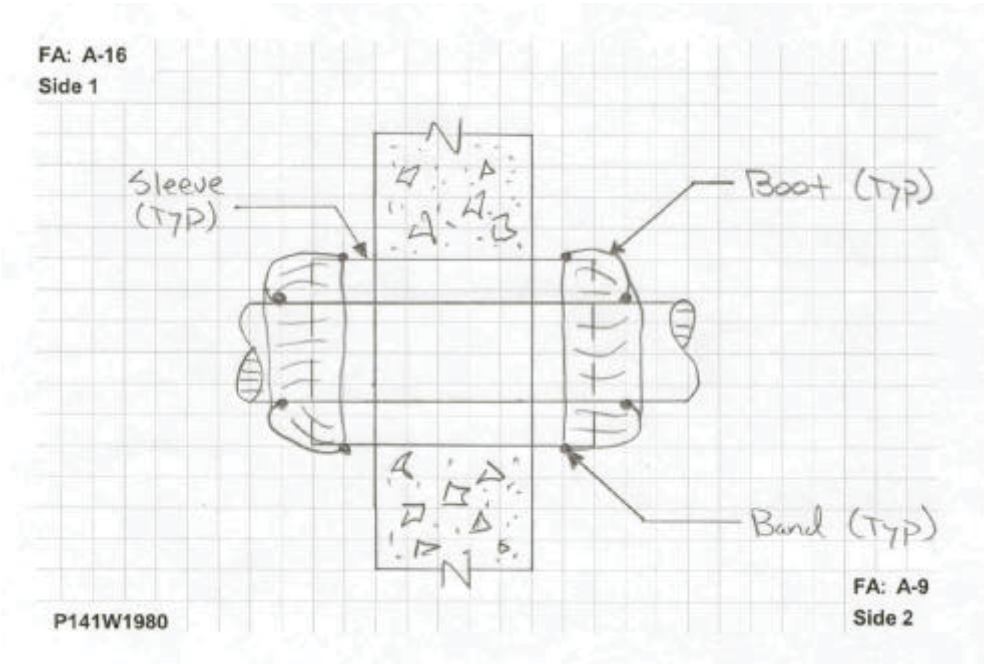

Penetration Seal Data

Appendix: B8

Photos: P141W1980

Fire Area A-16 (Side 1)

Fire Area A-16 (Side 1)

Fire Area A-9 (Side 2)

Fire Area A-9 (Side 2)

Penetration Seal Data

Appendix: B8

Heat Affected Zone Review: P141W1980

Fire Area (Side 1) A-16

No issues within Heat Affected Zone

Fire Area (Side 2) A-9

No issues within Heat Affected Zone

Review Distances

(Reference M-663-00017A, Figure 7.2.3-1)

18" Pipe			
L1 & L2 Dist. (ft)	Temp. (°F)	R1 Radius (in)	R2 Radius (in)
0.5	1741	4.7	6
1	1576	3.9	5.3
1.5	1426	3.3	4.6
2	1292	2.7	4
2.5	1171	2.1	3.5
3	1062	1.6	3
3.5	964	1.2	2.5
4	875	0.8	2.1
4.5	795	0.4	1.8
5	724	0.1	1.5
5.5	659	Contact	1.2
6	600		0.9
6.5	548		0.7
7	501		0.5
7.5	458		0.3
8	419		0.1
8.5	385		Contact

Side 1 Photo

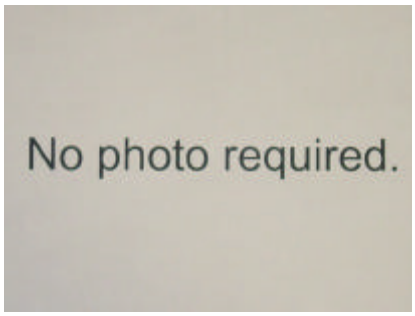

Side 2 Photo

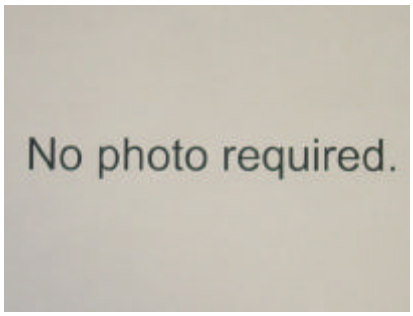

Sketch

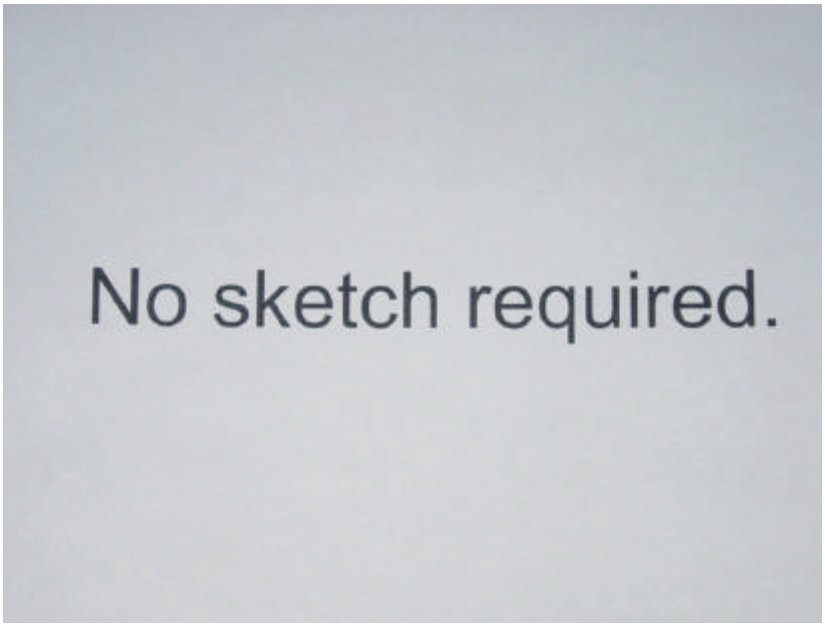

WOLF CREEK
NUCLEAR OPERATING CORPORATION

M-663-00017A

Attachment B9

Fire Protection Evaluation For Penetrant Size Exceeding Typical Detail RB-1 or RB-8 Limitation

Rev. No.	Prepared By	Date	Reviewed By	Date
W01	Jeff Suter	08/22/05	Wayne S Aregood	08/22/05

Table of Contents

Revision Log 3

1.0 Purpose..... 4

2.0 Scope 4

3.0 References..... 4

4.0 Evaluation 5

5.0 Conclusions..... 7

Appendix B9, Penetration Seal Data ……..……. (15 Total Pages)

Revision Log

Revision	Reason for Revision
W01	Original Issue

1.0 Purpose

1.1 The purpose of this document is to evaluate existing penetration seals that are not directly bounded to the typical detail limitations established in M-663-00017. This evaluation was conducted in effort to satisfy regulatory expectation regarding qualification and documentation of fire barrier penetration seals, as discussed in NRC Information Notice 88-04. This evaluation was conducted in accordance with the guidance of NRC Generic Letter 86-10.

2.0 Scope

2.1 The Table I penetrations in relation to the design requirements discussed in Section 5.1.

2.2 Refer to Section 7.0 of M-663-00017A for a cross-reference list of penetrations within Table I that are evaluated for additional seal parameters that do not satisfy the typical detail limitations of M-663-00017. In these instances, the potential cumulative affects of multiple unbounded attributes were considered for each penetration of concern.

3.0 References

3.1 NRC Generic Letter 86-10, Implementation of Fire Protection Requirements, dated April 24, 1986

3.2 NRC Information Notice 88-04, Inadequate Qualification and Documentation of Fire Barrier Penetration Seals

3.3 10 CFR 50 Appendix R, Fire Protection Program For Nuclear Power Facilities Operating Prior To January 1, 1979

3.4 LER 87-10, Technical Specification Violations – Inoperable Fire Barriers Caused By Personnel Errors

3.5 M-663-00017, Penetration Seal Typical Details, Rev. W20

4.0 Assumptions

4.1 It is assumed that existing penetration seal materials have been installed as required by applicable typical design details and procedures. This is an acceptable assumption based on a review of the Quality Control documentation maintained during initial penetration seal installation activities and the intrusive inspections conducted to address LER 87-10, regarding seal material depth.

5.0 Evaluation

5.1 Assessment of Condition to Design Requirements

The penetration openings identified in Table I contain a pipe penetrant that exceeds the size limitation directly bounded by typical detail RB-1 or RB-8 from M-663-00017. RB-1 is sealed with Radflex between silicone impregnated fiberglass boots. RB-8 is also a Radflex seal, were interference does not allow the installation of boot on one or both barrier sides. In this case a minimum 1-1/2" depth of Silicone Foam is utilized as a "plug" on the barrier side containing the interference. For both seal details, the maximum penetrant size is 10" in diameter. The topside boot for RB-1 may be omitted in floor/ceiling orientations. Figures 1 and 2 depict typical RB-1 and RB-8 details, respectively.

TABLE I

Penetrations with Penetrant Size Exceeding Detail RB-1 or RB-8 Limitations

Penetration Number	Communicating Fire Areas		Typical Detail	Pipe Penetrant Diameter	Barrier Thickness	Radflex Seal Depth	Comments / Disposition
	Side 1	Side 2					
P121S0277	A-1	A-4	RB-1	14"	19" *	> 19"	See 5.2
P121S0278	A-1	A-4	RB-1	14"	19" *	> 19"	See 5.2
P122S0347	A-1	A-2	RB-1	12"	22" *	> 22"	See 5.2
P134W2053	A-8	A-24	RB-8	12"	36"	> 36"	See 5.2
P142W1933	A-16	A-10	RB-8	18"	36"	> 36"	See 5.2
* Barrier thickness is based on top of slab to recessed portion of corrugated metal deck.							

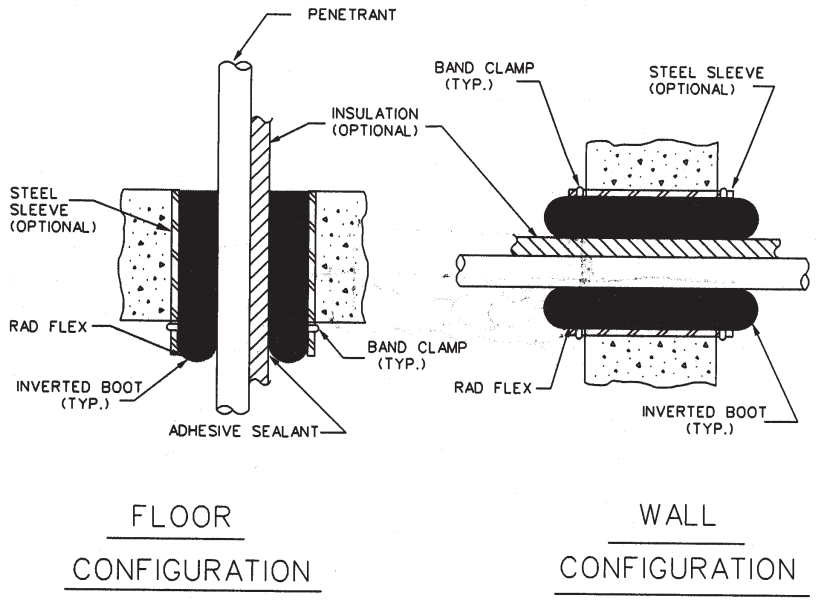

Figure 1, Typical Detail RB-1
(Reference M-663-00017)

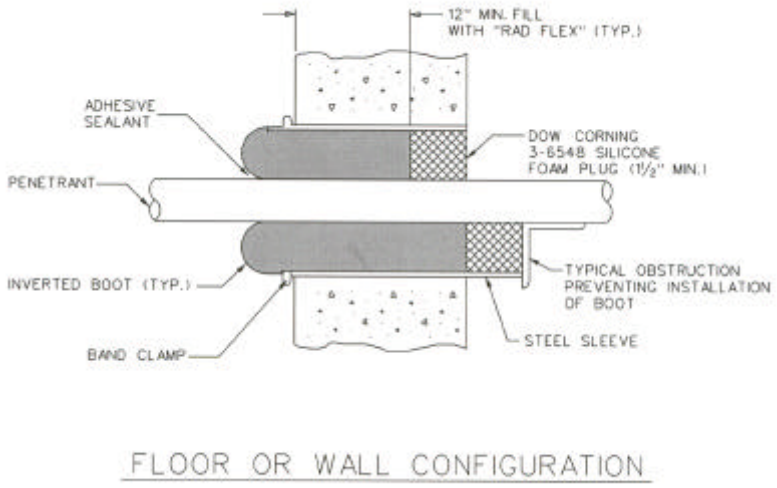

Figure 2, Typical Detail RB-8
(Reference M-663-00017)

5.2 Evaluation of Condition

Radflex has been utilized in boundaries providing fire and radiation protection where mechanical penetrant movement is likely. To satisfy radiation attenuation requirements, Radflex has typically been installed to the full depth of the barrier. The tested configurations bounding typical details RB-1 and RB-8 contained a 12" depth of Radflex within the barrier plane (Radflex was also present in boots beyond the barrier plane). The Table I penetrations are provided with seal depths within the barrier plane that are at least 19". Consistent with the tested configurations, additional Radflex material is also present in the boots beyond the barrier plane.

Radflex has a density (150 lb/ft^3) comparable to concrete, with excellent fire test performance regarding material char and thermal transmission to the unexposed side seal surface. Considering this, and the substantial seal material depth increase over the tested configurations, there is reasonable assurance that penetrant thermal insult will not impact the fire resistive performance of the Table I penetrations. Therefore, the Table I penetrations are considered 3-hour F and T rated.

Conservatively, the heat affected zone for each of the Table I penetrations was reviewed in accordance with the criteria and methodology of established in M-663-00017A Section 7.2.3 for non-T rated penetrations. The review, documented in Appendix B9, identified that no exposed insitu combustibles or PFSSD circuits are located within the heat affected zone for the Table I penetrations. This further substantiates the acceptability of the Table I penetration seal configurations.

5.3 Post Fire Safe Shutdown Impact

There is no impact to PFSSD systems or components as a result of this evaluation. The Table I penetrations are considered 3-hour F and T rated. Additionally, as a conservative measure, comprehensive walkdown reviews for each of these penetrations revealed that no exposed insitu combustibles or PFSSD circuits are present within the heat affected zone for the Table I penetrations.

6.0 Conclusions

Based on the above discussions, the Table I penetration seals are considered 3-hour F and T rated, consistent with regulatory requirements and commitments as well as WCNOC Fire Protection Program requirements.

Penetration Seal Data

Appendix: B9

Penetration #: P121S0277

Penetration Type: RB-1 **Fire Area (Side 1):** A-1 **Fire Area (Side 2):** A-4

Loc./Elev.: 1988'-0" **M-0X Dwg:** M-0X1211

1. **Barrier Thickness:** 19"
2. **Opening Size:** 30" D
3. **Penetrants:** (1) 14"P
4. **Sealant Type:** Radflex
5. **Damming Side1:** Boot
6. **Damming Side 2:** Boot
7. **Damming Continuity (Acc/Rej):** N/A
8. **Boot Condition (Acc/Rej):** Accept
9. **Sealant Depth:** Assumed Per Detail
10. **Annular Gap (smallest):** 6"
11. **Gap between pen:** N/A
12. **Barrier Type:** F R W
13. **Opening Sleeved or Concrete:** Steel
14. **Pipe Insulated:** Yes

Wayne Aregood
Prepared By:

Jeff Suter
Reviewed By:

Walkdown Comments:

Slab thickness determined from drawing C-0C1211.
Insulation appears to transition through seal area. Penetrant appears to be concentrically positioned and annulus is equal all the way around.

Sketch:

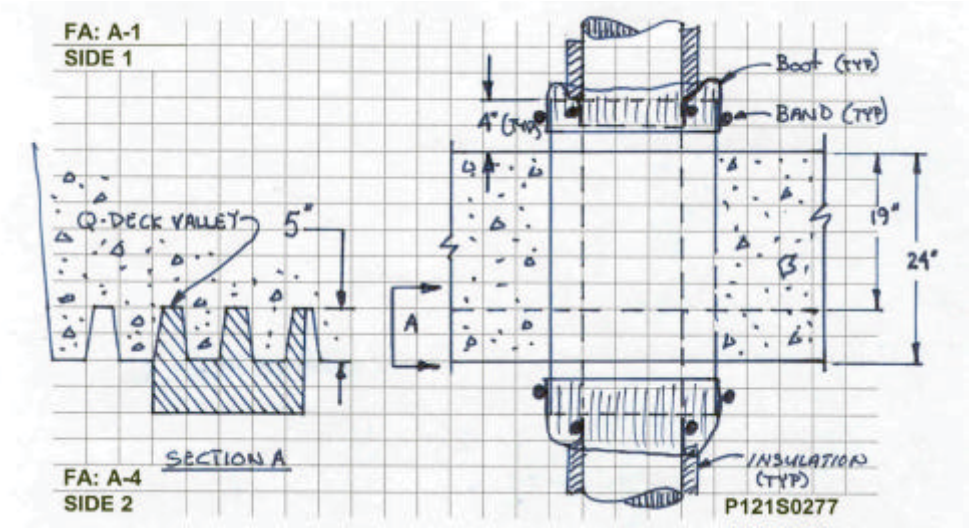

Penetration Seal Data

Appendix: B9

Photos: P121S0277

Fire Area A-1 (Side 1)

Fire Area A-1 (Side 1)

Fire Area A-4 (Side 2)

Fire Area A-4 (Side 2)

Penetration Seal Data

Appendix: B9

Heat Affected Zone Review: P121S0277

Fire Area (Side 1) A-1

No issues within Heat Affected Zone

Fire Area (Side 2) A-4

No issues within Heat Affected zone

Review Distances

(Reference M-663-00017A, Figure 7.2.3-1)

14" Pipe			
L1 & L2 Dist. (ft)	Temp. (°F)	R1 Radius (in)	R2 Radius (in)
0.5	1721	4.6	5.9
1	1539	3.8	5.1
1.5	1377	3	4.4
2	1233	2.4	3.8
2.5	1105	1.8	3.2
3	991	1.3	2.7
3.5	889	0.9	2.2
4	799	0.4	1.8
4.5	719	0.1	1.4
5	647	Contact	1.1
5.5	583		0.8
6	527		0.6
6.5	477		0.3
7	432		0.1
7.5	392		Contact

Side 1 Photo

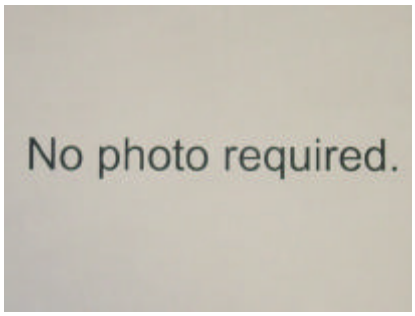

Side 2 Photo

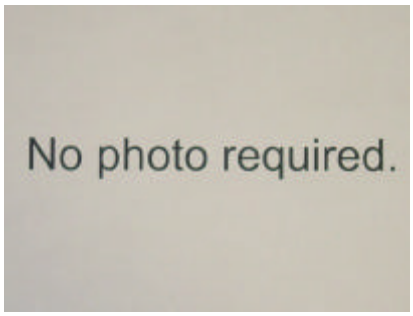

Sketch

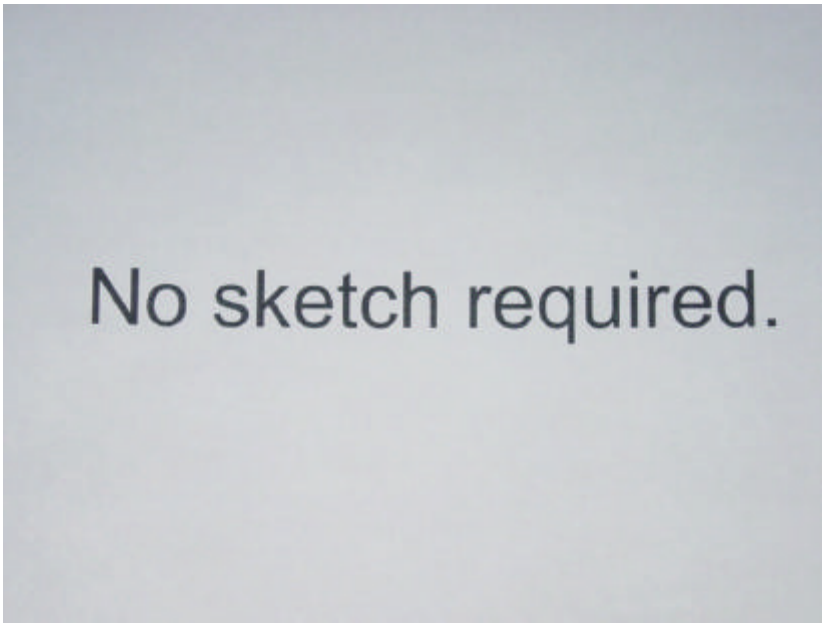

Penetration Seal Data

Appendix: B9

Penetration #: P121S0278

Penetration Type: RB-1 **Fire Area (Side 1):** A-1 **Fire Area (Side 2):** A-4

Loc./Elev.: 1988'-0" **M-0X Dwg:** M-0X1211

1. **Barrier Thickness:** 19"
2. **Opening Size:** 22" D
3. **Penetrants:** (1) 14"P
4. **Sealant Type:** Radflex
5. **Damming Side1:** Boot
6. **Damming Side 2:** Boot
7. **Damming Continuity (Acc/Rej):** N/A
8. **Boot Condition (Acc/Rej):** Accept
9. **Sealant Depth:** Assumed Per Detail
10. **Annular Gap (smallest):** 2"
11. **Gap between pen:** N/A
12. **Barrier Type:** F R W
13. **Opening Sleeved or Concrete:** Steel
14. **Pipe Insulated:** No

Wayne Aregood
Prepared By:

Jeff Suter
Reviewed By:

Walkdown Comments:
Slab thickness determined from drawing C-0C1211.

Sketch:

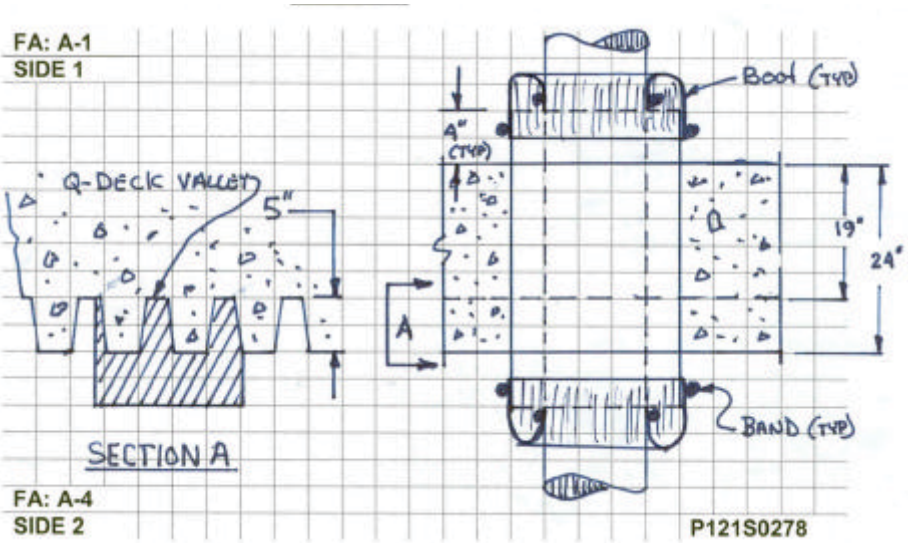

Penetration Seal Data

Appendix: B9

Photos: P121S0278

Fire Area A-1 (Side 1)

Fire Area A-1 (Side 1)

Fire Area A-4 (Side 2)

Fire Area A-4 (Side 2)

Penetration Seal Data

Appendix: B9

Heat Affected Zone Review: P121S0278

Fire Area (Side 1) A-1

No issues within Heat Affected Zone

Fire Area (Side 2) A-4

1. 4U3F1N, 1-1/2" Cond.: Not within Heat Affected Zone.

Review Distances

(Reference M-663-00017A, Figure 7.2.3-1)

14" Pipe			
L1 & L2 Dist. (ft)	Temp. (°F)	R1 Radius (in)	R2 Radius (in)
0.5	1721	4.6	5.9
1	1539	3.8	5.1
1.5	1377	3	4.4
2	1233	2.4	3.8
2.5	1105	1.8	3.2
3	991	1.3	2.7
3.5	889	0.9	2.2
4	799	0.4	1.8
4.5	719	0.1	1.4
5	647	Contact	1.1
5.5	583		0.8
6	527		0.6
6.5	477		0.3
7	432		0.1
7.5	392		Contact

Side 1 Photo

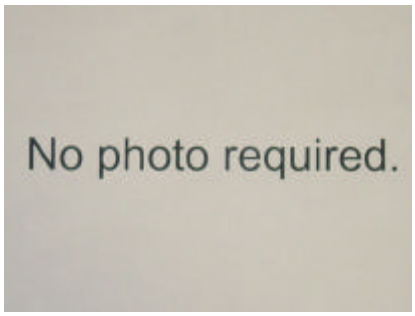

Side 2 Photo

Sketch

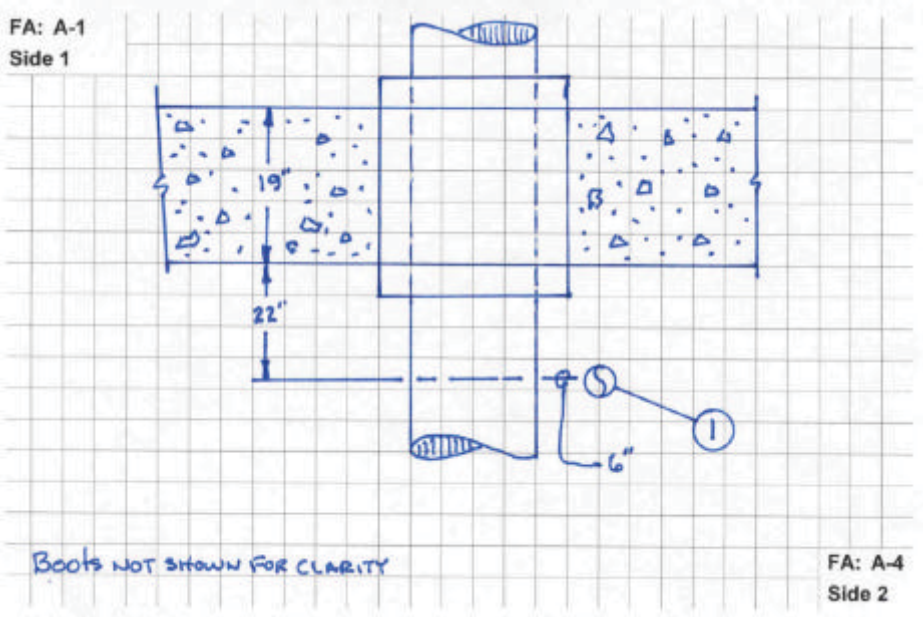

Penetration Seal Data

Appendix: B9

Penetration #: P122S0347

Penetration Type: RB-1 **Fire Area (Side 1):** A-1 **Fire Area (Side 2):** A-2

Loc./Elev.: 1988'-0" **M-0X Dwg:** M-0X1221

1. **Barrier Thickness:** 22"
2. **Opening Size:** 16"D
3. **Penetrants:** (1) 12"P
4. **Sealant Type:** Radflex
5. **Damming Side1:** Boot
6. **Damming Side 2:** Boot
7. **Damming Continuity (Acc/Rej):** N/A
8. **Boot Condition (Acc/Rej):** Accept
9. **Sealant Depth:** Assumed Per Detail
10. **Annular Gap (smallest):** 1"
11. **Gap between pen:** N/A
12. **Barrier Type:** F R W
13. **Opening Sleeved or Concrete:** Steel
14. **Pipe Insulated:** No

Wayne Aregood
Prepared By:

Jeff Suter
Reviewed By:

Walkdown Comments:

Slab thickness determined from drawing C-0C1211.

Sketch:

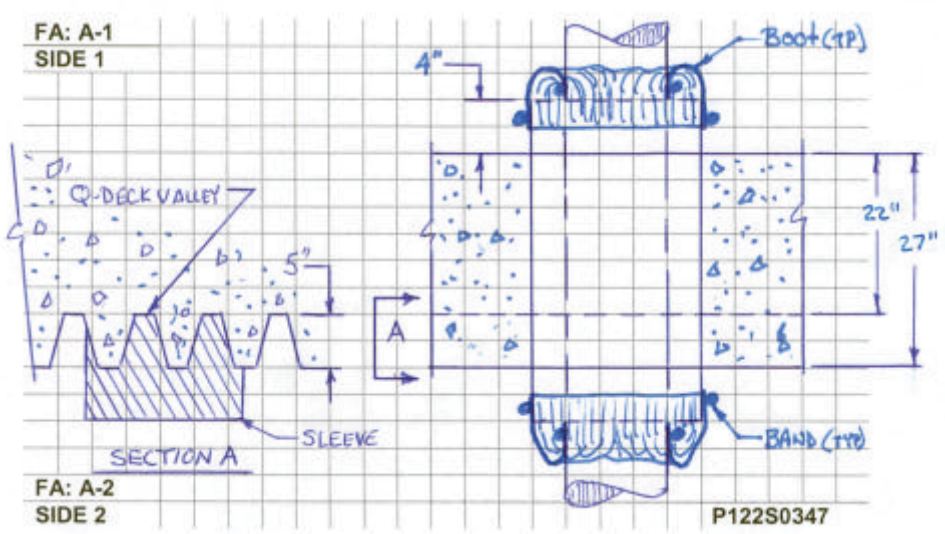

Penetration Seal Data

Appendix: B9

Photos: P122S0347

Fire Area A-1 (Side 1)

Fire Area A-1 (Side 1)

Fire Area A-2 (Side 2)

Fire Area A-2 (Side 2)

Penetration Seal Data

Appendix: B9

Heat Affected Zone Review: P122S0347

Fire Area (Side 1) A-1

No issues within Heat Affected Zone

Fire Area (Side 2) A-2

No issues within Heat Affected Zone

Review Distances

(Reference M-663-00017A, Figure 7.2.3-1)

12" Pipe			
L1 & L2 Dist. (ft)	Temp. (°F)	R1 Radius (in)	R2 Radius (in)
0.5	1712	4.6	5.9
1	1524	3.7	5.1
1.5	1357	3	4.3
2	1209	2.3	3.6
2.5	1078	1.7	3.1
3	962	1.2	2.5
3.5	860	0.7	2.1
4	769	0.3	1.7
4.5	689	Contact	1.3
5	618		1
5.5	555		0.7
6	499		0.4
6.5	450		0.2
7	406		0
7.5	368		Contact

Side 1 Photo

No photo required.

Side 2 Photo

No photo required.

Sketch

No sketch required.

Penetration Seal Data

Appendix: B9

Penetration #: P134W2053

Penetration Type: RB-8 **Fire Area (Side 1):** A-8 **Fire Area (Side 2):** A-24

Loc./Elev.: 2012'-3" **M-0X Dwg:** M-1X1921

1. **Barrier Thickness:** 36"
2. **Opening Size:** 18"D
3. **Penetrants:** (1) 12"P
4. **Sealant Type:** Radflex/foam
5. **Damming Side1:** N/A
6. **Damming Side 2:** N/A
7. **Damming Continuity (Acc/Rej):** N/A
8. **Boot Condition (Acc/Rej):** Accept
9. **Sealant Depth:** 34" **
10. **Annular Gap (smallest):** 2"
11. **Gap between pen:** N/A
12. **Barrier Type:** F W
13. **Opening Sleeved or Concrete:** Steel
14. **Pipe Insulated:** No

Jeff Suter
Prepared By:

Wayne Aregood
Reviewed By:

Walkdown Comments:

Barrier thickness determined by Drawing C-0C1341 (wsa). ** Sealant depth determined by inspection report.

Sketch:

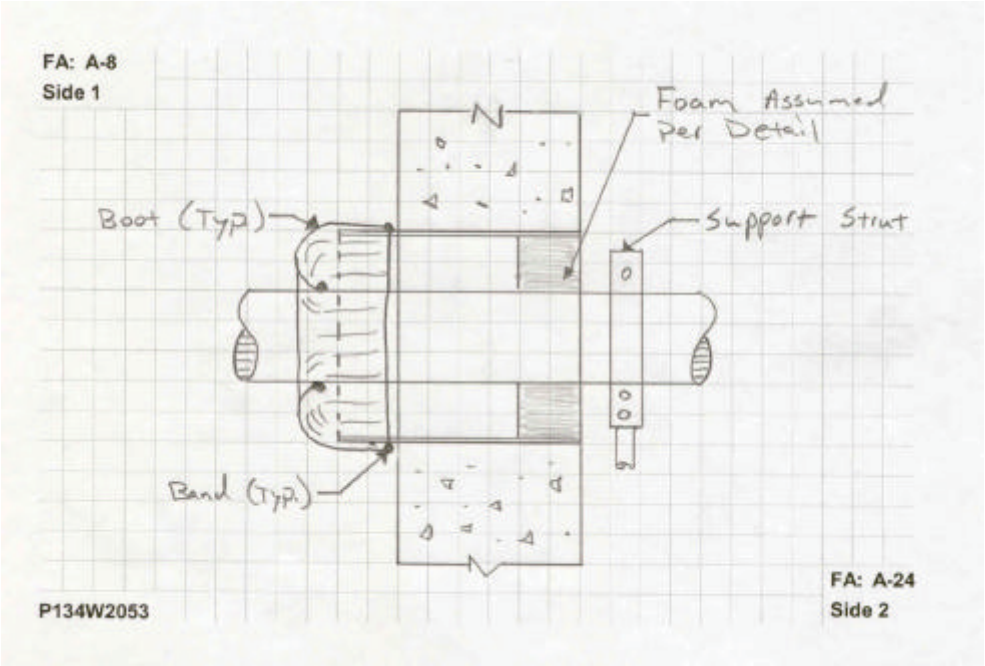

Penetration Seal Data

Appendix: B9

Photos: P134W2053

Fire Area A-8 (Side 1)

Fire Area A-8 (Side 1)

Fire Area A-24 (Side 2)

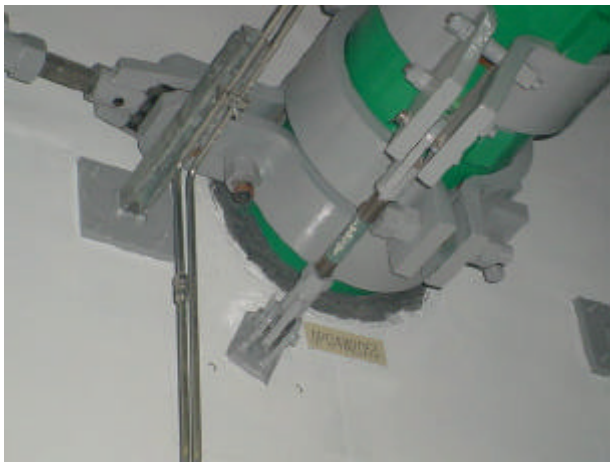

Fire Area A-24 (Side 2)

Penetration Seal Data

Appendix: B9

Heat Affected Zone Review: P134W2053

Fire Area (Side 1) A-8

1. 2" Cond. 5U3A1T, utility power, not within Heat Affected Zone
2. Two (2) 1/2" lighting conduit, not within Heat Affected Zone

Fire Area (Side 2) A-24

No issues within Heat Affected Zone

Review Distances

(Reference M-663-00017A, Figure 7.2.3-1)

12" Pipe			
L1 & L2 Dist. (ft)	Temp. (°F)	R1 Radius (in)	R2 Radius (in)
0.5	1712	4.6	5.9
1	1524	3.7	5.1
1.5	1357	3	4.3
2	1209	2.3	3.6
2.5	1078	1.7	3.1
3	962	1.2	2.5
3.5	860	0.7	2.1
4	769	0.3	1.7
4.5	689	Contact	1.3
5	618		1
5.5	555		0.7
6	499		0.4
6.5	450		0.2
7	406		0
7.5	368		Contact

Side 1 Photo

No photo required.

Side 2 Photo

No photo required.

Sketch

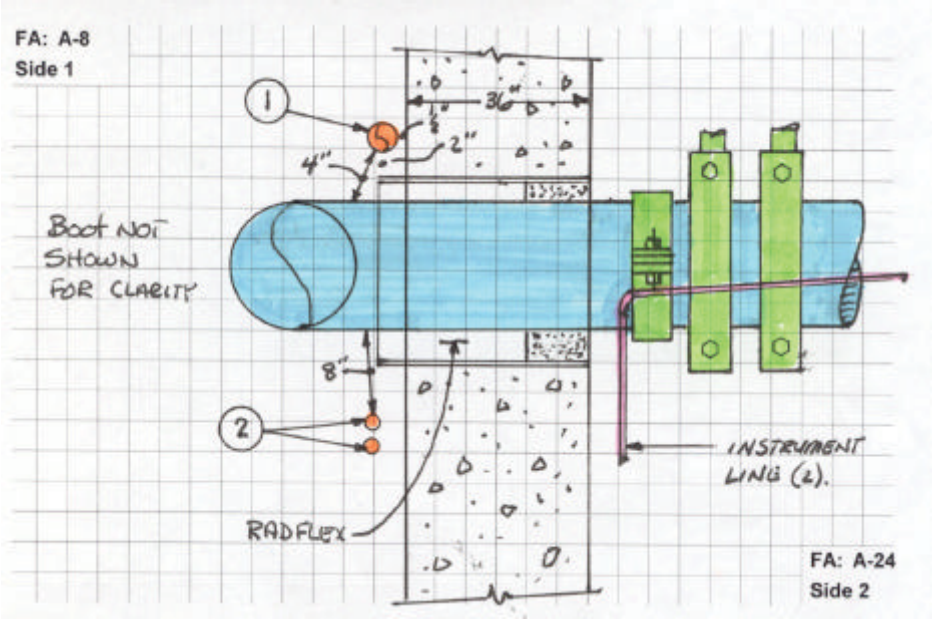

Penetration Seal Data

Appendix: B9

Penetration #: P142W1933

Penetration Type: RB-8 **Fire Area (Side 1):** A-16 **Fire Area (Side 2):** A-10

Loc./Elev.: 2035'-0" **M-0X Dwg:** M-1X1919

1. **Barrier Thickness:** 36"
2. **Opening Size:** 24"D
3. **Penetrants:** (1) 18"P
4. **Sealant Type:** Foam/Radflex
5. **Damming Side1:** N/A
6. **Damming Side 2:** N/A
7. **Damming Continuity (Acc/Rej):** N/A
8. **Boot Condition (Acc/Rej):** Accept
9. **Sealant Depth:** 36.5" Radflex
10. **Annular Gap (smallest):** 1-1/2"
11. **Gap between pen:** N/A
12. **Barrier Type:** F R
13. **Opening Sleeved or Concrete:** Steel
14. **Pipe Insulated:** Yes

Jeff Suter
Prepared By:

Wayne Aregood
Reviewed By:

Walkdown Comments:

Barrier thickness based on drawing C-1C1421. 1-1/2" foam damming per original inspection record and 2" sleeve extension will produce a 36-1/2" radflex seal (wsa). Sleeve extender per FCR 1-BBI-091.

Sketch:

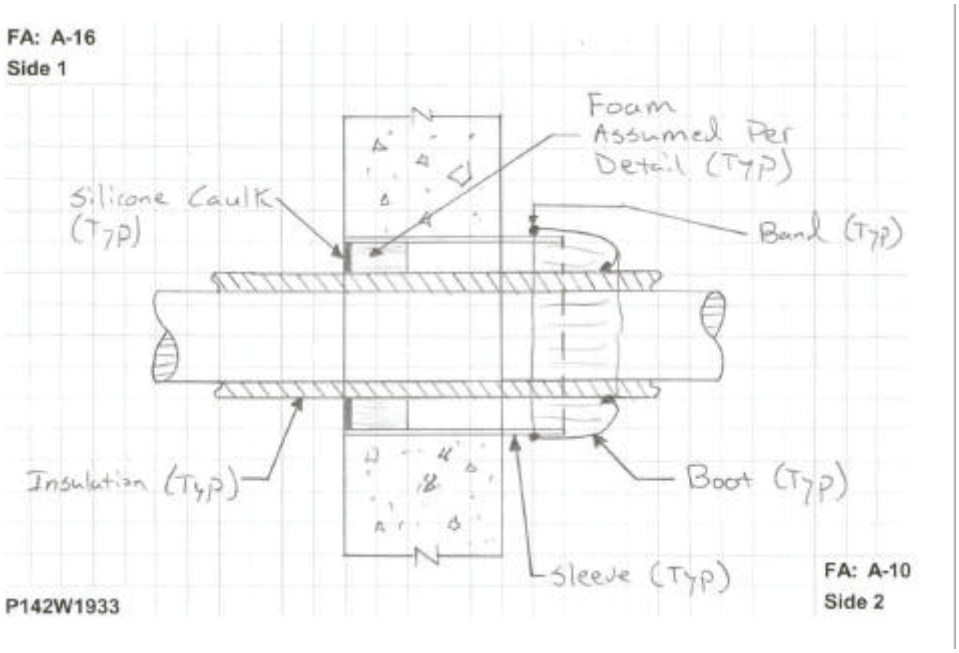

Penetration Seal Data

Appendix: B9

Photos: P142W1933

Fire Area A-16 (Side 1)

Fire Area A-16 (Side 1)

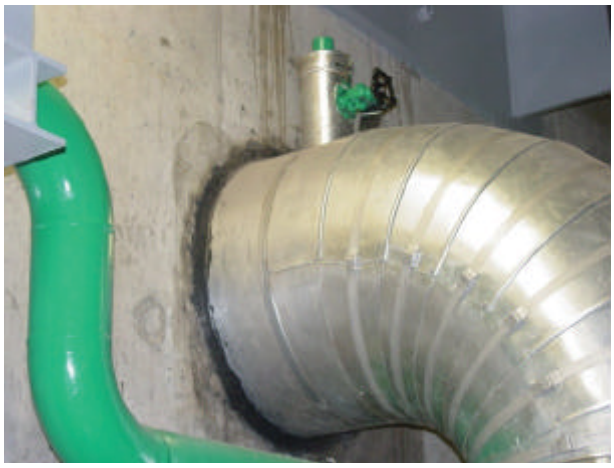

Fire Area A-10 (Side 2)

Fire Area A-10 (Side 2)

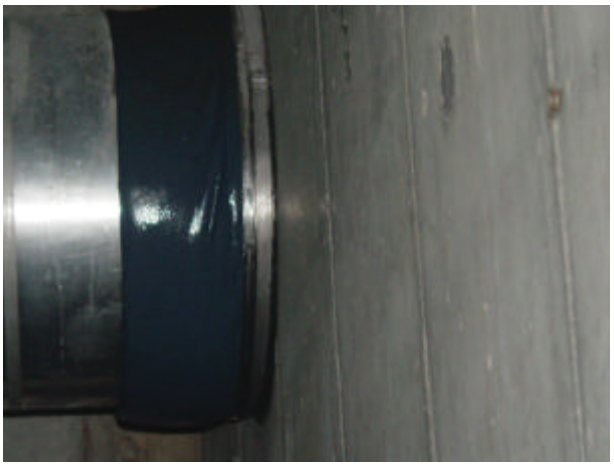

Penetration Seal Data

Appendix: B9

Heat Affected Zone Review: P142W1933

Fire Area (Side 1) A-16

No issues within Heat Affected Zone

Fire Area (Side 2) A-10

No issues within Heat Affected Zone

Review Distances

(Reference M-663-00017A, Figure 7.2.3-1)

18" Pipe			
L1 & L2 Dist. (ft)	Temp. (°F)	R1 Radius (in)	R2 Radius (in)
0.5	1741	4.7	6
1	1576	3.9	5.3
1.5	1426	3.3	4.6
2	1292	2.7	4
2.5	1171	2.1	3.5
3	1062	1.6	3
3.5	964	1.2	2.5
4	875	0.8	2.1
4.5	795	0.4	1.8
5	724	0.1	1.5
5.5	659	Contact	1.2
6	600		0.9
6.5	548		0.7
7	501		0.5
7.5	458		0.3
8	419		0.1
8.5	385		Contact

Side 1 Photo

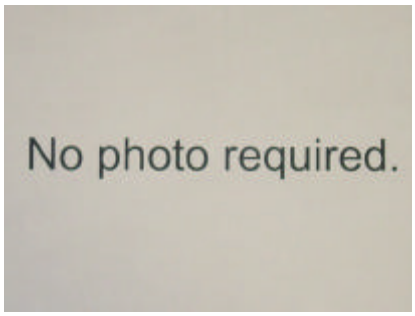

Side 2 Photo

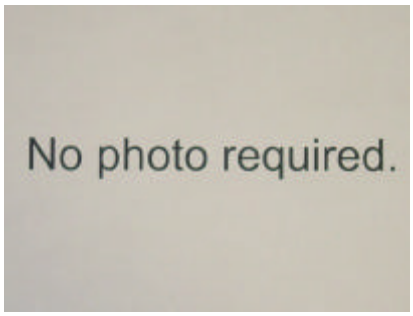

Sketch

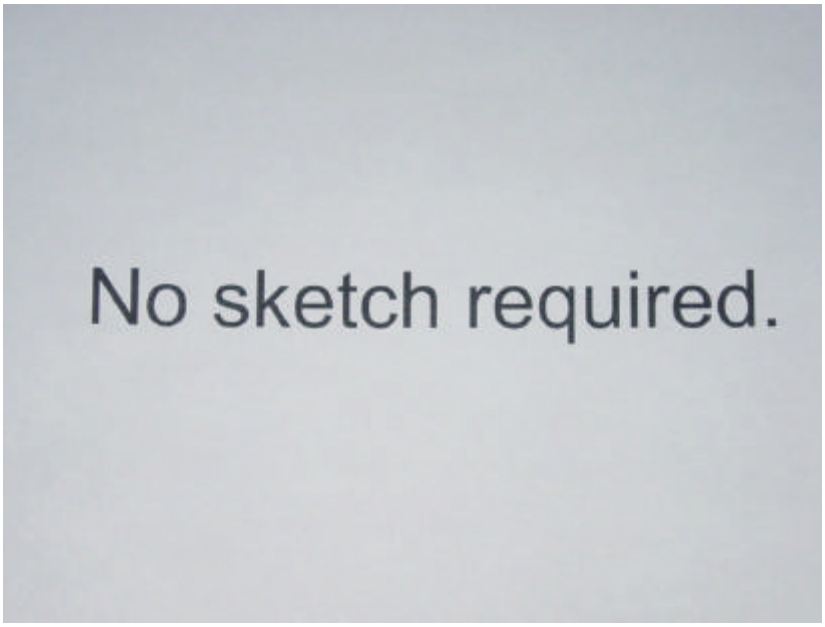

WOLF CREEK
NUCLEAR OPERATING CORPORATION

M-663-00017A

Attachment B10

Fire Protection Evaluation For Penetration Openings With Steel Plates

Rev. No.	Prepared By	Date	Reviewed By	Date
W01	Wayne S Aregood	08/20/05	Jeff Suter	08/20/05

Table of Contents

Revision Log 3

1.0 Purpose..... 4

2.0 Scope 4

3.0 References..... 4

4.0 Evaluation 5

5.0 Conclusions..... 7

Appendix B10-1, Penetration Seal Data…….……. (6 Total Pages)

Revision Log

Revision	Reason for Revision
W01	Original Issue

1.0 Purpose

1.1 The purpose of this document is to evaluate existing penetration seals that are not directly bounded to the typical detail limitations established in M-663-00017. This evaluation was conducted in effort to satisfy regulatory expectation regarding qualification and documentation of fire barrier penetration seals, as discussed in NRC Information Notice 88-04. This evaluation was conducted in accordance with the guidance of NRC Generic Letter 86-10.

2.0 Scope

2.1 The Table I penetrations in relation to the design requirements discussed in Section 5.1.

2.2 Refer to Section 7.0 of M-663-00017A for a cross-reference list of penetrations within Table I that are evaluated for additional seal parameters that do not satisfy the typical detail limitations of M-663-00017. In these instances, the potential cumulative affects of multiple unbounded attributes were considered for each penetration of concern.

3.0 References

3.1 NRC Generic Letter 86-10, Implementation of Fire Protection Requirements, dated April 24, 1986

3.2 NRC Information Notice 88-04, “Inadequate Qualification and Documentation of Fire Barrier Penetration Seals”.

3.3 10 CFR 50 Appendix R, Fire Protection Program For Nuclear Power Facilities Operating Prior To January 1, 1979

3.4 LER 87-10, Technical Specification Violations – Inoperable Fire Barriers Caused By Personnel Errors

3.5 M-663-00017, Penetration Seal Typical Details, Rev. W20

3.6 Underwriters Laboratory Fire Resistance Directory (UL System CAJ0010), 2002 Edition

4.0 Assumptions

4.1 It is assumed that existing penetration seal materials have been installed as required by applicable typical design details and procedures. This is an acceptable assumption based on a review of the Quality Control documentation maintained during initial penetration seal installation activities and the intrusive inspections conducted to address LER 87-10, regarding seal material depth.

5.0 Evaluation

5.1 Assessment of Condition to Design Requirements

Each penetration opening identified in Table I was sealed with a typical detail from M-663-00017, with all or part of the annulus opening sealed on at least one barrier side by a welded steel plate. The steel plate protection ensures that that the opening portion protected by steel will not allow the passage of flame or hose stream comparable to UL System CAJ0010. This UL system, reveals that a minimum 0.057" (16 gauge) thick steel plate on one barrier side provides a 3-hour Fire (F) rated seal. In all cases, the steel plate thickness for the Table I penetrations exceed 0.057". Also, the plates are physically attached (welded) to sleeves/penetrant such that fire exposure would not distort the plate protective closure. However, there is no direct testing demonstrating a Temperature (T) rating for the steel plates. Therefore, further review is required to assess acceptability.

Additionally, the penetrant size for P141S1034 exceeds that allowed by assigned typical detail M-1. This issue is addressed within this evaluation, since the heat affected zone review for the steel plate effectively bounds the review necessary for the large pipe penetrant.

Table I identifies penetrations with steel enclosure plates. Penetration inspection results are documented in Appendix B10.

TABLE I

Penetrations with Steel Closure Plates

Penetration Number	Communicating Fire Areas		Typical Detail	Primary Opening Size	Penetrant Size	Steel Plate Exposed Area	Comments/Disposition:
	Side 1	Side 2					
P134W2653	A-6	T-2	FB-1	10"	(1) 3/4" P (1) 1/2" P	50 in^2	FB-1 seal with multiple penetrants and the secondary annulus gap sealed with steel plates on both sides of the barrier. See paragraph 5.2.
P141S1034	A-16	A-8	M-1	24"	18" P	198 in^2	M-1 seal with a large bore pipe penetrant and the topside annulus sealed with closure plate. Bottom side damming found acceptable. See paragraph 5.2.

5.2 Evaluation of Condition

Penetration P134W2653 is a wall seal that is contains two separate penetration sleeves with end plates welded to the embedded sleeve and to the penetration sleeve. This design creates a secondary annular gap that is closed by a welded ¼" steel plate on both sides of the barrier. The primary penetration sleeve is sealed in accordance with the limitations of the FB-1 typical detail, and is bounded. Therefore, this evaluation only applies to the secondary annulus enclosure plates that are integral to the barrier and directly affect T rating requirements.

Penetration P141S1034 is a floor seal that is constructed with a single sleeve. The topside of the sleeve is closed with a ½" steel plate, welded from the pipe penetrant to the sleeve, thus establishing a pipe restraint at this location. This design creates a single annulus gap that is also sealed with an M-1 (Silicone Foam with bottom side damming) typical detail. Additional Silicone Foam fill could not be determined from the original inspection documents. Therefore, the sealant depth is assumed to be the minimum required 6". Because the annulus is sealed with at least 6" of RTV Foam with 1" damming board on the bottom side, it is reasonable to conclude that the topside steel plate will enhance the F rating performance of the installed M-1 detail. However, the penetration is not considered T rated due to the large unbounded penetrant size.

M-663-00017 identifies that where piping penetrations exist that do not satisfy T rating requirements, a seal assembly with an F rating corresponding to the hourly rating of the associated barrier is acceptable, provided evaluation demonstrates that exposed insitu combustibles and redundant post fire safe shutdown (PFSSD) equipment/circuits on the unexposed barrier side will not be detrimentally affected by the increased penetrant temperatures.

In effort to evaluate fire area impact, field walkdowns and comprehensive assessment reviews, documented in Appendix B10, were conducted for each penetration of concern. This review was completed in accordance with the criteria and review methodology established in M-663-00017A Section 7.2.3 for non-T rated penetrations.

The review identified that no exposed insitu combustibles or PFSSD circuits are located within the heat affected zone. Each of the penetrations satisfies the review criteria of M-663-00017 where T rating requirements are not met. Therefore, the penetrations are acceptable, as this evaluation demonstrates reasonable assurance that the penetration seals do not present a negative impact to PFSSD capability.

5.3 Post Fire Safe Shutdown Impact

There is no impact to PFSSD systems or components as a result of this evaluation. The Table I penetrations are 3-hour F rated. The comprehensive walkdown review for each of these penetrations revealed that no exposed insitu combustibles or PFSSD circuits are negatively affected by the non T rated penetrations.

6.0 Conclusions

Based on the above discussions, it is reasonable to conclude that the Table I penetration seals are acceptable as 3-hour F rated and will perform their intended function, regardless of not achieving a T rating. The penetration seals satisfy regulatory requirements and commitments as well as WCNOC Fire Protection Program requirements, to prevent spread of fire from one fire area to another. It has also been determined through this evaluation that the lack of a T rating will not affect the plant's ability to achieve and maintain PFSSD.

Penetration Seal Data

Appendix: B10

Penetration #: P134W2653

Penetration Type: FB-1 **Fire Area (Side 1):** A-6 **Fire Area (Side 2):** T-2

Loc./Elev.: 2007'-6" **M-0X Dwg:** M-1X1950

1. **Barrier Thickness:** 24"
2. **Opening Size:** 6"D
3. **Penetrants:** (1)3/4"P, (1)1/2"P
4. **Sealant Type:** Ceramic Fiber
5. **Damming Side1:** Boot
6. **Damming Side 2:** Boot
7. **Damming Continuity (Acc/Rej):** N/A
8. **Boot Condition (Acc/Rej):** Accept
9. **Sealant Depth:** Assumed Per Detail
10. **Annular Gap (smallest):** 1"
11. **Gap between pen:** 1/2"
12. **Barrier Type:** A F
13. **Opening Sleeved or Concrete:** Steel
14. **Pipe Insulated:** No

Wayne Aregood
Prepared By:

Jeff Suter
Reviewed By:

Walkdown Comments:

Sleeve annulus is sealed with welded 1/4" plate (from wall sleeve to penetrant sleeve) both sides. Internal sleeve space configuration is unknown.

Sketch:

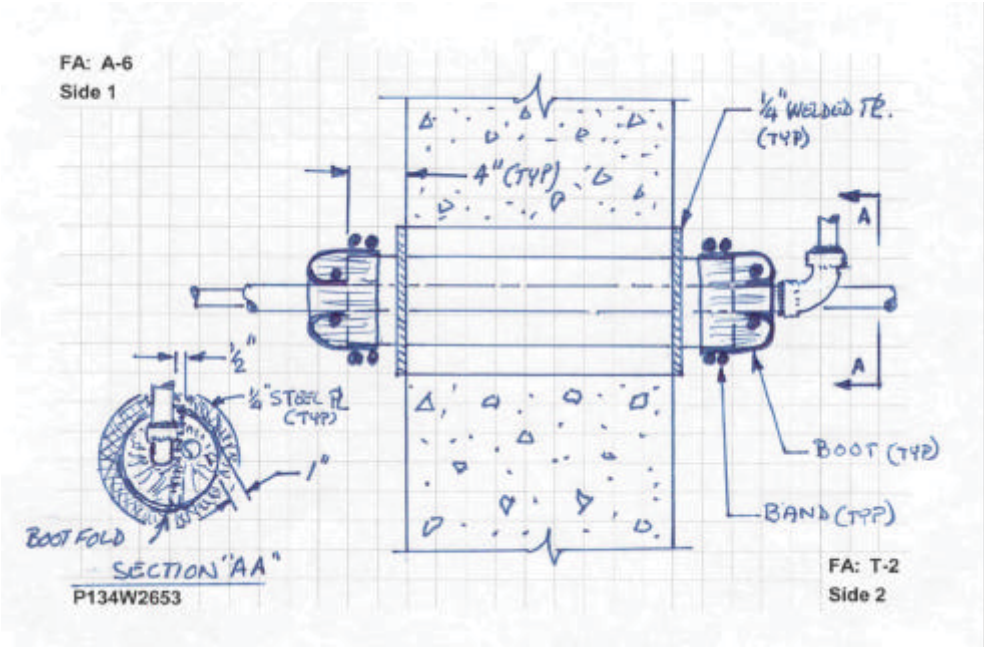

Penetration Seal Data

Appendix: B10

Photos: P134W2653

Fire Area A-6 (Side 1)

Fire Area A-6 (Side 1)

Fire Area T-2 (Side 2)

Fire Area T-2 (Side 2)

Penetration Seal Data

Appendix: B10

Heat Affected Zone Review: P134W2653

Fire Area (Side 1) A-6

No issues with Heat Affected Zone

Fire Area (Side 2) T-2

No issues within Heat Affected Zone

Review Distances

(Reference M-663-00017A, Figure 7.2.3-1)

1/2" & 3/4" Pipes (2" Pipe Data Used)			
L1 & L2 Dist. (ft)	Temp. (°F)	R1 Radius (in)	R2 Radius (in)
0.5	1557	3.9	5.2
1	1262	2.5	3.9
1.5	1026	1.5	2.8
2	836	0.6	2.0
2.5	684	Contact	1.3
3	562		0.7
3.5	465		0.3
4	386		Contact

Side 1 Photo

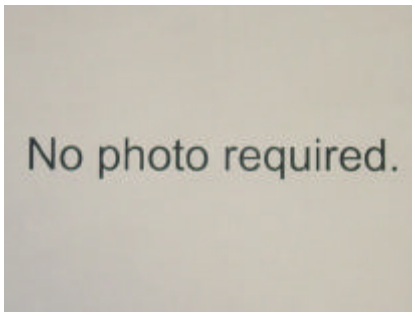

Side 2 Photo

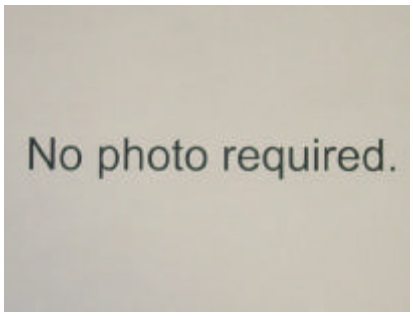

Sketch

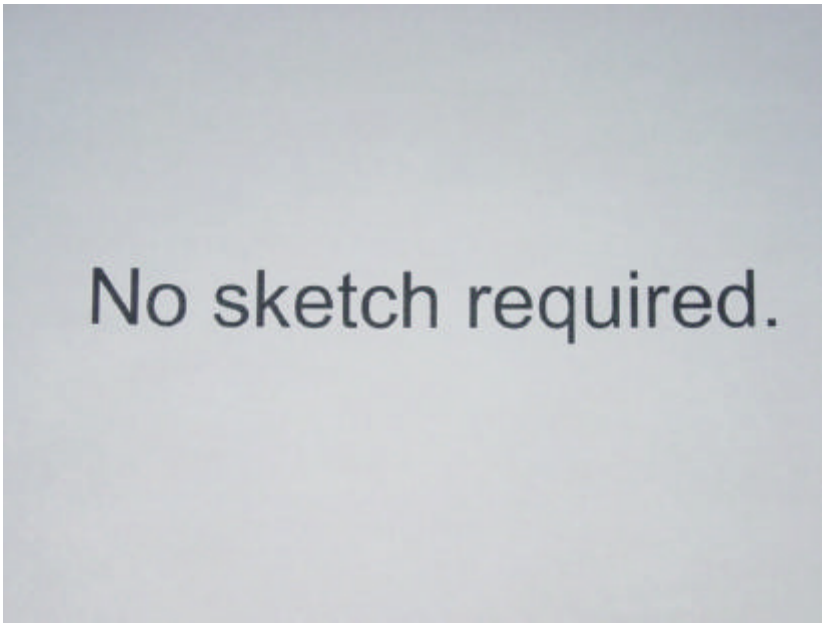

Penetration Seal Data

Appendix: B10

Penetration #: P141S1034

Penetration Type: M-1 **Fire Area (Side 1):** A-16 **Fire Area (Side 2):** A-8

Loc./Elev.: 2026'-0" **M-0X Dwg:** M-1X1411

1. **Barrier Thickness:** 20"
2. **Opening Size:** 24"D
3. **Penetrants:** (1)18"P
4. **Sealant Type:** Foam
5. **Damming Side1:** Steel plate welded to sleeve
6. **Damming Side 2:** Flush with barrier
7. **Damming Continuity (Acc/Rej):** Accept
8. **Boot Condition (Acc/Rej):** N/A
9. **Sealant Depth:** 6"
10. **Annular Gap (smallest):** 1/4"
11. **Gap between pen:** N/A
12. **Barrier Type:** F
13. **Opening Sleeved or Concrete:** Steel
14. **Pipe Insulated:** No

Jeff Suter
Prepared By:

Wayne Aregood
Reviewed By:

Walkdown Comments:

Slab thickness based on C-0C1411. Top side of penetration is covered with a welded steel plate. Foam depth is assumed to be the 6" minimum allowed for a mechanical detail. Original Inspection Record documents 6" blind seal depth due to welded steel anchor plate (wsa).

Sketch:

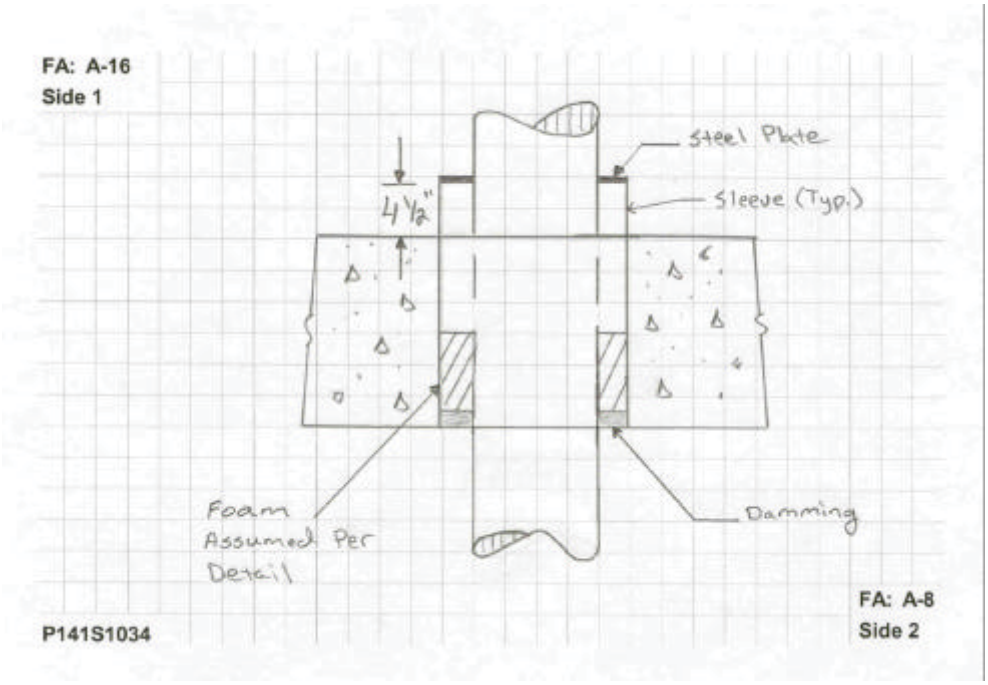

Penetration Seal Data

Appendix: B10

Photos: P141S1034

Fire Area A-16 (Side 1)

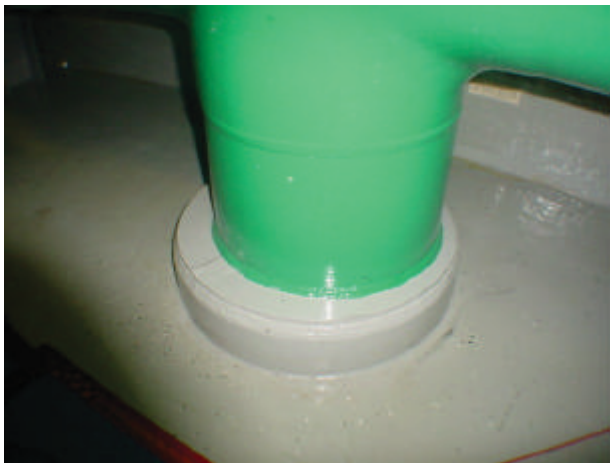

Fire Area A-16 (Side 1)

Fire Area A-8 (Side 2)

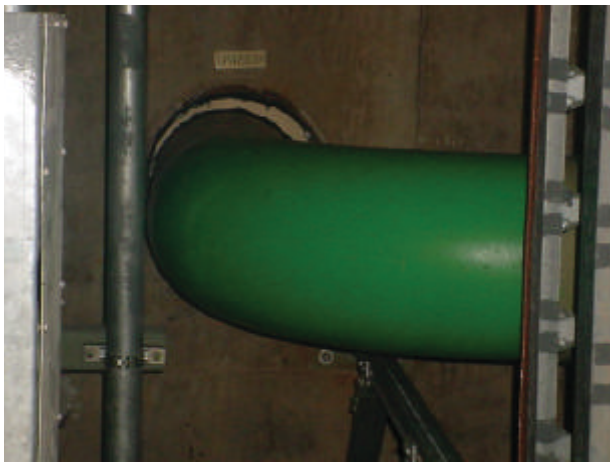

Fire Area A-8 (Side 2)

Penetration Seal Data

Appendix: B10

Heat Affected Zone Review: P141S1034

Fire Area (Side 1) A-16

No issues within Heat Affected Zone

Fire Area (Side 2) A-8

No issues within Heat Affected Zone

Review Distances

(Reference M-663-00017A, Figure 7.2.3-1)

18" Pipe			
L1 & L2 Dist. (ft)	Temp. (°F)	R1 Radius (in)	R2 Radius (in)
0.5	1741	4.7	6
1	1576	3.9	5.3
1.5	1426	3.3	4.6
2	1292	2.7	4
2.5	1171	2.1	3.5
3	1062	1.6	3
3.5	964	1.2	2.5
4	875	0.8	2.1
4.5	795	0.4	1.8
5	724	0.1	1.5
5.5	659	Contact	1.2
6	600		0.9
6.5	548		0.7
7	501		0.5
7.5	458		0.3
8	419		0.1
8.5	385		Contact

Side 1 Photo

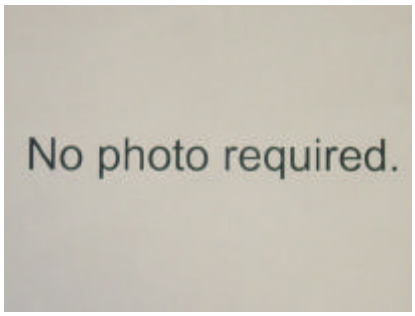

Side 2 Photo

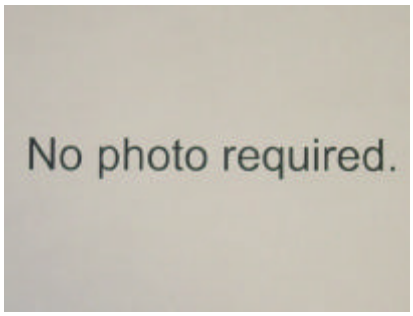

Sketch

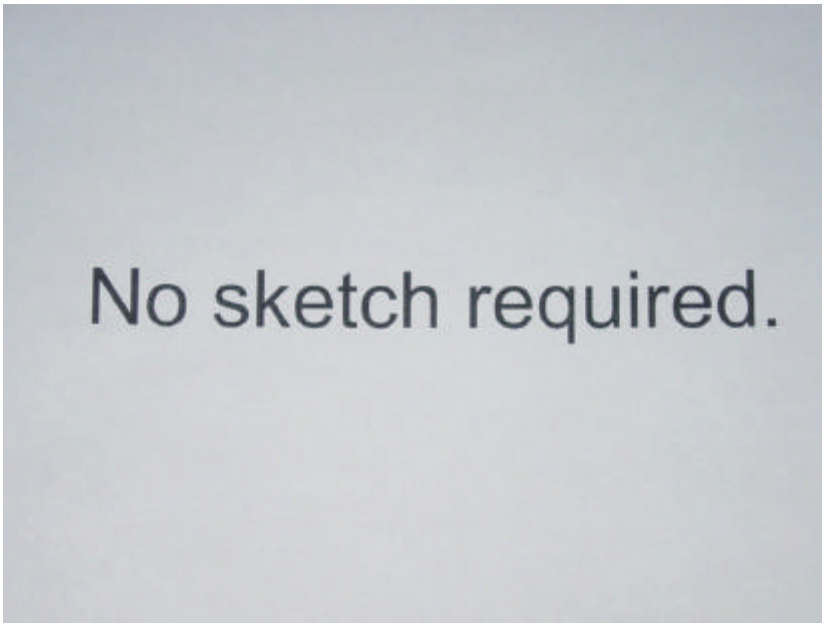

WOLF CREEK
NUCLEAR OPERATING CORPORATION

M-663-00017A

Attachment B11

Fire Protection Evaluation For Penetrations Interfacing With Seismic Gap Seals

Rev. No.	Prepared By	Date	Reviewed By	Date
W01	Wayne S Aregood	08/19/05	Jeff Suter	08/19/05

Table of Contents

Revision Log 3

1.0 Purpose 4

2.0 Scope 4

3.0 References 4

4.0 Evaluation 5

5.0 Conclusions 7

Appendix B11, Penetration Seal Data ..... (12 Total Pages)

Revision Log

Revision	Reason for Revision
W01	Original Issue

1.0 Purpose

1.1 The purpose of this document is to evaluate existing penetration seals that are not directly bounded to the typical detail limitations established in M-663-00017, or the penetration seal configuration is unique enough to potentially affect performance of the penetration seal. This evaluation was conducted in effort to satisfy regulatory expectation regarding qualification and documentation of fire barrier penetration seals, as discussed in NRC Information Notice 88-04. This evaluation was conducted in accordance with the guidance of NRC Generic Letter 86-10.

2.0 Scope

2.1 The Table I penetrations in relation to the design requirements discussed in Section 5.1.

2.2 Refer to Section 7.0 of M-663-00017A for a cross-reference list of penetrations within Table I that are evaluated for additional seal parameters that do not satisfy the typical detail limitations of M-663-00017. In these instances, the potential cumulative affects of multiple unbounded attributes were considered for each penetration of concern.

3.0 References

3.1 NRC Generic Letter 86-10, Implementation of Fire Protection Requirements, dated April 24, 1986

3.2 NRC Information Notice 88-04, “Inadequate Qualification and Documentation of Fire Barrier Penetration Seals”.

3.3 10 CFR 50 Appendix R, Fire Protection Program For Nuclear Power Facilities Operating Prior To January 1, 1979

3.4 LER 87-10, Technical Specification Violations – Inoperable Fire Barriers Caused By Personnel Errors

3.5 M-663-00017, Penetration Seal Typical Details, Rev. W20

3.6 RER 2004-002, Reportability Review for PIR 2004-0234

3.7 PIR 2004-0234, Potential Unrated Seismic Gap Seal Design Detail 5 from C-1029.

4.0 Assumptions

4.1 It is assumed that existing penetration seal materials have been installed as required by applicable typical design details and procedures. This is an acceptable assumption based on a review of the Quality Control documentation maintained during initial penetration seal installation activities and the intrusive inspections conducted to address LER 87-10, regarding seal material depth.

4.2 It is assumed that the entire Table I penetration seal and seismic gap interfaces were installed with similar vertically positioned ceramic fiberboard separators as found in the seismic gap between Penetration Seals P621S0179 and P621S0180. These seismic gap interfaces were examined internally during the seismic gap interface exploratory effort conducted in response to seismic gap seal continuity concerns documented in References 3.6 and 3.7. The intrusive inspections revealed vertically positioned ceramic fiberboard separators between the seismic gap seal and the Silicone Foam seal. This is an acceptable assumption based on installation techniques and practices that would necessitate the use of ceramic fiberboard to ensure containment of sealant material during initial Silicone Foam seal installation.

5.0 Evaluation

5.1 Assessment of Condition to Design Requirements

Each penetration opening identified in Table I was sealed with an approved M-663-00017 typical detail. The seal interfaces with a fire rated seismic gap seal detail SG-2. Each penetration seal type is independently bounded by the referenced typical detail. However, the Silicone Foam seal interface with a fire rated seismic gap seal is not directly bounded by testing. Refer to Appendix B11 for relevant Table I penetration seal data.

TABLE I

Penetration Seal and Seismic Gap Interfaces

Penetration Number	Communicating Fire Areas		Typical Detail	Penetrating Items	Comment/Disposition:
	Side 1	Side 2			
P621S0179	F-4	F-2	E-2A	Conduits: (1) 1½” Cond. (2) 2” Cond. (1) 3” Cond.	9” Silicone Foam with top cap and two separate bottom side damming boards. Vertical ceramic fiber damming board positioned on both sides separating seal from seismic gap design. Seismic gap and Silicone Foam interface was intrusively inspected in response to Ref 3.6 and 3.7.
P621S0180	F-4	F-3	M-6A	Spare	9” Silicone Foam with top cap and two separate bottom side damming boards. Vertical ceramic fiber damming board positioned on both sides separating seal from seismic gap design. Seismic gap and Silicone Foam interface was intrusively inspected in response to Ref 3.6 and 3.7.
P631S0119	F-7	F-4	E-2A	Conduits: (3) 2” Cond. (1) 3” Cond.	9” Silicone Foam with top cap and two separate bottom side damming boards. Vertical ceramic fiber damming board positioned on both sides separating seal from seismic gap design.

Penetration Number	Communicating Fire Areas		Typical Detail	Penetrating Items	Comment/Disposition:
	Side 1	Side 2			
P631S0120	F-7	F-4	E-2A	Conduits: (1) 1½" Cond. (1) 3" Cond.	9" Silicone Foam with top cap and two separate bottom side damming boards. Vertical ceramic fiber damming board positioned on both sides separating seal from seismic gap design.
P641S0051	F-1	F-7	E-2A	Conduits: (1) 1½" Cond. (1) 3" Cond.	9" Silicone Foam with bottom side damming board. Vertical ceramic fiber damming board positioned on both sides separating seal from seismic gap design.
P641S0052	F-1	F-6	E-2A	Conduits: (1) 1½" Cond. (2) 2" Cond. (1) 3" Cond.	9" Silicone Foam with bottom side damming board. Vertical ceramic fiber damming board positioned on both sides separating seal from seismic gap design.

5.2 Evaluation of Condition

The penetrations identified in Table I have unique design conditions where floor block-outs are incorporated within the seismic expansion gap of the Fuel Building to Auxiliary building interface. These common penetration and seismic gap openings were sealed with a fire rated detail in accordance with M-663-00017. Ceramic fiberboard was vertically positioned on the sides of the blockout opening interface with the seismic gap in order to contain the Silicone Foam during seal installation. The existence of the added vertical ceramic fiberboard was confirmed during the seismic gap inspection and rework effort as discussed in Section 4.2. The vertically positioned ceramic fiberboard serves the following two significant functions:

- It prevents the Silicone Foam from spilling or expanding into the seismic gap air space between the topside ceramic fiber fill, and the bottom side backing rod and Dymeric Caulk.

- It separates the two designs (sealant materials) during fire exposure minimizing impact of performance characteristics (material char and/or consumption) from one another.

Placement of the vertical ceramic fiberboards along the sides of the opening provides a basis for an acceptable 3-hour fire rated configuration for both the penetration seal and seismic gap interfaces. The ceramic fiberboard is inert and does not change in physical characteristics when subjected to direct flame impingement. It will maintain the interface and sealant stability for both configurations during fire exposure. The primary seismic gap sealant (compressed ceramic fiber) tightly abuts the vertical ceramic fiberboard, thus establishing physical separation between both primary and secondary sealants that will minimize consumption of either penetration sealant (Silicone Foam) or seismic gap design (Dymeric compounds). Both these designs utilize fire resistant and compressible materials as the primary sealant and are both 3-hour fire rated. The addition of the vertical ceramic fiberboards between the seismic gap detail and the penetration seal material ensures that both designs will

perform independent of each other during fire exposure and plant environments such as building moments. Additionally, ceramic fiberboard (damming) is typically used at WCNOC for penetration seal damming and has been extensively tested as part of penetration seal assemblies in accordance with ASTM E119 time and temperature curves with consistent and acceptable results.

Based on the above discussions, it is reasonable to conclude that both seal designs remain bounded and the addition of the vertical damming board ensures that the interface will not experience any negative interactions during fire exposure or plant environments such as building moments. Therefore, the seismic gap and penetration seal interfaces with ceramic fiberboard are acceptable.

5.3 Post Fire Safe Shutdown Impact

There is no impact to PFSSD systems or components as a result of this evaluation. The penetration seal and seismic gap interfaces identified in Table I will perform their intended function for a 3-hour duration.

6.0 Conclusions

Based on the above discussions, it is reasonable to conclude that the Table I penetration seals are 3-hour F and T rated, which satisfies regulatory requirements and commitments, as well as WCNOC Fire Protection Program requirements to prevent spread of fire from one fire area to another.

Penetration Seal Data

Appendix: B11

Penetration #: P621S0179

Penetration Type: E-2A **Fire Area (Side 1):** F-4 **Fire Area (Side 2):** F-2

Loc./Elev.: 2025'-0" **M-0X Dwg:** M-0X6211

1. **Barrier Thickness:** 10"
2. **Opening Size:** 12"X3'-0"
3. **Penetrants:** (4) ER
4. **Sealant Type:** Foam
5. **Damming Side1:** Top Cap/Flush
6. **Damming Side 2:** Not Attached
7. **Damming Continuity (Acc/Rej):** Accept
8. **Boot Condition (Acc/Rej):** N/A
9. **Sealant Depth:** 9"
10. **Annular Gap (smallest):** 2"
11. **Gap between pen:** 2"
12. **Barrier Type:** F W
13. **Opening Sleeved or Concrete:** Concrete *
14. **Pipe Insulated:** N/A

Wayne Aregood
Prepared By:

Jeff Suter
Reviewed By:

Walkdown Comments:

* Seismic Gap Detail interface. Changed QTY of penetrants from "(3) ER" to "(4) ER". There are two individual bottom side damming boards installed, one is friction fitted within the opening and the other is seen in the bottom side photo. This was confirmed during the Seismic Gap destructive examination effort.

Sketch:

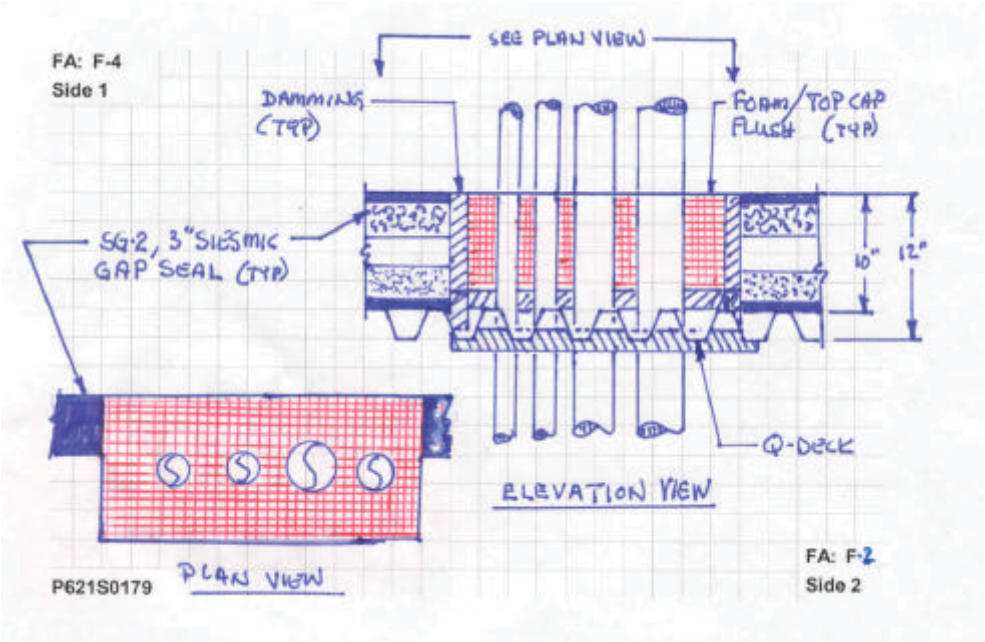

Penetration Seal Data

Appendix: B11

Photos: P621S0179

Fire Area F-4 (Side 1)

Fire Area F-4 (Side 1)

Fire Area F-2 (Side 2)

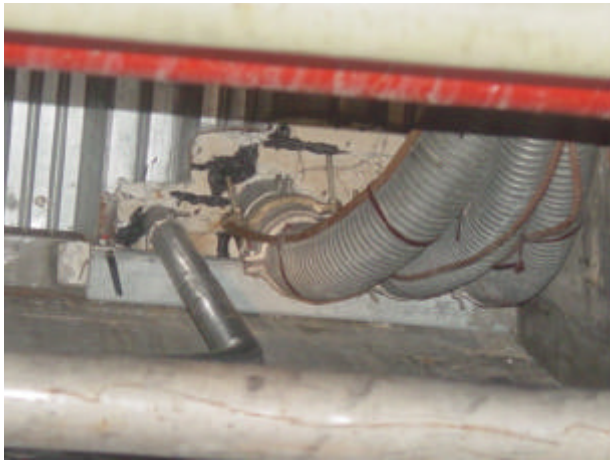

Fire Area F-2 (Side 2)

Penetration Seal Data

Appendix: B11

Penetration #: P621S0180

Penetration Type: M-6A **Fire Area (Side 1):** F-4 **Fire Area (Side 2):** F-3

Loc./Elev.: 2025'-0" **M-0X Dwg:** M-0X6211

1. **Barrier Thickness:** 10"
2. **Opening Size:** 12"X3'-0"
3. **Penetrants:** SPARE
4. **Sealant Type:** Foam
5. **Damming Side1:** Top Cap Flush
6. **Damming Side 2:** * Flush w/Q-Deck Valley
7. **Damming Continuity (Acc/Rej):** Accept
8. **Boot Condition (Acc/Rej):** N/A
9. **Sealant Depth:** 9"
10. **Annular Gap (smallest):** N/A
11. **Gap between pen:** N/A
12. **Barrier Type:** F W
13. **Opening Sleeved or Concrete:** Concrete *
14. **Pipe Insulated:** N/A

Wayne Aregood
Prepared By:

Jeff Suter
Reviewed By:

Walkdown Comments:

* Seismic Gap Detail interface. There are two individual bottom side damming installed, one is friction fitted within the opening and the other is seen in the bottom side photo. This was confirmed during the Seismic Gap destructive examination effort.

Sketch:

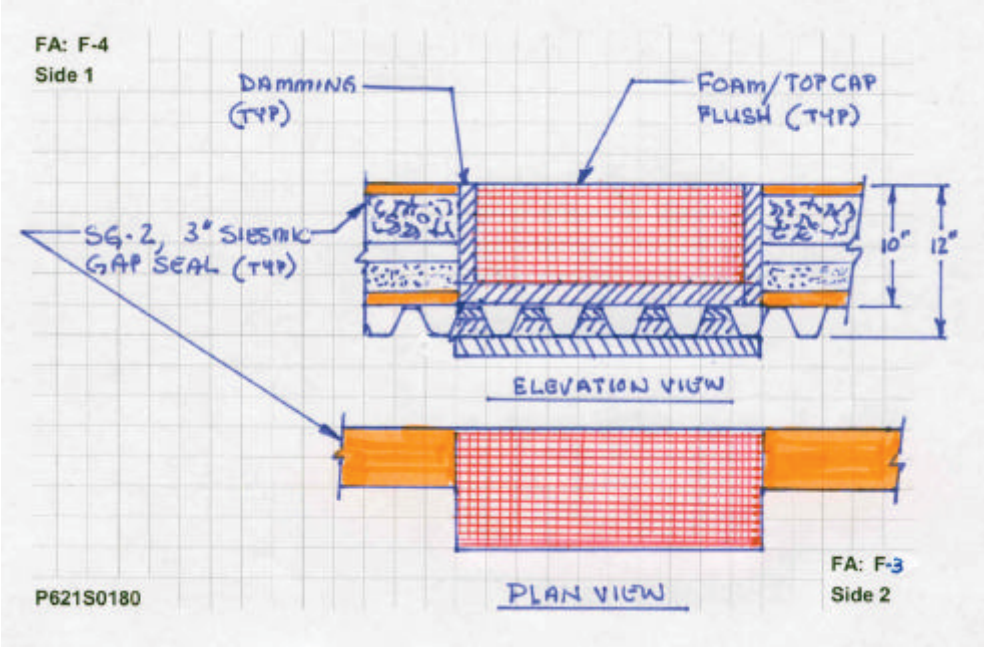

Penetration Seal Data

Appendix: B11

Photos: P621S0180

Fire Area F-4 (Side 1)

Fire Area F-4 (Side 1)

Fire Area F-3 (Side 2)

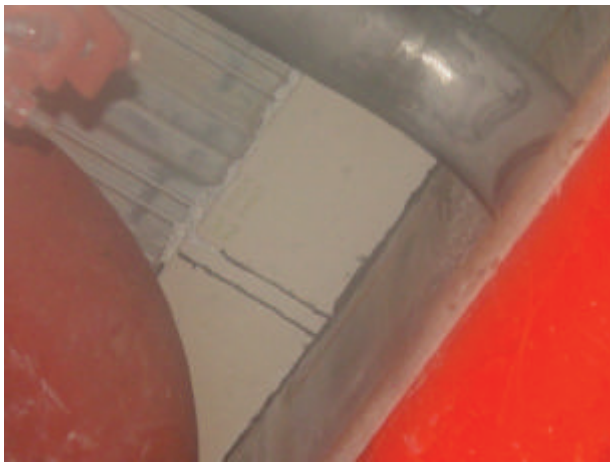

Fire Area F-3 (Side 2)

Penetration Seal Data

Appendix: B11

Penetration #: P631S0119

Penetration Type: E-2A **Fire Area (Side 1):** F-7 **Fire Area (Side 2):** F-4

Loc./Elev.: 2046'-6" **M-0X Dwg:** M-1X6311

1. **Barrier Thickness:** 10"
2. **Opening Size:** 12"X 2'-6"
3. **Penetrants:** (4)ER
4. **Sealant Type:** Foam
5. **Damming Side1:** Foam w/Top cap flush
6. **Damming Side 2:** * Flush w/Q-Deck
7. **Damming Continuity (Acc/Rej):** Accept
8. **Boot Condition (Acc/Rej):** N/A
9. **Sealant Depth:** 9"
10. **Annular Gap (smallest):** 2"
11. **Gap between pen:** 1-1/2"
12. **Barrier Type:** F
13. **Opening Sleeved or Concrete:** * Concrete
14. **Pipe Insulated:** N/A

Wayne Aregood
Prepared By:

Jeff Suter
Reviewed By:

Walkdown Comments:

* Seismic Gap Detail interface. There are two individual bottom side damming installed, one is friction fitted within the opening and the other is seen in the bottom side photo. This was confirmed during the Seismic Gap destructive examination effort.

Sketch:

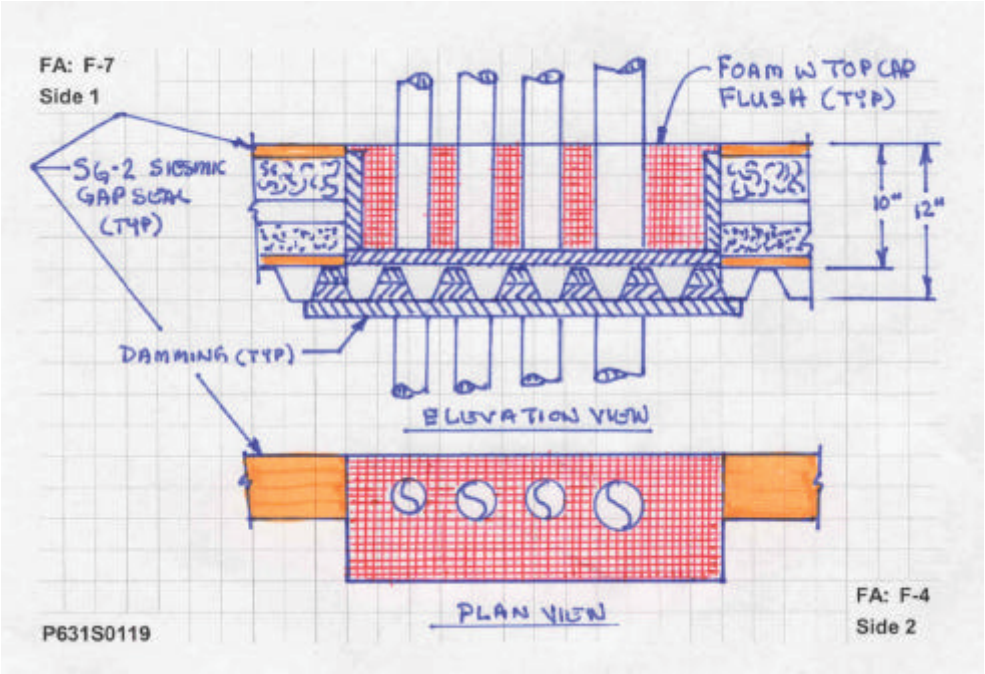

Penetration Seal Data

Appendix: B11

Photos: P631S0119

Fire Area F-7 (Side 1)

Fire Area F-7 (Side 1)

Fire Area F-4 (Side 2)

Fire Area F-4 (Side 2)

Penetration Seal Data

Appendix: B11

Penetration #: P631S0120

Penetration Type: E-2A **Fire Area (Side 1):** F-7 **Fire Area (Side 2):** F-4

Loc./Elev.: 2046'-6" **M-0X Dwg:** M-1X6311

1. **Barrier Thickness:** 10"
2. **Opening Size:** 12"X2'-0"
3. **Penetrants:** (2)ER
4. **Sealant Type:** Foam
5. **Damming Side1:** Foam w/Top cap flush
6. **Damming Side 2:** * Flush w/Q-Deck
7. **Damming Continuity (Acc/Rej):** Accept
8. **Boot Condition (Acc/Rej):** N/A
9. **Sealant Depth:** 9"
10. **Annular Gap (smallest):** 3"
11. **Gap between pen:** 3"
12. **Barrier Type:** F
13. **Opening Sleeved or Concrete:** *Concrete
14. **Pipe Insulated:** N/A

Wayne Aregood
Prepared By:

Jeff Suter
Reviewed By:

Walkdown Comments:

* Seismic Gap Detail interface. There are two individual bottom side damming installed, one is friction fitted within the opening and the other is seen in the bottom side photo. This was confirmed during the Seismic Gap destructive examination effort.

Sketch:

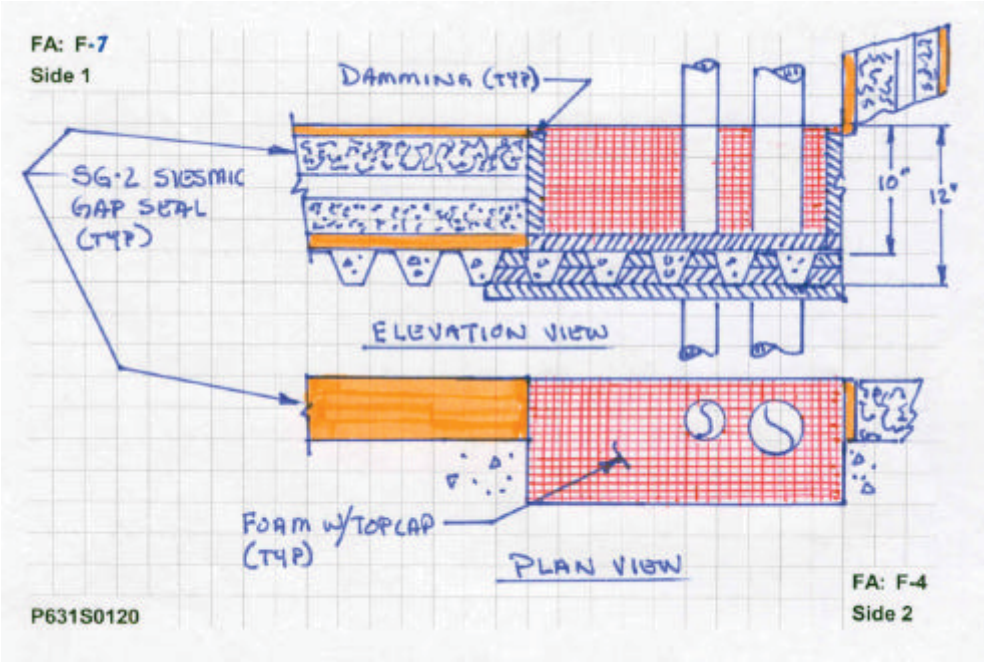

Penetration Seal Data

Appendix: B11

Photos: P631S0120

Fire Area F-7 (Side 1)

Fire Area F-7 (Side 1)

Fire Area F-4 (Side 2)

Fire Area F-4 (Side 2)

Penetration Seal Data

Appendix: B11

Penetration #: P641S0051

Penetration Type: E-2A **Fire Area (Side 1):** F-1 **Fire Area (Side 2):** F-7

Loc./Elev.: 2064'-0" **M-0X Dwg:** M-0X6411

1. **Barrier Thickness:** 10"
2. **Opening Size:** 10-5/8"X3'-6"
3. **Penetrants:** (2)ER
4. **Sealant Type:** Foam
5. **Damming Side1:** Foam flush w/Slab
6. **Damming Side 2:** Flush w/Q-Deck Valley
7. **Damming Continuity (Acc/Rej):** Accept
8. **Boot Condition (Acc/Rej):** N/A
9. **Sealant Depth:** 9"
10. **Annular Gap (smallest):** 3"
11. **Gap between pen:** 15"
12. **Barrier Type:** F
13. **Opening Sleeved or Concrete:** Concrete
14. **Pipe Insulated:** N/A

Wayne Aregood
Prepared By:

Jeff Suter
Reviewed By:

Walkdown Comments:

* Seismic Gap Detail interface. There are two individual bottom side damming installed, one is friction fitted within the opening and the other is seen in the bottom side photo. This was confirmed during the Seismic Gap destructive examination effort.

Sketch:

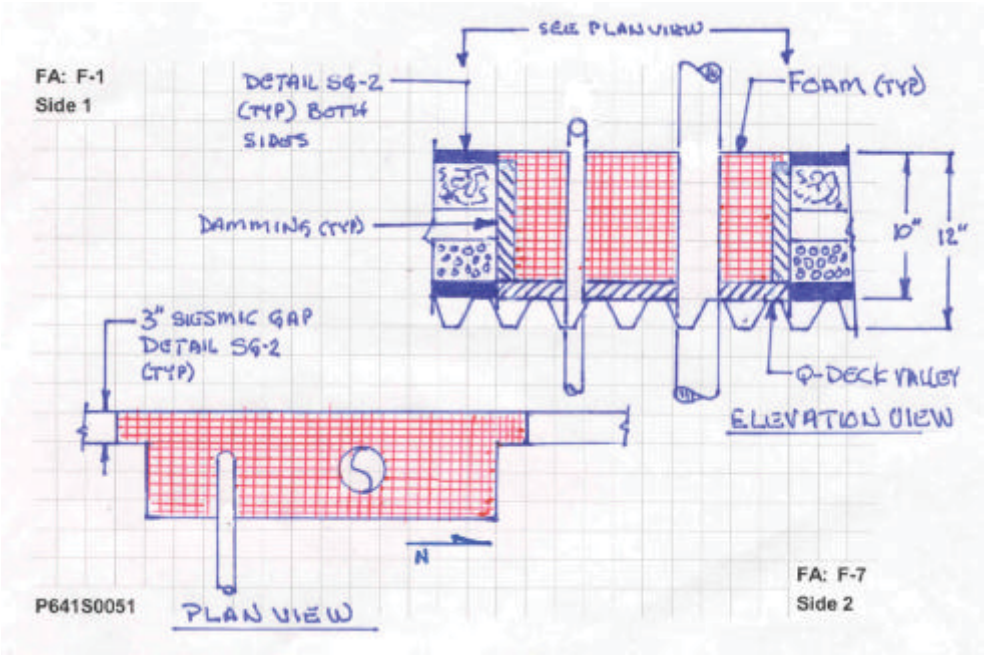

Penetration Seal Data

Appendix: B11

Photos: P641S0051

Fire Area F-1 (Side 1)

Fire Area F-1 (Side 1)

Fire Area F-7 (Side 2)

Fire Area F-7 (Side 2)

Penetration Seal Data

Appendix: B11

Penetration #: P641S0052

Penetration Type: E-2A **Fire Area (Side 1):** F-1 **Fire Area (Side 2):** F-6

Loc./Elev.: 2064'-0" **M-0X Dwg:** M-0X6411

1. **Barrier Thickness:** 10"
2. **Opening Size:** 12"X3'-0"
3. **Penetrants:** (4)ER
4. **Sealant Type:** Foam
5. **Damming Side1:** Foam Flush w/slab
6. **Damming Side 2:** Foam Flush w/Q-Deck Valley
7. **Damming Continuity (Acc/Rej):** Accept
8. **Boot Condition (Acc/Rej):** N/A
9. **Sealant Depth:** 9"
10. **Annular Gap (smallest):** 4"
11. **Gap between pen:** 2"
12. **Barrier Type:** F
13. **Opening Sleeved or Concrete:** Concrete
14. **Pipe Insulated:** N/A

Wayne Aregood
Prepared By:

Jeff Suter
Reviewed By:

Walkdown Comments:

* Seismic Gap Detail interface. There are two individual bottom side damming installed, one is friction fitted within the opening and the other is seen in the bottom side photo. This was confirmed during the Seismic Gap destructive examination effort.

Sketch:

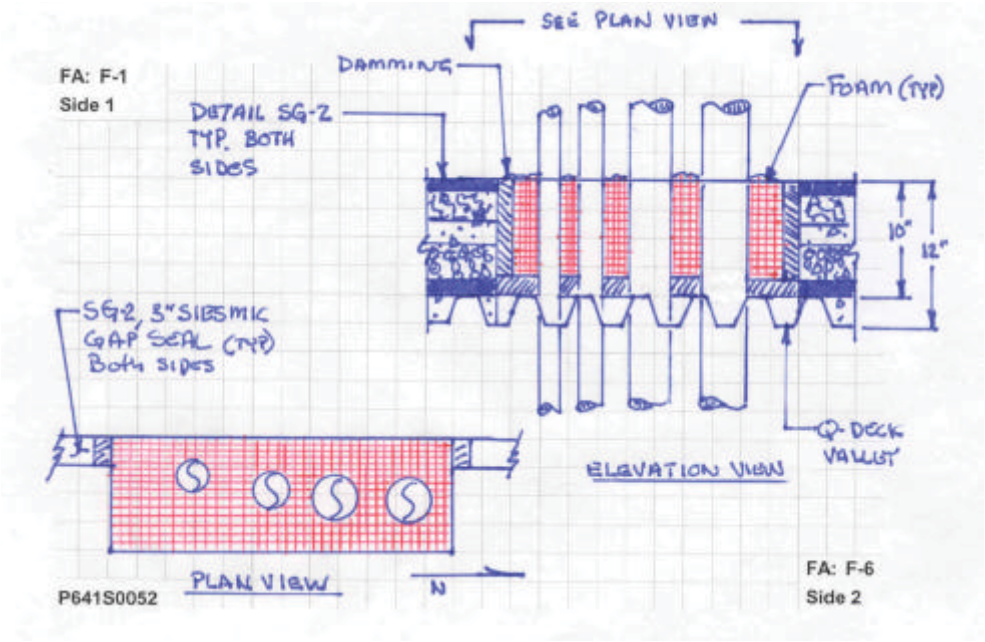

Penetration Seal Data

Appendix: B11

Photos: P641S0052

Fire Area F-1 (Side 1)

Fire Area F-1 (Side 1)

Fire Area F-6 (Side 2)

Fire Area F-6 (Side 2)

WOLF CREEK
NUCLEAR OPERATING CORPORATION

M-663-00017A

Attachment B12

Fire Protection Evaluation For Penetration Openings Crediting Calcium Silica and Fiberglass Piping Insulation

Rev. No.	Prepared By	Date	Reviewed By	Date
W01	Wayne S Aregood	08/20/05	Jeff Suter	08/20/05

Table of Contents

Revision Log 3

1.0 Purpose..... 4

2.0 Scope 4

3.0 References..... 4

4.0 Evaluation 5

5.0 Conclusions..... 11

Appendix B12, Penetration Seal Data ……..…. (24 Total Pages)

Revision Log

Revision	Reason for Revision
W01	Original Issue

1.0 Purpose

1.1 The purpose of this document is to evaluate existing penetration seals that are not directly bounded to the typical detail limitations established in M-663-00017. This evaluation was conducted in effort to satisfy regulatory expectation regarding qualification and documentation of fire barrier penetration seals, as discussed in NRC Information Notice 88-04. This evaluation was conducted in accordance with the guidance of NRC Generic Letter 86-10.

2.0 Scope

2.1 The Table I and II Penetration Seals in relation to the design requirements discussed in Section 5.1.

2.2 Refer to Section 7.0 of M-663-00017A for a cross-reference list of penetrations within Table I and II that are evaluated for additional seal parameters that do not satisfy the typical detail limitations of M-663-00017. In these instances, the potential cumulative affects of multiple unbounded attributes were considered for each penetration of concern.

3.0 References

3.1 NRC Generic Letter 86-10, Implementation of Fire Protection Requirements, dated April 24, 1986

3.2 NRC Information Notice 88-04, Inadequate Qualification and Documentation of Fire Barrier Penetration Seals

3.3 10 CFR 50 Appendix R, Fire Protection Program For Nuclear Power Facilities Operating Prior To January 1, 1979

3.4 LER 87-10, Technical Specification Violations – Inoperable Fire Barriers Caused By Personnel Errors

3.5 M-663-00017, Penetration Seal Typical Details, Rev. W20

3.6 M-663-00111, Promatec Penetration Closure Heat Transfer Report, Rev. 3

3.7 CTP-1001, (M-663-00082) Fire Qualification Test on Silicone Foam Floor Penetration Seals, Rev. W01

3.8 AP 10-102, Control Of Combustible Materials, Rev. 9

3.9 AP 10-104, Breach Authorization, Rev. 19

3.10 Bruin Plastics Company Inc., Material Safety Data Sheet for VRP 1862 9X12, Yellow Standard Herculite Vinyl Laminated Fabric or Vinyl Coated Mesh Polyester Scrim

3.11 M-162C, Specification for Non-metallic Thermal Insulation for Piping and Equipment Located In Auxiliary Building, Control Building, Diesel Generator Building, Fuel Building, and Radwaste Building For The Wolf Creek Generating Station, Rev. 19

3.12 DDCN M-162C-19-10, Subject: Pipe Insulation Control to Ensure Penetration Seal Fire Resistance Rating Maintained

4.0 Assumptions

4.1 It is assumed that existing penetration seal materials have been installed as required by applicable typical design details and procedures. This is an acceptable assumption based on a review of the Quality Control documentation maintained during initial penetration seal installation activities and the intrusive inspections conducted to address LER 87-10, regarding seal material depth.

5.0 Evaluation

5.1 Assessment of Condition to Design Requirements

Initial typical detail assignment for the penetrations identified in Tables I and II resulted in a condition where at least one M663-00017 typical detail critical parameter was not satisfied for each penetration seal. In these cases, the nonconforming parameter was penetrant size. Due to the lack of industry testing, penetration seals identified in Tables I and II require further evaluation to determine actual fire rating and to document the basis for that assigned rating. Refer to Appendix B12 for relevant penetration seal data.

TABLE I

Radflex Penetrations Crediting Insulation

Penetration Number	Communicating Fire Areas		Typical Detail	Barrier Thickness (Inches)	Sealant Depth	Comments/Disposition
	Side 1	Side 2				
P133S0799: with a single 12” pipe penetrant	A-25	A-1	RB-1	12”	Assumed Per Detail	1½” thick (X) Calcium Silica Pipe Insulation provides additional protection from direct flame impingement and provides basis for “F” Rating. (Ref. M-162C, D-8)
P134S0860: with a single 12” pipe penetrant	A-24	A-1	RB-1	12”	Assumed Per Detail	2” thick (X) Calcium Silica Pipe Insulation provides additional protection from direct flame impingement and provides basis for “F” Rating. (Ref. M-162C, D-8)

TABLE II
Silicone RTV Foam Penetrations Crediting Insulation

Penetration Number	Communicating Fire Areas		Typical Detail	Barrier Thickness (Inches)	Sealant Depth	Comments/Disposition
	Side 1	Side 2				
P114W0423: with a single 8" pipe penetrant	A-1	A-6	M-1	12"	Assumed Per Detail	1½" thick (AS) Fiberglass Pipe Insulation provides additional protection from direct flame impingement on both sides of the barrier and provides basis for "F" Rating. (M-162C, D-19c)
P125W2432: with a single 8" pipe penetrant	A-1	A-33	M-1	24"	Assumed Per Detail	1½" thick (AS) Fiberglass Pipe Insulation provides additional protection from direct flame impingement on the A-1 side of the barrier and provides basis for "F" Rating. (M-162C, D-19j)
P125W2434: with a single 8" pipe penetrant	A-6	A-33	M-1	24"	Assumed Per Detail	1½" thick (AS) Fiberglass Pipe Insulation provides additional protection from direct flame impingement on the A-6 side of the barrier and provides basis for "F" Rating. (M-162C, D-19c)
P132S0683: with a single 24" pipe penetrant	A-8	A-1	M-6A	10"	11"	1½" thick (AS) Fiberglass Pipe Insulation provides additional protection from direct flame impingement on both sides of the barrier and provides basis for "F" Rating. (M-162C, D-19j)
P132S0684: with a single 24" pipe penetrant	A-8	A-1	M-1	10"	Assumed Per Detail	1½" thick (AS) Fiberglass Pipe Insulation provides additional protection from direct flame impingement on both sides of the barrier and provides basis for "F" Rating. (M-162C, D-19f)
P132W1433: with a single 8" pipe penetrant	A-8	CC-1	M-1	24"	Assumed Per Detail	1½" thick (X) Calcium Silica Pipe Insulation provides additional protection from direct flame impingement on both sides of the barrier and provides basis for "F" Rating. (Ref. M-162C, D-17)

5.2 Evaluation of Condition

5.2.1 Radflex Penetrations (Table I)

Radflex seal designs with pipe penetrants greater than 2" have not been specifically fire tested in accordance with ASTM E-119. M-663-00017, RB-1 Detail evaluated penetrant size and concluded that 10" pipe penetrant with or without pipe insulation is 3-hour fire (F) and temperature (T) rated. This determination was based on the comparison of Radflex material performance to Silicone RTV Foam, with a resulting conclusion that that Radflex is superior to Silicone RTV Foam when subjected to fire exposure. It is important to note that this evaluated conclusion was based on bare pipe exposure, which is considered more severe than pipe protected with Calcium Silica type insulation.

Table I penetration seals have a single 12" pipe penetrant that is slightly larger than that evaluated in M-663-00017, Detail RB-1. Therefore, further review is required to assess acceptability.

Field inspection and review of the penetrations identified in Table I revealed that each penetration seal incorporates Calcium Silica pipe insulation.

The Calcium Silica piping insulation was initially installed due to high system temperatures and the potential to degrade the sealant material after prolonged system temperature exposures. It is concluded that F rating requirements can be satisfied if the Calcium Silica pipe insulation is credited for providing added protection from the effects of conductive and radiant thermal propagation to the unexposed side of the barrier.

Pipe penetrants that utilize Calcium Silica are continuously protected through and on both sides of the barrier, thus significantly reducing thermal insult during fire exposure to the installed penetrants. M-663-00111 demonstrated that insulating pipe penetrants through the seal material would significantly reduce thermal exposure to the seal material, thus preserving seal characteristics for prolong system temperature exposures. This report documented a significant drop in interface temperatures as a result of installed piping insulation. The actual drop varies depending on postulated system temperatures and insulation thickness, but in all cases the reported temperature drop is significant.

This thermal benefit logic can be applied to fire exposure when considering that the pipe penetrants being evaluated are only slightly larger than that previously evaluated in M-663-00017, Detail RB-1. Furthermore, Calcium Silica type insulation is not consumed during fire exposure, as demonstrated in fire test CTP-1001, Penetration 5.1. This fire test contained a 4" pipe penetrant that was insulated with 1" thick Calcium Silica through a 6" Silicone RTV Foam seal with 1" bottom side damming. Considering that Silicone RTV Foam has a greater char rate, it is consumed more rapidly than Radflex. Therefore, direct flame

impingement to the test article would be more severe than that expected for the Table I pipe penetrations sealed with Radflex (RB-1). This coupled with the fact that the Radflex penetration seal designs have greater sealant depths and insulation thickness, the slightly larger pipe sizes than that qualified in M-663-00017, Detail RB-1 are considered inconsequential. Based on these constructive attributes, it is reasonable to conclude that the penetration seals identified in Table I would resist the affects of fire exposure and prevent the passage of flame to unexposed side of the barrier for a 3-hour duration. Therefore, Table I penetration seals are considered 3-hour F rated.

Due to the larger pipe sizes, Table I penetration seals are not qualified for a 3-hour T rating. In effort to evaluate fire area impact, field walkdowns and comprehensive assessment reviews, documented in Appendix B12-1, were conducted for each penetration of concern. This review was completed in accordance with the criteria and review methodology established in M-663-00017A Section 7.2.3 for non-T rated penetrations. The review identified that no exposed insitu combustibles or PFSSD circuits are located within the Heat Affected Zone (HAZ) for penetration P133S0799. Therefore, the penetration satisfies the review criteria of M-663-00017 where T rating requirements are not met.

P134S0860 has radiation shielding directly affixed to the insulation within the HAZ to provide added protection from radiological exposure. This shielding has combustible components and further assessment is required to ensure that a fire in Fire Area A-1 would not transmit sufficient conductive or radiant heat to ignite the shielding in Fire Area A-24.

Section 7.2.3 and Table 7.2.3-1 of M-663-00017A has compared pipe sizes and unexposed side penetrant exposure temperatures. The comparison demonstrates that a 10" un-insulated pipe through a 12" Silicone RTV Foam seal will yield a temperature of 455°F on the unexposed side of the test slab (on the penetrant, 6" above the slab). As discussed above, the slightly larger pipe insulated with Calcium Silica type insulation will adequately compensate for the diameter differential. It is also apparent that an equal depth of Radflex verses Silicone RTV Foam is a superior seal configuration with regard to fire exposure performance. In addition, it is reasonable to conclude regarding penetrant temperature performance, that the presence of Calcium Silica insulation will also provide additional thermal margin to resist conductive and radiant energy propagation through the barrier to the radiation shielding affixed to the penetrant insulation. The unexposed side insulation is not directly exposed to the fire and will provide at least equivalent protection to that of the exposed side of the barrier, thus providing even more thermal margin than that indicated in Table 7.2.3-1.

The lead shielding is comprised of Standard "Herculite" (Polyvinyl Chloride [PVC] Nylon laminate) with a fibrous reinforcement weave to provide strength. The PVC/Nylon laminate material is the combustible element of the shielding, which has a 600°F auto-ignition temperature, as identified by the manufactures data (Bruin Plastics). Based on the above

discussions, it is reasonable to conclude that the auto-ignition temperature of the radiation shielding will not be reached resulting from a fire in Fire Area A-1. This conclusion is primarily based on the presence of the Calcium Silica insulation, through and on both sides of the barrier penetration seal and the fact that the installed Radflex will perform better than that of Foam, as evaluated in M-663-00017A. Therefore, the presence of radiation shielding within the HAZ of penetration seal P134S0860 is acceptable and its ability to prevent the passage of flame will not be impacted by the lack of T rating.

5.2.2 Silicone RTV Foam Penetrations (Table II)

The Table II penetration openings contain insulated pipe penetrants that are sealed with Silicone RTV Foam and Ceramic Fiber damming. Penetration P132W1433 is insulated with Calcium Silica through the seal and completely encompasses the barrier opening on both barrier sides. As discussed in Section 5.2.1 above, this insulation material has been demonstrated by industry testing to improve unexposed side penetration seal performance. The insulation provides protection of the seal from direct flame impingement and a reduction in thermal conduction though the penetrant. This protection ensures the 3-hour F rated performance of this seal.

The remaining Table II penetrations are insulated with fiberglass type insulation on at least one side of the barrier. The Fiberglass Anti-Sweat insulation appears to abut or stop at the penetration seal material and is primarily used for piping with less than 200°F system temperatures. As with Calcium Silica insulation, the Fiberglass Anti-Sweat insulation also provides protection from direct flame impingement and it is reasonable to conclude that substantial benefit is achieved by crediting this non-combustible insulation type material. For the purpose of this evaluation, one sided insulation protection is the more severe and bounds two sided insulation protection.

Pipe penetrants that utilize Fiberglass Anti-Sweat type insulation (AS) provide added shielding from direct flame impingement resulting lower temperature exposure to the penetrant, thus lowering heat transmission to the unexposed barrier side of the barrier. Although, not specifically tested to ASTM E119 requirements, fiberglass type insulation is non-combustible and is not readily consumed during fire exposures. The fiberglass element of the insulation is anticipated to remain intact for a 3-hour fire duration. Specific temperature performance is not a critical attribute for this insulation type because it does not transition through the barrier/seal opening nor does it contribute to the physical barrier separating fire areas.

The pipe insulation is a molded, heavy density, one-piece insulation made from inorganic glass fibers bonded with a thermosetting resin. The insulation is produced in three-foot lengths either with or without a jacket and is typically installed, cut to length, as needed. The jacket is a white-Kraft paper bonded to aluminum foil (jacket) and reinforced with fiberglass

fibers. This vapor seal material and the adhesive used to bond the vapor seal to the jacketing has been determined combustible and is evaluated herein.

The vapor barrier and associated adhesive amounts have been determined to be an insignificant quantity of Class "A" combustible that is located on the inner surface of the jacketing. When tested in accordance with ASTM E-84, NFPA 255 and UL 723 as plain insulation or on a composite basis (insulation, jacket and adhesive), the pipe insulation does not exceed:

- 25 Flame spread
- 50 fuel contribution
- 50 smoke development

Because the vapor seal and associated adhesive contribute an insignificant quantity of combustible and the fiberglass insulation element would not be consumed during fire exposure, it is reasonable to conclude that the remaining fiberglass would provide thermal benefit to the penetrant on the unexposed side of the barrier.

Although, it can be expected that the insulation jacket, vapor barrier and adhesive would be consumed rapidly during an ASTM E119 fire on the exposed barrier side, the remaining fiberglass element of the composite insulation unit would not be dislodged due to the stainless steel banding used to secure the composite insulation unit to the pipe. It is important to understand that this insulation is regarded as an enhancement that will impede radiant energy from passing through the penetrant, damming and sealant to the unexposed side of the barrier. This additional protection (insulation) is credited to slow the char rate of the internal sealant material by impeding thermal propagation to the unexposed side of the barrier, thus yielding improved thermal performance on the unexposed side of the barrier. On the unexposed barrier side the vapor barrier and adhesive are protected from fire propagation by the compressive sheet metal outer jacket, which will not be physically affected on the cold side.

Based on the protective attributes provided by the Fiberglass Anti-Sweat pipe insulation, it is reasonable to conclude that the penetration seals identified in Table II would resist the affects of fire exposure and prevent the passage of flame to unexposed side of the barrier for a 3-hour duration. Therefore, Table II penetration seals are considered 3-hour F rated.

Due to the larger pipe sizes, Table II penetration seals are not qualified for a 3-hour T rating. In effort to evaluate fire area impact, field walk-downs and comprehensive assessment reviews, documented in Appendix B12-1, were conducted for each penetration of concern. This review was completed in accordance with the criteria and review methodology established in M-663-00017A Section 7.2.3 for non-T rated penetrations. The review identified that no exposed insitu combustibles or PFSSD circuits are located within the Heat Affected Zone. Therefore,

the Table II penetrations satisfy the review criteria of M-663-00017 where T rating requirements are not met.

Procedure AP 10-104 and Specification M-162C have been revised to provide insulation control for the Table I and II penetrations and associated pipe lines. This was necessary in order to identify the fire protection significance of the insulation and define the fire protection compensatory measures if insulation is removed.

5.3 Post Fire Safe Shutdown Impact

There is no impact to PFSSD systems or components as a result of this evaluation. The Table I and II penetration seals are evaluated as 3-hour F rated. The comprehensive walkdown review for each of these penetrations revealed that no exposed insitu combustibles or PFSSD circuits are negatively affected by the non-T rated penetrations.

A segment of insulated pipe directly above penetration P134S0860 is covered with radiation shielding that is directly affixed to the pipe insulation. This radiation shielding contains combustible PVC plastic material that is within AP 10-102 limitations. The above evaluation determined that the presence of the shielding does not to impact the seal's ability to maintain its intended design function. Therefore, PFSSD circuits are not negatively affected by the non-T rated penetrations.

6.0 Conclusions

Based on the above discussions, it is reasonable to conclude that the Table I and II penetration seals are acceptable as 3-hour F rated and will perform their intended design function, regardless of not achieving a T rating. In all cases, the installed piping insulation on either side of the barrier will improve radiant performance regardless of pipe sizes. By crediting the piping insulation radiant improvement (T) will be achieved by lowering thermal transmission through the barrier, thus improving the F rating performance of the penetration seals. The penetration seals satisfy regulatory requirements and commitments as well as WCNOC Fire Protection Program requirements, to prevent spread of fire from one fire area to another. It has also been determined through this evaluation that the lack of a T rating will not affect the plant's ability to achieve and maintain PFSSD.

Penetration Seal Data

Appendix: B12

Penetration #: P114W0423

Penetration Type: M-1 **Fire Area (Side 1):** A-1 **Fire Area (Side 2):** A-6

Loc./Elev.: 1986'-6" **M-0X Dwg:** M-1X0360

1. **Barrier Thickness:** 12" Nominal
2. **Opening Size:** 14"D
3. **Penetrants:** (1)8"P
4. **Sealant Type:** Assumed Per Detail
5. **Damming Side1:** Unknown
6. **Damming Side 2:** Unknown
7. **Damming Continuity (Acc/Rej):** Accept
8. **Boot Condition (Acc/Rej):** N/A
9. **Sealant Depth:** Assumed 6"
10. **Annular Gap (smallest):** Unknown
11. **Gap between pen:** N/A
12. **Barrier Type:** F
13. **Opening Sleeved or Concrete:** Steel
14. **Pipe Insulated:** Yes

Wayne Aregood
Prepared By:

Jeff Suter
Reviewed By:

Walkdown Comments:

QC documentation identifies that seal depth is 6". Insulation completely covering seal surfaces, seal specifics can not be verified (See Drawing M-13EF06; Essential Service Water [EF] Line Number 099-HBC-8", 95F Design Temp, 1-1/2" thick, Classification "AS" [Anti-Sweat] Fiberglass Type Insulation)

Sketch:

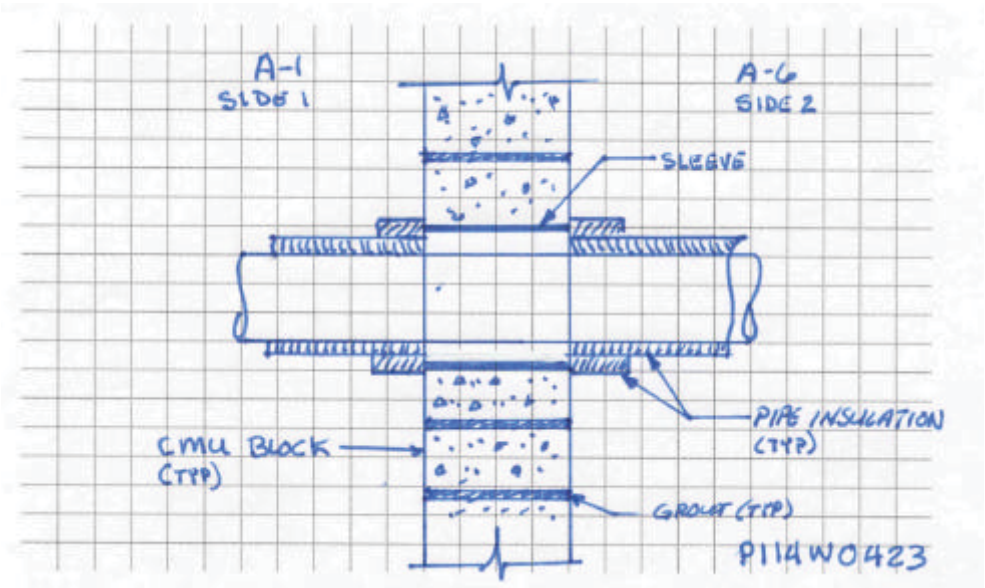

Penetration Seal Data

Appendix: B12

Photos: P114W0423

Fire Area A-1 (Side 1)

Fire Area A-1 (Side 1)

Fire Area A-6 (Side 2)

Fire Area A-6 (Side 2)

Penetration Seal Data

Appendix: B12

Heat Affected Zone Review: P114W0423

Fire Area (Side 1) A-1

1. 1-1/2" Conduit 5J1259, Not within Heat Affected Zone
2. 3.4" Conduit for emergency Light A-14, not within Heat Affected Zone

Fire Area (Side 2) A-6

1. 1-1/2" Conduit 5J1259, Not within Heat Affected Zone
2. 3.4" Conduit for emergency Light A-14, not within Heat Affected Zone

Review Distances

(Reference M-663-00017A, Figure 7.2.3-1)

8" Pipe			
L1 & L2 Dist. (ft)	Temp. (°F)	R1 Radius (in)	R2 Radius (in)
0.5	1677	4.4	5.8
1	1463	3.4	4.8
1.5	1277	2.6	3.9
2	1116	1.9	3.2
2.5	976	1.2	2.6
3	855	0.7	2
3.5	750	0.2	1.6
4	659	Contact	1.2
4.5	581		0.8
5	512		0.5
5.5	453		0.2
6	402		0
6.5	358		Contact

Side 1 Photo

No photo required.

Side 2 Photo

No photo required.

Sketch

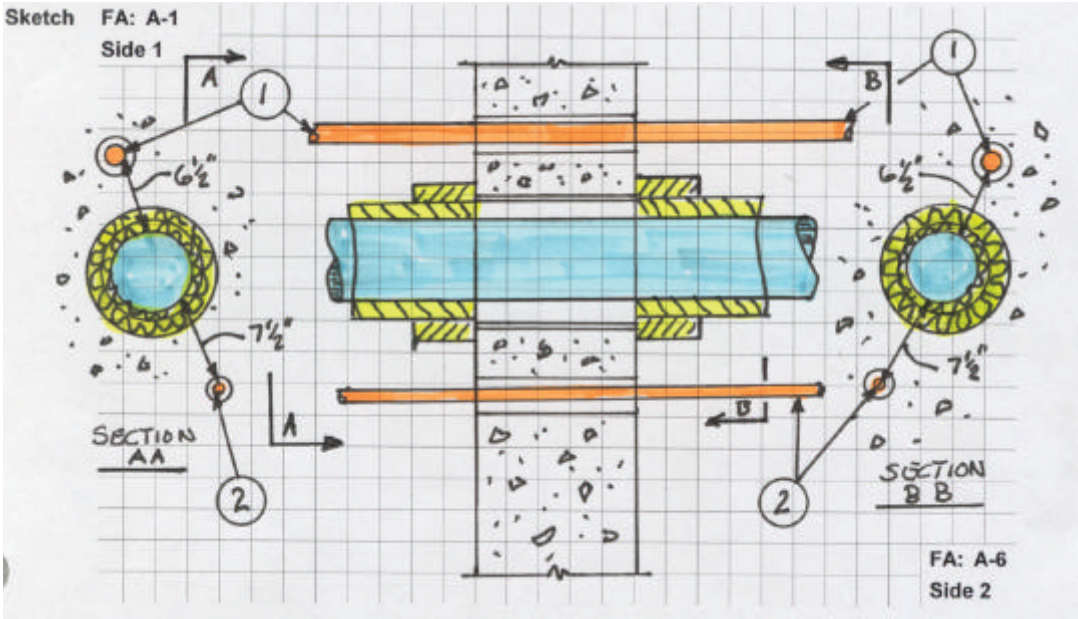

Penetration Seal Data

Appendix: B12

Penetration #: P125W2432

Penetration Type: M-1 **Fire Area (Side 1):** A-1 **Fire Area (Side 2):** A-33

Loc./Elev.: 1993'-6" **M-0X Dwg:** M-1X1932

1. **Barrier Thickness:** 24"
2. **Opening Size:** 14"D
3. **Penetrants:** (1)8"P
4. **Sealant Type:** Foam
5. **Damming Side1:** * Unknown
6. **Damming Side 2:** Flush
7. **Damming Continuity (Acc/Rej):** Accept
8. **Boot Condition (Acc/Rej):** N/A
9. **Sealant Depth:** * Assumed 6"
10. **Annular Gap (smallest):** 1"
11. **Gap between pen:** N/A
12. **Barrier Type:** A F W
13. **Opening Sleeved or Concrete:** Steel
14. **Pipe Insulated:** * No

Wayne Aregood
Prepared By:

Jeff Suter
Reviewed By:

Walkdown Comments:

Barrier thickness based on drawing C-1C1151. * Side 1 is completely covered w/insulation. * Side 2, pipe is not insulated, side 1 is insulated. QC documentation identifies that seal depth is 6".

Sketch:

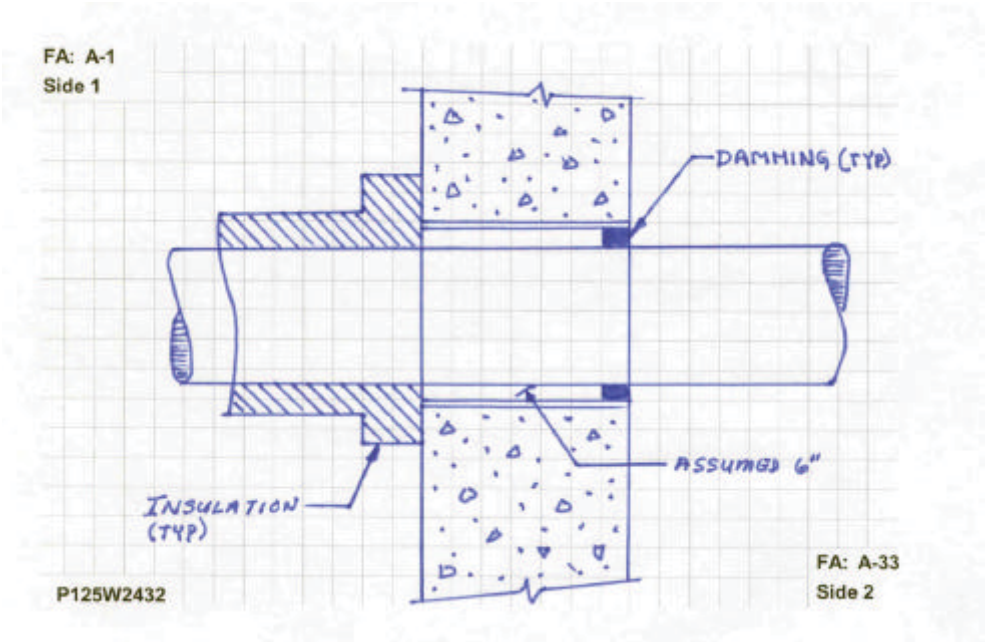

Penetration Seal Data

Appendix: B12

Photos: P125W2432

Fire Area A-1 (Side 1)

Fire Area A-1 (Side 1)

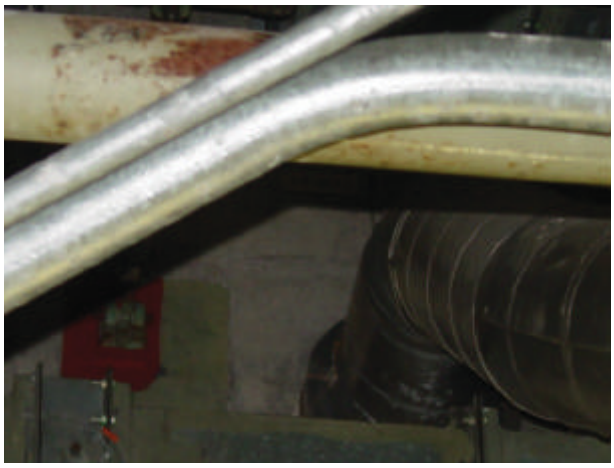

Fire Area A-33 (Side 2)

Fire Area A-33 (Side 2)

Penetration Seal Data

Appendix: B12

Heat Affected Zone Review: P125W2432

Fire Area (Side 1) A-1

1. No issues within Heat Affected Zone

Fire Area (Side 2) A-33

2. 1 1/2" conduit (not identified) within Heat Affected Zone. Conduit is Plant utility, 110 Volt, No Problem.

Review Distances

(Reference M-663-00017A, Figure 7.2.3-1)

8" Pipe			
L1 & L2 Dist. (ft)	Temp. (°F)	R1 Radius (in)	R2 Radius (in)
0.5	1677	4.4	5.8
1	1463	3.4	4.8
1.5	1277	2.6	3.9
2	1116	1.9	3.2
2.5	976	1.2	2.6
3	855	0.7	2
3.5	750	0.2	1.6
4	659	Contact	1.2
4.5	581		0.8
5	512		0.5
5.5	453		0.2
6	402		0
6.5	358		Contact

Side 1 Photo

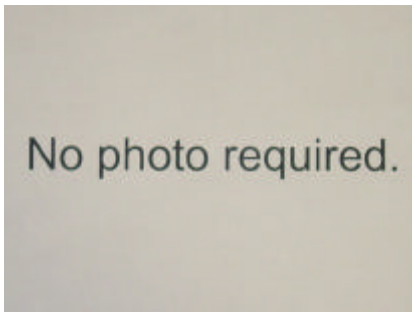

Side 2 Photo

Sketch

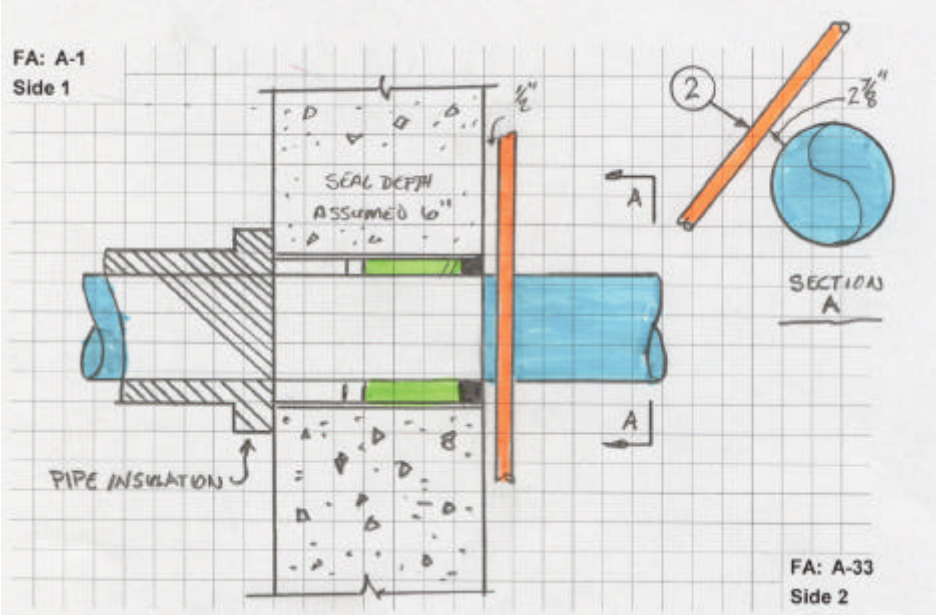

Penetration Seal Data

Appendix: B12

Penetration #: P125W2434

Penetration Type: M-1 **Fire Area (Side 1):** A-6 **Fire Area (Side 2):** A-33

Loc./Elev.: 1990'-1" **M-0X Dwg:** M-1X1932

1. **Barrier Thickness:** 24"
2. **Opening Size:** 14"D
3. **Penetrants:** (1)8"P
4. **Sealant Type:** Foam
5. **Damming Side1:** Flush
6. **Damming Side 2:** * Unknown
7. **Damming Continuity (Acc/Rej):** Accept
8. **Boot Condition (Acc/Rej):** N/A
9. **Sealant Depth:** * Assumed 6"
10. **Annular Gap (smallest):** 1/4"
11. **Gap between pen:** N/A
12. **Barrier Type:** A F W
13. **Opening Sleeved or Concrete:** Steel
14. **Pipe Insulated:** No*

Wayne Aregood
Prepared By:

Jeff Suter
Reviewed By:

Walkdown Comments:

Barrier thickness based on 1C-1151. * Side 1 is completely covered w/insulation. * Side 2, pipe is not insulated, side 1 is insulated. QC documentation identifies that seal depth is 6".

Sketch:

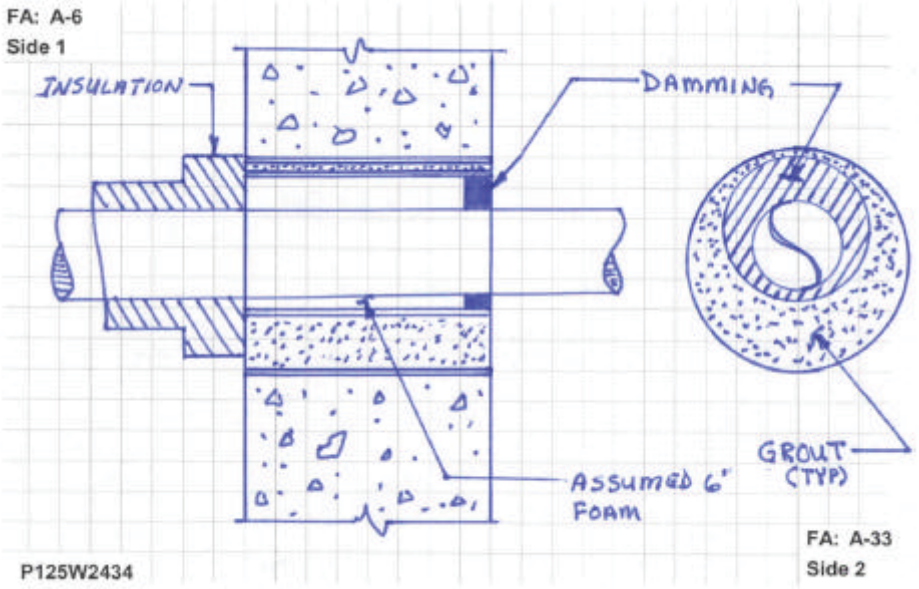

Penetration Seal Data

Appendix: B12

Photos: P125W2434

Fire Area A-6 (Side 1)

Fire Area A-6 (Side 1)

Fire Area A-33 (Side 2)

Fire Area A-33 (Side 2)

Penetration Seal Data

Appendix: B12

Heat Affected Zone Review: P125W2434

Fire Area (Side 1) A-6

1. No issues within Heat Affected Zone

Fire Area (Side 2) A-33

2. 6" Cable Tray 1B2F02, not within Heat Affected Zone

Review Distances

(Reference M-663-00017A, Figure 7.2.3-1)

8" Pipe			
L1 & L2 Dist. (ft)	Temp. (°F)	R1 Radius (in)	R2 Radius (in)
0.5	1677	4.4	5.8
1	1463	3.4	4.8
1.5	1277	2.6	3.9
2	1116	1.9	3.2
2.5	976	1.2	2.6
3	855	0.7	2
3.5	750	0.2	1.6
4	659	Contact	1.2
4.5	581		0.8
5	512		0.5
5.5	453		0.2
6	402		0
6.5	358		Contact

Side 1 Photo

No photo required.

Side 2 Photo

No photo required.

Sketch

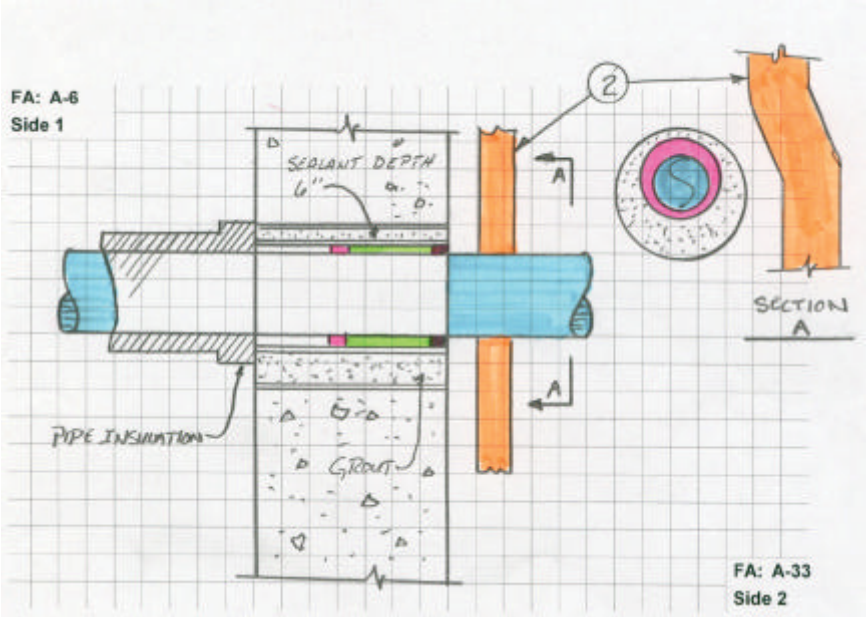

Penetration Seal Data

Appendix: B12

Penetration #: P132S0683

Penetration Type: M-6A **Fire Area (Side 1):** A-8 **Fire Area (Side 2):** A-1

Loc./Elev.: 2000'-0" **M-0X Dwg:** M-1X1321

1. **Barrier Thickness:** 10"
2. **Opening Size:** 30"D
3. **Penetrants:** (1)24"P
4. **Sealant Type:** Foam
5. **Damming Side1:** Assumed per detail
6. **Damming Side 2:** Recessed 4"
7. **Damming Continuity (Acc/Rej):** Accept
8. **Boot Condition (Acc/Rej):** N/A
9. **Sealant Depth:** 11" *
10. **Annular Gap (smallest):** 1"
11. **Gap between pen:** N/A
12. **Barrier Type:** F
13. **Opening Sleeved or Concrete:** Steel
14. **Pipe Insulated:** Yes

Jeff Suter
Prepared By:

Wayne Aregood
Reviewed By:

Walkdown Comments:

Top side seal is enclosed within support insulation. Insulation abuts damming board on bottom side. Slab thickness determined by Drawing C-1C1311 (wsa). * 11" foam depth based on installation QC documentation (WSA). (See Drawing M-13EF02; Essential Service Water Supply [EF] Line Number 076-HBC-24", 95F Design Temp, 1-1/2" thick, Classification "AS" [Anti-Sweat] Fiberglass Type Insulation)

Sketch:

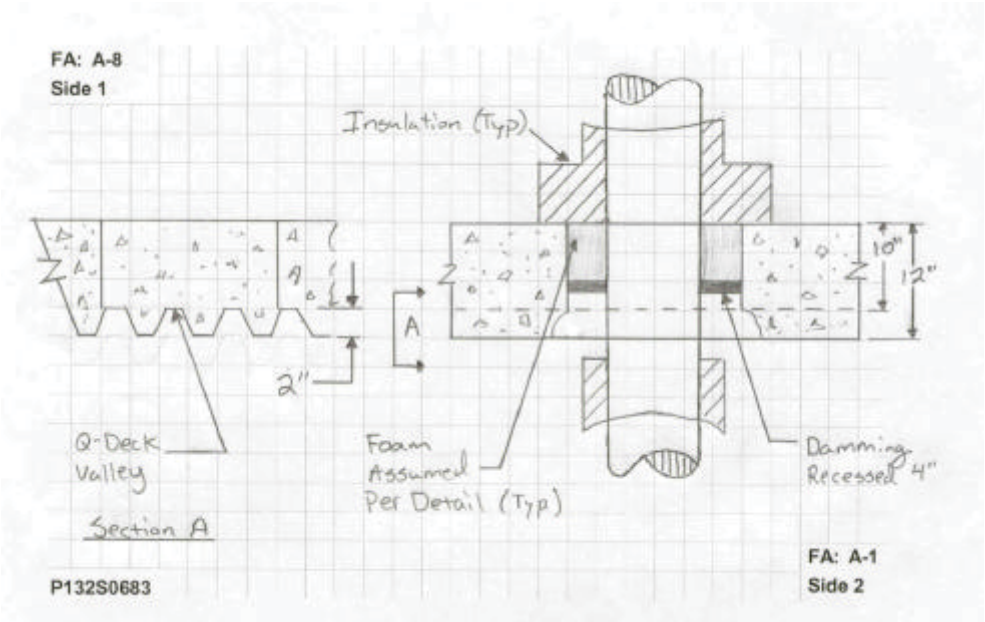

Penetration Seal Data

Appendix: B12

Photos: P132S0683

Fire Area A-8 (Side 1)

Fire Area A-8 (Side 1)

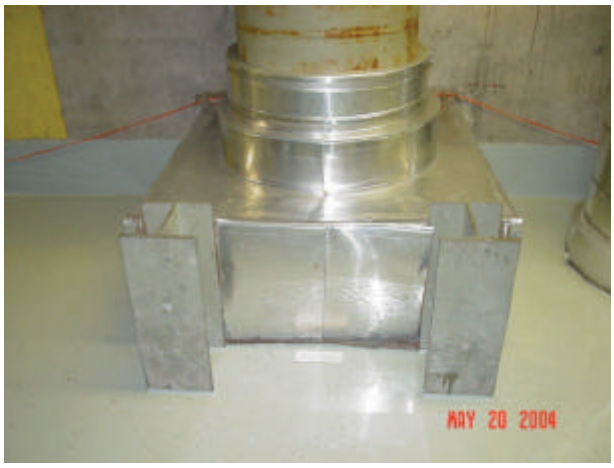

Fire Area A-1 (Side 2)

Fire Area A-1 (Side 2)

Penetration Seal Data

Appendix: B12

Heat Affected Zone Review: P132S0683

Fire Area (Side 1) A-8

No issues within Heat Affected Zone

Fire Area (Side 2) A-1

No issues within Heat Affected Zone

Review Distances

(Reference M-663-00017A, Figure 7.2.3-1)

24" Pipe			
L1 & L2 Dist. (ft)	Temp. (°F)	R1 Radius (in)	R2 Radius (in)
0.5	1763	4.8	6.1
1	1615	4.1	5.5
1.5	1480	3.5	4.9
2	1357	3	4.3
2.5	1244	2.5	3.8
3	1141	2	3.3
3.5	1048	1.6	2.9
4	962	1.2	2.5
4.5	884	0.8	2.2
5	813	0.5	1.9
5.5	748	0.2	1.6
6	689	Contact	1.3
6.5	635		1.1
7	585		0.8
7.5	540		0.6
8	499		0.4
8.5	462		0.3
9	427		0.1
9.5	396		Contact

Side 1 Photo

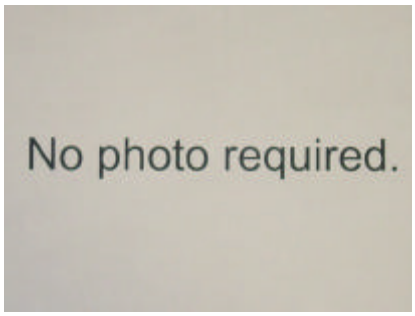

Side 2 Photo

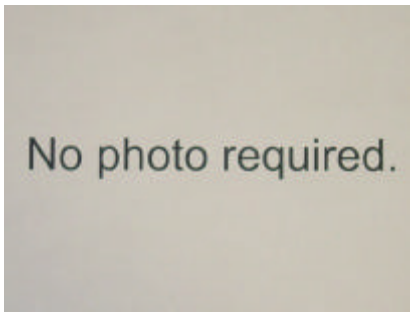

Sketch

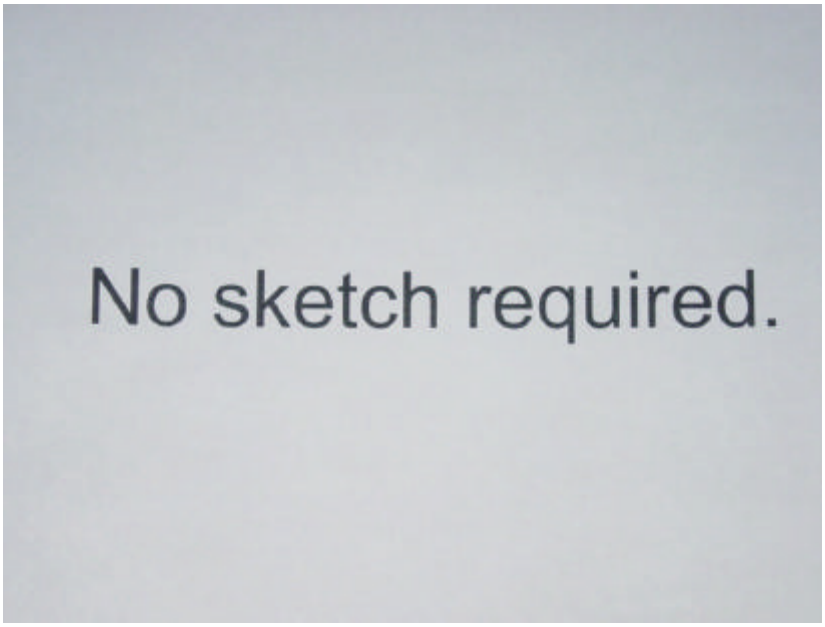

Penetration Seal Data

Appendix: B12

Penetration #: P132S0684

Penetration Type: M-1 **Fire Area (Side 1):** A-8 **Fire Area (Side 2):** A-1

Loc./Elev.: 2000'-0" **M-0X Dwg:** M-1X1321

1. **Barrier Thickness:** 10"
2. **Opening Size:** 30"D
3. **Penetrants:** (1)24"P
4. **Sealant Type:** Foam
5. **Damming Side1:** Assumed per detail
6. **Damming Side 2:** Assumed per detail
7. **Damming Continuity (Acc/Rej):** N/A
8. **Boot Condition (Acc/Rej):** N/A
9. **Sealant Depth:** Assumed per detail
10. **Annular Gap (smallest):** Indeterminant
11. **Gap between pen:** N/A
12. **Barrier Type:** F
13. **Opening Sleeved or Concrete:** Steel
14. **Pipe Insulated:** Yes

Jeff Suter
Prepared By:

Wayne Aregood
Reviewed By:

Walkdown Comments:

Insulation covers opening on both barrier sides. Slab thickness determined by Drawing C-1C1311 (wsa) (See Drawing M-13EF03; Essential Service Water Return [EF] Line Number 080-HBC-24", 110F Design Temp, 1-1/2" thick, Classification "AS" [Anti-Sweat] Fiberglass Type Insulation)

Sketch:

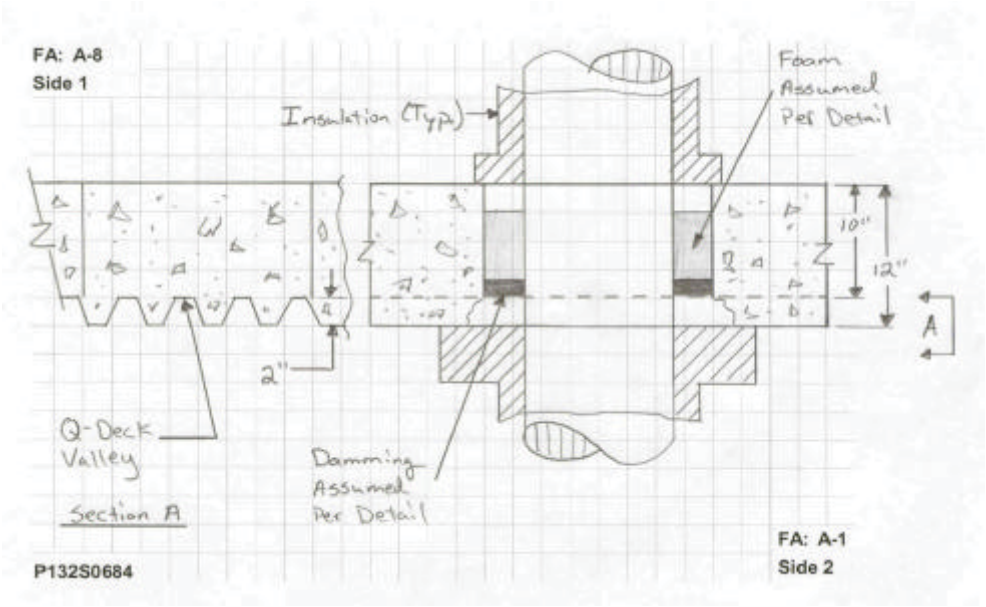

Penetration Seal Data

Appendix: B12

Photos: P132S0684

Fire Area A-8 (Side 1)

Fire Area A-8 (Side 1)

Fire Area A-1 (Side 2)

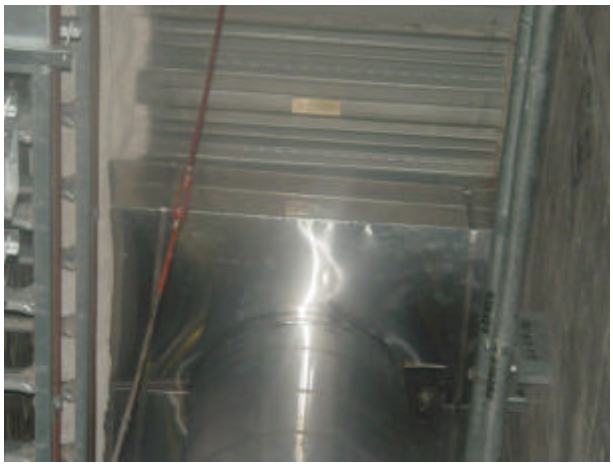

Fire Area A-1 (Side 2)

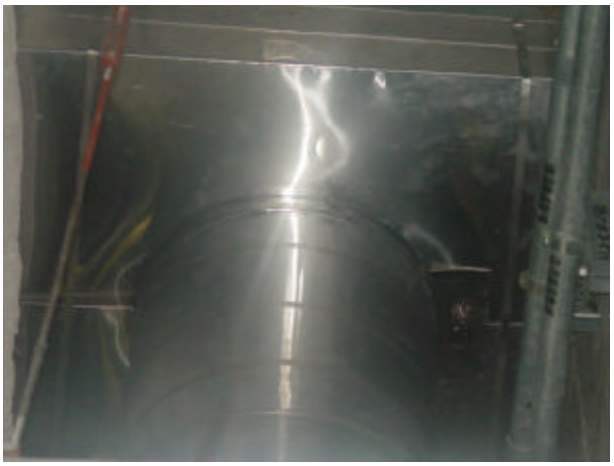

Penetration Seal Data

Appendix: B12

Heat Affected Zone Review: P132S0684

Fire Area (Side 1) A-8

No issues within Heat Affected Zone

Fire Area (Side 2) A-1

No issues within Heat Affected Zone

Review Distances

(Reference M-663-00017A, Figure 7.2.3-1)

24" Pipe			
L1 & L2 Dist. (ft)	Temp. (°F)	R1 Radius (in)	R2 Radius (in)
0.5	1763	4.8	6.1
1	1615	4.1	5.5
1.5	1480	3.5	4.9
2	1357	3	4.3
2.5	1244	2.5	3.8
3	1141	2	3.3
3.5	1048	1.6	2.9
4	962	1.2	2.5
4.5	884	0.8	2.2
5	813	0.5	1.9
5.5	748	0.2	1.6
6	689	Contact	1.3
6.5	635		1.1
7	585		0.8
7.5	540		0.6
8	499		0.4
8.5	462		0.3
9	427		0.1
9.5	396		Contact

Side 1 Photo

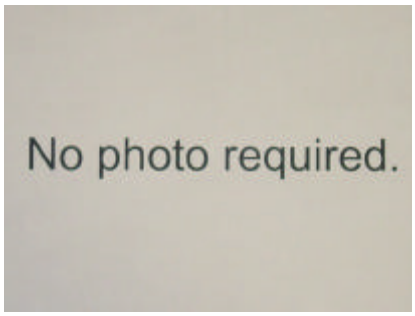

Side 2 Photo

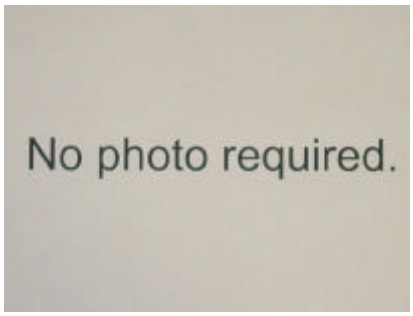

Sketch

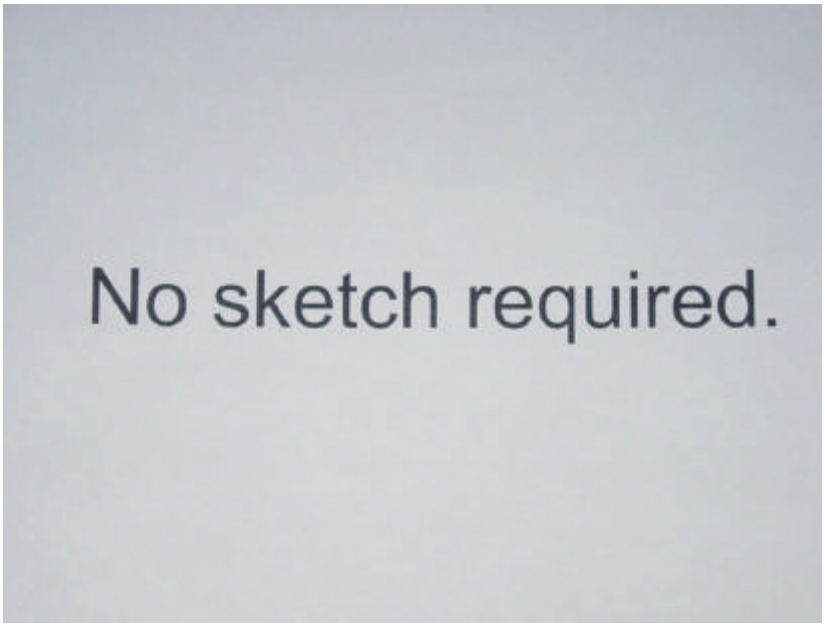

Penetration Seal Data

Appendix: B12

Penetration #: P132W1433

Penetration Type: M-1 **Fire Area (Side 1):** A-8 **Fire Area (Side 2):** CC-1

Loc./Elev.: 2013'-0 3 **M-0X Dwg:** M-1X1904

1. **Barrier Thickness:** 24"
2. **Opening Size:** 16"D
3. **Penetrants:** (1)8"P
4. **Sealant Type:** Foam
5. **Damming Side1:** Unknown
6. **Damming Side 2:** Unknown
7. **Damming Continuity (Acc/Rej):** Unknown
8. **Boot Condition (Acc/Rej):** N/A
9. **Sealant Depth:** Assumed Per Detail
10. **Annular Gap (smallest):** Unknown
11. **Gap between pen:** N/A
12. **Barrier Type:** A F
13. **Opening Sleeved or Concrete:** Steel
14. **Pipe Insulated:** Yes

Wayne Aregood
Prepared By:

Jeff Suter
Reviewed By:

Walkdown Comments:

QC documentation identifies a 6" seal depth. Insulation completely covers seal configuration. (WSA) (See Drawing M-13GB04; Central Chilled Water Supply [GB] Line Number 008-HBD-8", 44F Design Temp, 2" thick, Classification "X" Calcium Silica Type Insulation)

Sketch:

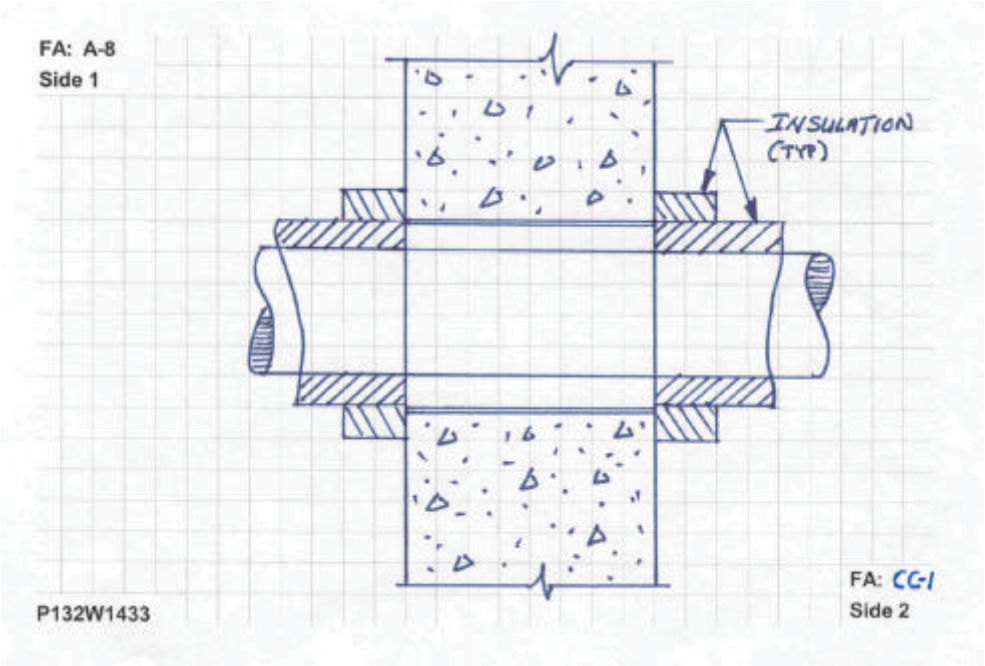

Penetration Seal Data

Appendix: B12

Photos: P132W1433

Fire Area A-8 (Side 1)

Fire Area A-8 (Side 1)

Fire Area CC-1 (Side 2)

Fire Area CC-1 (Side 2)

Penetration Seal Data

Appendix: B12

Heat Affected Zone Review: P132W1433

Fire Area (Side 1) A-8

1. 4" conduit, not within Heat Affected Zone

Fire Area (Side 2) CC-1

2. 1" nitrogen line, not within Heat Affected Zone. Insulation thickness included in dimensional distance.

Review Distances

(Reference M-663-00017A, Figure 7.2.3-1)

8" Pipe			
L1 & L2 Dist. (ft)	Temp. (°F)	R1 Radius (in)	R2 Radius (in)
0.5	1677	4.4	5.8
1	1463	3.4	4.8
1.5	1277	2.6	3.9
2	1116	1.9	3.2
2.5	976	1.2	2.6
3	855	0.7	2
3.5	750	0.2	1.6
4	659	Contact	1.2
4.5	581		0.8
5	512		0.5
5.5	453		0.2
6	402		0
6.5	358		Contact

Side 1 Photo

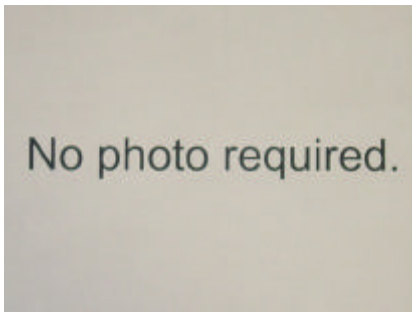

Side 2 Photo

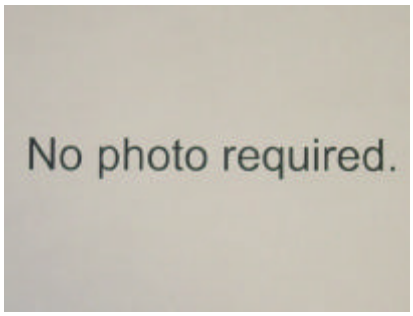

Sketch

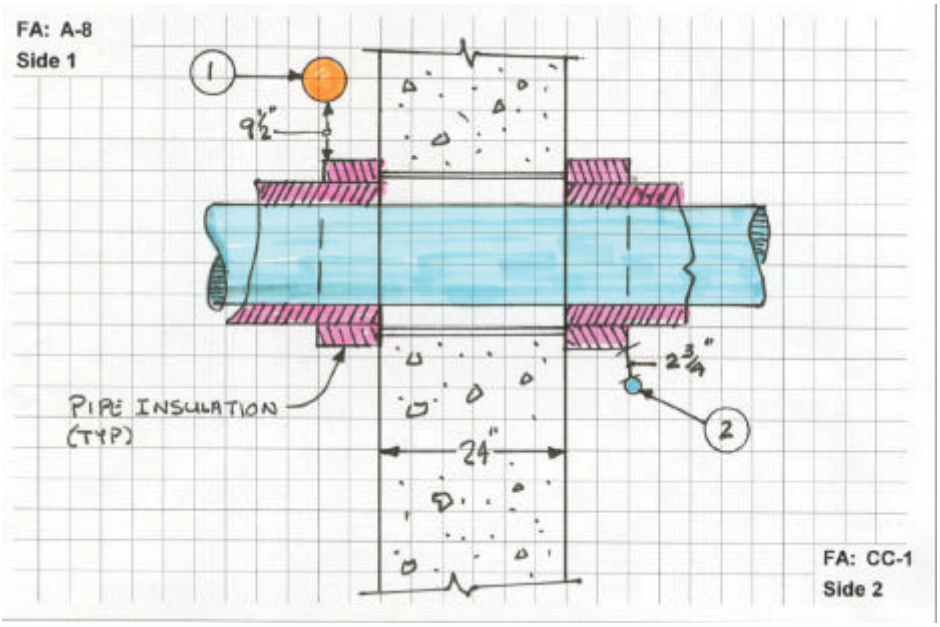

Penetration Seal Data

Appendix: B12

Penetration #: P133S0799

Penetration Type: RB-1 **Fire Area (Side 1):** A-25 **Fire Area (Side 2):** A-1

Loc./Elev.: 2000'-0" **M-0X Dwg:** M-0X1331

1. **Barrier Thickness:** 12"
2. **Opening Size:** 24"D
3. **Penetrants:** (1) 12"P
4. **Sealant Type:** Radflex
5. **Damming Side1:** Unknown
6. **Damming Side 2:** Boot
7. **Damming Continuity (Acc/Rej):** N/A
8. **Boot Condition (Acc/Rej):** Accept *
9. **Sealant Depth:** Assumed Per Detail
10. **Annular Gap (smallest):** 4"
11. **Gap between pen:** N/A
12. **Barrier Type:** F R
13. **Opening Sleeved or Concrete:** Steel
14. **Pipe Insulated:** Yes

Wayne Aregood
Prepared By:

Jeff Suter
Reviewed By:

Walkdown Comments:

* Boot for bottom side only, top side enclosed. Insulation appears to transition through the sealant zone. (WSA) (See Drawing M-13EJ02; Residual Heat Removal Train B [EJ] Line Number 009-ECB-12", 350F Design Temp, 2" thick, Classification "X" Calcium Silicate Type Insulation)

Sketch:

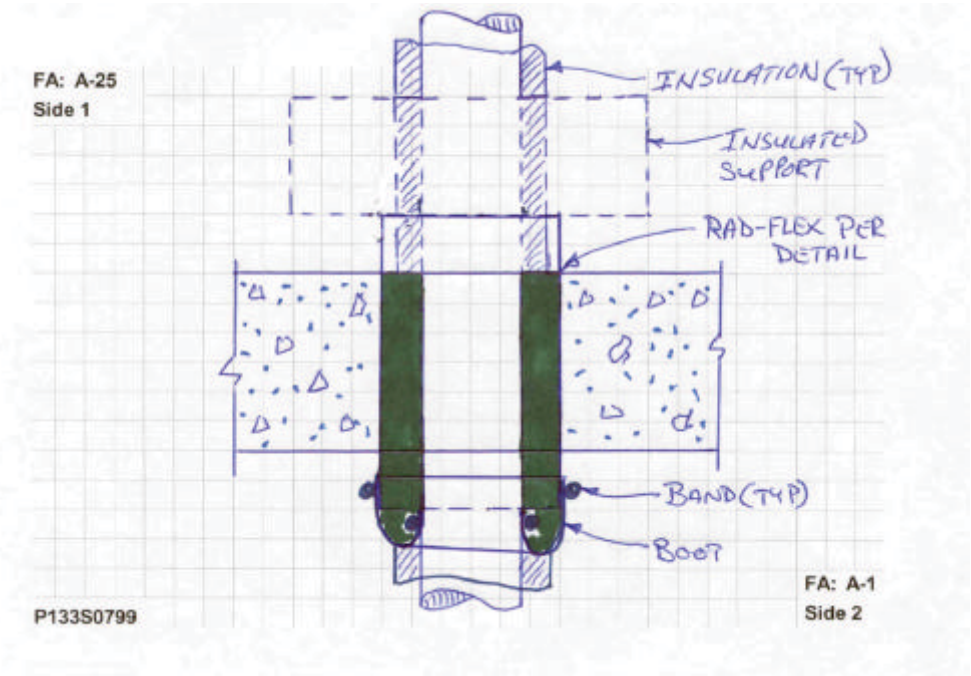

Penetration Seal Data

Appendix: B12

Photos: P133S0799

Fire Area A-25 (Side 1)

Fire Area A-25 (Side 1)

Fire Area A-1 (Side 2)

Fire Area A-1 (Side 2)

Penetration Seal Data

Appendix: B12

Heat Affected Zone Review: P133S0799

Fire Area (Side 1) A-25

No issues within Heat Affected Zone

Fire Area (Side 2) A-1

No issues within Heat Affected Zone

Review Distances

(Reference M-663-00017A, Figure 7.2.3-1)

12" Pipe			
L1 & L2 Dist. (ft)	Temp. (°F)	R1 Radius (in)	R2 Radius (in)
0.5	1712	4.6	5.9
1	1524	3.7	5.1
1.5	1357	3	4.3
2	1209	2.3	3.6
2.5	1078	1.7	3.1
3	962	1.2	2.5
3.5	860	0.7	2.1
4	769	0.3	1.7
4.5	689	Contact	1.3
5	618		1
5.5	555		0.7
6	499		0.4
6.5	450		0.2
7	406		0
7.5	368		Contact

Side 1 Photo

No photo required.

Side 2 Photo

No photo required.

Sketch

No sketch required.

Penetration Seal Data

Appendix: B12

Penetration #: P134S0860

Penetration Type: RB-1 **Fire Area (Side 1):** A-24 **Fire Area (Side 2):** A-1

Loc./Elev.: 2000'-0" **M-0X Dwg:** M-1X1341

1. **Barrier Thickness:** 12"
2. **Opening Size:** 24" D
3. **Penetrants:** (1) 12"P
4. **Sealant Type:** Radflex
5. **Damming Side1:** * Unknown
6. **Damming Side 2:** Boot
7. **Damming Continuity (Acc/Rej):** N/A
8. **Boot Condition (Acc/Rej):** * Accept
9. **Sealant Depth:** Assumed Per Detail
10. **Annular Gap (smallest):** 4"
11. **Gap between pen:** N/A
12. **Barrier Type:** F R
13. **Opening Sleeved or Concrete:** Steel
14. **Pipe Insulated:** Yes

Wayne Aregood
Prepared By:

Jeff Suter
Reviewed By:

Walkdown Comments:

Slab thickness based on drawing C-1C1311. * Top side seal is covered with support insulation and shielding, obscuring inspection attributes. Insulation appears to transition through the sealant via bottom side examination.

Sketch:

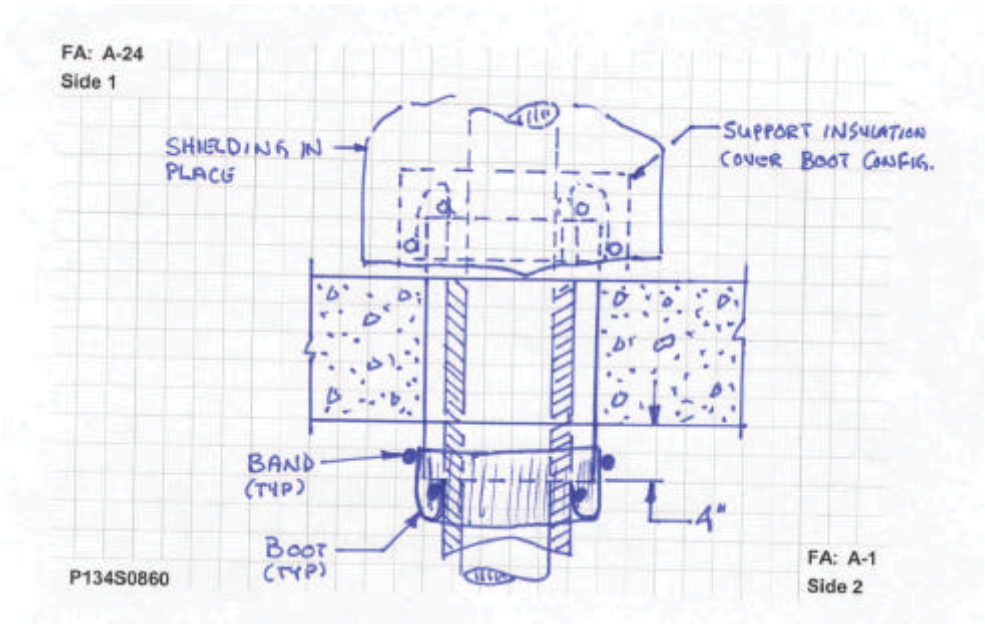

Penetration Seal Data

Appendix: B12

Photos: P134S0860

Fire Area A-24 (Side 1)

Fire Area A-24 (Side 1)

Fire Area A-1 (Side 2)

Fire Area A-1 (Side 2)

Penetration Seal Data

Appendix: B12

Heat Affected Zone Review: P134S0860

Fire Area (Side 1) A-24

1. Lead shielding (PVC coated) on pipe

Fire Area (Side 2) A-1

No issues within Heat Affected Zone

Review Distances

(Reference M-663-00017A, Figure 7.2.3-1)

12" Pipe			
L1 & L2 Dist. (ft)	Temp. (°F)	R1 Radius (in)	R2 Radius (in)
0.5	1712	4.6	5.9
1	1524	3.7	5.1
1.5	1357	3	4.3
2	1209	2.3	3.6
2.5	1078	1.7	3.1
3	962	1.2	2.5
3.5	860	0.7	2.1
4	769	0.3	1.7
4.5	689	Contact	1.3
5	618		1
5.5	555		0.7
6	499		0.4
6.5	450		0.2
7	406		0
7.5	368		Contact

Side 1 Photo

No photo required.

Side 2 Photo

No photo required.

Sketch

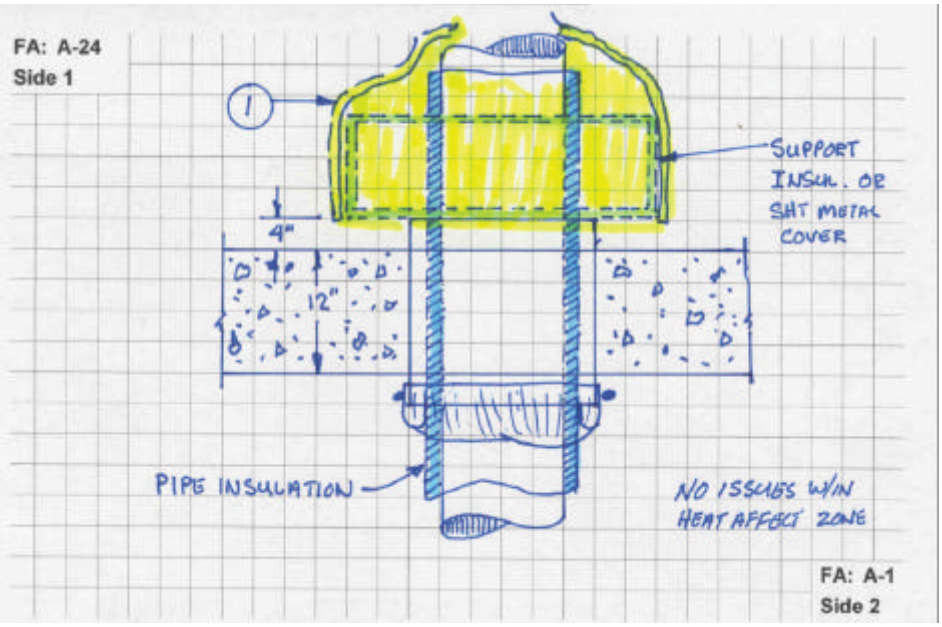

WOLF CREEK
NUCLEAR OPERATING CORPORATION

M-663-00017A

Attachment B13

Fire Protection Evaluation For Penetration Openings with Unique Bounding Attributes (PIR 2005-2384)

Rev. No.	Prepared By	Date	Reviewed By	Date
W01	Wayne S Aregood	9/9/05	Jeff Suter	9/9/05
W02	Wayne S Aregood	1/11/06	Jeff Suter	01/11/06
W06	Dale T. Krisman	2/14/17		

Table of Contents

Revision Log 3

1.0 Purpose 4

2.0 Scope 4

3.0 References 4

4.0 Evaluation 5

5.0 Conclusions 19

Appendix B13, Penetration Seal Data ……..……. (88 Total Pages)

Revision Log

Revision	Reason for Revision
W01	Original Issue
W02	Changed seal requirements for Penetration P142W1932
W06	DDCN M-663-00017A-W05-01 per 014714.

1.0 Purpose

1.1 The purpose of this document is to evaluate existing penetration seals that are not directly bounded to the typical detail limitations established in M-663-00017. This evaluation was conducted in effort to satisfy regulatory expectation regarding qualification and documentation of fire barrier penetration seals, as discussed in NRC Information Notice 88-04. This evaluation was conducted in accordance with the guidance of NRC Generic Letter 86-10.

2.0 Scope

2.1 Table I penetrations in relation to the design requirements discussed in Section 5.1.

2.2 Refer to Section 7.0 of M-663-00017A for a cross-reference list of penetrations within Table I that are evaluated for additional seal parameters that do not satisfy the typical detail limitations of M-663-00017. In these instances, the potential cumulative affects of multiple unbounded attributes were considered for each penetration of concern.

3.0 References

3.1 NRC Generic Letter 86-10, Implementation of Fire Protection Requirements, dated April 24, 1986

3.2 NRC Information Notice 88-04, Inadequate Qualification and Documentation of Fire Barrier Penetration Seals

3.3 10 CFR 50 Appendix R, Fire Protection Program For Nuclear Power Facilities Operating Prior To January 1, 1979

3.4 LER 87-10, Technical Specification Violations – Inoperable Fire Barriers Caused By Personnel Errors

3.5 M-663-00017, Penetration Seal Typical Details, Rev. W20

3.6 M-663-00111, Promatec Penetration Closure Heat Transfer Report, Rev. 3

3.7 CTP-1001, (M-663-00082) Fire Qualification Test on Silicone Foam Floor Penetration Seals, Rev. W01

3.8 CTP-1002, (M-663-00083), Fire Qualification Test on Silicone Foam Floor Penetration Seals

3.9 CTP-1020 & 1021 (M-663-00060), Fire Qualification Test on Penetration Seals

3.10 CTP-1022 (M-663-00121), Fire Qualification Test on Penetration Seals

3.11 TR-187 (M-663-00154), Fire and Hose Stream Test of a 8" thick specimen of #TCO-026 Ceramic Blanket used as a penetration seal material in a 12" diameter sleeve penetrated by bare pipe, insulated pipe, and copper, monel, and stainless steel instrument tubing

3.12 PIR 2005-2384, Unbounded Penetration Seals requiring additional design to enhance seal performance.

3.13 Work Order 05-275799, Thirty-one Penetration Seals Requiring Field Work

3.14 Work Order 03-256183, Cable Addition for Penetration P371W0948

3.15 M-162C, Specification for Non-metallic Thermal Insulation for Piping and Equipment Located In Auxiliary Building, Control Building, Diesel Generator Building, Fuel Building, and Radwaste Building For The Wolf Creek Generating Station, Rev. 19

3.16 DDCN M-162C-19-10, Subject: Pipe Insulation Control to Ensure Penetration Seal Fire Resistance Rating Maintained

4.0 Assumptions

4.1 It is assumed that existing penetration seal materials have been installed as required by applicable typical design details and procedures. This is an acceptable assumption based on a review of the Quality Control documentation maintained during initial penetration seal installation activities and the intrusive inspections conducted to address LER 87-10, regarding seal material depth.

5.0 Evaluation

5.1 <u>Assessment of Condition to Design Requirements</u>

5.1.1 Initial typical detail assignment for the Table I penetrations resulted in a condition where at least one M-663-00017 typical detail critical parameter was not satisfied for each penetration seal. The issues associated with these penetrations are generically identified below, while the Table I “Problem” column characterizes the applicable issue(s) to the respective penetration.

5.1.1.1 Penetrant size exceeds the typical detail limitations such that the seal could not be reasonably qualified as 3-hour fire (F) rated due to seal material type and/or depth.

5.1.1.2 Penetrant size exceeds the typical detail limitations. The penetration seal can be qualified by evaluation as 3-hour F rated due to seal material type and depth. However, the penetration is not directly qualified as 3-hour temperature (T) rated, and field inspection has determined that combustible materials are located within the M-663-00017A defined heat affected zone. This presents the potential for auto-ignition of

combustible materials on the unexposed barrier side, when considering a 3-hour ASTM E-119 fire intensity.

5.1.1.3 Penetrant design lateral movement exceeds typical detail limitation. For these penetrations the primary seal material (ceramic fiber) may lose resilience, if subjected to significant lateral movement compressing the ceramic fiber. This creates the potential for a through hole opening within the ceramic fiber seal. Due to the presence of a silicone impregnated boot on both barrier sides, intrusive inspection was deemed necessary to determine if identified design movements had affected seal continuity.

Each of the Table I penetrations required field work to address the issues identified above. This was initially identified in PIR 2005-2384, with field work conducted in accordance with Work Order 05-275799. The Table I "Resolution" column identifies the field work activity conducted for each penetration. Appendix B13 contains the penetration walkdown data that was utilized to assess the adequacy of the initial in plant configuration for the Table I penetrations.

TABLE I
Penetration Seal Field Work Resolution

Penetration No.	Communicating Fire Areas		Typical Detail	Problem Section	Resolution	Eval. Section
	Side 1	Side 2				
P112W1377	A-1	C-1	M-6A	5.1.1.1	Add full depth ceramic fiber to recessed side of seal (Fire Area C-1) and evaluate for F-Rating only.	5.2.5
P112W1379	A-1	C-1	M-6A	5.1.1.1	Add full depth ceramic fiber to recessed side of seal (Fire Area C-1) and evaluate for F-Rating only. Eliminate combustible storage area on A-1 side that is within the heat affected zone for the penetrant.	5.2.5
P113W0421	A-1	A-5	M-1	5.1.1.1	Add foam to satisfy M-6A and this penetration will be bounded.	5.2.1
P121S0284	A-1	A-4	RB-5A	5.1.1.2	Wrap penetration at floor up 18" (min.) with 3" (min.) ceramic fiber blanket. Encapsulate exposed ceramic fiber with a stainless steel sheet metal cover. Notch around interferences as necessary. Secure sheet metal cover with stainless steel banding.	5.2.6
P121S0285	A-1	A-4	RB-5A	5.1.1.2	Wrap penetration at floor up 18" (min.) with 3" (min.) ceramic fiber blanket. Encapsulate exposed ceramic fiber with a stainless steel sheet metal cover. Notch around interferences as necessary. Secure sheet metal cover with stainless steel banding.	5.2.6
P121S0287	A-1	A-4	RB-5A	5.1.1.2	Wrap penetration at floor up 18" (min.) with 3" (min.) ceramic fiber blanket. Encapsulate exposed ceramic fiber with a stainless steel sheet metal cover. Notch around interferences as necessary. Secure sheet metal cover with stainless steel banding.	5.2.6

Penetration No.	Communicating Fire Areas		Typical Detail	Problem Section	Resolution	Eval. Section
	Side 1	Side 2				
P132W1845	A-8	A-3	M-6A	5.1.1.1	1) Locally remove insulation to expose seal damming and to provide sufficient room to allow damming attachment on A-8 side. 2) Mechanically attach per A-5 Detail, two layers of ceramic fiber damming to the barrier surface on each A-8 side.	5.2.5
P133S0762	A-8	A-1	FB-1	5.1.1.3	Perform intrusive inspection to verify penetrant movement has not affected seal continuity.	5.2.7
P133S0784	A-25	A-1	RM-1A/A-7	5.1.1.2	Remove Armaflex from A-25 (Top Side) for a distance of at least 7'-6" from penetration and replace with noncombustible Anti-sweat insulation, if required.	5.2.4
P133S0788	A-25	A-1	RB-5A	5.1.1.2	Remove Armaflex from A-25 (Top Side) for a distance of at least 7'-6" from penetration and replace with noncombustible Anti-sweat insulation, if required.	5.2.2
P133W2037	A-8	A-25	M-1	5.1.1.1	Add full depth ceramic fiber to recessed side of seal (Fire Area A-25) and evaluate for F-and T rating.	5.2.5
P133W2042	A-8	A-25	M-1	5.1.1.1	Add full depth ceramic fiber to recessed side of seal (Fire Area A-25) and evaluate for F-Rating only.	5.2.5
P134S0877	A-24	A-1	RB-5A	5.1.1.2	Remove Armaflex from A-24 (Top Side) for a distance of at least 7'-6" from penetration and replace with noncombustible Anti-sweat insulation, if required.	5.2.2
P134W2054	A-8	A-24	M-1	5.1.1.1	Add full depth ceramic fiber to recessed side of seal (Fire Area A-8) and evaluate for F-Rating only.	5.2.5
P141S1015	A-16	A-8	M-6A	5.1.1.1	1) Add full depth ceramic fiber to sleeve on topside (Fire Area A-16) and evaluate for F-Rating only. 2) Remove Armaflex (Top Side) for a distance of at least 4' on the 4" pipe connected to the main pipe and locally remove Armaflex from the 4" pipe with air gap for a minimum distance of to 12" from closest contact point, both directions and replace with noncombustible Anti-sweat insulation, if required.	5.2.5
P141S1023	A-16	A-8	M-6A	5.1.1.1	Add full depth ceramic fiber to sleeve on topside (Fire Area A-16) and evaluate for F-Rating only.	5.2.5
P141W1907	A-16	A-26	M-1	5.1.1.1	Add ceramic fiber to sleeve in Fire Area A-26 and mechanically attach a single layer of ceramic fiber board to barrier on A-26 side. Evaluate for F-Rating only.	5.2.5
P141W1908	A-16	A-26	M-1	5.1.1.1	Add ceramic fiber to sleeve in Fire Area A-26 and mechanically attach a single layer of ceramic fiber board to barrier on A-26 side. Evaluate for F-Rating only.	5.2.5
P141W1913	A-16	A-26	M-1	5.1.1.1	Add foam to satisfy M-6A, which will bound penetration.	5.2.1

Penetration No.	Communicating Fire Areas		Typical Detail	Problem Section	Resolution	Eval. Section
	Side 1	Side 2				
P142S1083	A-16	A-3	M-1	5.1.1.1	Add ceramic fiber flush with sleeve on the topside (Fire Area A-16) and evaluate as F-Rated only.	5.2.5
P142S1086	A-16	A-3	FB-1	5.1.1.2	Remove Armaflex (Top Side) for a distance of at least 12" from closest point (Both Directions) of main penetrating pipe and replace with noncombustible Anti-Sweat insulation, if required.	5.2.3
P142W1932	A-16	A-10	M-6A	5.1.1.1	Remove existing silicone foam seal and damming from the 2026' Corridor (A-16) side and add full depth ceramic fiber to the penetration from the A-16 side. Evaluate for F-Rating only.	5.2.9
P143W2514	A-16	A-5	M-1	5.1.1.1	Add full depth ceramic fiber to recessed side of seal (Fire Area A-16) and mechanically attach at least one layer of ceramic fiber board to barrier on A-16 side. Evaluate for F-Rating only.	5.2.5
P143W2515	A-16	A-5	M-6A	5.1.1.1	Mechanically attach at least one layer of ceramic fiber board to barrier on A-16 side. Evaluate for F-Rating only.	5.2.5
P145S0952	A-23	A-15	FB-1	5.1.1.3	Perform intrusive inspection to verify penetrant movement has not affected seal continuity.	5.2.7
P145S0954	A-23	A-15	FB-1	5.1.1.3	Perform intrusive inspection to verify penetrant movement has not affected seal continuity.	5.2.7
P152W1421	A-19	CC-1	M-1	5.1.1.1	Add full depth ceramic fiber to recessed side of seal (Fire Area CC-1) and evaluate for F-Rating only.	5.2.5
P311W0841	C-1	CC-1	M-6A	5.1.1.1	Add full depth ceramic fiber to recessed side of seal (Fire Area CC-1) and evaluate for F-Rating only.	5.2.5
P311W0842	C-1	CC-1	M-6A	5.1.1.1	Add full depth ceramic fiber to recessed side of seal (Fire Area CC-1) and evaluate for F-Rating only.	5.2.5
P311W0845	C-1	CC-1	M-6A	5.1.1.1	Add full depth ceramic fiber to recessed side of seal (Fire Area CC-1) and evaluate for F-Rating only.	5.2.5
P611W0206	F-2	F-3	M-1	5.1.1.1	Add ceramic fiber to recessed side of penetration (Fire Area F-2) and mechanically attach a single layer of ceramic fiber board to barrier on F-2 side. Evaluate for F-Rating only.	5.2.5

5.1.2 Work Order 03-256183 identified that during installation of additional cables through penetration P371W0948 it was noted that the gap tolerances for installing foam per CNT-MC-905 could not be obtained between the new cables and the cable tray sleeve. The resulting seal configuration observed in the field is not directly bounded by typical detail E-2A from M-663-00017.

5.2 Evaluation of Condition

5.2.1 Silicone Foam Added - Bounding to M-6A Detail

The Table I penetration seals referring to this section have a penetrant size that exceeds the M-1 typical detail bounding limitation. The addition of RTV Silicone Foam material to a minimum 9” depth between 1” thick ceramic fiber damming results in penetration attributes that are bounded by the limiting parameters of typical detail M-6A from M-663-00017. Therefore, no further evaluation is required.

5.2.2 RB-5A Detail with Armaflex Removed from HAZ

The HDSE/HDLE annular reduction seals for the Table I penetrations referring to this section are bounded by the limitations of typical detail RM-1A, which allows up to an 18” pipe penetrant for an HDSE/HDLE seal. The unbounded portion necessitating evaluation is the penetrant size in relation to the annular gap sealed with ceramic fiber and a silicone impregnated boot. Figure 1 reflects the RB-5A typical detail seal configuration.

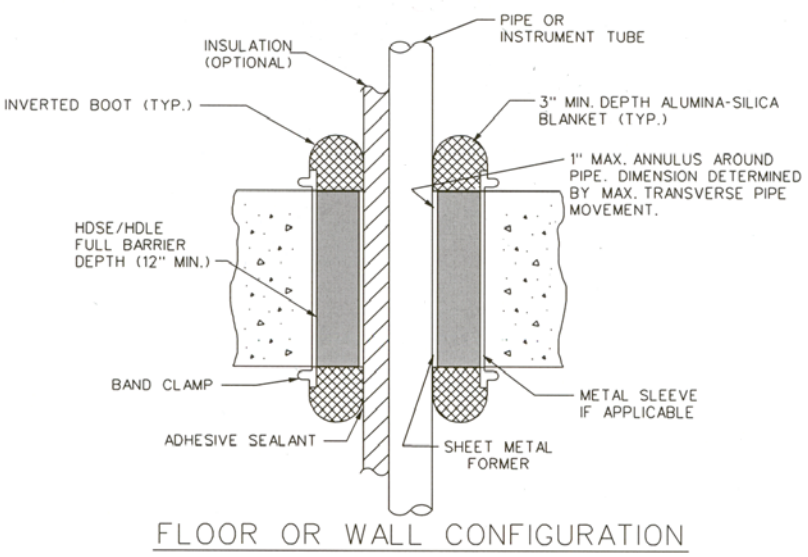

FIGURE 1
Typical Detail RB-5A
(Reference M-663-00017)

These penetrations are considered 3-hour F rated based on the successful performance of Penetration 1 from fire test CTP-1022. The tested configuration was comprised of a 10” opening containing a 2” diameter pipe penetrant. The opening was sealed with a 12” depth of HDLE leaving a 1” annulus around the pipe penetrant. Silicone impregnated boots filled with a 3” ceramic fiber depth were then installed beyond the barrier plane on both penetration sides. This presented a seal configuration consistent with Figure 1 above.

Industry fire testing reveals that the exposed side boot is sacrificial and will be consumed when directly subjected to an ASTM E-119 fire. The loss of this boot will result in the loss of the exposed side ceramic fiber due to gravity, since the only structural support provided for the material beyond the barrier plane is that presented by the boot. However, the unexposed side boot with ceramic fiber fill will remain in tact, and adequately prevent fire propagation via the small annular gap between the pipe penetrant and the HDSE/HDLE sidewall. This ceramic fiber and boot configuration will not be charred or consumed during the fire exposure. The ceramic fiber will be maintained in position by the unexposed side boot, which is not determinately impacted, because it is not subjected to direct flame impingement.

Considering the performance of Penetration 1 from CTP-1022 and the and the non-ablative material properties of ceramic fiber, penetrant size will not impact seal F rating. However, fire testing does not directly bound a T rating for penetrants larger than 2” diameter.

M-663-00017 identifies that where piping penetrations exist that do not satisfy T rating requirements, a seal assembly with an F rating corresponding to the hourly rating of the associated barrier is acceptable, provided evaluation demonstrates that exposed insitu combustibles and redundant post fire safe shutdown (PFSSD) equipment/circuits on the unexposed barrier side will not be detrimentally affected by the increased penetrant temperatures.

In effort to evaluate fire area impact, field walkdowns and comprehensive assessment reviews, documented in Appendix B13, were conducted for each penetration of concern. This review was completed in accordance with the criteria and review methodology established in M-663-00017A Section 7.2.3 for non-T rated penetrations.

The review identified that once the combustible Armaflex is removed from the heat affected zone, no other exposed insitu combustibles or PFSSD circuits are located within the HAZ. Each of the penetrations satisfy the review criteria of M-663-00017 where T rating requirements are not met. Therefore, the penetrations are acceptable, as this evaluation demonstrates reasonable assurance that the penetration seals do not present a negative impact to PFSSD capability.

5.2.3 <u>FB-1 Detail with Armaflex Removed from HAZ</u>

Penetration P142S1086 contains a pipe penetrant (24” diameter) that exceeds the size limitation directly bounded by typical detail FB-1 from M-663-00017. The FB-1 detail, which is comprised of a 12” ceramic fiber depth between silicone impregnated fiberglass boots, directly qualifies a seal with up to a 6” diameter penetrant as 3-hour fire F and T rated.

Penetration P142S1086 is considered 3-hour F rated based on the successful performance of the following fire tested configurations, which

demonstrate that a minimum 8” depth of ceramic fiber will prevent the passage of flame and hose stream to the unexposed barrier side.

- TR-187 – 12” diameter opening containing a 2” bare and insulted pipe and three ½” diameter tube penetrants. The penetration was sealed with an 8” depth of ceramic fiber blanket.

- CTP-1002 Penetration 6 – 12” diameter opening containing a 6” bare pipe penetrant. The penetration was sealed with a 12” depth of ceramic fiber blanket between silicone impregnated fiberglass boots.

- CTP-1002 Penetration 10 – 12” diameter opening containing a 6” insulated pipe penetrant. The penetration was sealed with a 12” depth of ceramic fiber blanket between silicone impregnated fiberglass boots.

- CTP-1020 Penetration 1 – 6” diameter opening containing a 2” bare pipe penetrant. The penetration was sealed with a 12” depth of ceramic fiber blanket between silicone impregnated fiberglass boots.

- CTP-1021 Penetration 1 – 10” diameter opening containing a 2” bare pipe penetrant. The penetration was sealed with a 12” depth of ceramic fiber blanket between silicone impregnated fiberglass boots.

Ceramic fiber is an inert material comprised of compressed refractory fibers. It is not charred or consumed during fire exposure. The material will not be negatively affected by heat transmission through the penetrating item. Therefore, penetrant size is not a concern regarding capability of a ceramic fiber seal to prevent flame and hose stream passage to the unexposed side. However, penetrant size is a concern regarding unexposed side temperature development. Based on a comparison to the fire tested configurations bounding detail FB-1, penetration P142S1086 is not considered T rated.

M-663-00017 identifies that where piping penetrations exist that do not satisfy T rating requirements, a seal assembly with an F rating corresponding to the hourly rating of the associated barrier is acceptable, provided evaluation demonstrates that exposed insitu combustibles and redundant post fire safe shutdown (PFSSD) equipment/circuits on the unexposed barrier side will not be detrimentally affected by the increased penetrant temperatures.

In effort to evaluate fire area impact, field walkdowns and comprehensive assessment reviews, documented in Appendix B13, were conducted for penetration P142S1086. This review was completed in accordance with the criteria and review methodology established in M-663-00017A Section 7.2.3 for non-T rated penetrations.

The review identified that once the combustible Armaflex insulation is removed from the heat affected zone, no other exposed insitu combustibles or PFSSD circuits are located within the HAZ. The penetration satisfies the review criteria of M-663-00017 where T rating requirements are not met. Therefore, the penetration is acceptable, as this evaluation demonstrates reasonable assurance that the penetration seals do not present a negative impact to PFSSD capability.

5.2.4 RM-1A /A-7 Detail with Armaflex Removed from HAZ

Penetration P133S0784 is an HSDE/HDLE annular reduction seal with the annular gap between the pipe and high density elastomer sealed with ceramic fiber. The pipe penetrant is 14" diameter. The HDSE/HDLE portion of the seal is bounded by the limitations of typical detail RM-1A, which allows up to an 18" pipe penetrant for an HDSE/HDLE seal. The unbounded portion necessitating evaluation is the penetrant size in relation to the annular gap sealed with ceramic fiber. Ceramic fiber seal detail A-7 qualifies up to a 2" pipe penetrant as 3-hour F and T rated.

This penetration is considered 3-hour F rated based on the discussion provided in Section 5.2.3 for a ceramic fiber sealed penetration. However, the penetration is not considered T rated based on the large penetrant size.

M-663-00017 identifies that where piping penetrations exist that do not satisfy T rating requirements, a seal assembly with an F rating corresponding to the hourly rating of the associated barrier is acceptable, provided evaluation demonstrates that exposed insitu combustibles and redundant post fire safe shutdown (PFSSD) equipment/circuits on the unexposed barrier side will not be detrimentally affected by the increased penetrant temperatures.

In effort to evaluate fire area impact, field walkdowns and comprehensive assessment reviews, documented in Appendix B13, were conducted for penetration P133S0784. This review was completed in accordance with the criteria and review methodology established in M-663-00017A Section 7.2.3 for non-T rated penetrations.

The review identified that once the combustible Armaflex insulation is removed from the heat affected zone, no other exposed insitu combustibles or PFSSD circuits are located within the HAZ. The penetration satisfies the review criteria of M-663-00017 where T rating requirements are not met. Therefore, the penetration is acceptable, as this evaluation demonstrates reasonable assurance that the penetration seals do not present a negative impact to PFSSD capability.

5.2.5 Ceramic Fiber Added to Silicone Foam Seal

Each of the Table I penetrations referring to this section contain a large penetrant size that is not directly bounded by detail M-1 or M-6A. The primary seal material (Silicone Foam) for these penetrations chars during fire exposure, with the char rate typically accelerating as the penetrant size increases. This is the case due to the increased thermal mass presented by a large diameter penetrant. Considering an ASTM E-119 3-hour fire exposure, the thermal mass of a penetrant larger than that bounded by fire testing could potentially contribute to an increased seal char rate and ultimately present a seal failure mode.

To address this concern, seal performance was enhanced by adding ceramic fiber materials to the existing seal configuration to ensure a 3-hour F rating capability. The recessed area of existing penetration seals were either filled with compressed ceramic fiber and/or additional ceramic fiberboards were added to one or both sides of the barrier penetration seal, depending on in-plant configuration. Ceramic fiber is an inert material comprised of compressed refractory fibers. It is not charred or consumed during fire exposure. The material will not be negatively affected by heat transmission through the penetrating item. The addition of the ceramic fiber optimizes the capability of the penetration seal to resist the affects of Silicone Foam consumption and thermal propagation (conduction and radiant energy) along the large penetrant. Therefore, ensuring that the seal will prevent the passage of flame for a 3-hour duration. However, due to the large penetrant size, these penetrations are not considered T rated.

M-663-00017 identifies that where piping penetrations exist that do not satisfy T rating requirements, a seal assembly with an F rating corresponding to the hourly rating of the associated barrier is acceptable, provided evaluation demonstrates that exposed insitu combustibles and redundant post fire safe shutdown (PFSSD) equipment/circuits on the unexposed barrier side will not be detrimentally affected by the increased penetrant temperatures.

In effort to evaluate fire area impact, field walkdowns and comprehensive assessment reviews, documented in Appendix B13, were conducted for each penetration of concern. This review was completed in accordance with the criteria and review methodology established in M-663-00017A Section 7.2.3 for non-T rated penetrations.

The review identified that once the combustible Armaflex is removed from the heat affected zone (where required by Table I), no other exposed insitu combustibles or PFSSD circuits are affected within the HAZ. Each of the penetrations satisfies the review criteria of M-663-00017 where T rating requirements are not met. Therefore, the penetrations are acceptable, as this evaluation demonstrates reasonable assurance that the penetration seals do not present a negative impact to PFSSD capability.

5.2.6 Thermal Protective Jacket added to RB-5A Details

The Table I penetration seals referring to this section have penetrant sizes exceeding the bounding limitations of the assigned typical detail. These RB-5A penetrations are 3-hour F rated based on the discussion provided in Section 5.2.2. However, the penetrations are not considered T rated based on the penetrant size exceeding the limitations of the typical detail. Typical detail RB-5A bounds up to a 2" diameter pipe as 3-hour F and T rated, while the penetrations of concern each contain a 4" diameter steel pipe penetrant.

M-663-00017 identifies that where piping penetrations exist that do not satisfy T rating requirements, a seal assembly with an F rating corresponding to the hourly rating of the associated barrier is acceptable, provided evaluation demonstrates that exposed insitu combustibles and redundant post fire safe shutdown (PFSSD) equipment/circuits on the unexposed barrier side will not be detrimentally affected by the increased penetrant temperatures.

In effort to evaluate fire area impact, field walkdowns and comprehensive assessment reviews, documented in Appendix B13, were conducted for each penetration of concern. This review was completed in accordance with the criteria and review methodology established in M-663-00017A Section 7.2.3 for non-T rated penetrations.

The HAZ review identified that combustible Armaflex anti-sweat insulation is provided on the pipe within the heat affected zone on the bottom side of each penetration. No other exposed insitu combustibles or PFSSD circuits are located within the HAZ. In all cases, the pipe penetrating the barrier opening is protected with fiberglass insulation on the topside and the bottom side is protected with Armaflex insulation. No insulation transitions through the seal. It has been determined that Armaflex anti-sweat insulation is combustible and should be removed from the pipe on the unexposed side of the barrier for a sufficient distance that will eliminate auto-ignition concerns. However, since the location is within a radiological and/or contaminated area along the ceiling in areas that are difficult to access, an alternative measure was chosen. This involved protecting the topside penetration seal configuration with a thermal protective jacket to lower unexposed side temperatures on the bottom side in effort to prevent potential auto-ignition of the Armaflex type insulation.

This thermal protective jacket is constructed by wrapping the penetration sleeve, boot and existing pipe insulation with 3" thick ceramic fiber blanket for a distance of 18" from the floor interface. The ceramic fiber is then encapsulated with a 20-gage stainless steel cover, banded in place to prevent dislodgement during potential hose stream activities. As necessary, the jacket design was locally notched at interferences to eliminate system interaction. See Figure 2 for the thermal protective jacket design.

Ceramic fiber is the primary insulating component of the thermal jacket design. Ceramic fiber has been tested and qualified through penetration and seismic gap seal testing programs. Ceramic fiber products are inert and will remain in place for the entire 3-hour qualification period with no material consumption. The resulting installation, as shown in Figure 2, will provide an additional 18" x 3" thick thermal protective barrier along the pipe penetrant to enable lowering of unexposed side temperatures, which will prevent auto-ignition of the Armaflex that is present on the bottom side of the penetration. The thermal jacket design is installed over existing insulation, thus providing added protection from radiant and conductive energy that could develop from fire exposure on the topside of the barrier. The end result protective configuration provides a cumulative seal depth of approximately 37". The bounding fire tested seal depth was 12" of HDLE between boots containing a 3" depth of ceramic fiber.

Pipe penetrants that utilize fiberglass insulation are protected up to the ceramic filled boot that is part of the installed penetration seal design, thus significantly reducing thermal insult during fire exposure to the installed penetrants. M-663-00111 demonstrated that insulating pipe penetrants through the seal material would significantly reduce thermal exposure to the seal material and penetrant. This report documented a significant drop in interface temperatures as a result of installed piping insulation. The actual drop varies depending on postulated system temperatures and insulation thickness, but in all cases the reported temperature drop is significant.

This thermal benefit logic can be applied to fire exposure when considering that the pipe penetrants being evaluated are only slightly larger than that previously evaluated in M-663-00017, Detail RB-5A. Therefore, direct flame impingement to the test article would be more severe than that expected for the Table I pipe penetrations protected with ceramic fiber thermal jacketing. Based on the construction attributes of the existing insulation and thermal jacketing, it is reasonable to conclude that the penetration seals identified in Table I would resist the affects of fire exposure and prevent conductive and radiant energy exposure to unexposed side of the barrier for a 3-hour duration. Therefore, Table I penetration seals referencing this section are 3-hour F rated and will prevent the auto-ignition of Armaflex type insulation on the unexposed side of the barrier.

Structurally, the addition of the insulating jacket will not affect the seismic qualification, system performance, or the performance of any SSCs in proximity to the seals. The insulating jacket design is self-supporting to the floor, compressible, and will move with any system moment as with the current insulation material installed on the pipes.

Based on the above discussions and considering the installed 37" (approximate) seal design and the pipe penetrant size in relation to that bounded by testing, it is reasonable to conclude that the additional thermal jacket design will provide the additional protection necessary to

prevent potential auto-ignition of the unexposed side Armaflex present on the pipe penetrant. Therefore, the penetrations are acceptable, as this evaluation demonstrates reasonable assurance that the penetration seals do not present a negative impact to PFSSD capability.

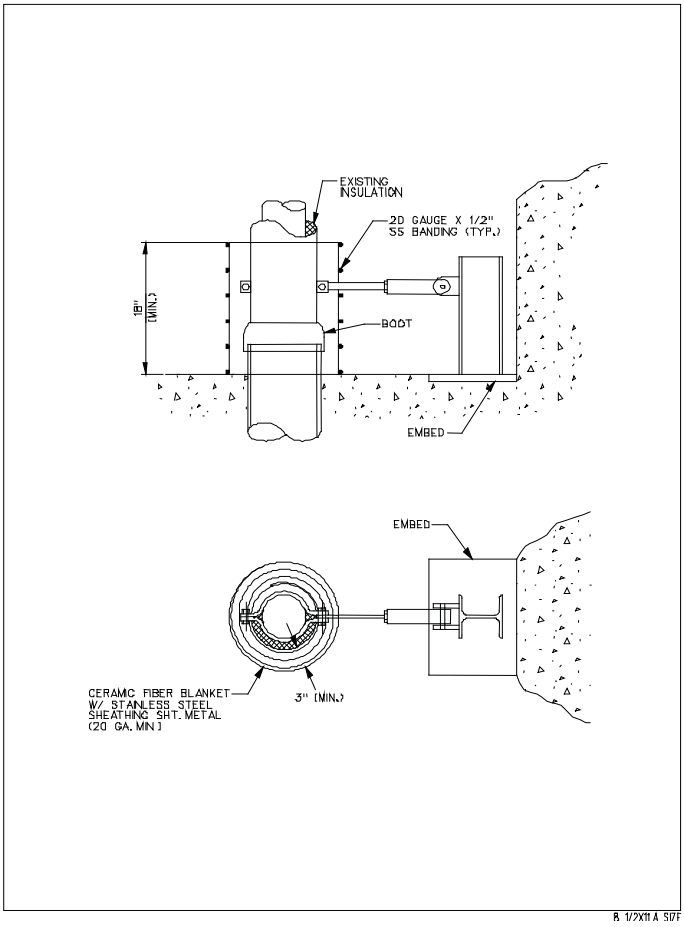

FIGURE 2
Thermal Protective Jacket

5.2.7 Penetrations with Lateral Movement Exceeding Typical Detail

Penetration seals referring to this section have design penetrant movement that exceeds the bounding limitations of the installed seal configuration. The movement specifically evaluated and inspected were lateral movements that could potentially compress the ceramic fiber within the penetration opening during system operational cycles. Because significant lateral movement is a worse case scenario these penetrations could not be evaluated acceptable in accordance with Attachment B4.

Therefore, intrusive examination was performed to assess the internal ceramic fiber condition. This inspection revealed that no through-hole opening was present and therefore, these ceramic fiber details (FB-1) are fully bounded in accordance with the penetration attributes. Considering that the plant has been operating for 20 years and has experienced numerous system cycles, it is reasonable to conclude that these booted penetrations have been subjected to the typical system movement that will be seen through the life of the plant. Therefore, no further evaluation is required.

5.2.8 Penetration P371W0948

Penetration P371W0948 is a cable tray blockout through a 12” thick concrete wall. The current seal configuration is not directly bounded by assigned detail E-2A. The actual seal configuration is 10” Silicone Foam with 1” ceramic fiber damming flush with the barrier plane on both sides with the exception of the cable chase side, where in isolated areas of cable congestion at the top of the blockout, damming continuity is not maintained due to substantial cable fill. At these locations, Silicone Foam is present in lieu of ceramic fiber damming. The resulting overall seal depth for the penetration is maintained at 12”.

This configuration provides an acceptable seal based on comparison to the requirements of typical details E-2A and E-18. E-2A requires a 9” Silicone Foam depth between 1” ceramic fiber damming, while E-18 requires a 12” Silicone Foam depth and no damming. The penetration of concern contains a minimum 10” Silicone Foam depth with isolated areas providing a 12” foam depth. Industry fire testing has demonstrated that a 1” ceramic fiber depth provides superior fire resistive performance to that provided by a 1” Silicone Foam depth. Considering this, the penetration seal configuration for P371W0948 is at least equivalent to detail E-18, as Silicone Foam depth is either 12” per the detail requirements or an equal thickness of ceramic fiber damming is substituted for Silicone Foam, where the foam depth is 10”. Therefore, the penetration is considered 3-hour F and T rated.

5.2.9 Penetration P142W1932

Penetration P142W1932 contains a large penetrant size that is not directly bounded by detail M-6A. As discussed in Section 5.2.5, the primary seal material (Silicone Foam) chars during fire exposure, with the char rate typically accelerating as the penetrant size increases.

To address this concern, the Silicone Foam seal will be removed and a full barrier (36”) thick ceramic fiber seal will be installed. This seal configuration was necessary, as it was not cost effective or ALARA wise to add ceramic fiber to the recessed side of the existing seal in the ‘A’ RHR Heat Exchanger Room (A-10), where the penetration is located 30 feet from the floor. The seal work will be conducted in the 2026’ Corridor 1408 (A-16) where the seal is readily accessible. This action will

necessitate original seal removal, since it is installed flush with the barrier plane on the A-16 side.

Ceramic fiber is an inert material comprised of compressed refractory fibers. It is not charred or consumed during fire exposure. The material will not be negatively affected by heat transmission through the penetrating item. Therefore, penetrant size is not a concern regarding capability of a ceramic fiber seal to prevent flame and hose stream passage to the unexposed side, as the material depth and penetration annulus are well within the bounding limitations of typical ceramic fiber seal detail A-7 from M-663-00017. However, penetrant size is a concern regarding unexposed side temperature development. Therefore, penetration P142W1932 is considered F but not T rated.

M-663-00017 identifies that where piping penetrations exist that do not satisfy T rating requirements, a seal assembly with an F rating corresponding to the hourly rating of the associated barrier is acceptable, provided evaluation demonstrates that exposed insitu combustibles and redundant post fire safe shutdown (PFSSD) equipment/circuits on the unexposed barrier side will not be detrimentally affected by the increased penetrant temperatures.

In effort to evaluate fire area impact, a field walkdown and comprehensive assessment review, documented in Appendix B13, was conducted for the penetration of concern. This review was completed in accordance with the criteria and review methodology established in M-663-00017A Section 7.2.3 for non-T rated penetrations.

The review identified that no exposed insitu combustibles or PFSSD circuits are affected within the HAZ. The penetration satisfies the review criteria of M-663-00017 where T rating requirements are not met. Therefore, P142W1932 is acceptable, as this evaluation demonstrates reasonable assurance that the penetration seal does not present a negative impact to PFSSD capability.

5.3 Post Fire Safe Shutdown Impact

There is no impact to PFSSD systems or components as a result of this evaluation. The Table I penetrations are evaluated as 3-hour F rated or are 3-hour F and T rated where stated. The comprehensive walkdown review for each of the non-T rate penetration seals revealed that no exposed insitu combustibles outside what was evaluated existed, and no PFSSD circuits are negatively affected by the non-T rated penetrations. Therefore, no PFSSD circuits are negatively affected by the non-T rated penetrations

6.0 Conclusions

Based on the above discussions, it is reasonable to conclude that the Table I penetration seals that were not bounded to T rating requirements are acceptable as 3-hour F rated and will perform their intended design function. The additional modification made to these penetrations significantly enhance the seal performance, ensuring that regulatory requirements and commitments as well as WCNOC Fire Protection Program requirements to prevent spread of fire from one fire area to another are satisfied. It has also been determined through this evaluation that the lack of a T rating will not affect the plant's ability to achieve and maintain PFSSD.

Penetration Seal Data

Appendix: B13

Penetration #: P112W1377

Penetration Type: M-6A **Fire Area (Side 1):** A-1 **Fire Area (Side 2):** C-1

Loc./Elev.: 1979'-6" **M-0X Dwg:** M-1X1902

1. **Barrier Thickness:** 36"
2. **Opening Size:** 42"D
3. **Penetrants:** (1)30"P
4. **Sealant Type:** Foam
5. **Damming Side1:** Flush
6. **Damming Side 2:** 25" recessed
7. **Damming Continuity (Acc/Rej):** Accept
8. **Boot Condition (Acc/Rej):** N/A
9. **Sealant Depth:** 9"
10. **Annular Gap (smallest):** 2"
11. **Gap between pen:** N/A
12. **Barrier Type:** A F
13. **Opening Sleeved or Concrete:** Steel
14. **Pipe Insulated:** Yes

Wayne Aregood
Prepared By:

Jeff Suter
Reviewed By:

Walkdown Comments:
Insulation abuts damming, does not transition through seal zone.

Sketch:

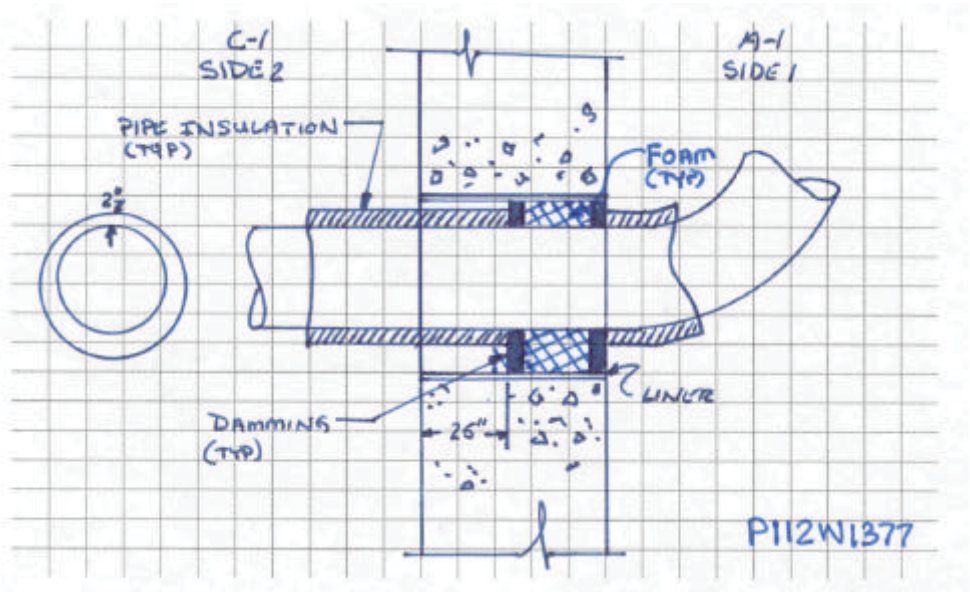

Penetration Seal Data

Appendix: B13

Photos: P112W1377

Fire Area A-1 (Side 1)

Fire Area A-1 (Side 1)

Fire Area C-1 (Side 2)

Fire Area C-1 (Side 2)

Penetration Seal Data

Appendix: B13

Heat Affected Zone Review: P112W1377

Fire Area (Side 1) A-1

1. 1-1/2" Cond. 5J3022, not within Heat Affected Zone.

Fire Area (Side 2) C-1

2. 4" Cond. 4U1F1A, not with Heat Affected Zone
3. 3/4" Cond. 4J3018, not within Heat Affected Zone
4. 1" Cond. 6J1A1D, not within Heat Affected Zone

Review Distances

(Reference M-663-00017A, Figure 7.2.3-1)

30" Pipe			
L1 & L2 Dist. (ft)	Temp. (°F)	R1 Radius (in)	R2 Radius (in)
0.5	1706	4.5	5.9
1	1513	3.7	5
1.5	1342	2.9	4.2
2	1192	2.2	3.6
2.5	1059	1.6	3
3	942	1.1	2.4
3.5	839	0.6	2
4	748	0.2	1.6
4.5	668	Contact	1.2
5	597		0.9
5.5	535		0.6
6	480		0.4
6.5	432		0.1
7	389		Contact

Side 1 Photo

Side 2 Photo

Sketch

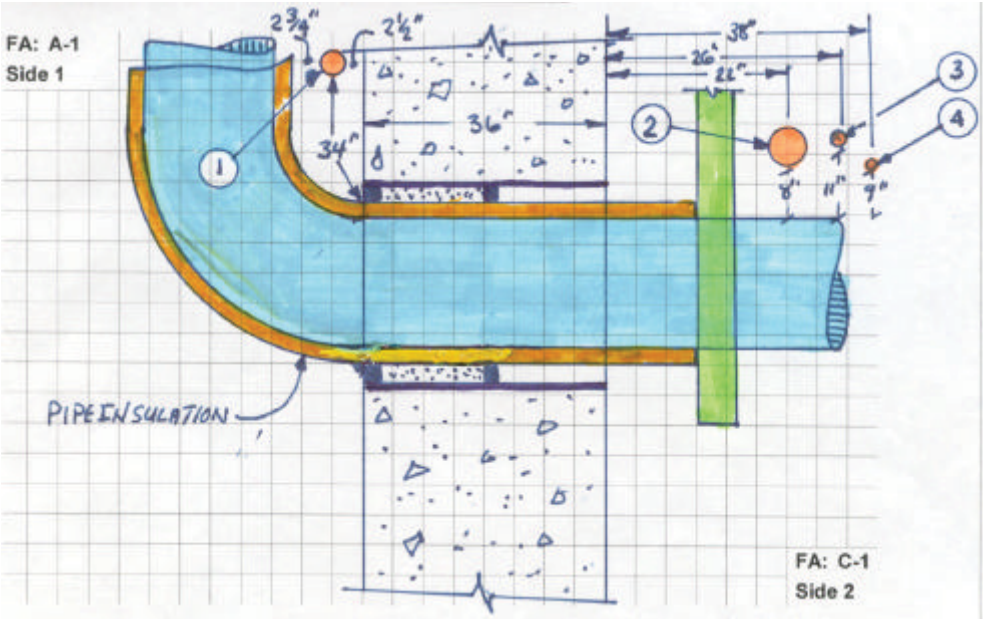

Penetration Seal Data

Appendix: B13

Penetration #: P112W1379

Penetration Type: M-6A **Fire Area (Side 1):** A-1 **Fire Area (Side 2):** C-1

Loc./Elev.: 1979'-6" **M-0X Dwg:** M-1X1902

1. **Barrier Thickness:** 36"
2. **Opening Size:** 42"D
3. **Penetrants:** (1)30"P
4. **Sealant Type:** Foam
5. **Damming Side1:** Flush
6. **Damming Side 2:** 24" recessed
7. **Damming Continuity (Acc/Rej):** Accept
8. **Boot Condition (Acc/Rej):** N/A
9. **Sealant Depth:** 10"
10. **Annular Gap (smallest):** 1 1/2"
11. **Gap between pen:** N/A
12. **Barrier Type:** A F
13. **Opening Sleeved or Concrete:** Steel
14. **Pipe Insulated:** Yes

Wayne Aregood
Prepared By:

Jeff Suter
Reviewed By:

Walkdown Comments:
Insulation abuts damming, does not transition through seal zone.

Sketch:

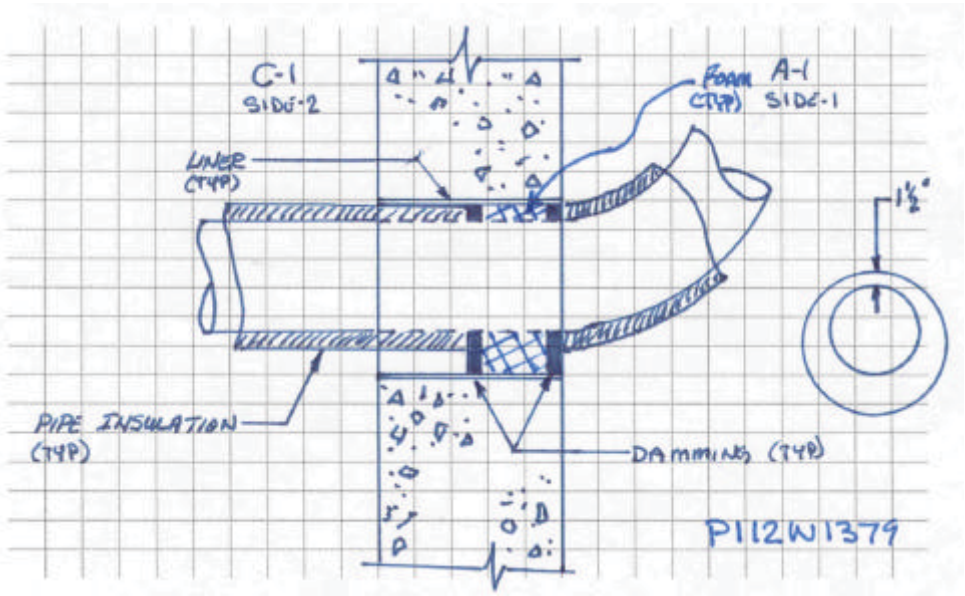

Penetration Seal Data

Appendix: B13

Photos: P112W1379

Fire Area A-1 (Side 1)

Fire Area A-1 (Side 1)

Fire Area C-1 (Side 2)

Fire Area C-1 (Side 2)

Penetration Seal Data

Appendix: B13

Heat Affected Zone Review: P112W1379

Fire Area (Side 1) A-1

1. Security communications cable, not within Heat Affected Zone
2. Combustible Material Storage Area directly adjacent and under penetration seal.

Fire Area (Side 2) C-1

2. 3/4" lighting conduit, not within Heat Affected Zone

Review Distances

(Reference M-663-00017A, Figure 7.2.3-1)

30" Pipe			
L1 & L2 Dist. (ft)	Temp. (°F)	R1 Radius (in)	R2 Radius (in)
0.5	1706	4.5	5.9
1	1513	3.7	5
1.5	1342	2.9	4.2
2	1192	2.2	3.6
2.5	1059	1.6	3
3	942	1.1	2.4
3.5	839	0.6	2
4	748	0.2	1.6
4.5	668	Contact	1.2
5	597		0.9
5.5	535		0.6
6	480		0.4
6.5	432		0.1
7	389		Contact

Side 1 Photo

Side 2 Photo

Sketch

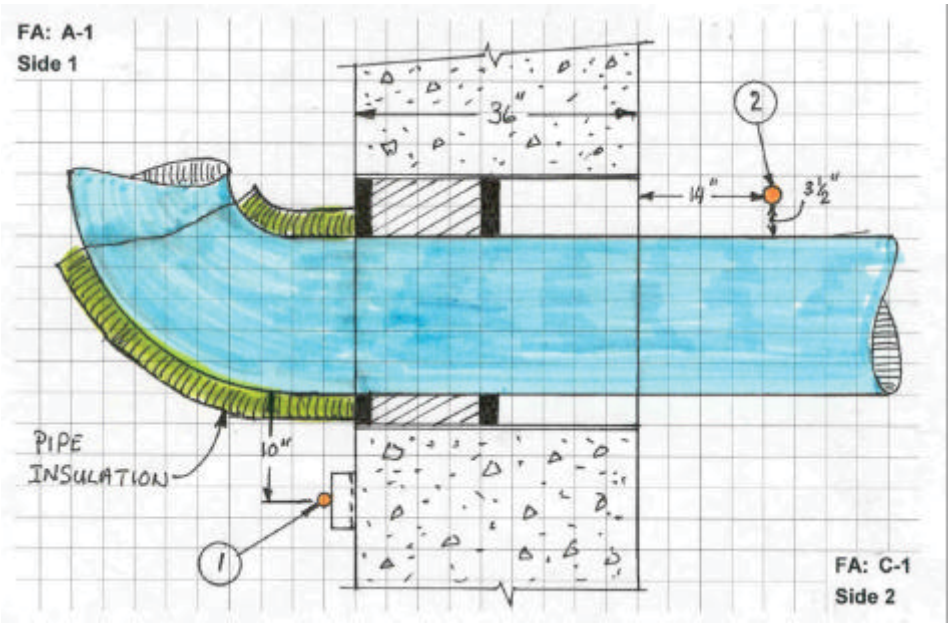

Penetration Seal Data

Appendix: B13

Penetration #: P113W0421

Penetration Type: M-1 **Fire Area (Side 1):** A-1 **Fire Area (Side 2):** A-5

Loc./Elev.: 1983'-10 **M-0X Dwg:** M-1X0360

1. **Barrier Thickness:** 12" Nominal
2. **Opening Size:** 12"D
3. **Penetrants:** (1)8"P
4. **Sealant Type:** Foam
5. **Damming Side1:** Flush
6. **Damming Side 2:** 2-1/2" Recess
7. **Damming Continuity (Acc/Rej):** Accept
8. **Boot Condition (Acc/Rej):** N/A
9. **Sealant Depth:** 7-1/2"
10. **Annular Gap (smallest):** 3/4"
11. **Gap between pen:** N/A
12. **Barrier Type:** F
13. **Opening Sleeved or Concrete:** Steel
14. **Pipe Insulated:** No

Wayne Aregood
Prepared By:

Jeff Suter
Reviewed By:

Walkdown Comments:

Sketch:

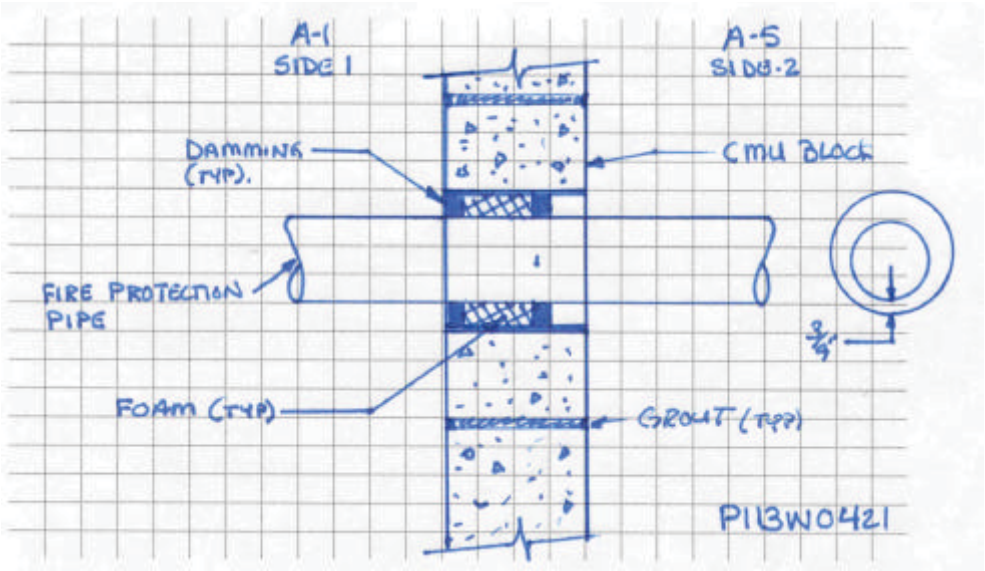

Penetration Seal Data

Appendix: B13

Photos: P113W0421

Fire Area A-1 (Side 1)

Fire Area A-1 (Side 1)

Fire Area A-5 (Side 2)

Fire Area A-5 (Side 2)

Penetration Seal Data

Appendix: B13

Penetration #: P121S0284

Penetration Type: RB-5A **Fire Area (Side 1):** A-1 **Fire Area (Side 2):** A-4

Loc./Elev.: 1988'-0" **M-0X Dwg:** M-0X1211

1. **Barrier Thickness:** 19"
2. **Opening Size:** 8"D
3. **Penetrants:** (1) 4"P
4. **Sealant Type:** HDSE/HDLE, Ceramic Fiber
5. **Damming Side1:** Boot
6. **Damming Side 2:** Boot
7. **Damming Continuity (Acc/Rej):** N/A
8. **Boot Condition (Acc/Rej):** Accept
9. **Sealant Depth:** Assumed Per Detail
10. **Annular Gap (smallest):** 2"
11. **Gap between pen:** N/A
12. **Barrier Type:** F R W
13. **Opening Sleeved or Concrete:** Steel
14. **Pipe Insulated:** No

Wayne Aregood
Prepared By:

Jeff Suter
Reviewed By:

Walkdown Comments:

Slab thickness determined from drawing C-0C1211.
Pipe is insulated in A-1 and covered with Armaflex in A-4, this is not considered insulated for the purpose of heat exposure.

Sketch:

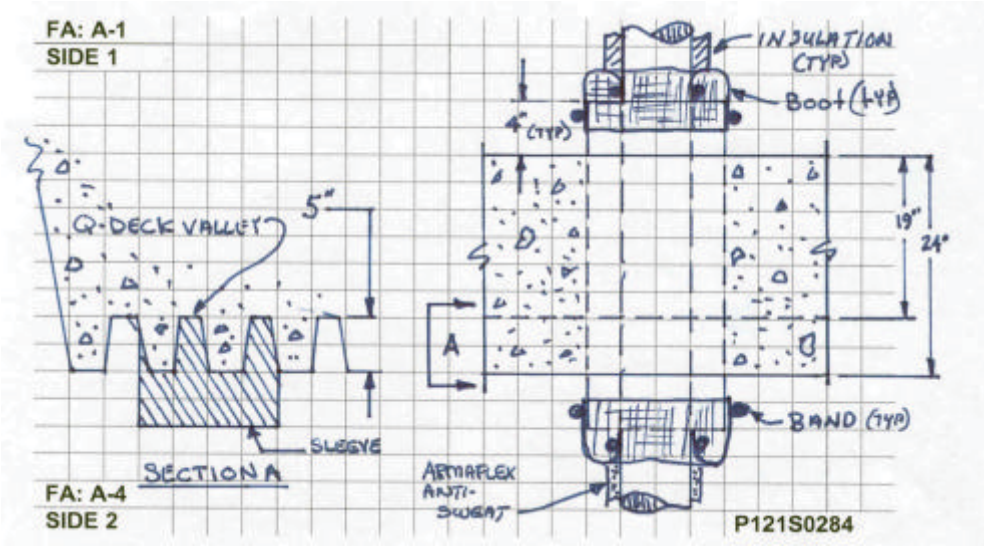

Penetration Seal Data

Appendix: B13

Photos: P121S0284

Fire Area A-1 (Side 1)

Fire Area A-1 (Side 1)

Fire Area A-4 (Side 2)

Fire Area A-4 (Side 2)

Penetration Seal Data

Appendix: B13

Heat Affected Zone Review: P121S0284

Fire Area (Side 1) A-1

No issues within Heat Affected Zone

Fire Area (Side 2) A-4

1. Armaflex on pipe.: Additional Evaluation Required.

Review Distances

(Reference M-663-00017A, Figure 7.2.3-1)

4" Pipe			
L1 & L2 Dist. (ft)	Temp. (°F)	R1 Radius (in)	R2 Radius (in)
0.5	1625	4.2	5.5
1	1374	3	4.4
1.5	1163	2.1	3.4
2	987	1.3	2.6
2.5	839	0.6	2
3	715	0.1	1.4
3.5	610	Contact	0.9
4	523		0.6
4.5	450		0.2
5	389		Contact

Side 1 Photo

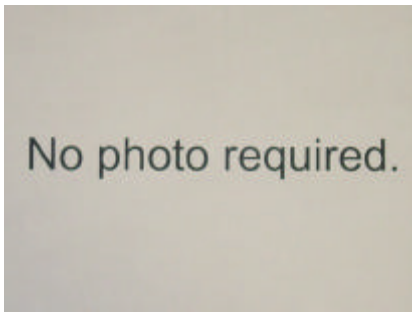

Side 2 Photo

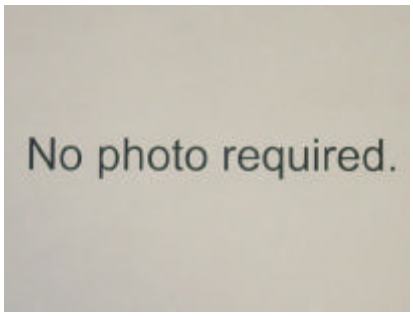

Sketch

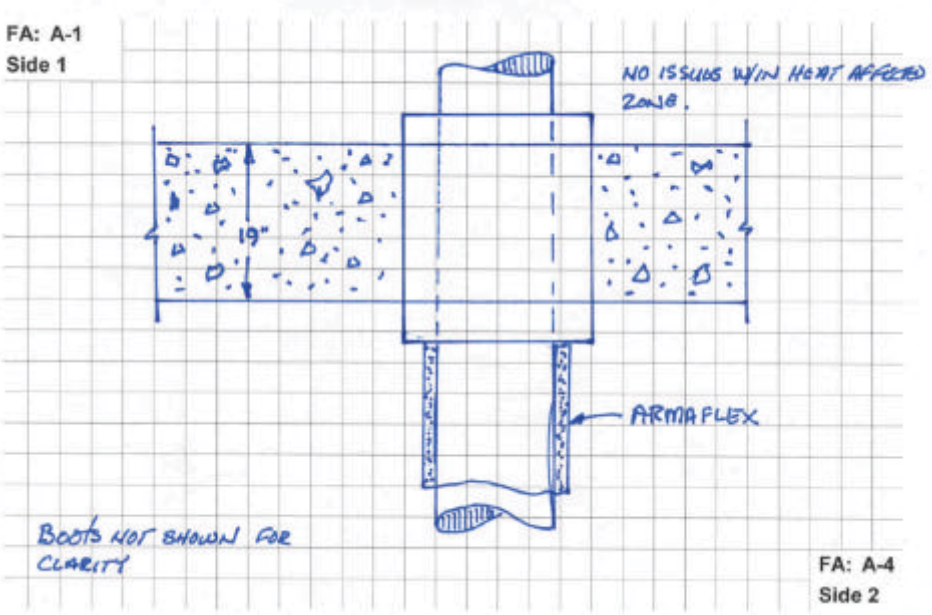

Penetration Seal Data

Appendix: B13

Penetration #: P121S0285

Penetration Type: RB-5A **Fire Area (Side 1):** A-1 **Fire Area (Side 2):** A-4

Loc./Elev.: 1988'-0" **M-0X Dwg:** M-0X1211

1. **Barrier Thickness:** 19"
2. **Opening Size:** 8"D
3. **Penetrants:** (1) 4"P
4. **Sealant Type:** HDSE/HDLE, Ceramic Fiber
5. **Damming Side1:** Boot
6. **Damming Side 2:** Boot
7. **Damming Continuity (Acc/Rej):** N/A
8. **Boot Condition (Acc/Rej):** Accept
9. **Sealant Depth:** Assumed Per Detail
10. **Annular Gap (smallest):** 1-1/2"
11. **Gap between pen:** N/A
12. **Barrier Type:** F R W
13. **Opening Sleeved or Concrete:** Steel
14. **Pipe Insulated:** No

Wayne Aregood
Prepared By:

Jeff Suter
Reviewed By:

Walkdown Comments:
Slab thickness determined from drawing C-0C1211.

Sketch:

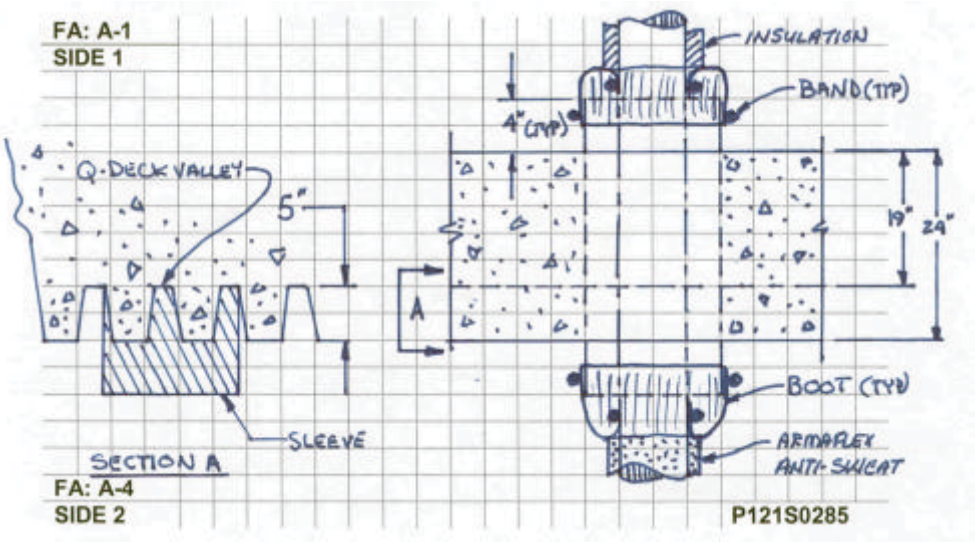

Penetration Seal Data

Appendix: B13

Photos: P121S0285

Fire Area A-1 (Side 1)

Fire Area A-1 (Side 1)

Fire Area A-4 (Side 2)

Fire Area A-4 (Side 2)

Penetration Seal Data

Appendix: B13

Heat Affected Zone Review: P121S0285

Fire Area (Side 1) A-1

No issues within Heat Affected Zone

Fire Area (Side 2) A-4

1. Armaflex on pipe: Addition evaluation Required

Review Distances

(Reference M-663-00017A, Figure 7.2.3-1)

4" Pipe			
L1 & L2 Dist. (ft)	Temp. (°F)	R1 Radius (in)	R2 Radius (in)
0.5	1625	4.2	5.5
1	1374	3	4.4
1.5	1163	2.1	3.4
2	987	1.3	2.6
2.5	839	0.6	2
3	715	0.1	1.4
3.5	610	Contact	0.9
4	523		0.6
4.5	450		0.2
5	389		Contact

Side 1 Photo

Side 2 Photo

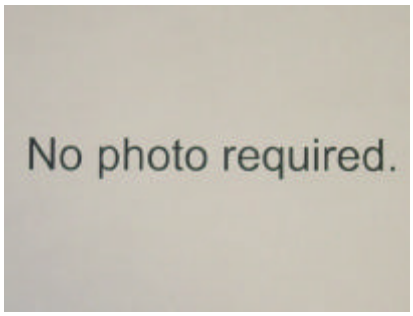

Sketch

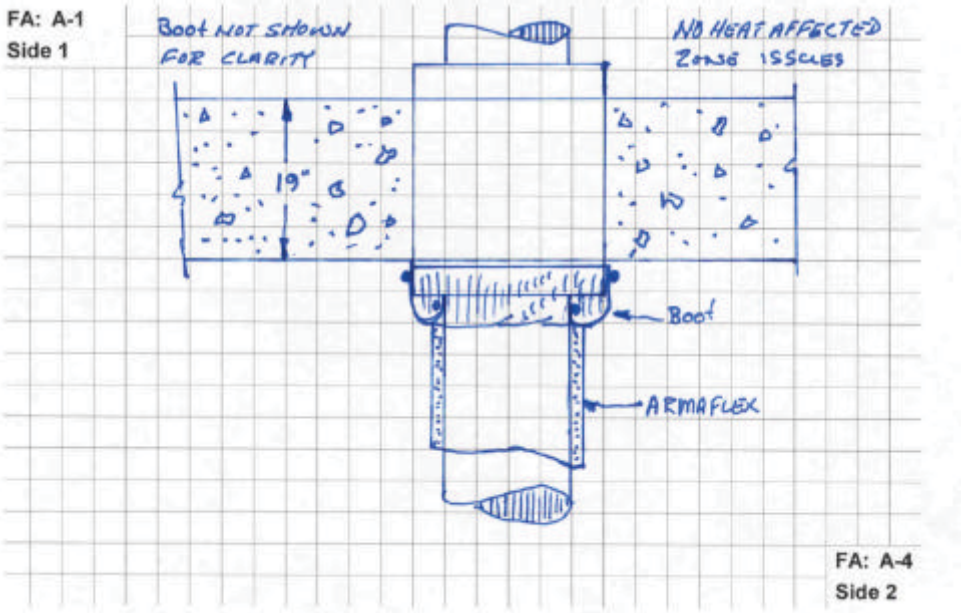

Penetration Seal Data

Appendix: B13

Penetration #: P121S0287

Penetration Type: RB-5A **Fire Area (Side 1):** A-1 **Fire Area (Side 2):** A-4

Loc./Elev.: 1988'-0" **M-0X Dwg:** M-0X1211

1. **Barrier Thickness:** 22"
2. **Opening Size:** 8"D
3. **Penetrants:** (1) 4"P
4. **Sealant Type:** HDSE/HDLE, Ceramic Fiber
5. **Damming Side1:** Boot
6. **Damming Side 2:** Boot
7. **Damming Continuity (Acc/Rej):** N/A
8. **Boot Condition (Acc/Rej):** Accept
9. **Sealant Depth:** Assumed Per Detail
10. **Annular Gap (smallest):** 1"
11. **Gap between pen:** N/A
12. **Barrier Type:** F R W
13. **Opening Sleeved or Concrete:** Steel
14. **Pipe Insulated:** Yes

Wayne Aregood
Prepared By:

Jeff Suter
Reviewed By:

Walkdown Comments:

Slab thickness determined from drawing C-0C1211.
Anti-sweat on bottom side is not considered insulation.

Sketch:

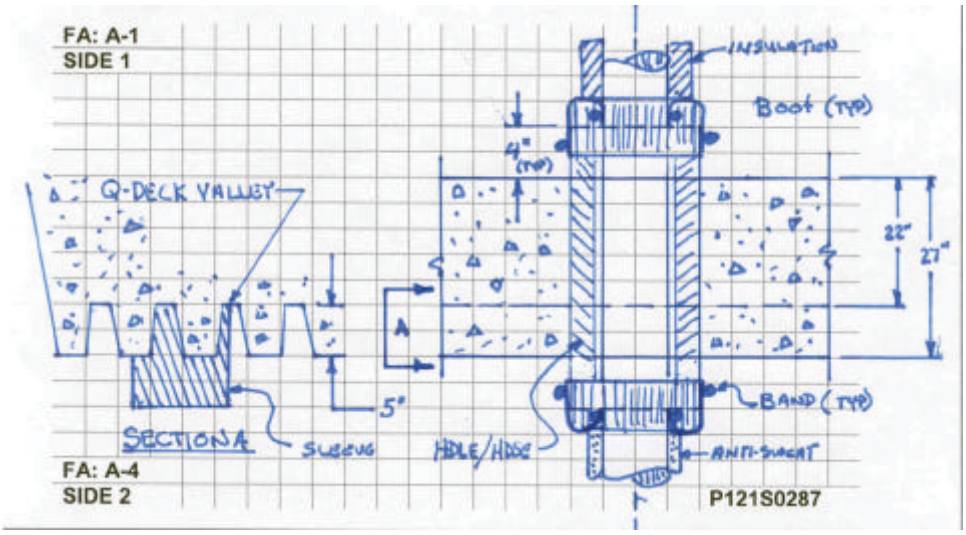

Penetration Seal Data

Appendix: B13

Photos: P121S0287

Fire Area A-1 (Side 1)

Fire Area A-1 (Side 1)

Fire Area A-4 (Side 2)

Fire Area A-4 (Side 2)

Penetration Seal Data

Appendix: B13

Heat Affected Zone Review: P121S0287

Fire Area (Side 1) A-1

No issues within Heat Affected Zone

Fire Area (Side 2) A-4

1. Armaflex on pipe.: Additional Evaluation Required
2. Unscheduled conduit (Detection), not an issue.

Review Distances

(Reference M-663-00017A, Figure 7.2.3-1)

4" Pipe			
L1 & L2 Dist. (ft)	Temp. (°F)	R1 Radius (in)	R2 Radius (in)
0.5	1625	4.2	5.5
1	1374	3	4.4
1.5	1163	2.1	3.4
2	987	1.3	2.6
2.5	839	0.6	2
3	715	0.1	1.4
3.5	610	Contact	0.9
4	523		0.6
4.5	450		0.2
5	389		Contact

Side 1 Photo

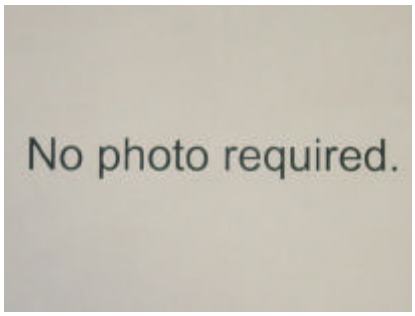

Side 2 Photo

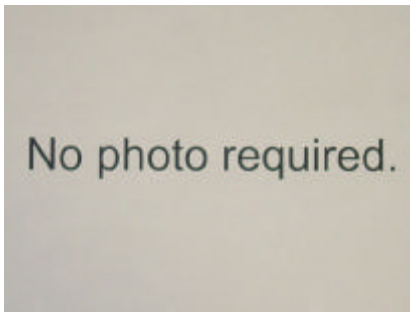

Sketch

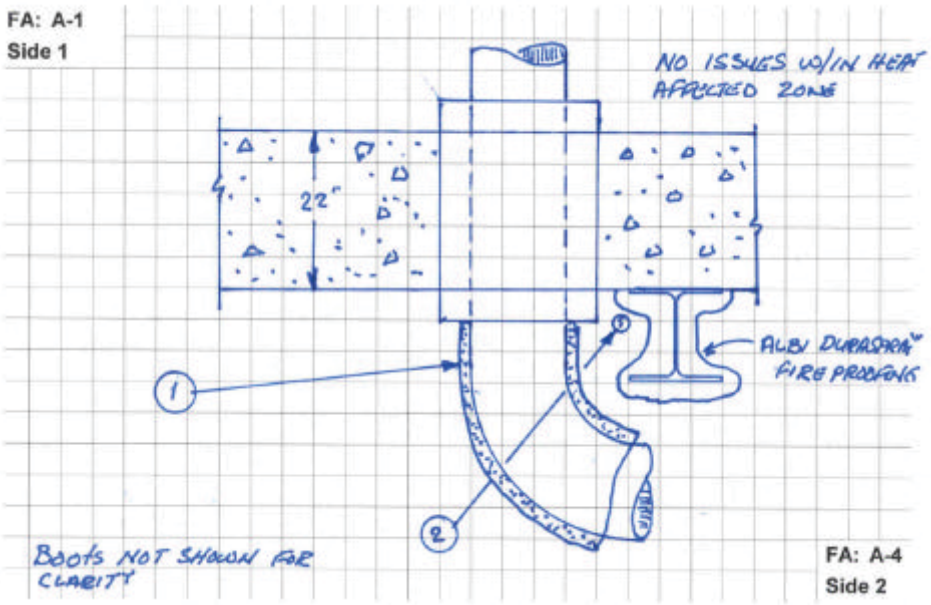

Penetration Seal Data

Appendix: B13

Penetration #: P132W1845

Penetration Type: M-6A **Fire Area (Side 1):** A-8 **Fire Area (Side 2):** A-3

Loc./Elev.: 2013'-9" **M-0X Dwg:** M-1X1918

1. **Barrier Thickness:** 12"
2. **Opening Size:** 30"D
3. **Penetrants:** (1)24"P
4. **Sealant Type:** Foam
5. **Damming Side1:** 1/4" recessed
6. **Damming Side 2:** Flush
7. **Damming Continuity (Acc/Rej):** * Accept
8. **Boot Condition (Acc/Rej):** N/A
9. **Sealant Depth:** 9-3/4"
10. **Annular Gap (smallest):** 3"
11. **Gap between pen:** N/A
12. **Barrier Type:** F
13. **Opening Sleeved or Concrete:** Steel
14. **Pipe Insulated:** No

Wayne Aregood
Prepared By:

Jeff Suter
Reviewed By:

Walkdown Comments:

Wall thickness determined by Drawing 1-C01321. * Partially exposed, acceptance applies to exposed surfaces only. Changed Detail from M-1 to M-6a based on actual seal depth.

Sketch:

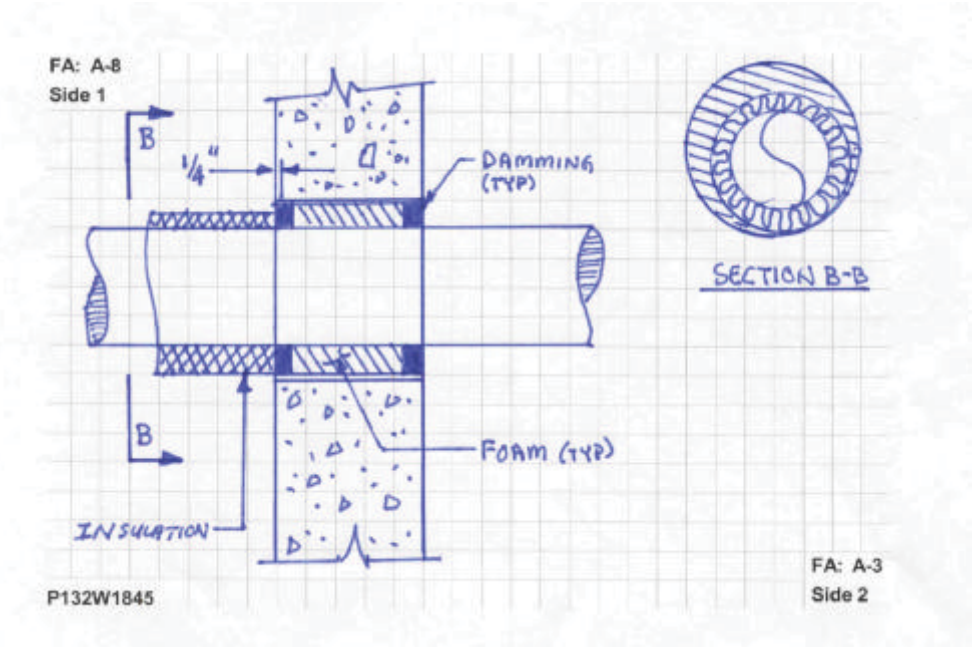

Penetration Seal Data

Appendix: B13

Photos: P132W1845

Fire Area A-8 (Side 1)

Fire Area A-8 (Side 1)

Fire Area A-3 (Side 2)

Fire Area A-3 (Side 2)

Penetration Seal Data

Appendix: B13

Heat Affected Zone Review: P132W1845

Fire Area (Side 1) A-8

No issues within Heat Affected Zone

Fire Area (Side 2) A-3

No issues within Heat Affected Zone

Review Distances

(Reference M-663-00017A, Figure 7.2.3-1)

24" Pipe			
L1 & L2 Dist. (ft)	Temp. (°F)	R1 Radius (in)	R2 Radius (in)
0.5	1763	4.8	6.1
1	1615	4.1	5.5
1.5	1480	3.5	4.9
2	1357	3	4.3
2.5	1244	2.5	3.8
3	1141	2	3.3
3.5	1048	1.6	2.9
4	962	1.2	2.5
4.5	884	0.8	2.2
5	813	0.5	1.9
5.5	748	0.2	1.6
6	689	Contact	1.3
6.5	635		1.1
7	585		0.8
7.5	540		0.6
8	499		0.4
8.5	462		0.3
9	427		0.1
9.5	396		Contact

Side 1 Photo

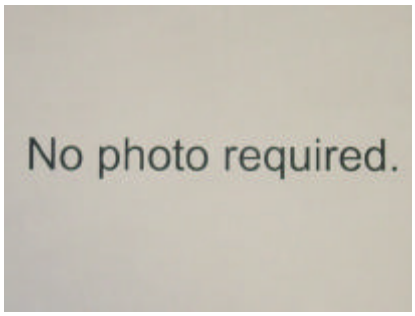

Side 2 Photo

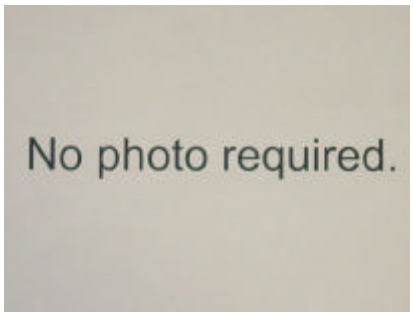

Sketch

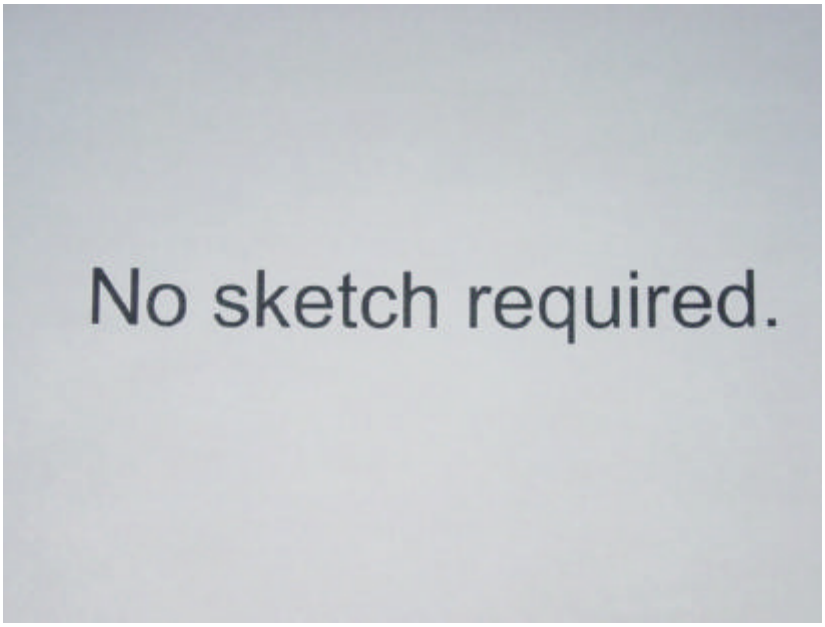

Penetration Seal Data

Appendix: B13

Penetration #: P133S0762

Penetration Type: FB-1 **Fire Area (Side 1):** A-8 **Fire Area (Side 2):** A-1

Loc./Elev.: 2000'-0" **M-0X Dwg:** M-0X1331

1. **Barrier Thickness:** 12"
2. **Opening Size:** 8"D
3. **Penetrants:** (1)2"P
4. **Sealant Type:** Ceramic Fiber
5. **Damming Side1:** N/A
6. **Damming Side 2:** N/A
7. **Damming Continuity (Acc/Rej):** N/A
8. **Boot Condition (Acc/Rej):** Accept
9. **Sealant Depth:** 14" **
10. **Annular Gap (smallest):** 3/4"
11. **Gap between pen:** N/A
12. **Barrier Type:** F
13. **Opening Sleeved or Concrete:** Steel
14. **Pipe Insulated:** Yes

Wayne Aregood
Prepared By:

Jeff Suter
Reviewed By:

Walkdown Comments:

Current Boot condition is acceptable and shows no degradation from excessive moments. There is evidence of previous repair on the top side. However, it physically appears to be quite old. Label ordered. Slab thickness determined by Drawing C-1C1311. **Sealant depth determined by inspection report.

Sketch:

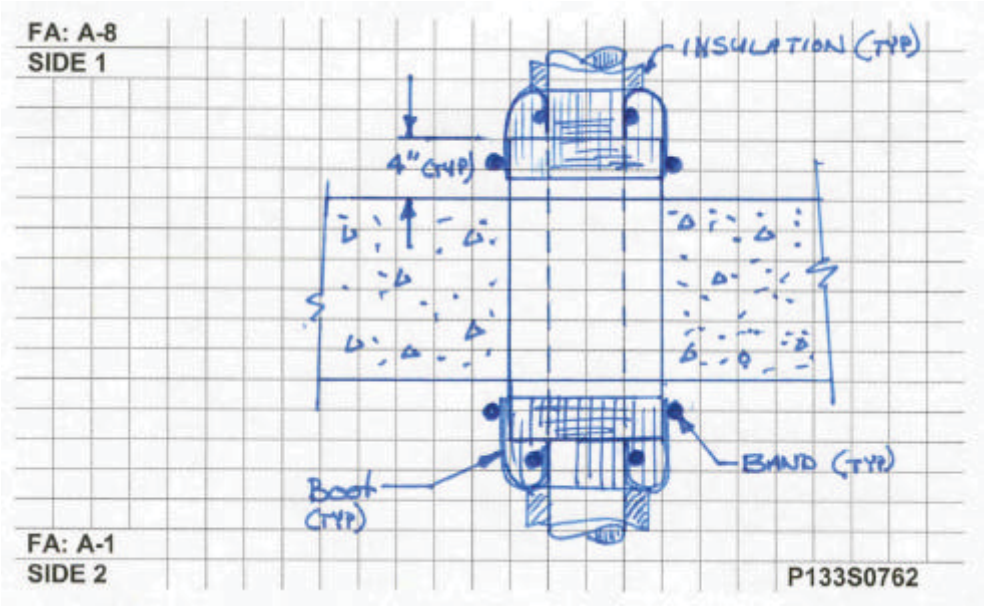

Penetration Seal Data

Appendix: B13

Photos: P133S0762

Fire Area A-8 (Side 1)

Fire Area A-8 (Side 1)

Fire Area A-1 (Side 2)

Fire Area A-1 (Side 2)

Penetration Seal Data

Appendix: B13

Penetration #: P133S0784

Penetration Type: RM-1A/A-7 **Fire Area (Side 1):** A-25 **Fire Area (Side 2):** A-1

Loc./Elev.: 2000'-0" **M-0X Dwg:** M-0X1331

1. **Barrier Thickness:** 12"
2. **Opening Size:** 20"D
3. **Penetrants:** (1) 14"P
4. **Sealant Type:** HDSE/HDLE
5. **Damming Side1:** HDLE flush w/sleeve
6. **Damming Side 2:** Boot
7. **Damming Continuity (Acc/Rej):** N/A
8. **Boot Condition (Acc/Rej):** Accept
9. **Sealant Depth:** 14-1/2"
10. **Annular Gap (smallest):** 2-1/2"
11. **Gap between pen:** N/A
12. **Barrier Type:** F R
13. **Opening Sleeved or Concrete:** Steel
14. **Pipe Insulated:** No

Wayne Aregood
Prepared By:

Jeff Suter
Reviewed By:

Walkdown Comments:

Slab thickness determined by Drawing C-1C1311. Top side HDLE flush with sleeve end. Bottom side pipe is insulated, top side has Armaflex. Slab thickness determined by Drawing C-1C1311. Sealant depth determined from inspection document and observation of seal material within sleeve.

Sketch:

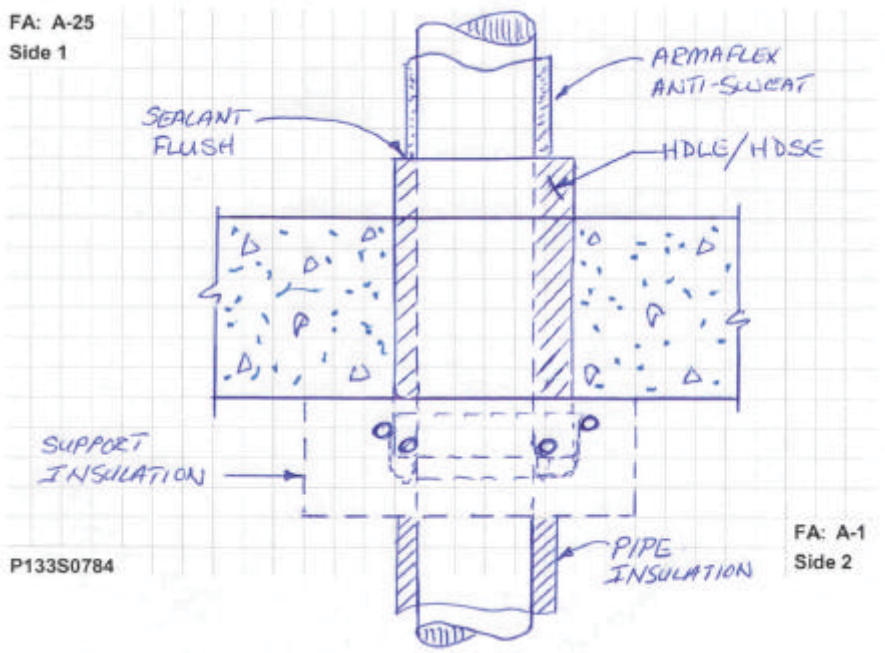

Penetration Seal Data

Appendix: B13

Photos: P133S0784

Fire Area A-25 (Side 1)

Fire Area A-25 (Side 1)

Fire Area A-1 (Side 2)

Fire Area A-1 (Side 2)

Penetration Seal Data

Appendix: B13

Heat Affected Zone Review: P133S0784

Fire Area (Side 1) A-25

1. Armaflex on pipe: Additional Evaluation Required

Fire Area (Side 2) A-1

No issues within Heat Affected Zone

Review Distances

(Reference M-663-00017A, Figure 7.2.3-1)

14" Pipe			
L1 & L2 Dist. (ft)	Temp. (°F)	R1 Radius (in)	R2 Radius (in)
0.5	1721	4.6	5.9
1	1539	3.8	5.1
1.5	1377	3	4.4
2	1233	2.4	3.8
2.5	1105	1.8	3.2
3	991	1.3	2.7
3.5	889	0.9	2.2
4	799	0.4	1.8
4.5	719	0.1	1.4
5	647	Contact	1.1
5.5	583		0.8
6	527		0.6
6.5	477		0.3
7	432		0.1
7.5	392		Contact

Side 1 Photo

No photo required.

Side 2 Photo

No photo required.

Sketch

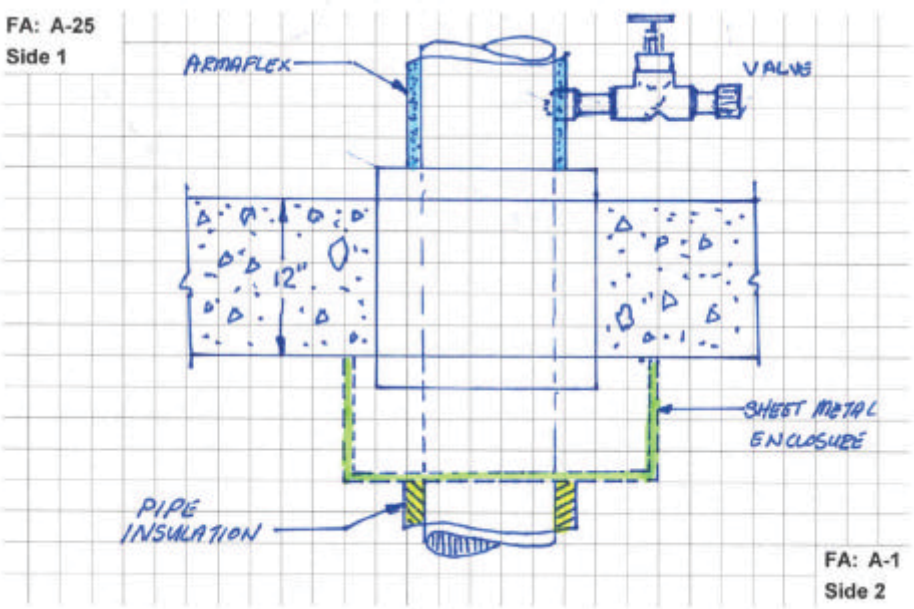

Penetration Seal Data

Appendix: B13

Penetration #: P133S0788

Penetration Type: RB-5A **Fire Area (Side 1):** A-25 **Fire Area (Side 2):** A-1

Loc./Elev.: 2000'-0" **M-0X Dwg:** M-0X1331

1. **Barrier Thickness:** 12"
2. **Opening Size:** 20"D
3. **Penetrants:** (1) 14"P
4. **Sealant Type:** HDSE/HDLE, Ceramic Fiber
5. **Damming Side1:** Boot
6. **Damming Side 2:** Boot
7. **Damming Continuity (Acc/Rej):** N/A
8. **Boot Condition (Acc/Rej):** Accept
9. **Sealant Depth:** Assumed Per Detail
10. **Annular Gap (smallest):** 1-1/2"
11. **Gap between pen:** N/A
12. **Barrier Type:** F R
13. **Opening Sleeved or Concrete:** Steel
14. **Pipe Insulated:** No **

Wayne Aregood
Prepared By:

Jeff Suter
Reviewed By:

Walkdown Comments:

Slab thickness determined by Drawing C-1C1311. ** Top side pipe is covered with Armaflex with bottom side pipe covered with insulation.

Sketch:

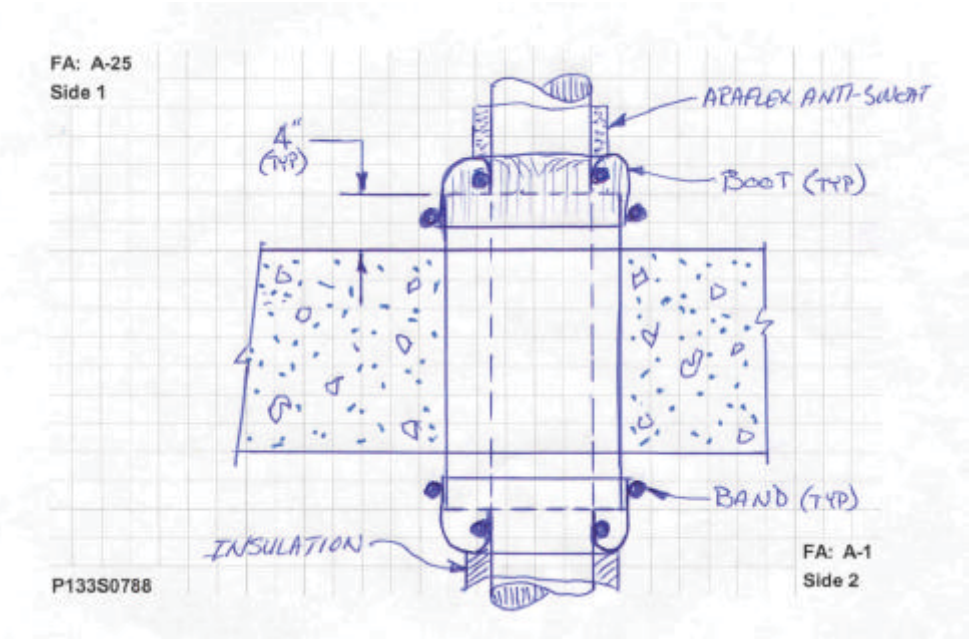

Penetration Seal Data

Appendix: B13

Photos: P133S0788

Fire Area A-25 (Side 1)

Fire Area A-25 (Side 1)

Fire Area A-1 (Side 2)

Fire Area A-1 (Side 2)

Penetration Seal Data

Appendix: B13

Heat Affected Zone Review: P133S0788

Fire Area (Side 1) A-25

1. Armaflex on pipe: Additional Evaluation Required

Fire Area (Side 2) A-1

No issues within Heat Affected Zone

Review Distances

(Reference M-663-00017A, Figure 7.2.3-1)

14" Pipe			
L1 & L2 Dist. (ft)	Temp. (°F)	R1 Radius (in)	R2 Radius (in)
0.5	1721	4.6	5.9
1	1539	3.8	5.1
1.5	1377	3	4.4
2	1233	2.4	3.8
2.5	1105	1.8	3.2
3	991	1.3	2.7
3.5	889	0.9	2.2
4	799	0.4	1.8
4.5	719	0.1	1.4
5	647	Contact	1.1
5.5	583		0.8
6	527		0.6
6.5	477		0.3
7	432		0.1
7.5	392		Contact

Side 1 Photo

No photo required.

Side 2 Photo

No photo required.

Sketch

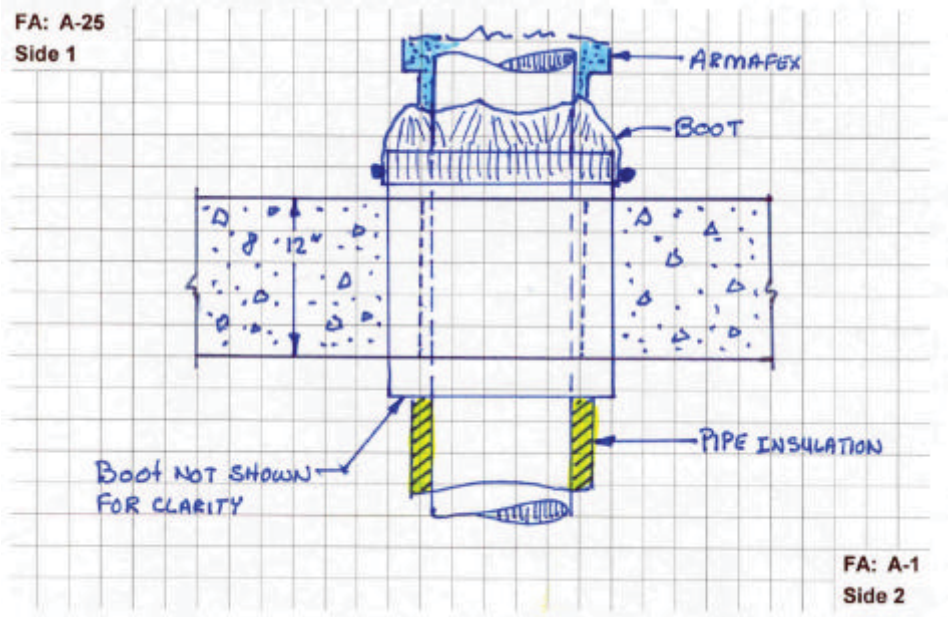

Penetration Seal Data

Appendix: B13

Penetration #: P133W2037

Penetration Type: M-1 **Fire Area (Side 1):** A-8 **Fire Area (Side 2):** A-25

Loc./Elev.: 2021'-6" **M-0X Dwg:** M-1X1921

1. **Barrier Thickness:** 36"
2. **Opening Size:** 18"D
3. **Penetrants:** (1)12"P
4. **Sealant Type:** Foam
5. **Damming Side1:** Flush with barrier plane
6. **Damming Side 2:** Recessed 26-1/2"
7. **Damming Continuity (Acc/Rej):** Accept
8. **Boot Condition (Acc/Rej):** N/A
9. **Sealant Depth:** 7-1/2"
10. **Annular Gap (smallest):** 1-1/2"
11. **Gap between pen:** N/A
12. **Barrier Type:** F W
13. **Opening Sleeved or Concrete:** Steel
14. **Pipe Insulated:** No

Jeff Suter
Prepared By:

Wayne Aregood
Reviewed By:

Walkdown Comments:

Barrier thickness determined by Drawing C-1C1331 (wsa)

Sketch:

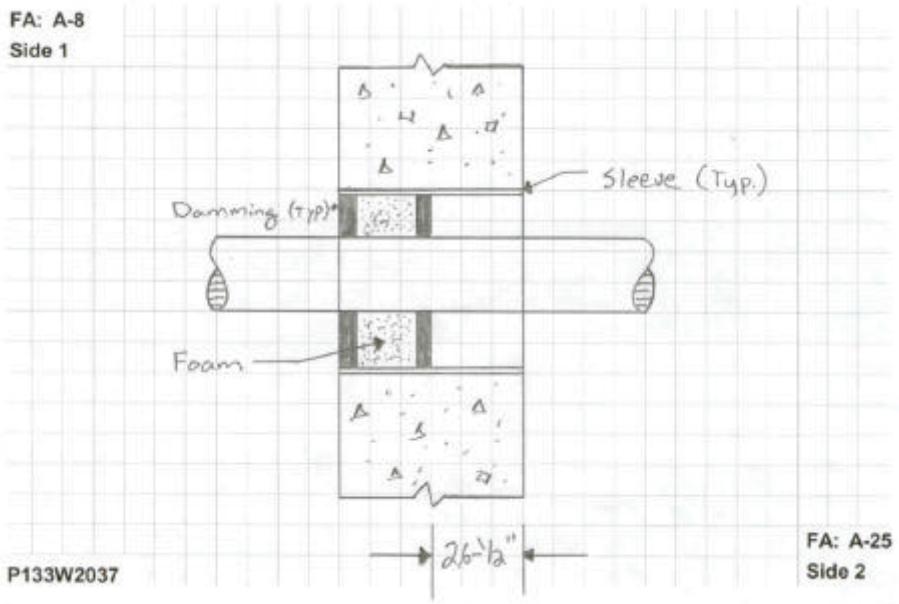

Penetration Seal Data

Appendix: B13

Photos: P133W2037

Fire Area A-8 (Side 1)

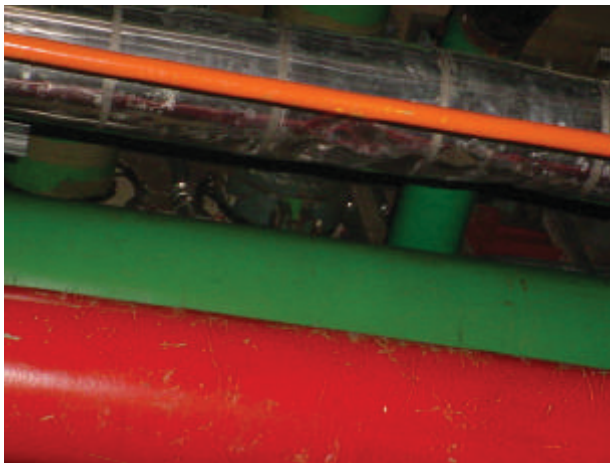

Fire Area A-8 (Side 1)

Fire Area A-25 (Side 2)

Fire Area A-25 (Side 2)

Penetration Seal Data

Appendix: B13

Heat Affected Zone Review: P133W2037

Fire Area (Side 1) A-8

1. 1" conduit (no ID) within Heat Affected Zone

Fire Area (Side 2) A-25

2. 2" Conduit (no ID) within Heat Affected Zone, routed up through ceiling and into Cont. Pene E-240.

Review Distances

(Reference M-663-00017A, Figure 7.2.3-1)

12" Pipe			
L1 & L2 Dist. (ft)	Temp. (°F)	R1 Radius (in)	R2 Radius (in)
0.5	1712	4.6	5.9
1	1524	3.7	5.1
1.5	1357	3	4.3
2	1209	2.3	3.6
2.5	1078	1.7	3.1
3	962	1.2	2.5
3.5	860	0.7	2.1
4	769	0.3	1.7
4.5	689	Contact	1.3
5	618		1
5.5	555		0.7
6	499		0.4
6.5	450		0.2
7	406		0
7.5	368		Contact

Side 1 Photo

No photo required.

Side 2 Photo

No photo required.

Sketch

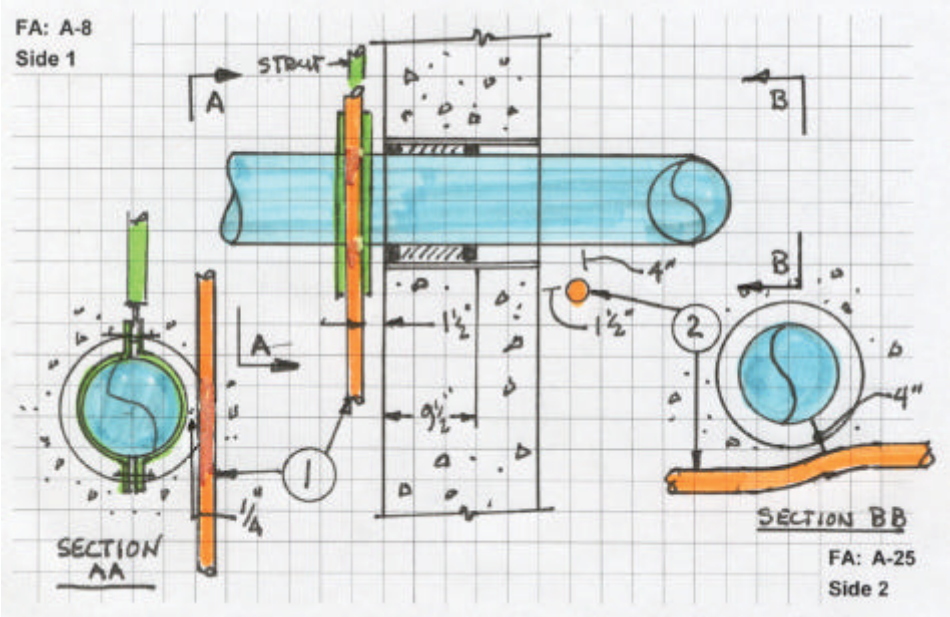

Penetration Seal Data

Appendix: B13

Penetration #: P133W2042

Penetration Type: M-1 **Fire Area (Side 1):** A-8 **Fire Area (Side 2):** A-25

Loc./Elev.: 2021'-6" **M-0X Dwg:** M-1X1921

1. **Barrier Thickness:** 36"
2. **Opening Size:** 18"D
3. **Penetrants:** (1)12"P
4. **Sealant Type:** Foam
5. **Damming Side1:** Flush with barrier plane
6. **Damming Side 2:** Recessed 26-1/2"
7. **Damming Continuity (Acc/Rej):** Accept
8. **Boot Condition (Acc/Rej):** N/A
9. **Sealant Depth:** 7-1/2"
10. **Annular Gap (smallest):** 1-1/2"
11. **Gap between pen:** N/A
12. **Barrier Type:** F W
13. **Opening Sleeved or Concrete:** Steel
14. **Pipe Insulated:** No

Jeff Suter
Prepared By:

Wayne Aregood
Reviewed By:

Walkdown Comments:

Barrier thickness determined by Drawing C-1C1331 (wsa)

Sketch:

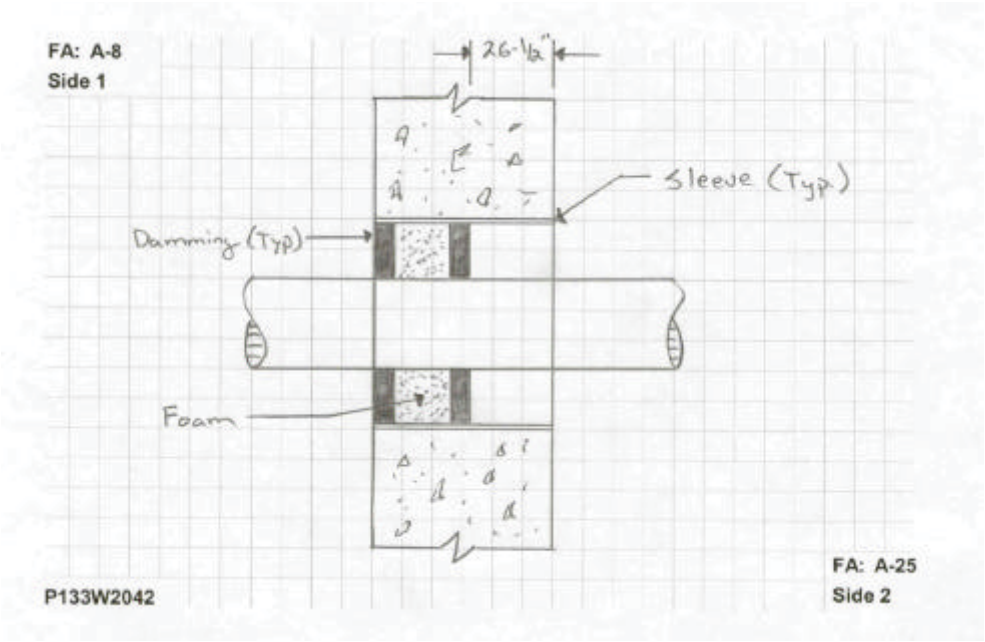

Penetration Seal Data

Appendix: B13

Photos: P133W2042

Fire Area A-8 (Side 1)

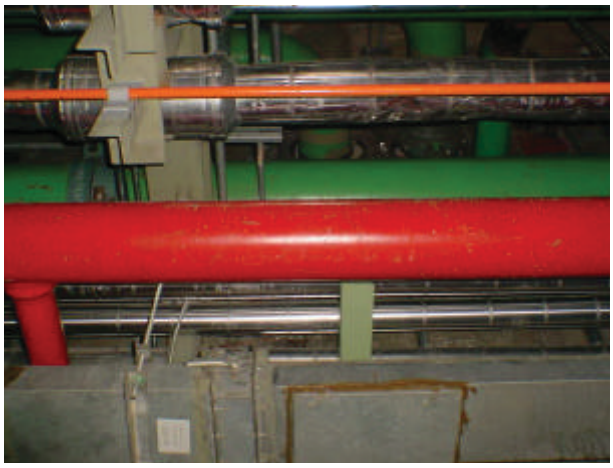

Fire Area A-8 (Side 1)

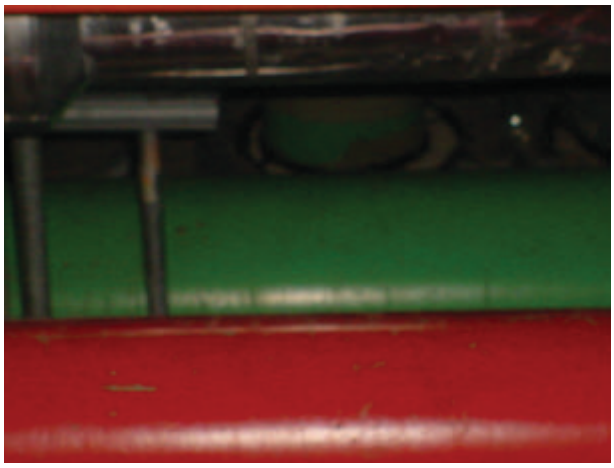

Fire Area A-25 (Side 2)

Fire Area A-25 (Side 2)

Penetration Seal Data

Appendix: B13

Heat Affected Zone Review: P133W2042

Fire Area (Side 1) A-8

1. 2" Conduit 1U1096 within Heat Affected Zone. Further review determined that this raceway is not PFSSD. Set-route control is necessary.

Fire Area (Side 2) A-25

2. Unscheduled 2" Conduit within Heat Affected Zone

Review Distances

(Reference M-663-00017A, Figure 7.2.3-1)

12" Pipe			
L1 & L2 Dist. (ft)	Temp. (°F)	R1 Radius (in)	R2 Radius (in)
0.5	1712	4.6	5.9
1	1524	3.7	5.1
1.5	1357	3	4.3
2	1209	2.3	3.6
2.5	1078	1.7	3.1
3	962	1.2	2.5
3.5	860	0.7	2.1
4	769	0.3	1.7
4.5	689	Contact	1.3
5	618		1
5.5	555		0.7
6	499		0.4
6.5	450		0.2
7	406		0
7.5	368		Contact

Side 1 Photo

No photo required.

Side 2 Photo

No photo required.

Sketch

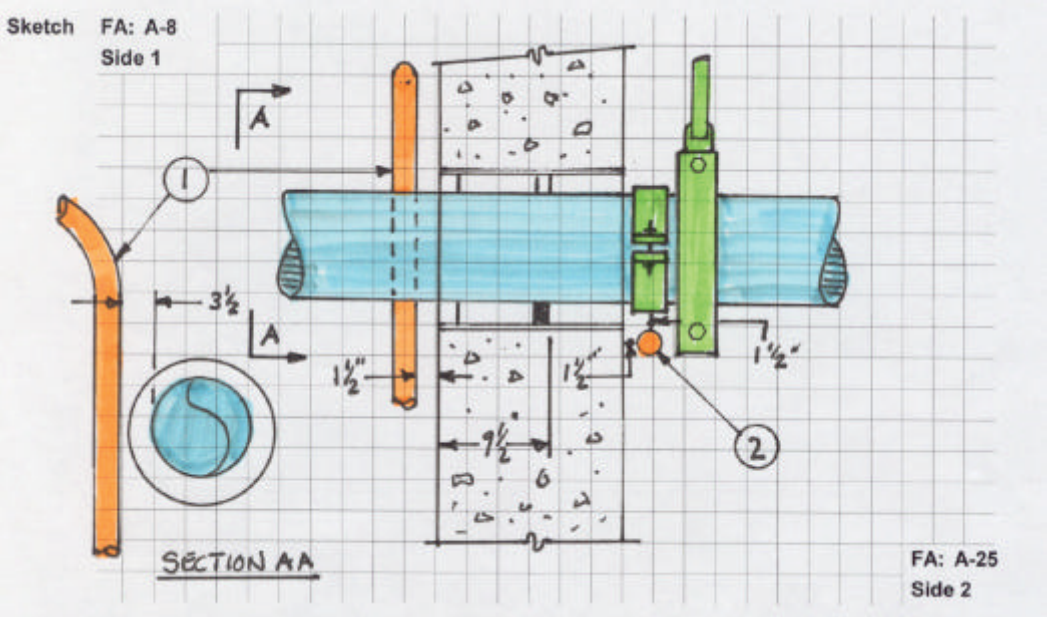

Penetration Seal Data

Appendix: B13

Penetration #: P134S0877

Penetration Type: RB-5A **Fire Area (Side 1):** A-24 **Fire Area (Side 2):** A-1

Loc./Elev.: 2000'-0" **M-0X Dwg:** M-1X1341

1. **Barrier Thickness:** 12"
2. **Opening Size:** 20"D
3. **Penetrants:** (1) 14"P
4. **Sealant Type:** HDSE/HDLE, Ceramic Fiber
5. **Damming Side1:** Boot
6. **Damming Side 2:** Boot
7. **Damming Continuity (Acc/Rej):** N/A
8. **Boot Condition (Acc/Rej):** Accept
9. **Sealant Depth:** 14" **
10. **Annular Gap (smallest):** 2"
11. **Gap between pen:** N/A
12. **Barrier Type:** F R
13. **Opening Sleeved or Concrete:** Steel
14. **Pipe Insulated:** * No

Wayne Aregood
Prepared By:

Jeff Suter
Reviewed By:

Walkdown Comments:

Slab thickness based on drawing C-1C1311. * Pipe deemed not insulated due to topside pipe has Armaflex, no insulation. ** Sealant depth determined by inspection report.

Sketch:

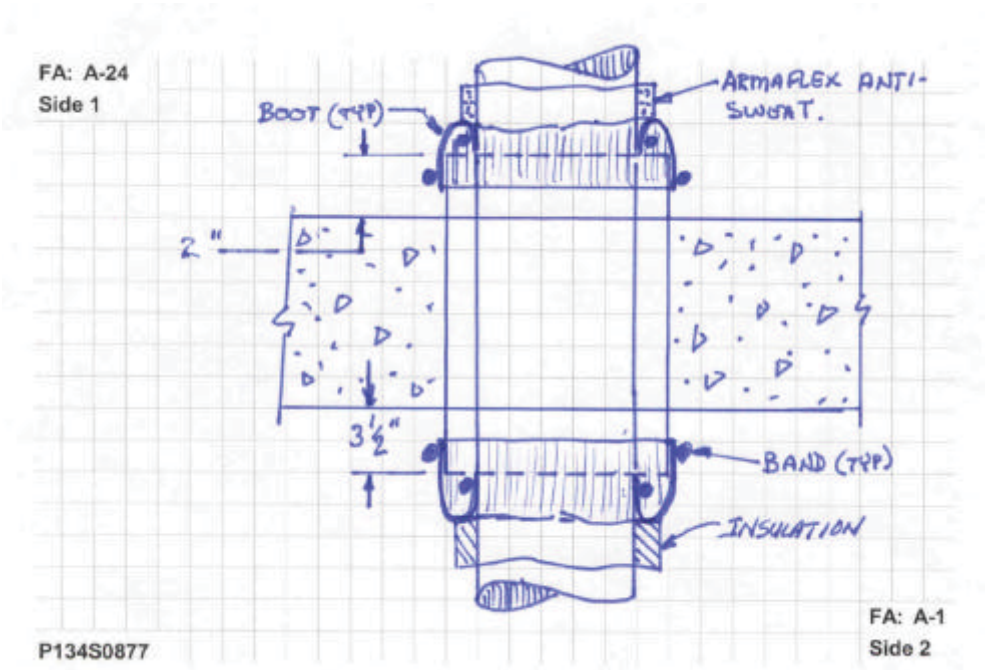

Penetration Seal Data

Appendix: B13

Photos: P134S0877

Fire Area A-24 (Side 1)

Fire Area A-24 (Side 1)

Fire Area A-1 (Side 2)

Fire Area A-1 (Side 2)

Penetration Seal Data

Appendix: B13

Heat Affected Zone Review: P134S0877

Fire Area (Side 1) A-24

1. Armaflex on pipe.

Fire Area (Side 2) A-1

No issues within Heat Affected Zone.

Review Distances

(Reference M-663-00017A, Figure 7.2.3-1)

14" Pipe			
L1 & L2 Dist. (ft)	Temp. (°F)	R1 Radius (in)	R2 Radius (in)
0.5	1721	4.6	5.9
1	1539	3.8	5.1
1.5	1377	3	4.4
2	1233	2.4	3.8
2.5	1105	1.8	3.2
3	991	1.3	2.7
3.5	889	0.9	2.2
4	799	0.4	1.8
4.5	719	0.1	1.4
5	647	Contact	1.1
5.5	583		0.8
6	527		0.6
6.5	477		0.3
7	432		0.1
7.5	392		Contact

Side 1 Photo

No photo required.

Side 2 Photo

No photo required.

Sketch

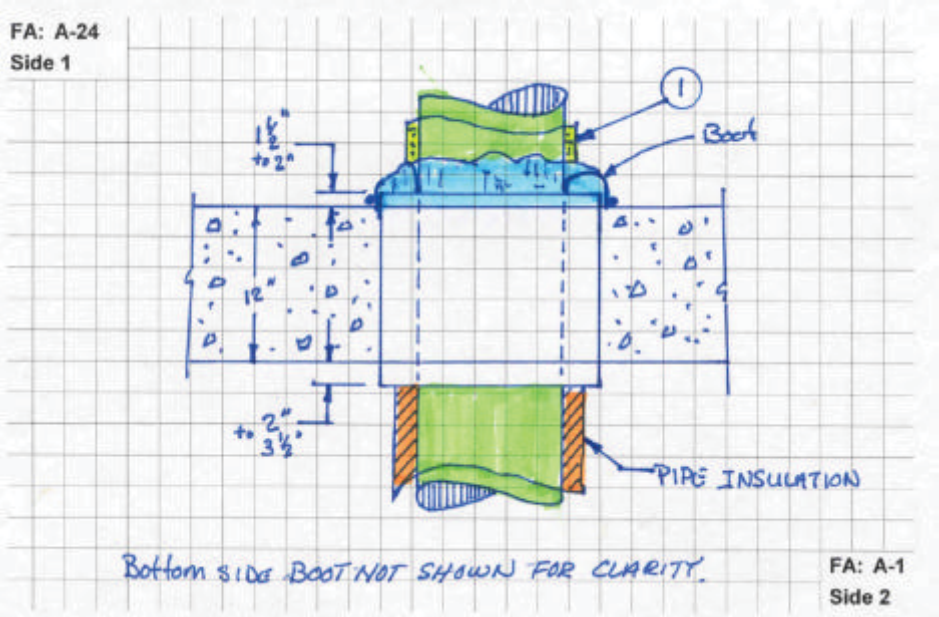

Penetration Seal Data

Appendix: B13

Penetration #: P134W2054

Penetration Type: M-1 **Fire Area (Side 1):** A-8 **Fire Area (Side 2):** A-24

Loc./Elev.: 2012'-3" **M-0X Dwg:** M-1X1921

1. **Barrier Thickness:** 36"
2. **Opening Size:** 18"D
3. **Penetrants:** (1)12"P
4. **Sealant Type:** Foam
5. **Damming Side1:** Recessed 26-1/2"
6. **Damming Side 2:** Flush with barrier
7. **Damming Continuity (Acc/Rej):** Accept
8. **Boot Condition (Acc/Rej):** N/A
9. **Sealant Depth:** 8-1/2"
10. **Annular Gap (smallest):** 2"
11. **Gap between pen:** N/A
12. **Barrier Type:** F W
13. **Opening Sleeved or Concrete:** Steel
14. **Pipe Insulated:** No

Jeff Suter
Prepared By:

Wayne Aregood
Reviewed By:

Walkdown Comments:

Barrier thickness determined by Drawing C-0C1341 (wsa)

Sketch:

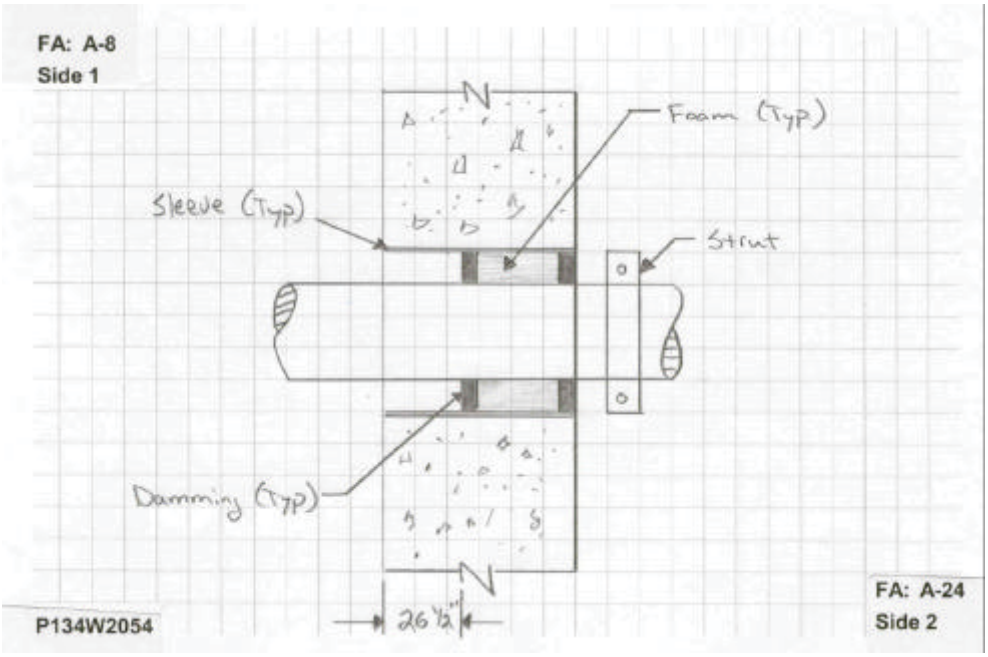

Penetration Seal Data

Appendix: B13

Photos: P134W2054

Fire Area A-8 (Side 1)

Fire Area A-8 (Side 1)

Fire Area A-24 (Side 2)

Fire Area A-24 (Side 2)

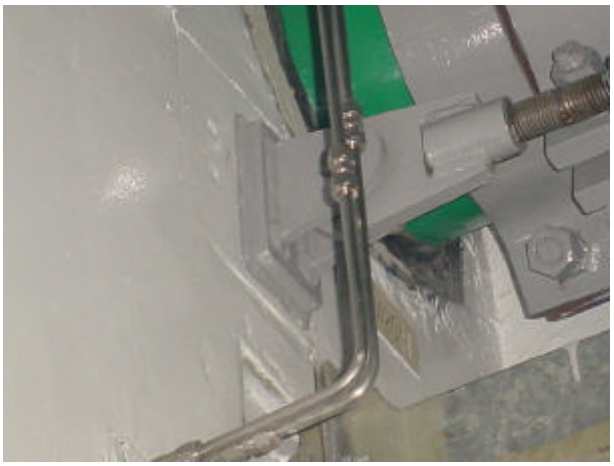

Penetration Seal Data

Appendix: B13

Heat Affected Zone Review: P134W2054

Fire Area (Side 1) A-8

1. 3/4" CMT Lighting Conduit (to Panel QA08): Not within Heat Affected Zone.
2. 24" Cable Tray 5A3C01: Not within Heat Affected Zone.

Fire Area (Side 2) A-24

No issues within Heat Affected Zone

Review Distances

(Reference M-663-00017A, Figure 7.2.3-1)

12" Pipe			
L1 & L2 Dist. (ft)	Temp. (°F)	R1 Radius (in)	R2 Radius (in)
0.5	1712	4.6	5.9
1	1524	3.7	5.1
1.5	1357	3	4.3
2	1209	2.3	3.6
2.5	1078	1.7	3.1
3	962	1.2	2.5
3.5	860	0.7	2.1
4	769	0.3	1.7
4.5	689	Contact	1.3
5	618		1
5.5	555		0.7
6	499		0.4
6.5	450		0.2
7	406		0
7.5	368		Contact

Side 1 Photo

No photo required.

Side 2 Photo

No photo required.

Sketch

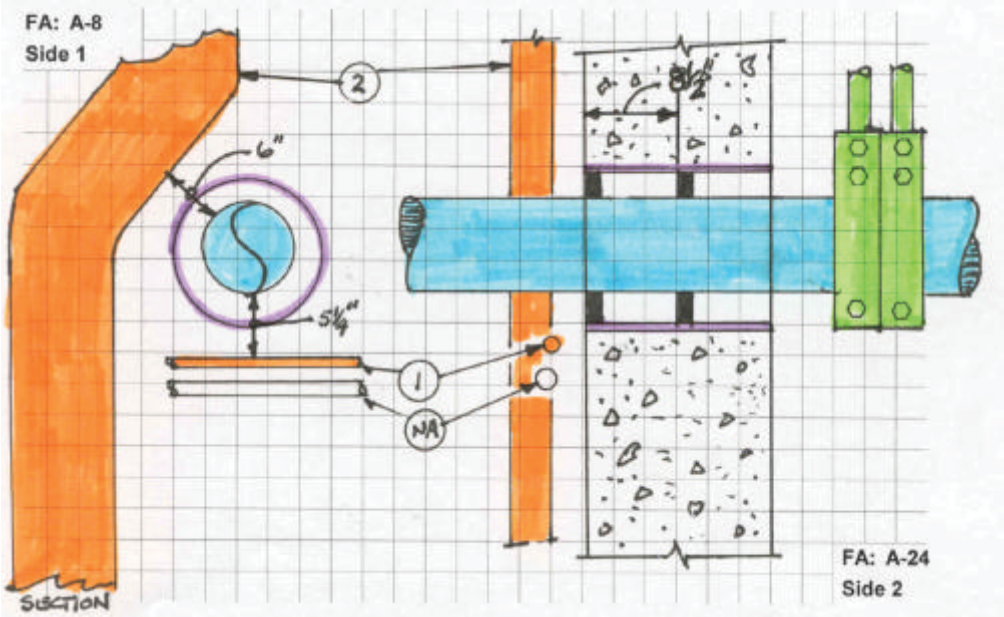

Penetration Seal Data

Appendix: B13

Penetration #: P141S1015

Penetration Type: M-6A **Fire Area (Side 1):** A-16 **Fire Area (Side 2):** A-8

Loc./Elev.: 2026'-0" **M-0X Dwg:** M-1X1411

1. **Barrier Thickness:** 20"
2. **Opening Size:** 30"D
3. **Penetrants:** (1)24"P
4. **Sealant Type:** Foam
5. **Damming Side1:** N/A
6. **Damming Side 2:** Recessed 10"
7. **Damming Continuity (Acc/Rej):** Accept
8. **Boot Condition (Acc/Rej):** N/A
9. **Sealant Depth:** 9", Reject
10. **Annular Gap (smallest):** 13/16"
11. **Gap between pen:** N/A
12. **Barrier Type:** F
13. **Opening Sleeved or Concrete:** Steel
14. **Pipe Insulated:** No

Jeff Suter
Prepared By:

Wayne Aregood
Reviewed By:

Walkdown Comments:

Slab thickness based on C-0C1411. 1/8" separation of foam at sleeve south end due to pipe movement. Recessed depth on bottom side is based on inspection from the floor. Detail changed to M-6A based on field inspection.

Sketch:

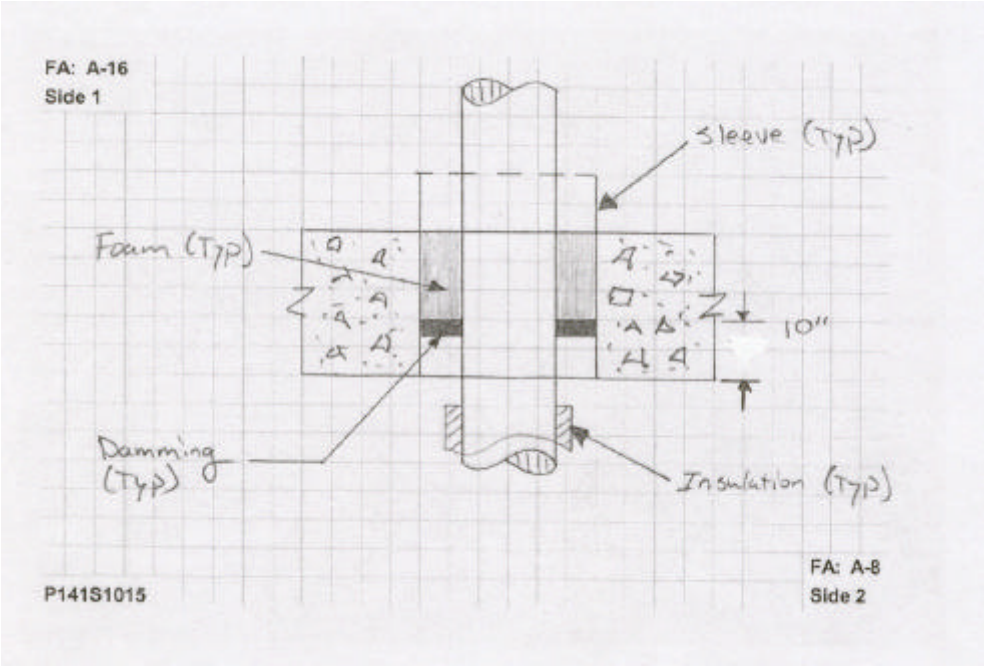

Penetration Seal Data

Appendix: B13

Photos: P141S1015

Fire Area A-16 (Side 1)

Fire Area A-16 (Side 1)

Fire Area A-8 (Side 2)

Fire Area A-8 (Side 2)

Penetration Seal Data

Appendix: B13

Heat Affected Zone Review: P141S1015

Fire Area (Side 1) A-16

1. 4" Pipe with Armaflex insulation
2. 4" Pipe with Armaflex insulation

Fire Area (Side 2) A-8

No issues within Heat Affected Zone.

Review Distances

(Reference M-663-00017A, Figure 7.2.3-1)

24" Pipe			
L1 & L2 Dist. (ft)	Temp. (°F)	R1 Radius (in)	R2 Radius (in)
0.5	1763	4.8	6.1
1	1615	4.1	5.5
1.5	1480	3.5	4.9
2	1357	3	4.3
2.5	1244	2.5	3.8
3	1141	2	3.3
3.5	1048	1.6	2.9
4	962	1.2	2.5
4.5	884	0.8	2.2
5	813	0.5	1.9
5.5	748	0.2	1.6
6	689	Contact	1.3
6.5	635		1.1
7	585		0.8
7.5	540		0.6
8	499		0.4
8.5	462		0.3
9	427		0.1
9.5	396		Contact

Side 1 Photo

No photo required.

Side 2 Photo

No photo required.

Sketch

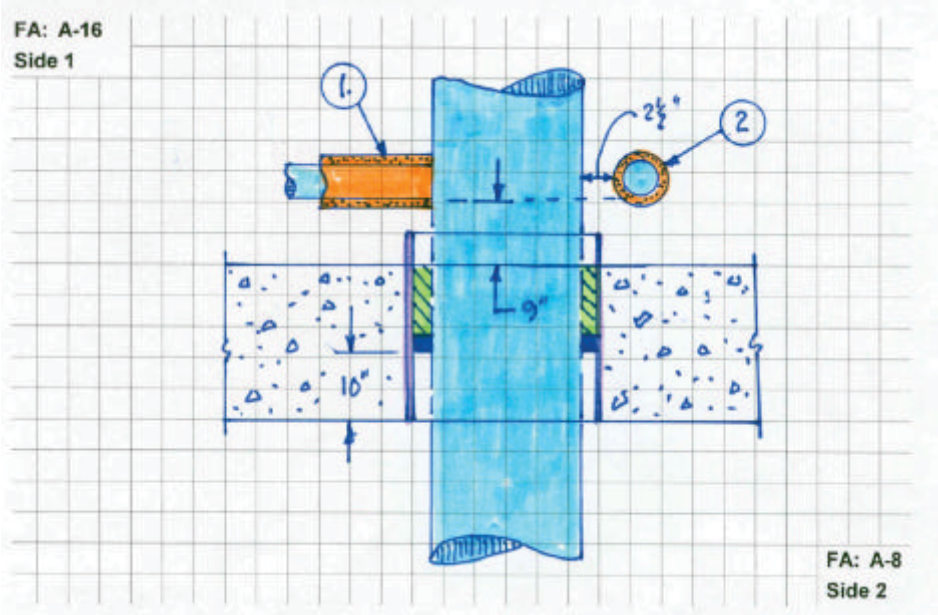

Penetration Seal Data

Appendix: B13

Penetration #: P141S1023

Penetration Type: M-6A **Fire Area (Side 1):** A-16 **Fire Area (Side 2):** A-8

Loc./Elev.: 2026'-0" **M-0X Dwg:** M-1X1411

1. **Barrier Thickness:** 12"
2. **Opening Size:** 24"D
3. **Penetrants:** (1)18"P
4. **Sealant Type:** Foam
5. **Damming Side1:** N/A
6. **Damming Side 2:** Flush with barrier
7. **Damming Continuity (Acc/Rej):** Accept
8. **Boot Condition (Acc/Rej):** N/A
9. **Sealant Depth:** 12"
10. **Annular Gap (smallest):** 1-5/16
11. **Gap between pen:** N/A
12. **Barrier Type:** F
13. **Opening Sleeved or Concrete:** Steel
14. **Pipe Insulated:** No

Jeff Suter
Prepared By:

Wayne Aregood
Reviewed By:

Walkdown Comments:

Slab thickness based on C-0C1411. Detail changed to M-6A.

Sketch:

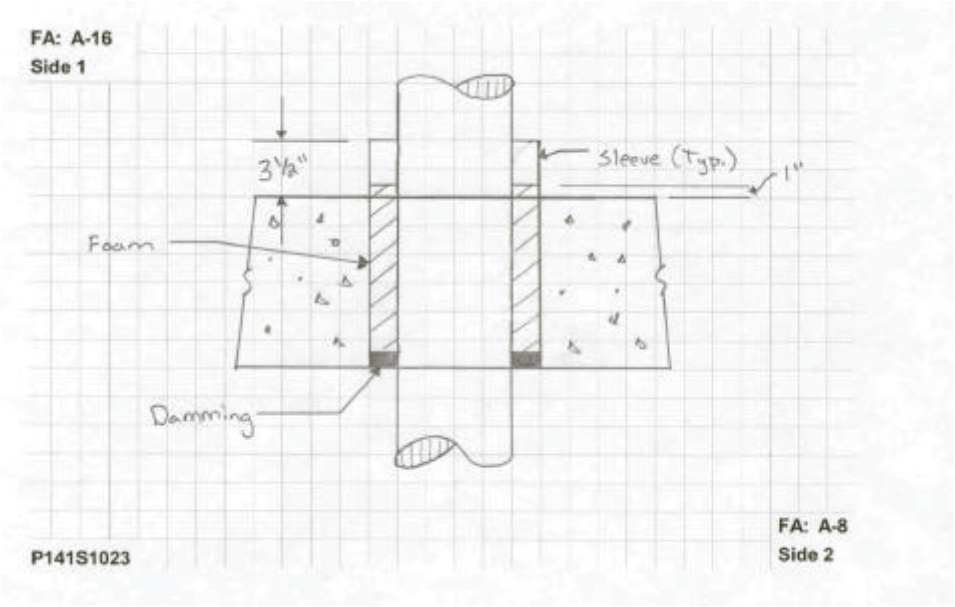

Penetration Seal Data

Appendix: B13

Photos: P141S1023

Fire Area A-16 (Side 1)

Fire Area A-16 (Side 1)

Fire Area A-8 (Side 2)

Fire Area A-8 (Side 2)

Penetration Seal Data

Appendix: B13

Heat Affected Zone Review: P141S1023

Fire Area (Side 1) A-16

No issues within Heat Affected Zone.

Fire Area (Side 2) A-8

No issues within Heat Affected Zone.

Review Distances

(Reference M-663-00017A, Figure 7.2.3-1)

18" Pipe			
L1 & L2 Dist. (ft)	Temp. (°F)	R1 Radius (in)	R2 Radius (in)
0.5	1741	4.7	6
1	1576	3.9	5.3
1.5	1426	3.3	4.6
2	1292	2.7	4
2.5	1171	2.1	3.5
3	1062	1.6	3
3.5	964	1.2	2.5
4	875	0.8	2.1
4.5	795	0.4	1.8
5	724	0.1	1.5
5.5	659	Contact	1.2
6	600		0.9
6.5	548		0.7
7	501		0.5
7.5	458		0.3
8	419		0.1
8.5	385		Contact

Side 1 Photo

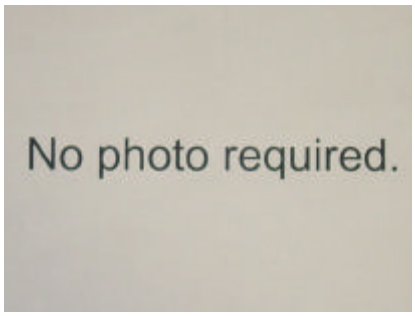

Side 2 Photo

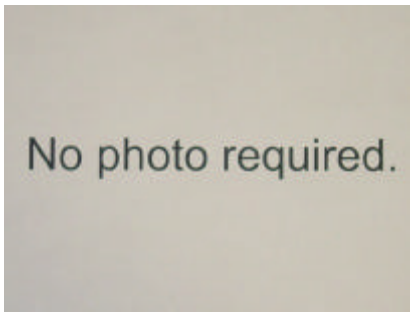

Sketch

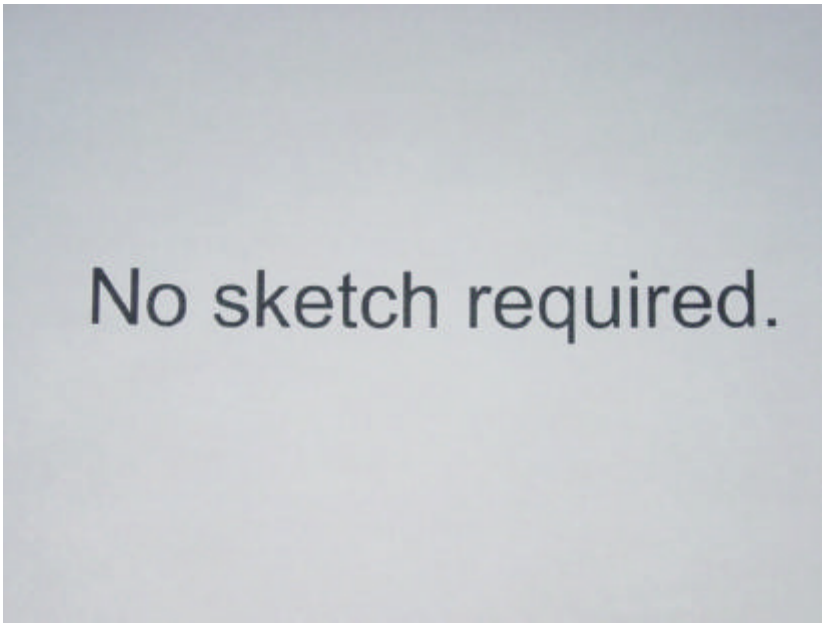

Penetration Seal Data

Appendix: B13

Penetration #: P141W1907

Penetration Type: M-1 **Fire Area (Side 1):** A-16 **Fire Area (Side 2):** A-26

Loc./Elev.: 2041'-6" **M-0X Dwg:** M-1X1919

1. **Barrier Thickness:** 12"
2. **Opening Size:** 18"D
3. **Penetrants:** (1)12"P
4. **Sealant Type:** Foam
5. **Damming Side1:** Flush with barrier plane
6. **Damming Side 2:** Recessed 2"
7. **Damming Continuity (Acc/Rej):** Accept
8. **Boot Condition (Acc/Rej):** N/A
9. **Sealant Depth:** 8"
10. **Annular Gap (smallest):** 1"
11. **Gap between pen:** N/A
12. **Barrier Type:** F
13. **Opening Sleeved or Concrete:** Steel
14. **Pipe Insulated:** No

Jeff Suter
Prepared By:

Wayne Aregood
Reviewed By:

Walkdown Comments:

Sketch:

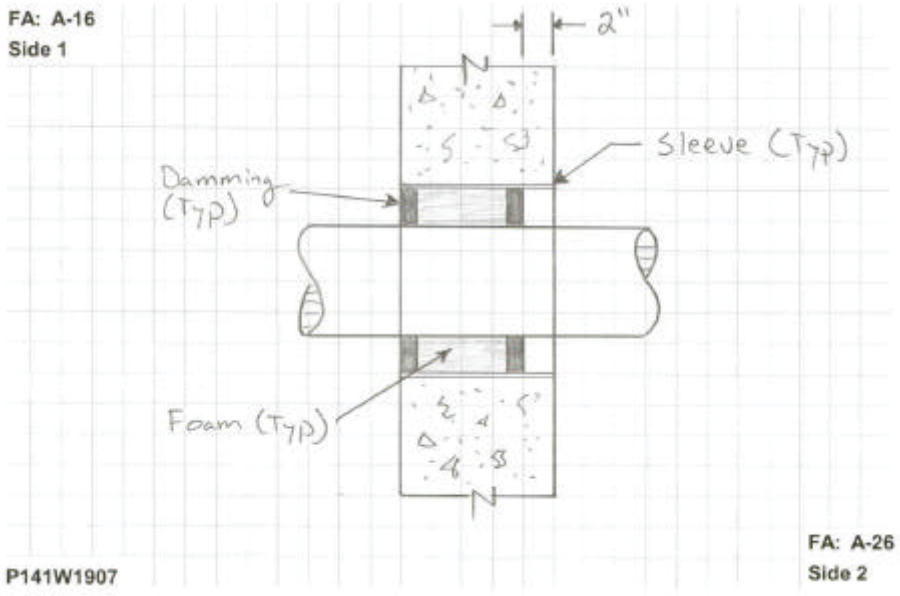

Penetration Seal Data

Appendix: B13

Photos: P141W1907

Fire Area A-16 (Side 1)

Fire Area A-16 (Side 1)

Fire Area A-26 (Side 2)

Fire Area A-26 (Side 2)

Penetration Seal Data

Appendix: B13

Heat Affected Zone Review: P141W1907

Fire Area (Side 1) A-16

No issues within Heat Affected Zone

Fire Area (Side 2) A-26

No issues within Heat Affected Zone

Review Distances

(Reference M-663-00017A, Figure 7.2.3-1)

12" Pipe			
L1 & L2 Dist. (ft)	Temp. (°F)	R1 Radius (in)	R2 Radius (in)
0.5	1712	4.6	5.9
1	1524	3.7	5.1
1.5	1357	3	4.3
2	1209	2.3	3.6
2.5	1078	1.7	3.1
3	962	1.2	2.5
3.5	860	0.7	2.1
4	769	0.3	1.7
4.5	689	Contact	1.3
5	618		1
5.5	555		0.7
6	499		0.4
6.5	450		0.2
7	406		0
7.5	368		Contact

Side 1 Photo

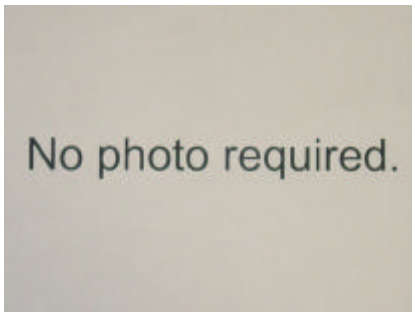

Side 2 Photo

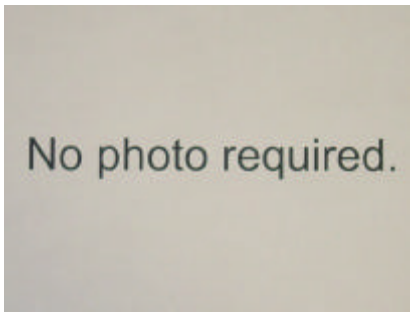

Sketch

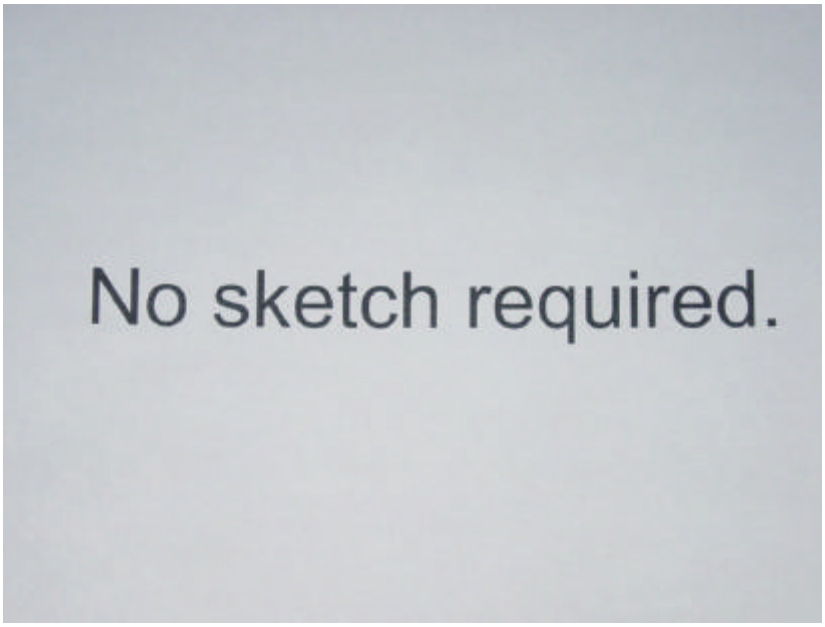

Penetration Seal Data

Appendix: B13

Penetration #: P141W1908

Penetration Type: M-1 **Fire Area (Side 1):** A-16 **Fire Area (Side 2):** A-26

Loc./Elev.: 2041'-6" **M-0X Dwg:** M-1X1919

1. **Barrier Thickness:** 12"
2. **Opening Size:** 18"D
3. **Penetrants:** (1)12"P
4. **Sealant Type:** Foam
5. **Damming Side1:** Flush
6. **Damming Side 2:** Recessed 3"
7. **Damming Continuity (Acc/Rej):** Accept
8. **Boot Condition (Acc/Rej):** N/A
9. **Sealant Depth:** 7"
10. **Annular Gap (smallest):** 1-1/2"
11. **Gap between pen:** N/A
12. **Barrier Type:** F
13. **Opening Sleeved or Concrete:** Steel
14. **Pipe Insulated:** No

Jeff Suter
Prepared By:

Wayne Aregood
Reviewed By:

Walkdown Comments:

Sketch:

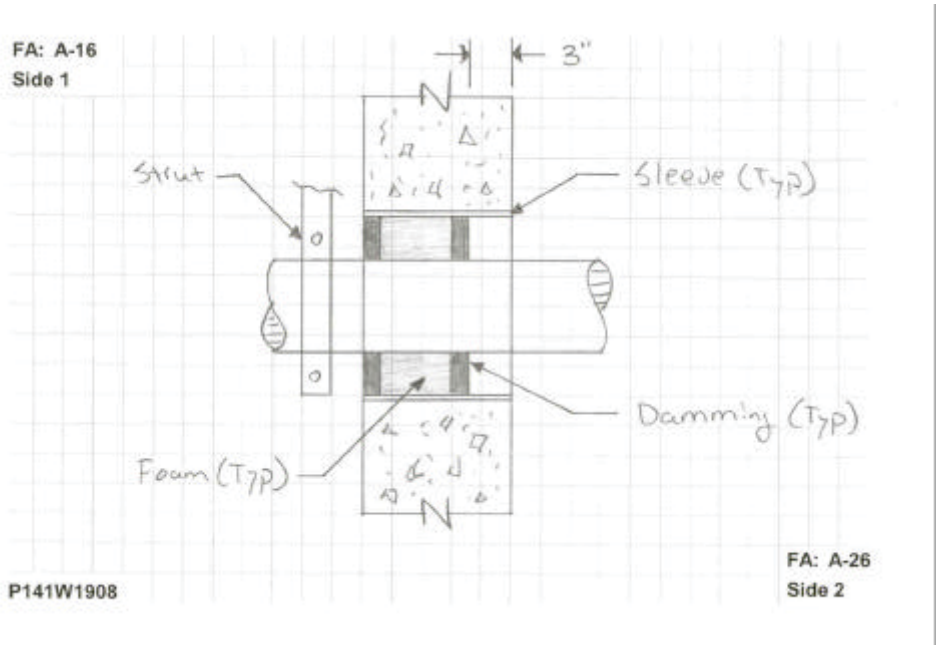

Penetration Seal Data

Appendix: B13

Photos: P141W1908

Fire Area A-16 (Side 1)

Fire Area A-16 (Side 1)

Fire Area A-26 (Side 2)

Fire Area A-26 (Side 2)

Penetration Seal Data

Appendix: B13

Heat Affected Zone Review: P141W1908

Fire Area (Side 1) A-16

No issues within Heat Affected Zone

Fire Area (Side 2) A-26

No issues within Heat Affected Zone

Review Distances

(Reference M-663-00017A, Figure 7.2.3-1)

12" Pipe			
L1 & L2 Dist. (ft)	Temp. (°F)	R1 Radius (in)	R2 Radius (in)
0.5	1712	4.6	5.9
1	1524	3.7	5.1
1.5	1357	3	4.3
2	1209	2.3	3.6
2.5	1078	1.7	3.1
3	962	1.2	2.5
3.5	860	0.7	2.1
4	769	0.3	1.7
4.5	689	Contact	1.3
5	618		1
5.5	555		0.7
6	499		0.4
6.5	450		0.2
7	406		0
7.5	368		Contact

Side 1 Photo

No photo required.

Side 2 Photo

No photo required.

Sketch

No sketch required.

Penetration Seal Data

Appendix: B13

Penetration #: P141W1913

Penetration Type: M-1 **Fire Area (Side 1):** A-16 **Fire Area (Side 2):** A-26

Loc./Elev.: 2042'-1 1 **M-0X Dwg:** M-1X1919

1. **Barrier Thickness:** 12"
2. **Opening Size:** 12"D
3. **Penetrants:** (1)8"P
4. **Sealant Type:** Foam
5. **Damming Side1:** Recessed 3-1/2"
6. **Damming Side 2:** Flush
7. **Damming Continuity (Acc/Rej):** Accept
8. **Boot Condition (Acc/Rej):** N/A
9. **Sealant Depth:** 6-1/2"
10. **Annular Gap (smallest):** 1-1/2"
11. **Gap between pen:** N/A
12. **Barrier Type:** F
13. **Opening Sleeved or Concrete:** Steel
14. **Pipe Insulated:** No

Jeff Suter
Prepared By:

Wayne Aregood
Reviewed By:

Walkdown Comments:
Barrier thickness based on drawing M-1X1411.

Sketch:

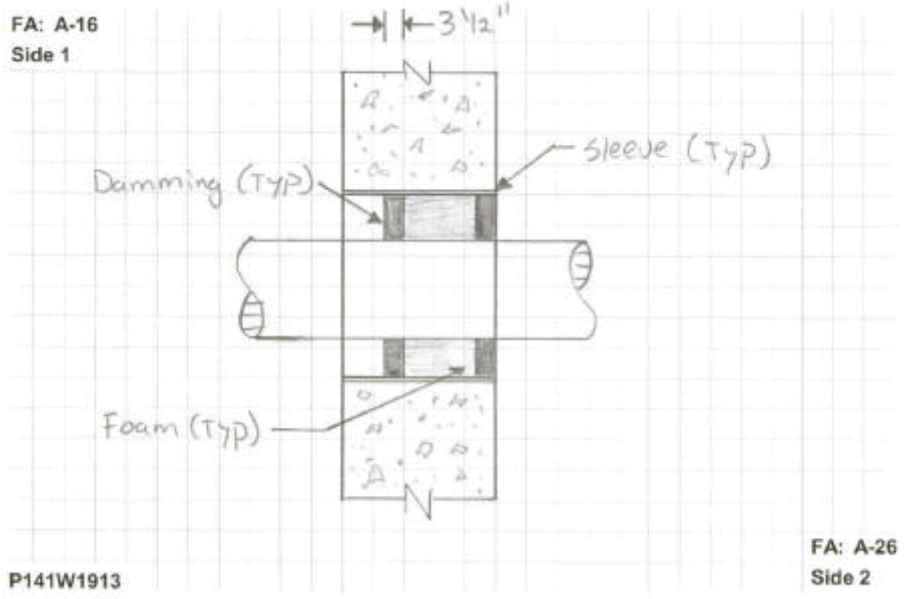

Penetration Seal Data

Appendix: B13

Photos: P141W1913

Fire Area A-16 (Side 1)

Fire Area A-16 (Side 1)

Fire Area A-26 (Side 2)

Fire Area A-26 (Side 2)

Penetration Seal Data

Appendix: B13

Penetration #: P142S1083

Penetration Type: M-1 **Fire Area (Side 1):** A-16 **Fire Area (Side 2):** A-3

Loc./Elev.: 2026'-0" **M-0X Dwg:** M-1X1421

1. **Barrier Thickness:** 20"
2. **Opening Size:** 30"D
3. **Penetrants:** (1)24"P
4. **Sealant Type:** Foam
5. **Damming Side1:** N/A
6. **Damming Side 2:** Assumed per detail
7. **Damming Continuity (Acc/Rej):** Accept
8. **Boot Condition (Acc/Rej):** N/A
9. **Sealant Depth:** Assumed per detail
10. **Annular Gap (smallest):** 2"
11. **Gap between pen:** N/A
12. **Barrier Type:** F
13. **Opening Sleeved or Concrete:** Steel
14. **Pipe Insulated:** No

Jeff Suter
Prepared By:

Wayne Aregood
Reviewed By:

Walkdown Comments:

Slab thickness based on C-0C1411. Insulation abuts bottom side of penetration. Top side is not insulated. Original inspection document indicates 6" foam depth (wsa).

Sketch:

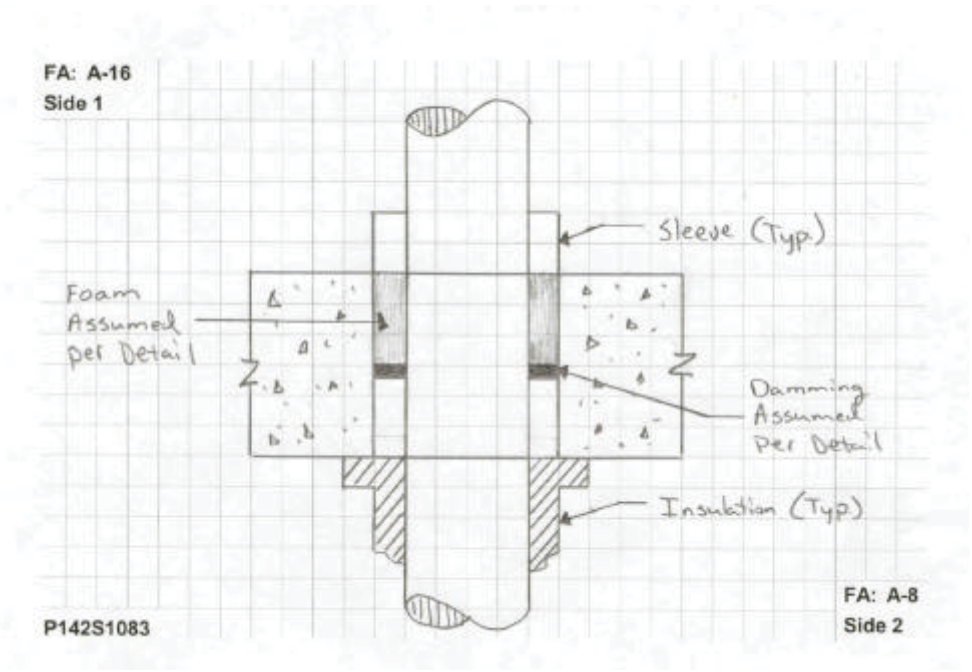

Penetration Seal Data

Appendix: B13

Photos: P142S1083

Fire Area A-16 (Side 1)

Fire Area A-16 (Side 1)

Fire Area A-3 (Side 2)

Fire Area A-3 (Side 2)

Penetration Seal Data

Appendix: B13

Heat Affected Zone Review: P142S1083

Fire Area (Side 1) A-16

There are no issues within the Heat Affected Zone.

Fire Area (Side 2) A-3

There are no issues within the Heat Affected Zone.

Review Distances

(Reference M-663-00017A, Figure 7.2.3-1)

24" Pipe			
L1 & L2 Dist. (ft)	Temp. (°F)	R1 Radius (in)	R2 Radius (in)
0.5	1763	4.8	6.1
1	1615	4.1	5.5
1.5	1480	3.5	4.9
2	1357	3	4.3
2.5	1244	2.5	3.8
3	1141	2	3.3
3.5	1048	1.6	2.9
4	962	1.2	2.5
4.5	884	0.8	2.2
5	813	0.5	1.9
5.5	748	0.2	1.6
6	689	Contact	1.3
6.5	635		1.1
7	585		0.8
7.5	540		0.6
8	499		0.4
8.5	462		0.3
9	427		0.1
9.5	396		Contact

Side 1 Photo

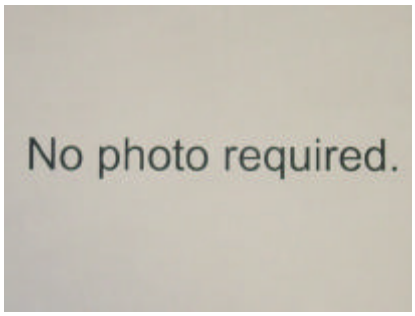

Side 2 Photo

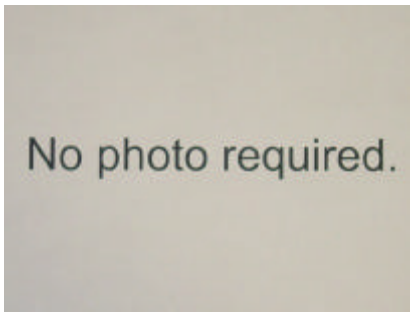

Sketch

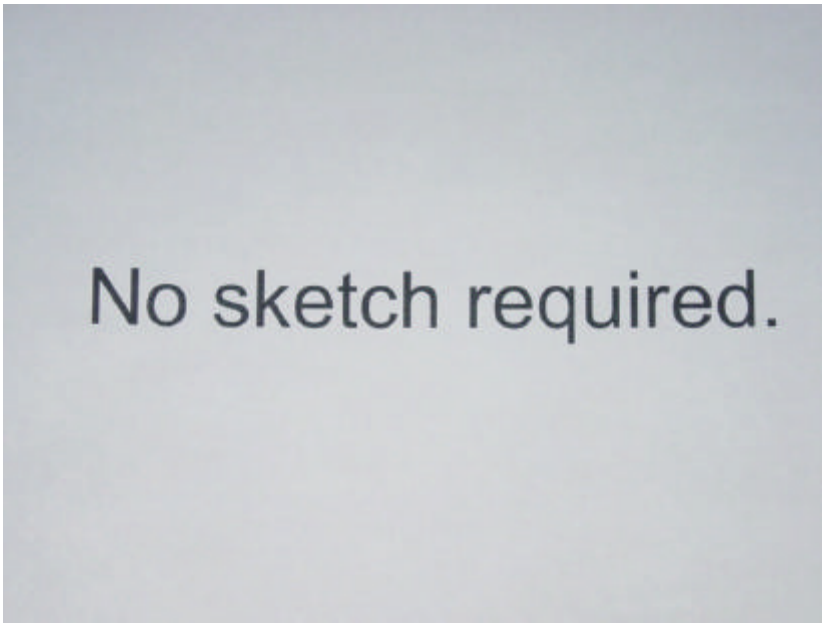

Penetration Seal Data

Appendix: B13

Penetration #: P142S1086

Penetration Type: FB-1 **Fire Area (Side 1):** A-16 **Fire Area (Side 2):** A-3

Loc./Elev.: 2026'-0" **M-0X Dwg:** M-1X1421

1. **Barrier Thickness:** 12"
2. **Opening Size:** 30"D
3. **Penetrants:** (1) 24"P
4. **Sealant Type:** Ceramic Fiber
5. **Damming Side1:** Boot
6. **Damming Side 2:** Boot
7. **Damming Continuity (Acc/Rej):** N/A
8. **Boot Condition (Acc/Rej):** Accept
9. **Sealant Depth:** Assumed per detail
10. **Annular Gap (smallest):** 2"
11. **Gap between pen:** N/A
12. **Barrier Type:** F
13. **Opening Sleeved or Concrete:** Steel
14. **Pipe Insulated:** No

Jeff Suter
Prepared By:

Wayne Aregood
Reviewed By:

Walkdown Comments:
Slab thickness based on C-0C1411.

Sketch:

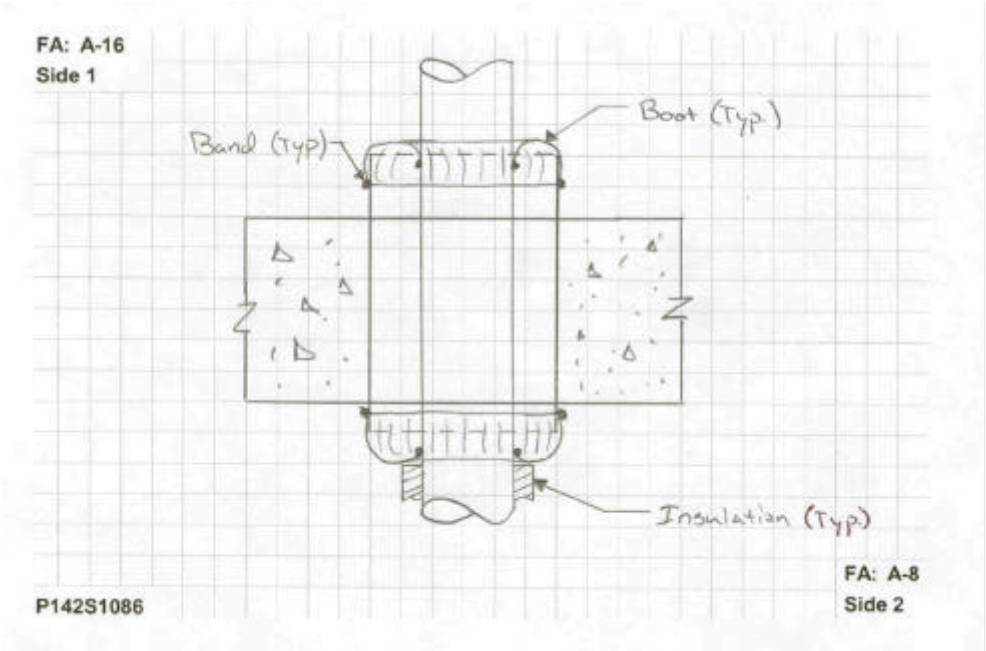

Penetration Seal Data

Appendix: B13

Photos: P142S1086

Fire Area A-16 (Side 1)

Fire Area A-16 (Side 1)

Fire Area A-3 (Side 2)

Fire Area A-3 (Side 2)

Penetration Seal Data

Appendix: B13

Heat Affected Zone Review: P142S1086

Fire Area (Side 1) A-16

1. Armaflex insulation

Fire Area (Side 2) A-3

1. 1-1/2" Cond. 1U1F2K, not within Heat Affected Zone
2. 1-1/2" Cond. 6J1118, not within Heat Affected Zone
3. 2" Cond. 6U1168, not within Heat Affected Zone

Review Distances

(Reference M-663-00017A, Figure 7.2.3-1)

24" Pipe			
L1 & L2 Dist. (ft)	Temp. (°F)	R1 Radius (in)	R2 Radius (in)
0.5	1763	4.8	6.1
1	1615	4.1	5.5
1.5	1480	3.5	4.9
2	1357	3	4.3
2.5	1244	2.5	3.8
3	1141	2	3.3
3.5	1048	1.6	2.9
4	962	1.2	2.5
4.5	884	0.8	2.2
5	813	0.5	1.9
5.5	748	0.2	1.6
6	689	Contact	1.3
6.5	635		1.1
7	585		0.8
7.5	540		0.6
8	499		0.4
8.5	462		0.3
9	427		0.1
9.5	396		Contact

Side 1 Photo

No photo required.

Side 2 Photo

No photo required.

Sketch

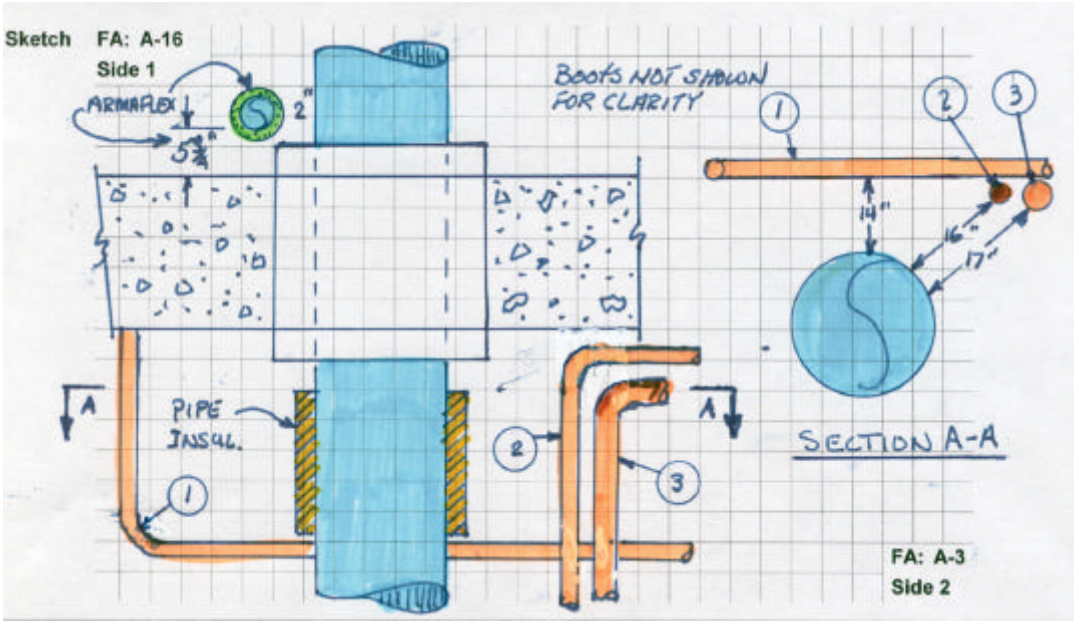

Penetration Seal Data

Appendix: B13

Penetration #: P142W1932

Penetration Type: M-6A **Fire Area (Side 1):** A-16 **Fire Area (Side 2):** A-10

Loc./Elev.: 2030'-0" **M-0X Dwg:** M-1X1919

1. **Barrier Thickness:** 36"
2. **Opening Size:** 24"D
3. **Penetrants:** (1)18"P
4. **Sealant Type:** Foam
5. **Damming Side1:** Flush
6. **Damming Side 2:** Recessed 25"
7. **Damming Continuity (Acc/Rej):** Accept
8. **Boot Condition (Acc/Rej):** N/A
9. **Sealant Depth:** 9"
10. **Annular Gap (smallest):** 2"
11. **Gap between pen:** N/A
12. **Barrier Type:** F
13. **Opening Sleeved or Concrete:** Steel
14. **Pipe Insulated:** No

Jeff Suter
Prepared By:

Wayne Aregood
Reviewed By:

Walkdown Comments:

Barrier thickness based on drawing C-1C1421. Changed detail to M-6A based on field inspection. Damming on side two is irregular in depth. Top portion of seal is recessed 25", while bottom portion is recessed 14".

Sketch:

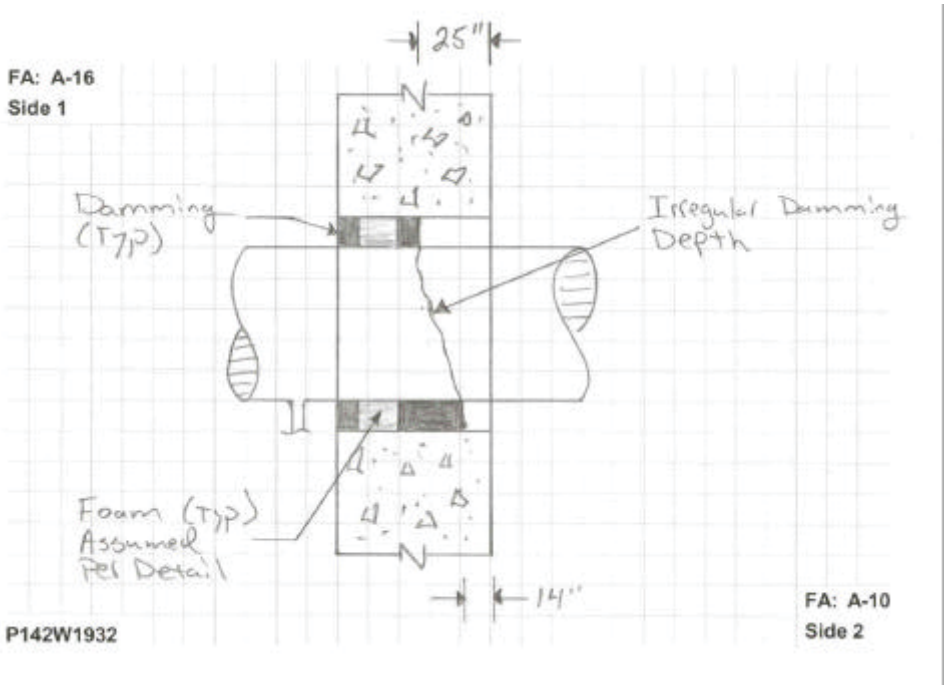

Penetration Seal Data

Appendix: B13

Photos: P142W1932

Fire Area A-16 (Side 1)

Fire Area A-16 (Side 1)

Fire Area A-10 (Side 2)

Fire Area A-10 (Side 2)

Penetration Seal Data

Appendix: B13

Heat Affected Zone Review: P142W1932

Fire Area (Side 1) A-16

1. 1-1/2" Cond. 1U1015: Not within Heat Affected Zone
2. 1-1/2" Cond. 1U1014: Not within Heat Affected Zone
3. 1-1/2" Cond. 1U1013: Not within Heat Affected Zone
4. 1-1/2" Cond. 1U1012: Not within Heat Affected Zone

Fire Area (Side 2) A-10

No issues within Heat Affected Zone

Review Distances

(Reference M-663-00017A, Figure 7.2.3-1)

18" Pipe			
L1 & L2 Dist. (ft)	Temp. (°F)	R1 Radius (in)	R2 Radius (in)
0.5	1741	4.7	6
1	1576	3.9	5.3
1.5	1426	3.3	4.6
2	1292	2.7	4
2.5	1171	2.1	3.5
3	1062	1.6	3
3.5	964	1.2	2.5
4	875	0.8	2.1
4.5	795	0.4	1.8
5	724	0.1	1.5
5.5	659	Contact	1.2
6	600		0.9
6.5	548		0.7
7	501		0.5
7.5	458		0.3
8	419		0.1
8.5	385		Contact

Side 1 Photo

Side 2 Photo

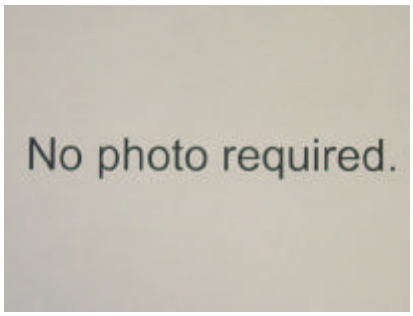

Sketch

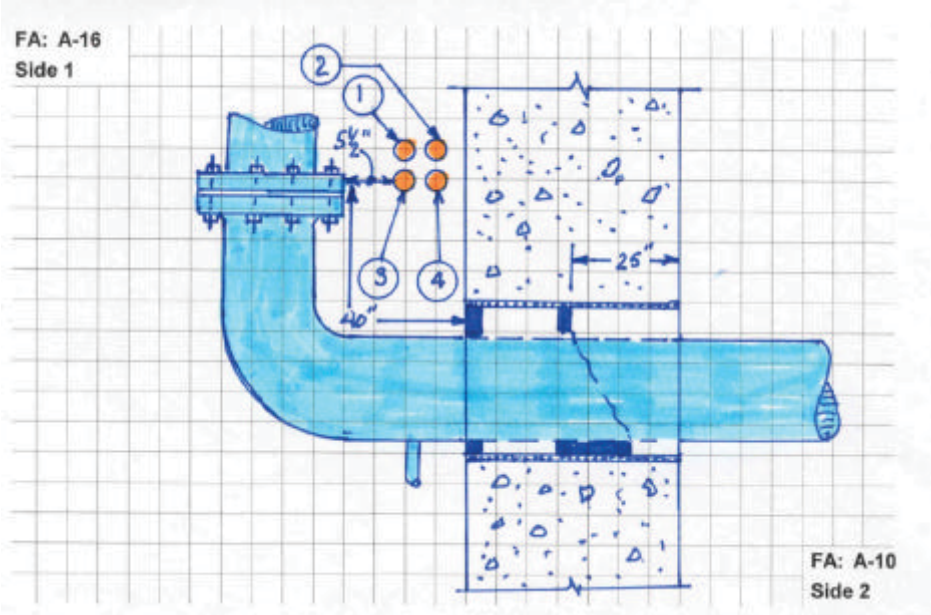

Penetration Seal Data

Appendix: B13

Penetration #: P143W2514

Penetration Type: M-1 **Fire Area (Side 1):** A-16 **Fire Area (Side 2):** A-5

Loc./Elev.: 2043'-0" **M-0X Dwg:** M-1X1938

1. **Barrier Thickness:** 12"
2. **Opening Size:** 18"D
3. **Penetrants:** (1)12"P
4. **Sealant Type:** Foam
5. **Damming Side1:** 3-1/2" recessed
6. **Damming Side 2:** Flush
7. **Damming Continuity (Acc/Rej):** Accept
8. **Boot Condition (Acc/Rej):** N/A
9. **Sealant Depth:** 6-1/2"
10. **Annular Gap (smallest):** 1/2"
11. **Gap between pen:** N/A
12. **Barrier Type:** F
13. **Opening Sleeved or Concrete:** Steel
14. **Pipe Insulated:** No

Wayne Aregood
Prepared By:

Jeff Suter
Reviewed By:

Walkdown Comments:

Barrier thickness determined by Drawing C-0C1431, see Plan View at Elevation 2038'-41/4".

Sketch:

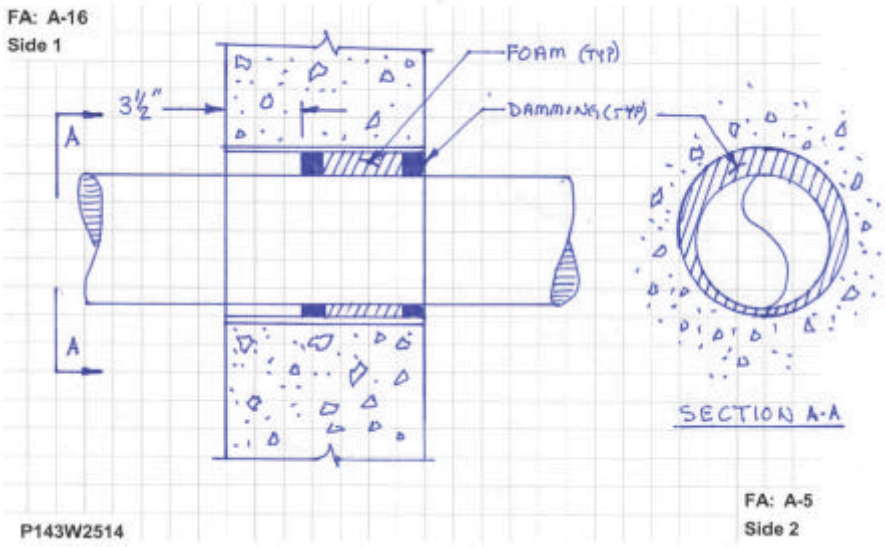

Penetration Seal Data

Appendix: B13

Photos: P143W2514

Fire Area A-16 (Side 1)

Fire Area A-16 (Side 1)

Fire Area A-5 (Side 2)

Fire Area A-5 (Side 2)

Penetration Seal Data

Appendix: B13

Heat Affected Zone Review: P143W2514

Fire Area (Side 1) A-16

1. 24" Cable Tray 5U5A94 is within Heat Affected Zone. Further review determined that this cable tray is PFSSD. Document E-1F9910 provides the basis for acceptance.
2. Cable Airdrop from 1" Conduit 5U5A1M, within Heat Affected Zone. Further review determined that this cable is not PFSSD. Set-route control is necessary.
3. Cable Airdrop from 3/4" Conduit 5U438R, Not within Heat Affected Zone.

Fire Area (Side 2) A-5

4. 24" Cable Tray 5U5A94 is within Heat Affected Zone. Further review determined that this cable tray is PFSSD. Document E-1F9910 provides the basis for acceptance.

Review Distances

(Reference M-663-00017A, Figure 7.2.3-1)

12" Pipe			
L1 & L2 Dist. (ft)	Temp. (°F)	R1 Radius (in)	R2 Radius (in)
0.5	1712	4.6	5.9
1	1524	3.7	5.1
1.5	1357	3	4.3
2	1209	2.3	3.6
2.5	1078	1.7	3.1
3	962	1.2	2.5
3.5	860	0.7	2.1
4	769	0.3	1.7
4.5	689	Contact	1.3
5	618		1
5.5	555		0.7
6	499		0.4
6.5	450		0.2
7	406		0
7.5	368		Contact

Side 1 Photo

Side 2 Photo

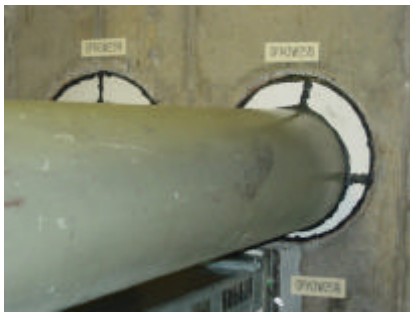

Sketch

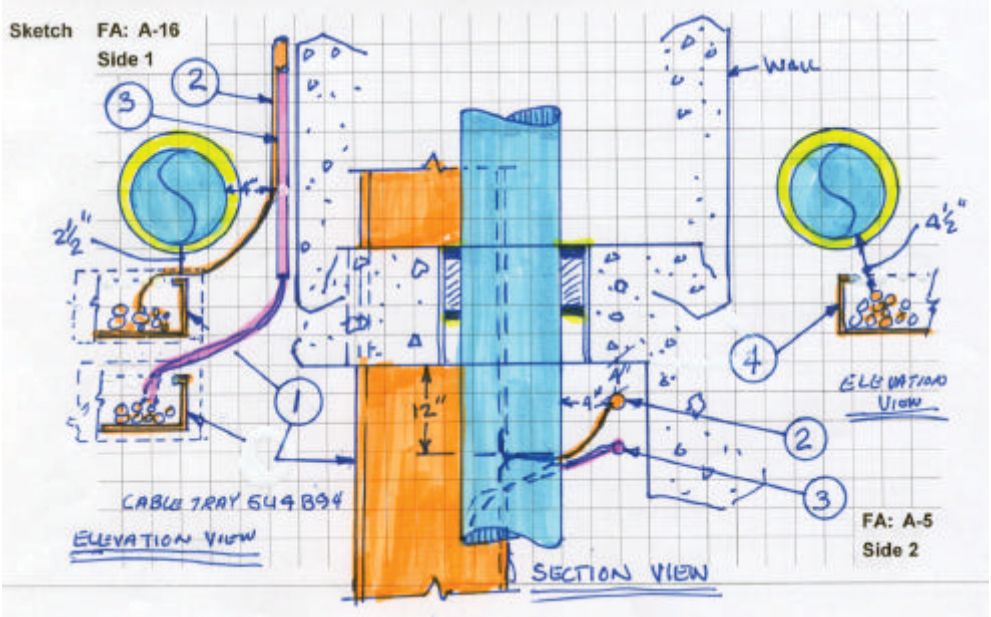

Penetration Seal Data

Appendix: B13

Penetration #: P143W2515

Penetration Type: M-6A **Fire Area (Side 1):** A-16 **Fire Area (Side 2):** A-5

Loc./Elev.: 2043'-0" **M-0X Dwg:** M-1X1938

1. **Barrier Thickness:** 12"
2. **Opening Size:** 18"D
3. **Penetrants:** (1) 12"P
4. **Sealant Type:** Foam
5. **Damming Side1:** 1/4" recessed
6. **Damming Side 2:** Flush
7. **Damming Continuity (Acc/Rej):** Accept
8. **Boot Condition (Acc/Rej):** N/A
9. **Sealant Depth:** 9-3/4"
10. **Annular Gap (smallest):** 1/2"
11. **Gap between pen:** N/A
12. **Barrier Type:** F
13. **Opening Sleeved or Concrete:** Steel
14. **Pipe Insulated:** No

Wayne Aregood
Prepared By:

Jeff Suter
Reviewed By:

Walkdown Comments:

Barrier thickness determined by Drawing C-0C1431, see Plan View at Elevation 2038'-41/4". Detail changed from M-1 to M-6A based on actual sealant depth.

Sketch:

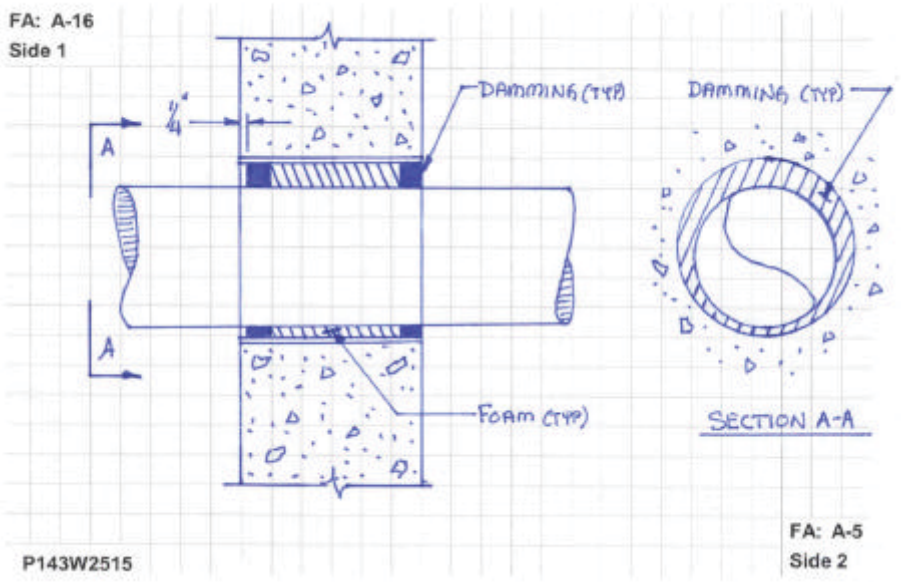

Penetration Seal Data

Appendix: B13

Photos: P143W2515

Fire Area A-16 (Side 1)

Fire Area A-16 (Side 1)

Fire Area A-5 (Side 2)

Fire Area A-5 (Side 2)

Penetration Seal Data

Appendix: B13

Heat Affected Zone Review: P143W2515

Fire Area (Side 1) A-16

1. 24" Cable Tray, 5U5A94 is within Heat Affected Zone (1/2" clearance to Pipe strut clamp). Further review determined that this cable tray is PFSSD. Document E-1F9910 provides the basis for acceptance.

Fire Area (Side 2) A-5

1. 24" Cable Tray, 5U5A94 is within Heat Affected Zone (3-1/2").+
   Further review determined that this cable tray is PFSSD. Document E-1F9910 provides the basis for acceptance.

Review Distances

(Reference M-663-00017A, Figure 7.2.3-1)

12" Pipe			
L1 & L2 Dist. (ft)	Temp. (°F)	R1 Radius (in)	R2 Radius (in)
0.5	1712	4.6	5.9
1	1524	3.7	5.1
1.5	1357	3	4.3
2	1209	2.3	3.6
2.5	1078	1.7	3.1
3	962	1.2	2.5
3.5	860	0.7	2.1
4	769	0.3	1.7
4.5	689	Contact	1.3
5	618		1
5.5	555		0.7
6	499		0.4
6.5	450		0.2
7	406		0
7.5	368		Contact

Side 1 Photo

Side 2 Photo

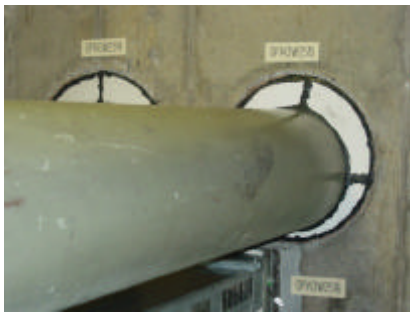

Sketch

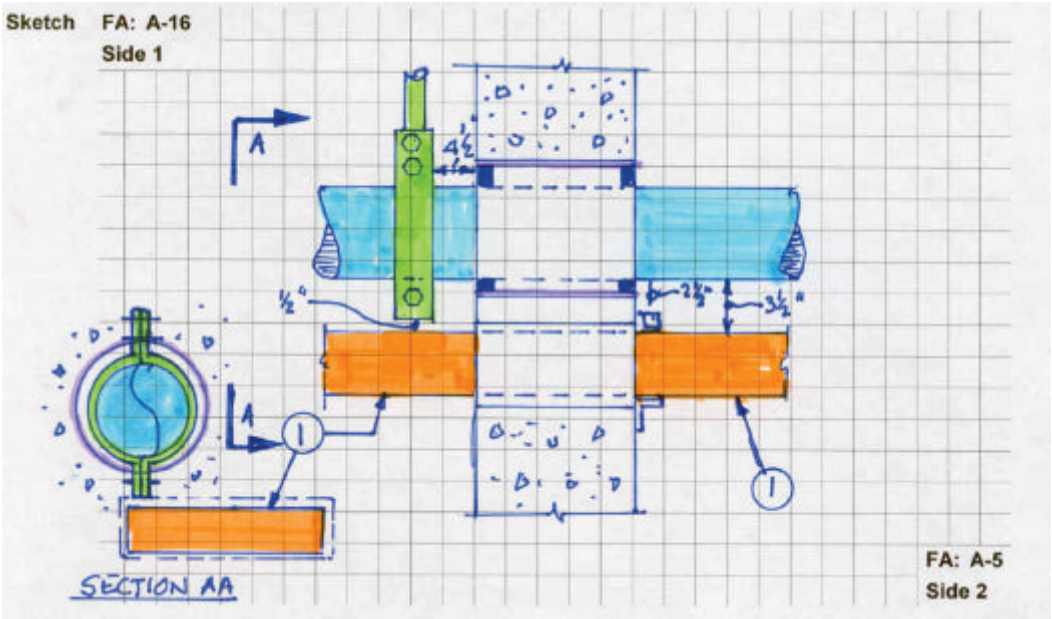

Penetration Seal Data

Appendix: B13

Penetration #: P145S0952

Penetration Type: FB-1 **Fire Area (Side 1):** A-23 **Fire Area (Side 2):** A-15

Loc./Elev.: 2026'-0" **M-0X Dwg:** M-1X1352

1. **Barrier Thickness:** 24"
2. **Opening Size:** 14" D
3. **Penetrants:** (1) 4"P
4. **Sealant Type:** Ceramic Fiber
5. **Damming Side1:** Boot
6. **Damming Side 2:** Boot
7. **Damming Continuity (Acc/Rej):** N/A
8. **Boot Condition (Acc/Rej):** Accept
9. **Sealant Depth:** Assumed per detail
10. **Annular Gap (smallest):** * 1-11/16"
11. **Gap between pen:** N/A
12. **Barrier Type:** A F W
13. **Opening Sleeved or Concrete:** Steel
14. **Pipe Insulated:** Yes

Jeff Suter
Prepared By:

Wayne Aregood
Reviewed By:

Walkdown Comments:

Slab thickness based on C-1C1352. Top side of penetration is not fully accessible for inspection due to a box enclosure above penetration. * Original inspection records indicate 1-11/16" annular gap and the installation of the Lap Seal per FCR 1-BBI-305 (wsa).

Sketch:

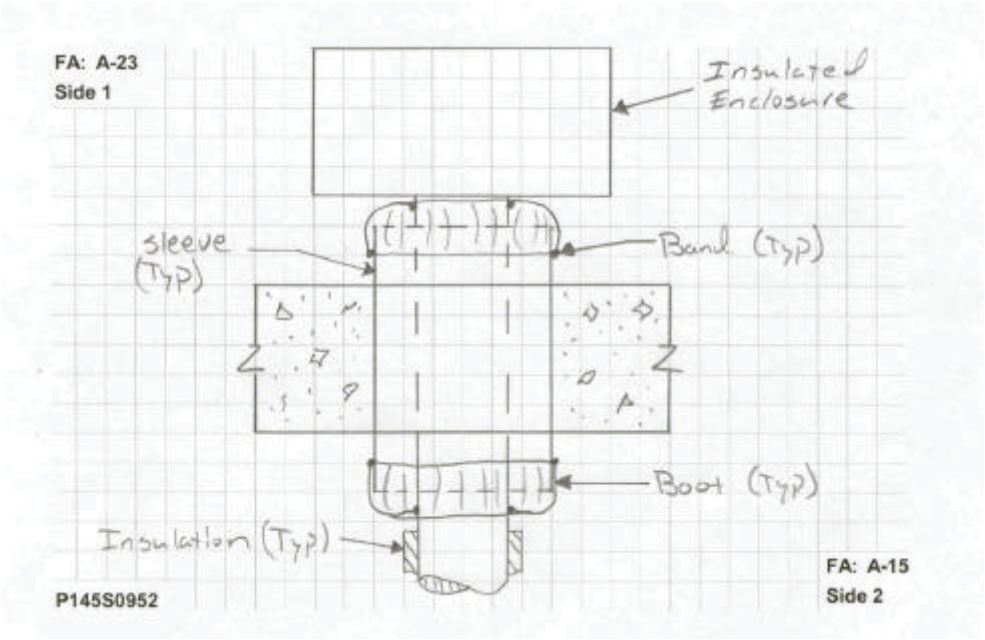

Penetration Seal Data

Appendix: B13

Photos: P145S0952

Fire Area A-23 (Side 1)

Fire Area A-23 (Side 1)

Fire Area A-15 (Side 2)

Fire Area A-15 (Side 2)

Penetration Seal Data

Appendix: B13

Penetration #: P145S0954

Penetration Type: FB-1 **Fire Area (Side 1):** A-23 **Fire Area (Side 2):** A-15

Loc./Elev.: 2026'-0" **M-0X Dwg:** M-1X1352

1. **Barrier Thickness:** 24"
2. **Opening Size:** 14"D
3. **Penetrants:** (1) 4"P
4. **Sealant Type:** Ceramic Fiber
5. **Damming Side1:** Boot
6. **Damming Side 2:** Boot
7. **Damming Continuity (Acc/Rej):** N/A
8. **Boot Condition (Acc/Rej):** Accept
9. **Sealant Depth:** Assumed per detail
10. **Annular Gap (smallest):** 3/8"
11. **Gap between pen:** N/A
12. **Barrier Type:** A F W
13. **Opening Sleeved or Concrete:** Steel
14. **Pipe Insulated:** Yes

Jeff Suter
Prepared By:

Wayne Aregood
Reviewed By:

Walkdown Comments:

Slab thickness based on C-1C1352. It appears that an FB-6 detail was utilized on the topside of penetration for flooding protection of insulation penetrating seal. Original inspection records indicate the installation of the Lap Seal per FCR 1-BBI-305 (wsa).

Sketch:

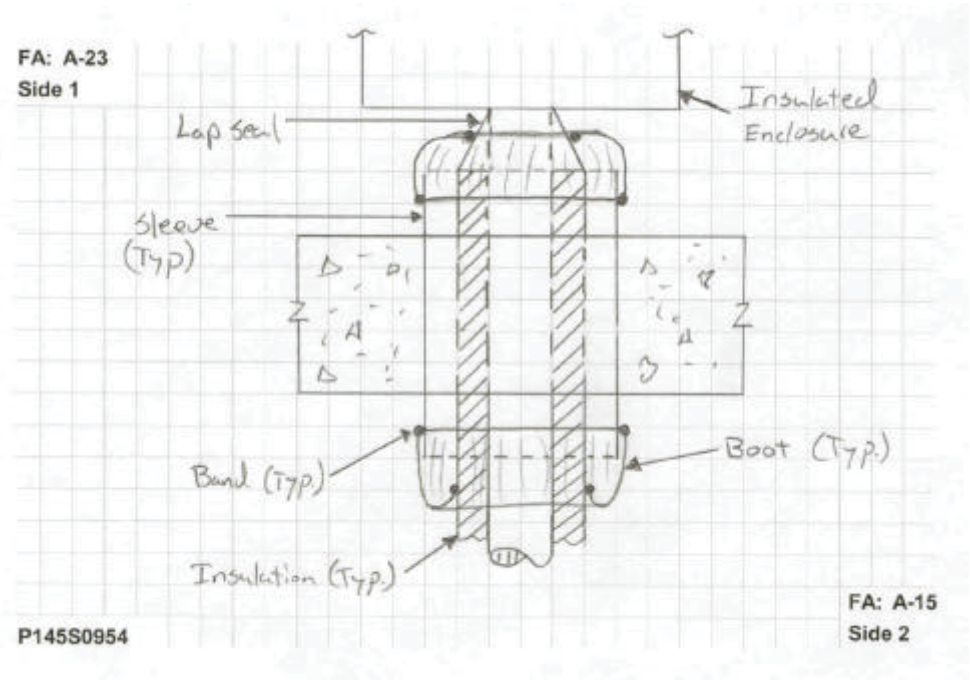

Penetration Seal Data

Appendix: B13

Photos: P145S0954

Fire Area A-23 (Side 1)

Fire Area A-23 (Side 1)

Fire Area A-15 (Side 2)

Fire Area A-15 (Side 2)

Penetration Seal Data

Appendix: B13

Penetration #: P152W1421

Penetration Type: M-1 **Fire Area (Side 1):** A-19 **Fire Area (Side 2):** CC-1

Loc./Elev.: 2055'-6 7 **M-0X Dwg:** M-1X1904

1. **Barrier Thickness:** 24"
2. **Opening Size:** 16"D
3. **Penetrants:** (1)12"P
4. **Sealant Type:** Foam
5. **Damming Side1:** Flush
6. **Damming Side 2:** 14" recessed
7. **Damming Continuity (Acc/Rej):** Accept
8. **Boot Condition (Acc/Rej):** N/A
9. **Sealant Depth:** 8"
10. **Annular Gap (smallest):** 1/2"
11. **Gap between pen:** N/A
12. **Barrier Type:** A F
13. **Opening Sleeved or Concrete:** Steel
14. **Pipe Insulated:** No

Wayne Aregood
Prepared By:

Jeff Suter
Reviewed By:

Walkdown Comments:

Sketch:

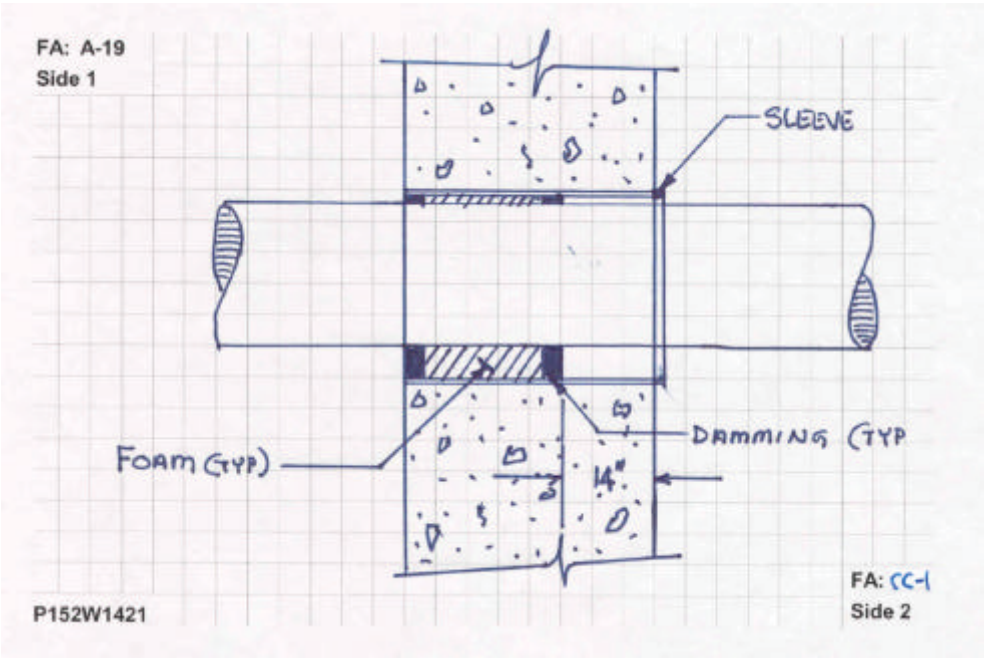

Penetration Seal Data

Appendix: B13

Photos: P152W1421

Fire Area A-19 (Side 1)

Fire Area A-19 (Side 1)

Fire Area CC-1 (Side 2)

Fire Area CC-1 (Side 2)

Penetration Seal Data

Appendix: B13

Heat Affected Zone Review: P152W1421

Fire Area (Side 1) A-19

1. 1-3/4" Conduit 5U1N2R, within Heat Affected Zone. Further review determined that this conduit is not PFSSD. Set-route control is necessary.

Fire Area (Side 2) CC-1

2. 1/2" EMT Lighting Conduit, not an issue
3. 1/2" EMT Lighting Conduit, not an issue
4. 1" EMT Lighting Conduit, not an issue
5. 1/2" EMT Lighting Conduit, not an issue

Review Distances

(Reference M-663-00017A, Figure 7.2.3-1)

12" Pipe			
L1 & L2 Dist. (ft)	Temp. (°F)	R1 Radius (in)	R2 Radius (in)
0.5	1712	4.6	5.9
1	1524	3.7	5.1
1.5	1357	3	4.3
2	1209	2.3	3.6
2.5	1078	1.7	3.1
3	962	1.2	2.5
3.5	860	0.7	2.1
4	769	0.3	1.7
4.5	689	Contact	1.3
5	618		1
5.5	555		0.7
6	499		0.4
6.5	450		0.2
7	406		0
7.5	368		Contact

Side 1 Photo

No photo required.

Side 2 Photo

No photo required.

Sketch

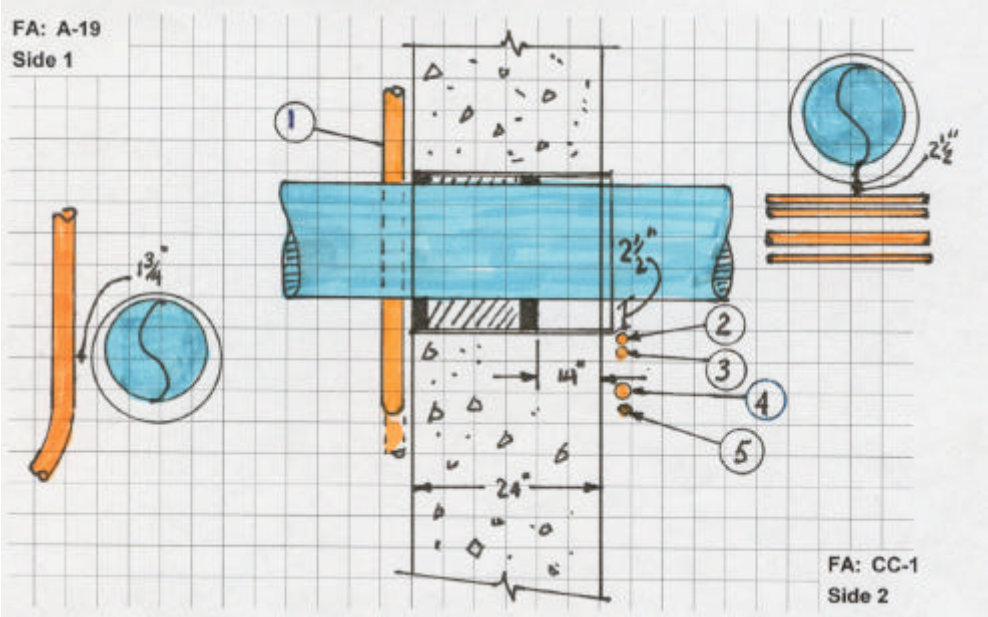

Penetration Seal Data

Appendix: B13

Penetration #: P311W0841

Penetration Type: M-6A **Fire Area (Side 1):** C-1 **Fire Area (Side 2):** CC-1

Loc./Elev.: 1976'-0" **M-0X Dwg:** M-1X3901

1. **Barrier Thickness:** 36"
2. **Opening Size:** 36"D
3. **Penetrants:** (1)30"P
4. **Sealant Type:** Foam
5. **Damming Side1:** Flush
6. **Damming Side 2:** 19" recessed
7. **Damming Continuity (Acc/Rej):** Accept
8. **Boot Condition (Acc/Rej):** N/A
9. **Sealant Depth:** 15"
10. **Annular Gap (smallest):** 2"
11. **Gap between pen:** N/A
12. **Barrier Type:** A F W
13. **Opening Sleeved or Concrete:** Steel
14. **Pipe Insulated:** No

Wayne Aregood
Prepared By:

Jeff Suter
Reviewed By:

Walkdown Comments:

Barrier thickness determined by Drawing C-1C3111. Side 2 is bulk fiber damming. Changed Detail from M-1 to M-6A based on actual sealant depth.

Sketch:

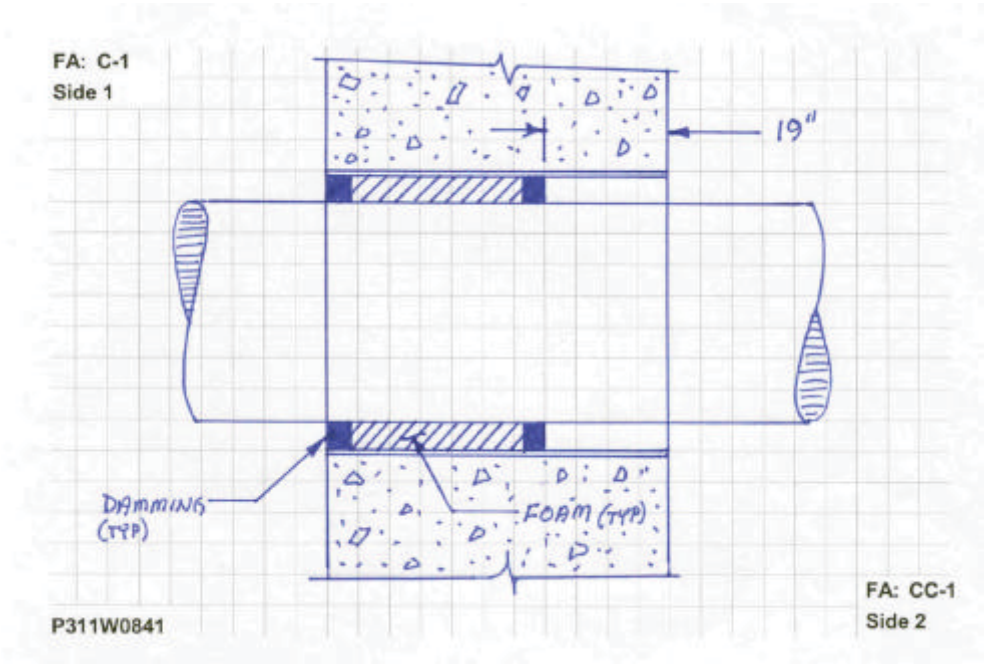

Penetration Seal Data

Appendix: B13

Photos: P311W0841

Fire Area C-1 (Side 1)

Fire Area C-1 (Side 1)

Fire Area CC-1 (Side 2)

Fire Area CC-1 (Side 2)

Penetration Seal Data

Appendix: B13

Heat Affected Zone Review: P311W0841

Fire Area (Side 1) C-1

1. 1-1/2" Cond 5JA1W: Not within Heat Affected Zone.

Fire Area (Side 2) CC-1

No issues within Heat Affected Zone.

Review Distances

(Reference M-663-00017A, Figure 7.2.3-1)

30" Pipe			
L1 & L2 Dist. (ft)	Temp. (°F)	R1 Radius (in)	R2 Radius (in)
0.5	1706	4.5	5.9
1	1513	3.7	5
1.5	1342	2.9	4.2
2	1192	2.2	3.6
2.5	1059	1.6	3
3	942	1.1	2.4
3.5	839	0.6	2
4	748	0.2	1.6
4.5	668	Contact	1.2
5	597		0.9
5.5	535		0.6
6	480		0.4
6.5	432		0.1
7	389		Contact

Side 1 Photo

Side 2 Photo

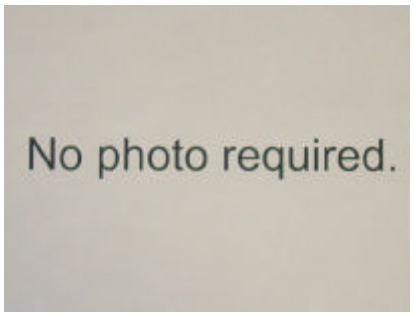

Sketch

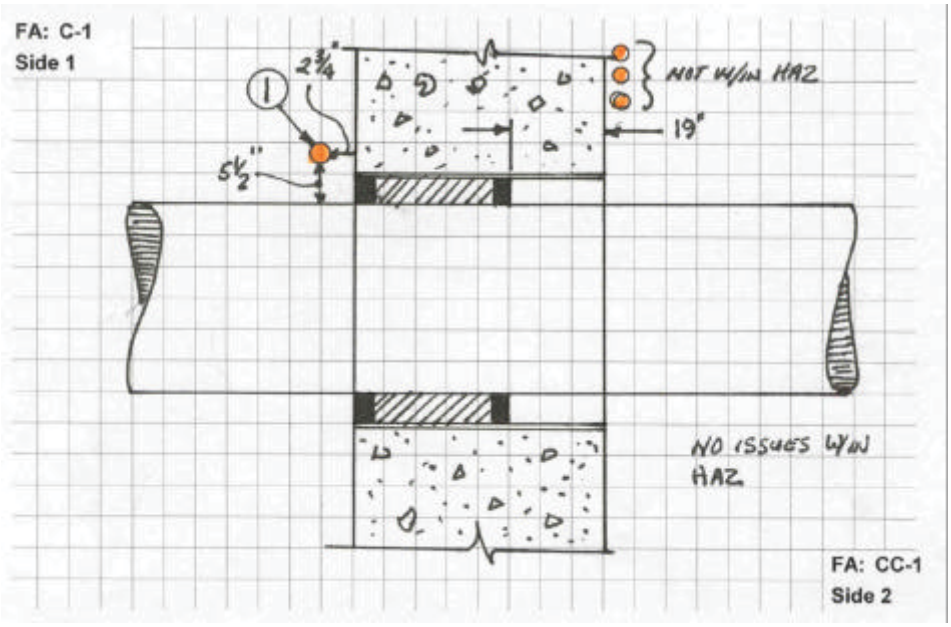

Penetration Seal Data

Appendix: B13

Penetration #: P311W0842

Penetration Type: M-6A **Fire Area (Side 1):** C-1 **Fire Area (Side 2):** CC-1

Loc./Elev.: 1976'-0" **M-0X Dwg:** M-1X3901

1. **Barrier Thickness:** 36"
2. **Opening Size:** 36"D
3. **Penetrants:** (1)30"P
4. **Sealant Type:** Foam
5. **Damming Side1:** Flush
6. **Damming Side 2:** 20" recessed
7. **Damming Continuity (Acc/Rej):** Accept
8. **Boot Condition (Acc/Rej):** N/A
9. **Sealant Depth:** 14"
10. **Annular Gap (smallest):** 2"
11. **Gap between pen:** N/A
12. **Barrier Type:** A F W
13. **Opening Sleeved or Concrete:** Steel
14. **Pipe Insulated:** No

Wayne Aregood
Prepared By:

Jeff Suter
Reviewed By:

Walkdown Comments:

Barrier thickness determined by Drawing C-1C3111. Side 2 is bulk fiber damming. Changed Detail from M-1 to M-6A based on actual sealant depth.

Sketch:

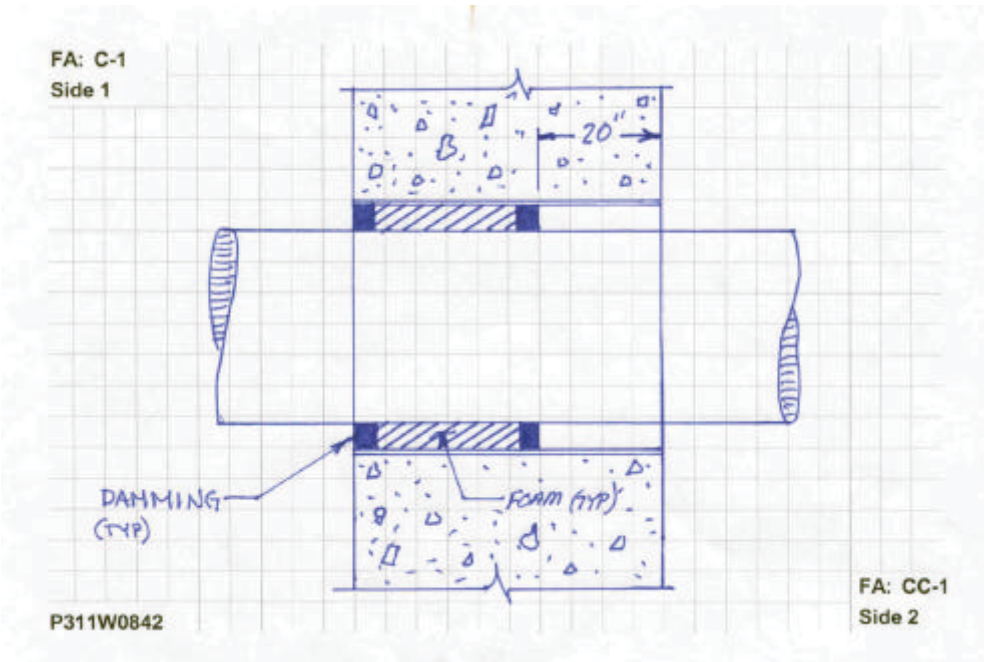

Penetration Seal Data

Appendix: B13

Photos: P311W0842

Fire Area C-1 (Side 1)

Fire Area C-1 (Side 1)

Fire Area CC-1 (Side 2)

Fire Area CC-1 (Side 2)

Penetration Seal Data

Appendix: B13

Heat Affected Zone Review: P311W0842

Fire Area (Side 1) C-1

1. 1-1/2" Cond 5JA1W: Not within Heat Affected Zone.

Fire Area (Side 2) CC-1

No issues within Heat Affected Zone.

Review Distances

(Reference M-663-00017A, Figure 7.2.3-1)

30" Pipe			
L1 & L2 Dist. (ft)	Temp. (°F)	R1 Radius (in)	R2 Radius (in)
0.5	1706	4.5	5.9
1	1513	3.7	5
1.5	1342	2.9	4.2
2	1192	2.2	3.6
2.5	1059	1.6	3
3	942	1.1	2.4
3.5	839	0.6	2
4	748	0.2	1.6
4.5	668	Contact	1.2
5	597		0.9
5.5	535		0.6
6	480		0.4
6.5	432		0.1
7	389		Contact

Side 1 Photo

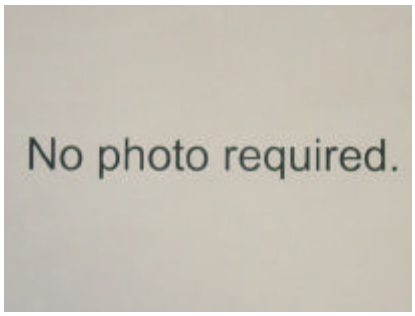

Side 2 Photo

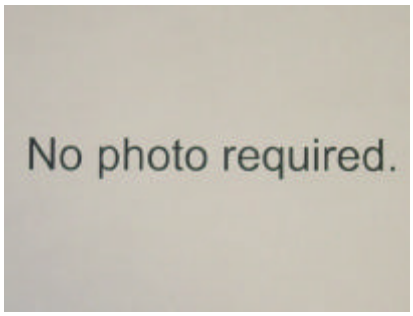

Sketch

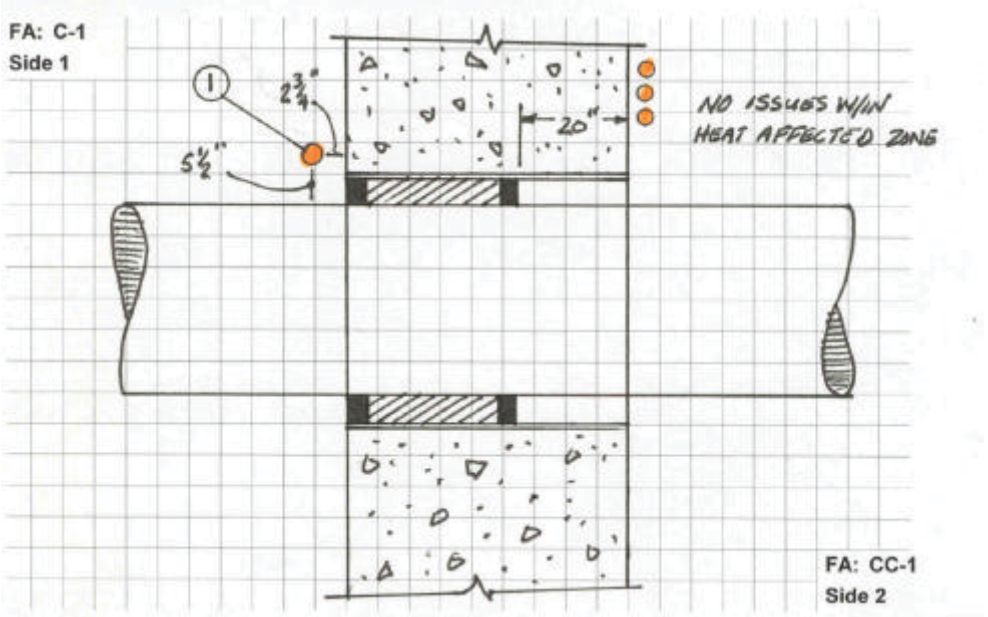

Penetration Seal Data

Appendix: B13

Penetration #: P311W0845

Penetration Type: M-6A **Fire Area (Side 1):** C-1 **Fire Area (Side 2):** CC-1

Loc./Elev.: 1976'-0" **M-0X Dwg:** M-1X3901

1. **Barrier Thickness:** 36"
2. **Opening Size:** 36"D
3. **Penetrants:** (1)30"P
4. **Sealant Type:** Foam
5. **Damming Side1:** Flush
6. **Damming Side 2:** 23" recessed
7. **Damming Continuity (Acc/Rej):** Accept
8. **Boot Condition (Acc/Rej):** N/A
9. **Sealant Depth:** 11"
10. **Annular Gap (smallest):** 2"
11. **Gap between pen:** N/A
12. **Barrier Type:** A F W
13. **Opening Sleeved or Concrete:** Steel
14. **Pipe Insulated:** No

Wayne Aregood
Prepared By:

Jeff Suter
Reviewed By:

Walkdown Comments:

Barrier thickness determined by Drawing C-1C3111. Side 2 is bulk fiber damming. Changed Detail from M-1 to M-6A based on actual sealant depth.

Sketch:

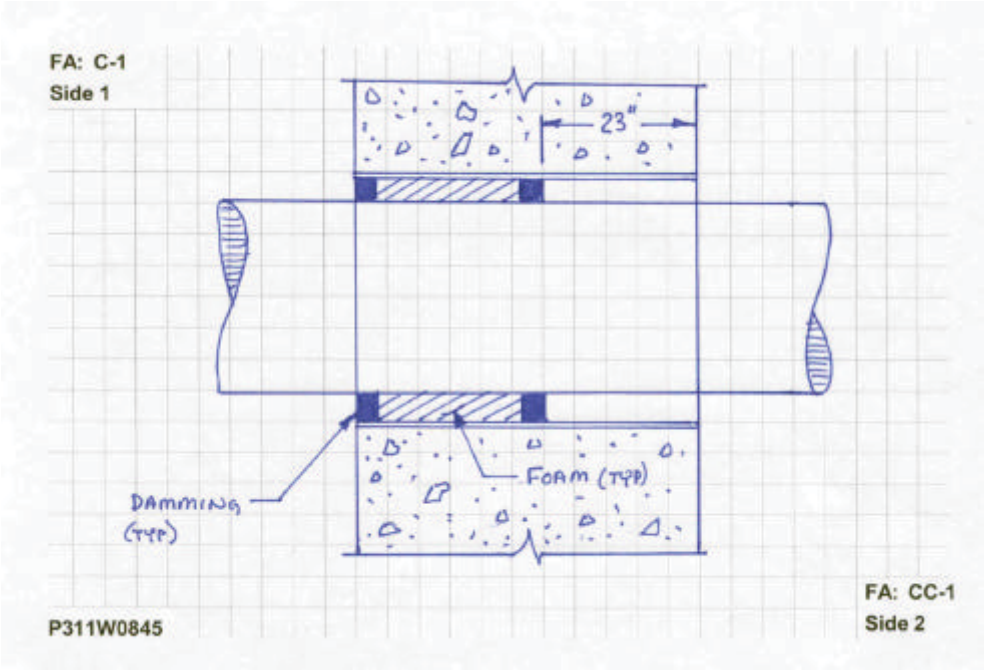

Penetration Seal Data

Appendix: B13

Photos: P311W0845

Fire Area C-1 (Side 1)

Fire Area C-1 (Side 1)

Fire Area CC-1 (Side 2)

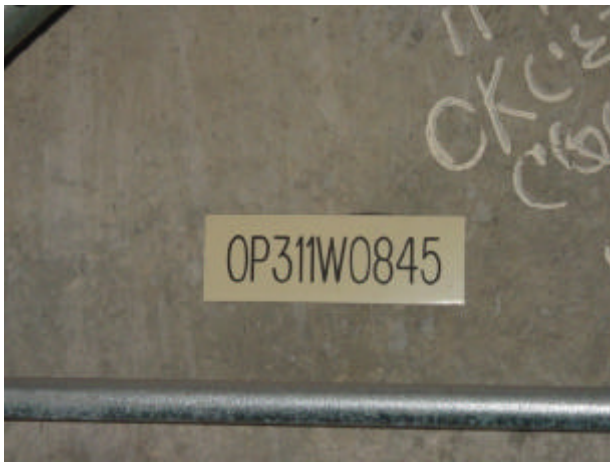

Fire Area CC-1 (Side 2)

Penetration Seal Data

Appendix: B13

Heat Affected Zone Review: P311W0845

Fire Area (Side 1) C-1

1. 1-1/2" Cond 5JA1W: Not within Heat Affected Zone.

Fire Area (Side 2) CC-1

No issues within Heat Affected Zone.

Review Distances

(Reference M-663-00017A, Figure 7.2.3-1)

30" Pipe			
L1 & L2 Dist. (ft)	Temp. (°F)	R1 Radius (in)	R2 Radius (in)
0.5	1706	4.5	5.9
1	1513	3.7	5
1.5	1342	2.9	4.2
2	1192	2.2	3.6
2.5	1059	1.6	3
3	942	1.1	2.4
3.5	839	0.6	2
4	748	0.2	1.6
4.5	668	Contact	1.2
5	597		0.9
5.5	535		0.6
6	480		0.4
6.5	432		0.1
7	389		Contact

Side 1 Photo

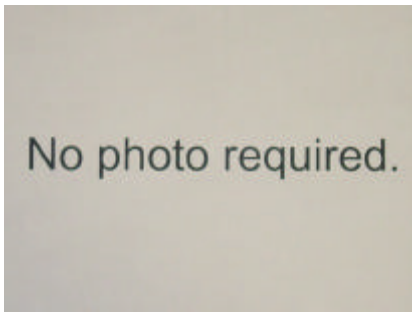

Side 2 Photo

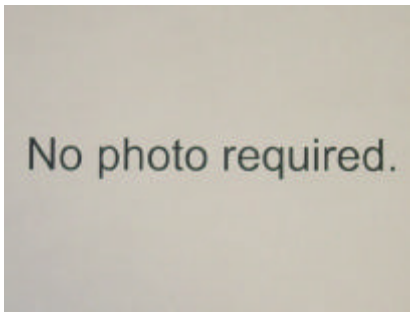

Sketch

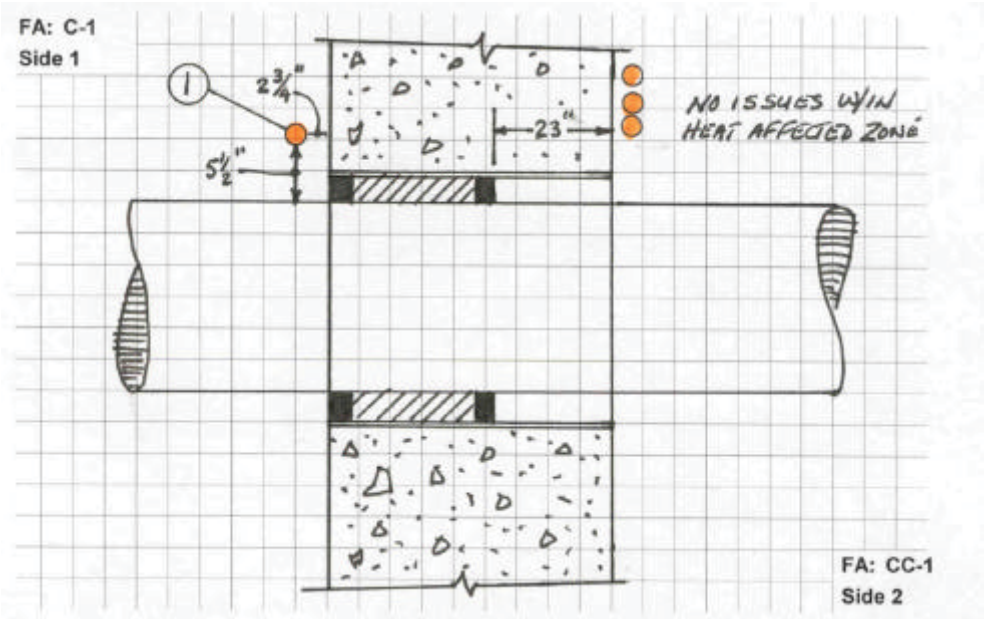

Penetration Seal Data

Appendix: B13

Penetration #: P611W0206

Penetration Type: M-1 **Fire Area (Side 1):** F-2 **Fire Area (Side 2):** F-3

Loc./Elev.: 2019'-0" **M-0X Dwg:** M-1X6906

1. **Barrier Thickness:** 12"
2. **Opening Size:** 16"D
3. **Penetrants:** (1)12"P
4. **Sealant Type:** Foam
5. **Damming Side1:** Recessed 2"
6. **Damming Side 2:** Flush
7. **Damming Continuity (Acc/Rej):** Accept
8. **Boot Condition (Acc/Rej):** N/A
9. **Sealant Depth:** 8"
10. **Annular Gap (smallest):** 1"
11. **Gap between pen:** N/A
12. **Barrier Type:** F
13. **Opening Sleeved or Concrete:** Steel
14. **Pipe Insulated:** No

Wayne Aregood
Prepared By:

Jeff Suter
Reviewed By:

Walkdown Comments:
Wall thickness determined by Drawing C-1C6111.

Sketch:

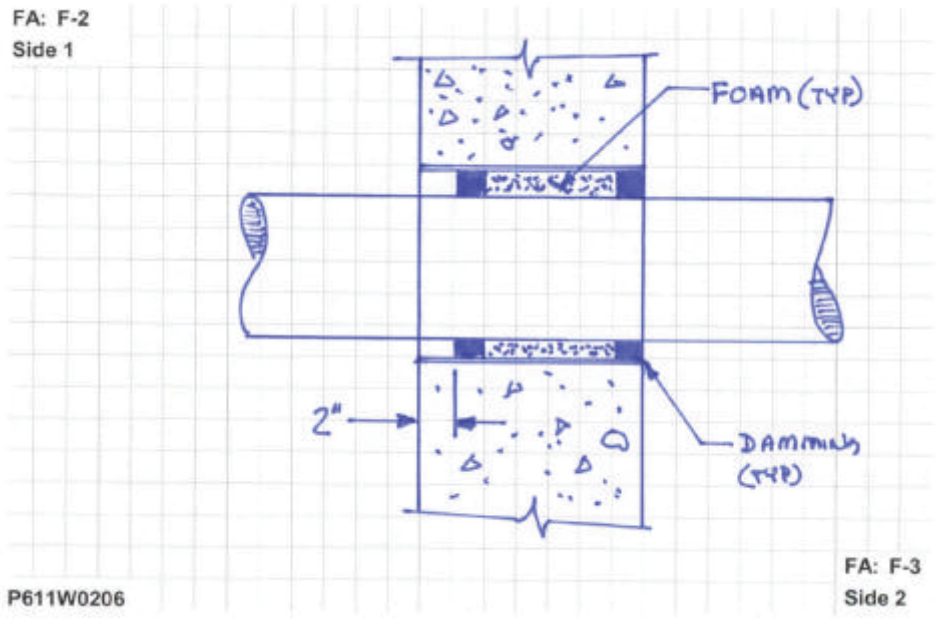

Penetration Seal Data

Appendix: B13

Photos: P611W0206

Fire Area F-2 (Side 1)

Fire Area F-2 (Side 1)

Fire Area F-3 (Side 2)

Fire Area F-3 (Side 2)

Penetration Seal Data

Appendix: B13

Heat Affected Zone Review: P611W0206

Fire Area (Side 1) F-2

No issues within Heat Affected Zone.

Fire Area (Side 2) F-3

No issues within Heat Affected Zone.

Review Distances

(Reference M-663-00017A, Figure 7.2.3-1)

12" Pipe			
L1 & L2 Dist. (ft)	Temp. (°F)	R1 Radius (in)	R2 Radius (in)
0.5	1712	4.6	5.9
1	1524	3.7	5.1
1.5	1357	3	4.3
2	1209	2.3	3.6
2.5	1078	1.7	3.1
3	962	1.2	2.5
3.5	860	0.7	2.1
4	769	0.3	1.7
4.5	689	Contact	1.3
5	618		1
5.5	555		0.7
6	499		0.4
6.5	450		0.2
7	406		0
7.5	368		Contact

Side 1 Photo

No photo required.

Side 2 Photo

No photo required.
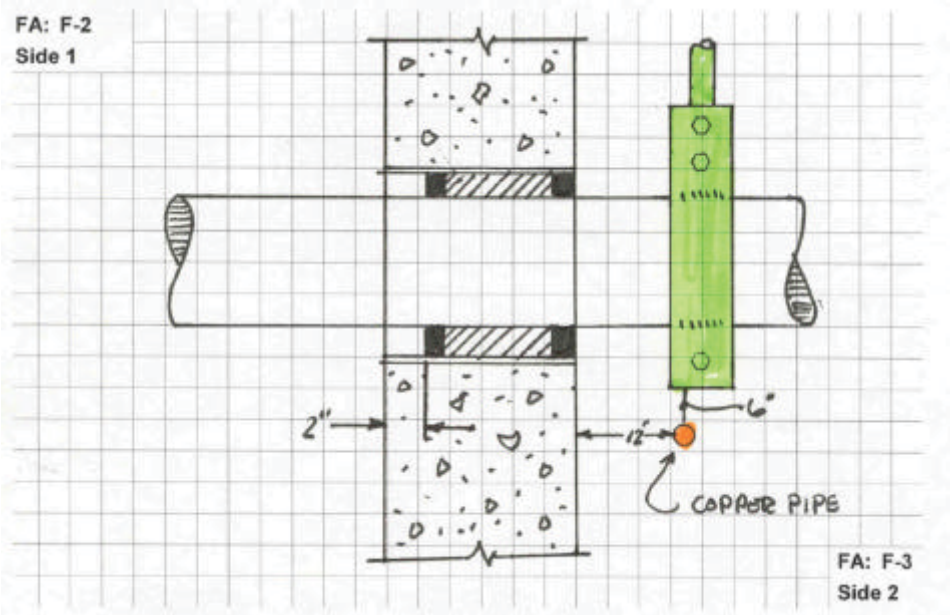
Sketch