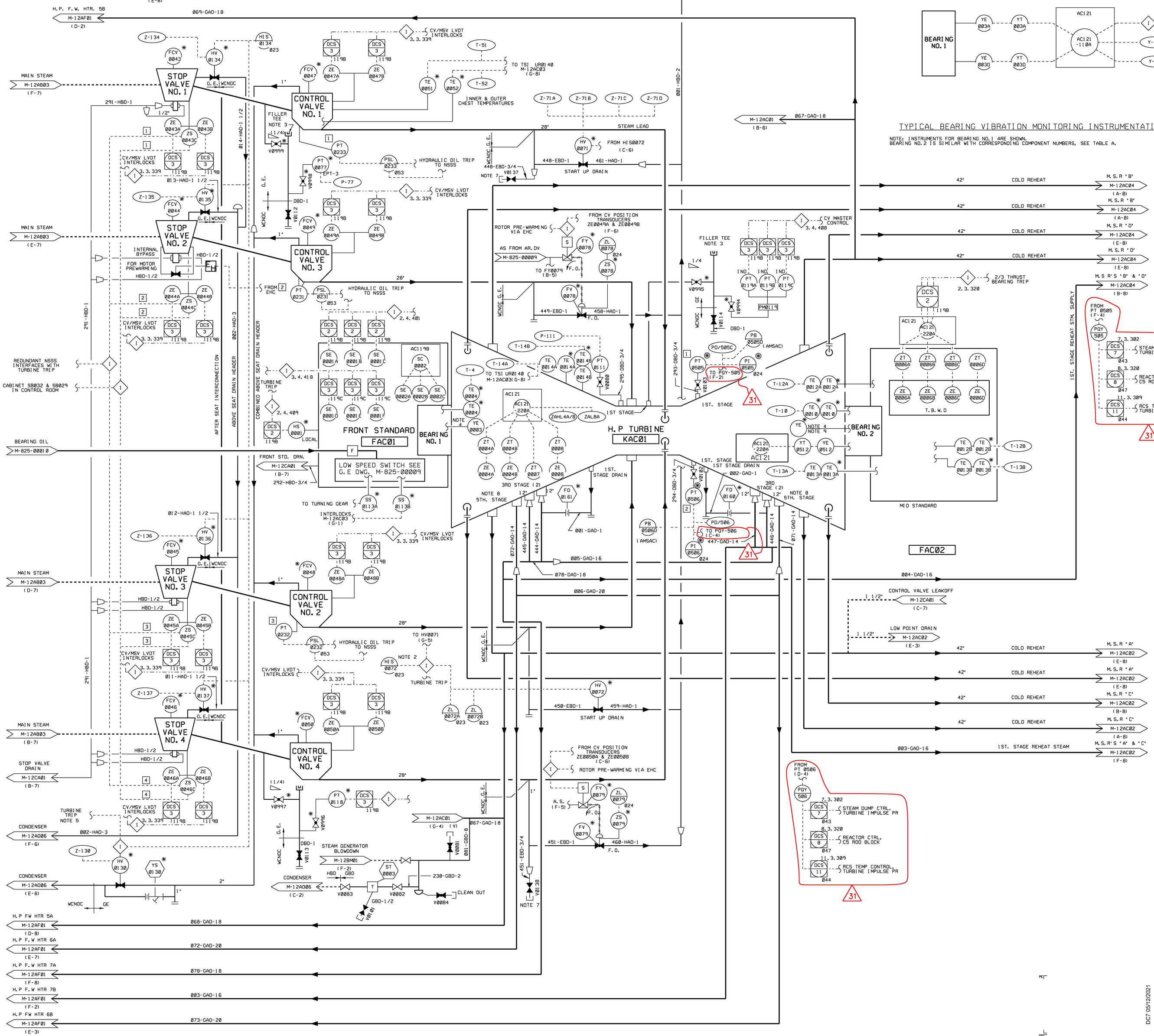

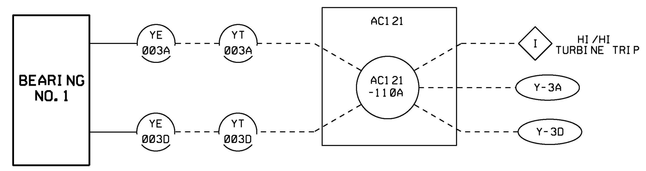

TABLE A

BEARING NO. 1	BEARING NO. 2
YE0003A	YE0006A
YE0003D	YE0006D
YT0003A	YT0006A
YT0003D	YT0006D
Y-3A	Y-6A
Y-3D	Y-6D
AC121-110A	AC121-110A

TYPICAL BEARING VIBRATION MONITORING INSTRUMENTATION

NOTE: INSTRUMENTS FOR BEARING NO.1 ARE SHOWN.
BEARING NO.2 IS SIMILAR WITH CORRESPONDING COMPONENT NUMBERS, SEE TABLE A.

NOTES

1. DELETED.
2. JOGGING CONTROL.
3. FOR PRESSURE TRANSMITTER PIPING INSTRUCTIONS AND FLUSHING REQUIREMENTS. SEE G.E. DWG. NO. 272A4312 (M-855-00152).
4. VIBRATION DETECTOR NOT USED FOR OPERATION BUT IS USED FOR TESTING.
5. TURBINE TRIP OPENS HV0130 DRAIN VALVE ONLY. HV0134 THRU HV0137 ARE MANUALLY CONTROLLED.
6. FOR EROSION/CORROSION CONCERNS, CARBON STEEL PIPING ON THIS P&ID MAY HAVE SECTIONS OF 2 1/4 CR-1 MOLY LOW-ALLOY STEEL AND/OR STAINLESS STEEL PIPING (OR VICE VERSA). FOR DETAILS, SEE ISOMETRICS.
7. INSTRUMENT CONNECTION IN PLACE FOR TURBINE PERFORMANCE TESTING.
8. NEW HP TURBINE ROTOR HAS 9 STAGES. THEY ARE NUMBERED 1, 2, 3, 3a, 4, 5, 5a, 6, & 7. EXTRACTION POINTS REMAIN AT 3rd STAGE AND 5th STAGE.
9. GE DETECTOR NO ASSET NUMBER ASSIGNED
10. THE FOLLOWING AC SYSTEM COMPONENTS ARE SHOWN ON M-12CH03:

ACFZ0001A
ACFZ0001B
ACFZ0002A
ACFZ0002B
ACFZ0003A
ACFZ0003B
ACHS0003
ACPE0003
ACPE0004
ACPT0130A
ACPT0130B
ACPT0130C
ACPT0131A
ACPT0131B
ACPT0131C

(*) SUPPLIED BY WESTINGHOUSE
(*) SUPPLIED BY G.E.

USAR FIG. 10.2-1-01

ESSENTIAL DRAWING

REVISED / ISSUED — INCORPORATED CHG. DOC. WIP-M-12AC01-030-A-1 — CHANGE PKG. NO. 013324

THIS DWG. SUPERSEDED BY — REV. — THIS DWG. SUPERSEDES — REV.

REVISION NOTES:

WOLF CREEK NUCLEAR OPERATING CORPORATION — ELECTRONIC APPROVAL

PIPING & INSTRUMENTATION DIAGRAM MAIN TURBINE

SCALE	DRAWING NUMBER	SHEET	REV
NONE	M-12AC01	1	31

DC7 05/12/2021

34X44 E SIZE

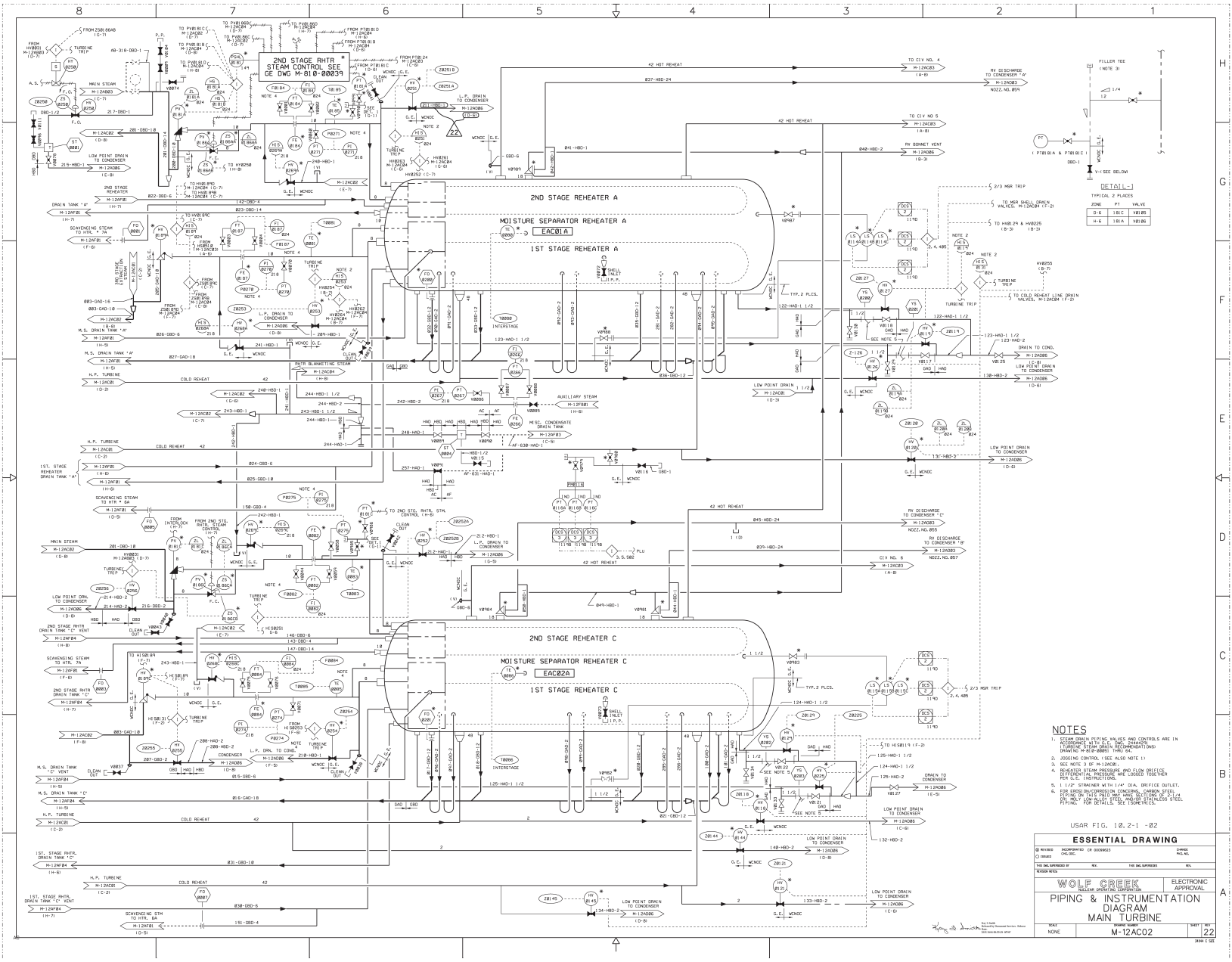
2ND STAGE RHTR STEAM CONTROL SEE GE DWG M-810-00039
2ND STAGE REHEATER A
MOISTURE SEPARATOR REHEATER A
EAC01A
1ST STAGE REHEATER A
2ND STAGE REHEATER C
MOISTURE SEPARATOR REHEATER C
EAC02A
1ST STAGE REHEATER C
MAIN STEAM
M-12AC03
LOW POINT DRAIN TO CONDENSER
M-12AC06
42 HOT REHEAT
TO CIV NO. 4
TO CIV NO. 5
TO CIV NO. 6
RV DISCHARGE TO CONDENSER "A"
RV DISCHARGE TO CONDENSER "B"
RV DISCHARGE TO CONDENSER "C"
RV BONNET VENT
FILLER TEE
DETAIL-J
TYPICAL 2 PLACES
ZONE | PT | VALVE
D-6 | 181C | V81B5
H-6 | 181A | V81B6
2/3 MSR TRIP
TO MSR SHELL DRAIN VALVES, M-12AC84 (F-2)
TO HV8129 & HV8225 (B-3)
TO COLD REHEAT LINE DRAIN VALVES, M-12AC84 (F-2)
TURBINE TRIP
DRAIN TO COND.
COLD REHEAT
H.P. TURBINE
M-12AC01
1ST. STAGE REHEATER DRAIN TANK "A"
M-12AF01
2ND STAGE REHEATER
M-12AF01
DRAIN TANK "A"
M-12AF01
SCAVENGING STEAM TO HTR. * 7A
M-12AF01
M.S. DRAIN TANK "A"
M-12AF01
RHTR BLANKETING STEAM
M-12AC84
AUXILIARY STEAM
M-12F581
MISC. CONDENSATE DRAIN TANK
M-12F583
SCAVENGING STEAM TO HTR. 6A
M-12AF01
2ND STAGE RHTR DRAIN TANK "C" VENT
M-12AF84
SCAVENGING STEAM TO HTR. 7A
M-12AF01
2ND STAGE RHTR DRAIN TANK "C"
M-12AF84
M.S. DRAIN TANK "C"
M-12AF84
1ST. STAGE RHTR. DRAIN TANK "C"
M-12AF84
1ST. STAGE RHTR. DRAIN TANK "C" VENT
M-12AF84
SCAVENGING STM TO HTR. 6A
M-12AF01
DRAIN TO CONDENSER
M-12AD86
LOW POINT DRAIN TO CONDENSER
M-12AD86
INTERSTAGE
TO HV8129 & HV8225 (B-3)
TO HS8119 (F-2)
TO HS8119 (F-2)
TO HS8129 (F-2)
TO HS8129 (F-2)
TO HS8129

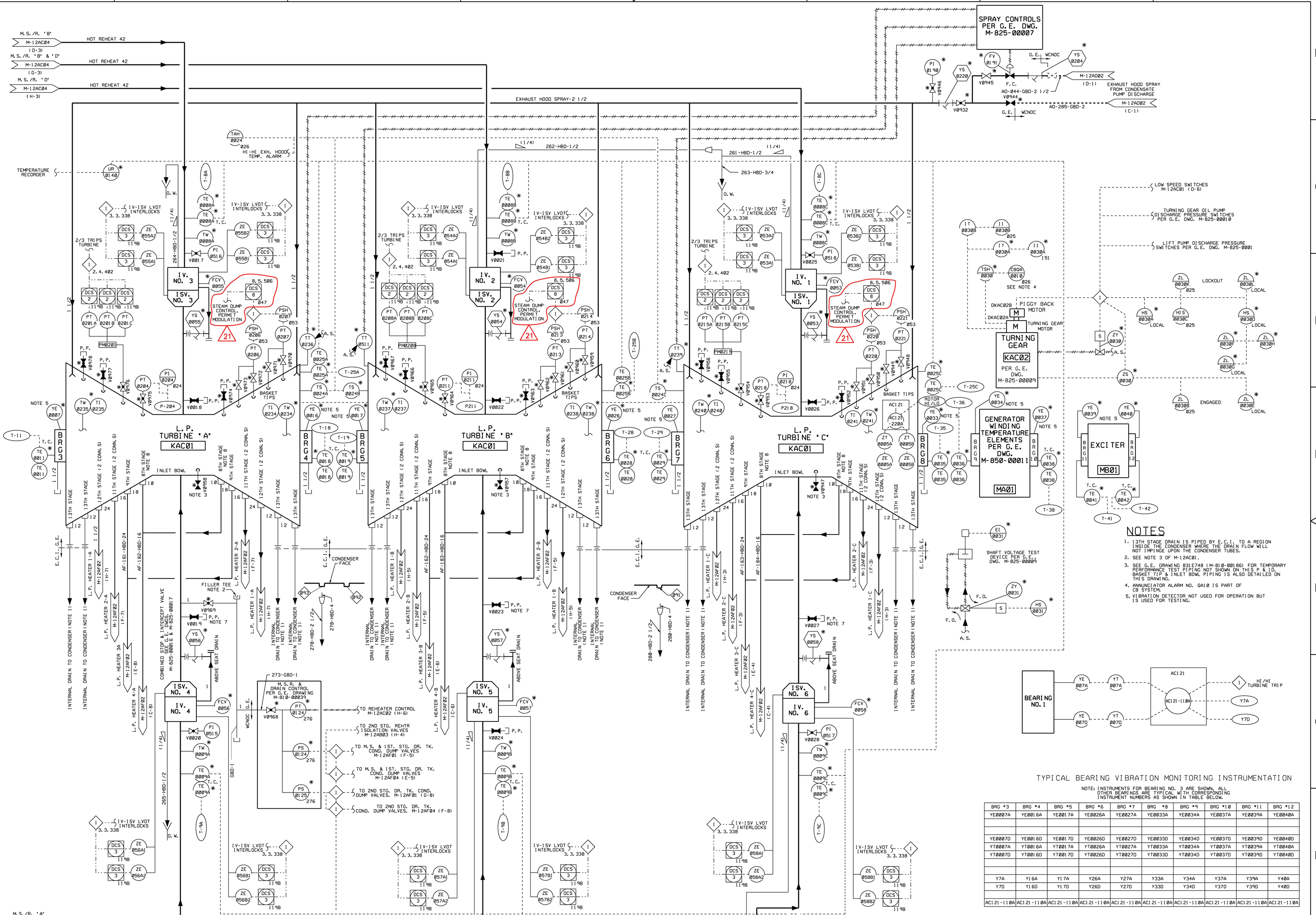

NOTES

1. 13TH STAGE DRAIN IS PIPED BY E.C.I. TO A REGION INSIDE THE CONDENSER WHERE THE DRAIN FLOW WILL NOT IMPINGE UPON THE CONDENSER TUBES.
2. SEE NOTE 3 OF M-12AC01.
3. SEE G.E. DRAWING 831E748 (M-810-00186) FOR TEMPORARY PERFORMANCE TEST PIPING NOT SHOWN ON THIS P & ID. BASKET TIP & INLET BOWL PIPING IS ALSO DETAILED ON THIS DRAWING.
4. ANNUNCIATOR ALARM NO. 0A10 IS PART OF CB SYSTEM.
5. VIBRATION DETECTOR NOT USED FOR OPERATION BUT IS USED FOR TESTING.

NOTES CONT.

6. FOR EROSION/CORROSION CONCERNS, CARBON STEEL PIPING ON THIS P & ID MAY HAVE SECTIONS OF 2 1/4 CR-1 MOLY LOW-ALLOY STEEL AND/OR STAINLESS STEEL PIPING. FOR DETAILS, SEE ISOMETRICS.
7. INSTRUMENT CONNECTION MAY BE INSTALLED FOR TURBINE PERFORMANCE TESTING.
8. NEW HP TURBINE ROTOR INCREASED NUMBER OF STAGES FROM 7 TO 9. THE NEW HP ROTOR STAGES ARE NUMBERED 1, 2, 3, 3a, 4, 5, 5a, 6 & 7. THEREFORE, THE LP TURBINE STAGES REMAIN NUMBERED THE SAME.

TYPICAL BEARING VIBRATION MONITORING INSTRUMENTATION

NOTE: INSTRUMENTS FOR BEARING NO. 3 ARE SHOWN. ALL OTHER BEARINGS ARE TYPICAL WITH CORRESPONDING INSTRUMENT NUMBERS AS SHOWN IN TABLE BELOW.

BRG #3	BRG #4	BRG #5	BRG #6	BRG #7	BRG #8	BRG #9	BRG #10	BRG #11	BRG #12
YE0007A	YE0016A	YE0017A	YE0026A	YE0027A	YE0033A	YE0034A	YE0037A	YE0039A	YE0040A
YE0007D	YE0016D	YE0017D	YE0026D	YE0027D	YE0033D	YE0034D	YE0037D	YE0039D	YE0040D
YT0007A	YT0016A	YT0017A	YT0026A	YT0027A	YT0033A	YT0034A	YT0037A	YT0039A	YT0040A
YT0007D	YT0016D	YT0017D	YT0026D	YT0027D	YT0033D	YT0034D	YT0037D	YT0039D	YT0040D
Y7A	Y16A	Y17A	Y26A	Y27A	Y33A	Y34A	Y37A	Y39A	Y40A
Y7D	Y16D	Y17D	Y26D	Y27D	Y33D	Y34D	Y37D	Y39D	Y40D
AC121-110A	AC121-110A	AC121-110A	AC121-110A	AC121-110A	AC121-110A	AC121-110A	AC121-110A	AC121-110A	AC121-110A

ESSENTIAL DRAWING

REVISED / ISSUED — INCORPORATED CHG. DOC. WIP-M-12AC03-020-A-1 — CHANGE PKG. NO. 013324

THIS DWG. SUPERSEDED BY — REV. — THIS DWG. SUPERSEDES — REV.

REVISION NOTES:

WOLF CREEK NUCLEAR OPERATING CORPORATION — ELECTRONIC APPROVAL

PIPING & INSTRUMENTATION DIAGRAM MAIN TURBINE

SCALE	DRAWING NUMBER	SHEET	REV
NONE	M-12AC03	1	21

DC7 05/12/2021

34X44 E SIZE

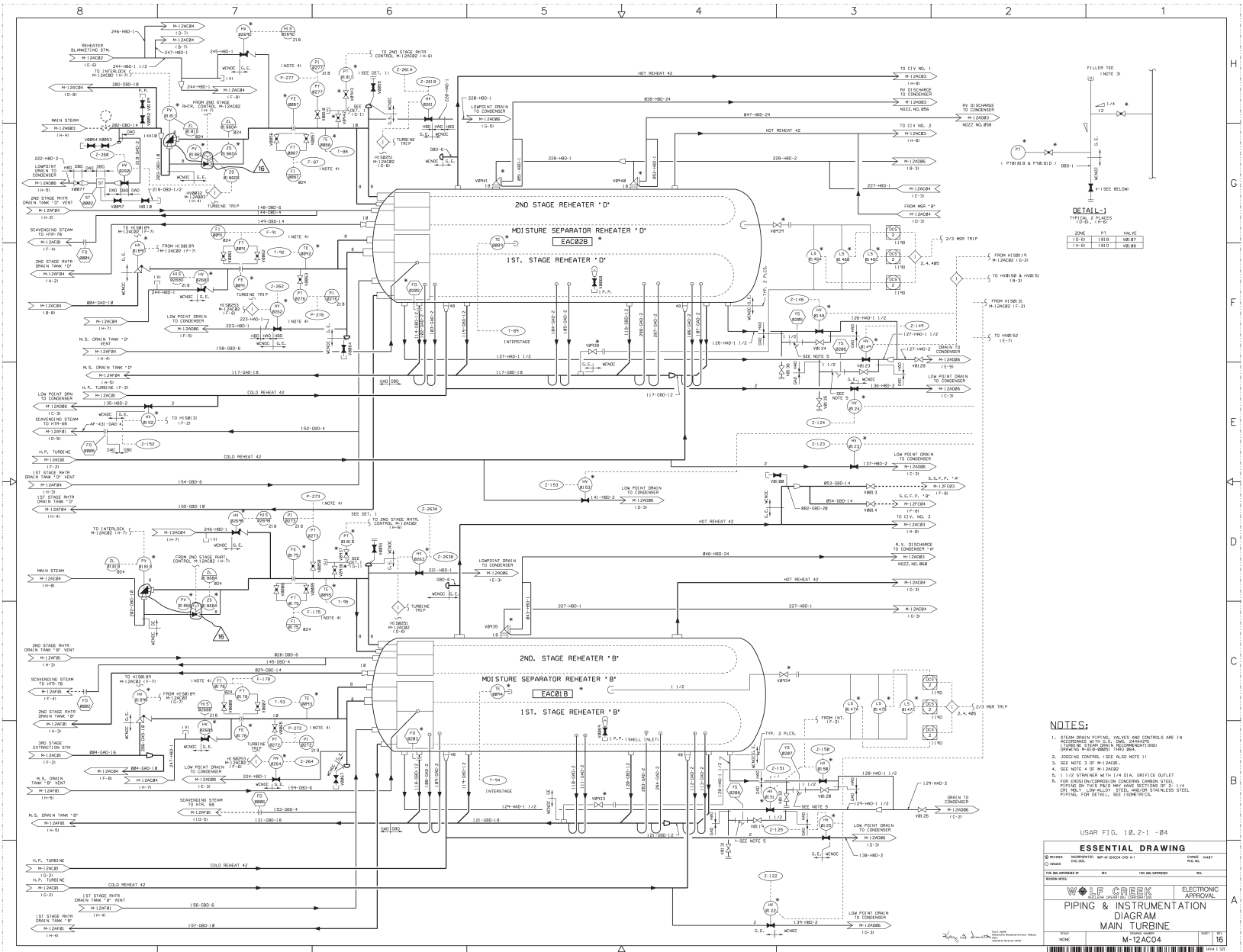

NOTES:

1. STEAM DRAIN PIPING, VALVES AND CONTROLS ARE IN ACCORDANCE WITH S.G. DWG. 244842D, (TURBINE STEAM DRAIN RECOMMENDATIONS) DRAWING M-01-0-00051 THRU 054.
2. JOGGING CONTROL (SEE ALSO NOTE 1)
3. SEE NOTE 3 OF M-12AC01.
4. SEE NOTE 4 OF M-12AC01.
5. 1 1/2 STRAINER WITH 1/4 DIA. ORIFICE OUTLET
6. FOR EROSION/CORROSION CONCERNS CARBON STEEL PIPING ON THIS PAGE MAY HAVE SECTIONS OF 2- 1/4 CR. MO. F. (LOW-ALLOY STEEL) AND/OR STAINLESS STEEL PIPING. FOR DETAILS, SEE ISOMETRICS.

USAR FIG. 10.2-1 -04

ESSENTIAL DRAWING

REVISED	INCORPORATED DAS-SOC	CHANGE	14487
ISSUED		PKG. NO.	
THIS DWG. SUPERSEDES	REV.	THIS DWG. SUPERSEDES	REV.
REVISION NOTES:			

WOLF CREEK GENERATING STATION — ELECTRONIC APPROVAL

PIPING & INSTRUMENTATION DIAGRAM MAIN TURBINE

SCALE	STANDARD NUMBER	SHEET	REV
NONE	M-12AC04	16	

M-12AC04-11-16

3444 1 GD

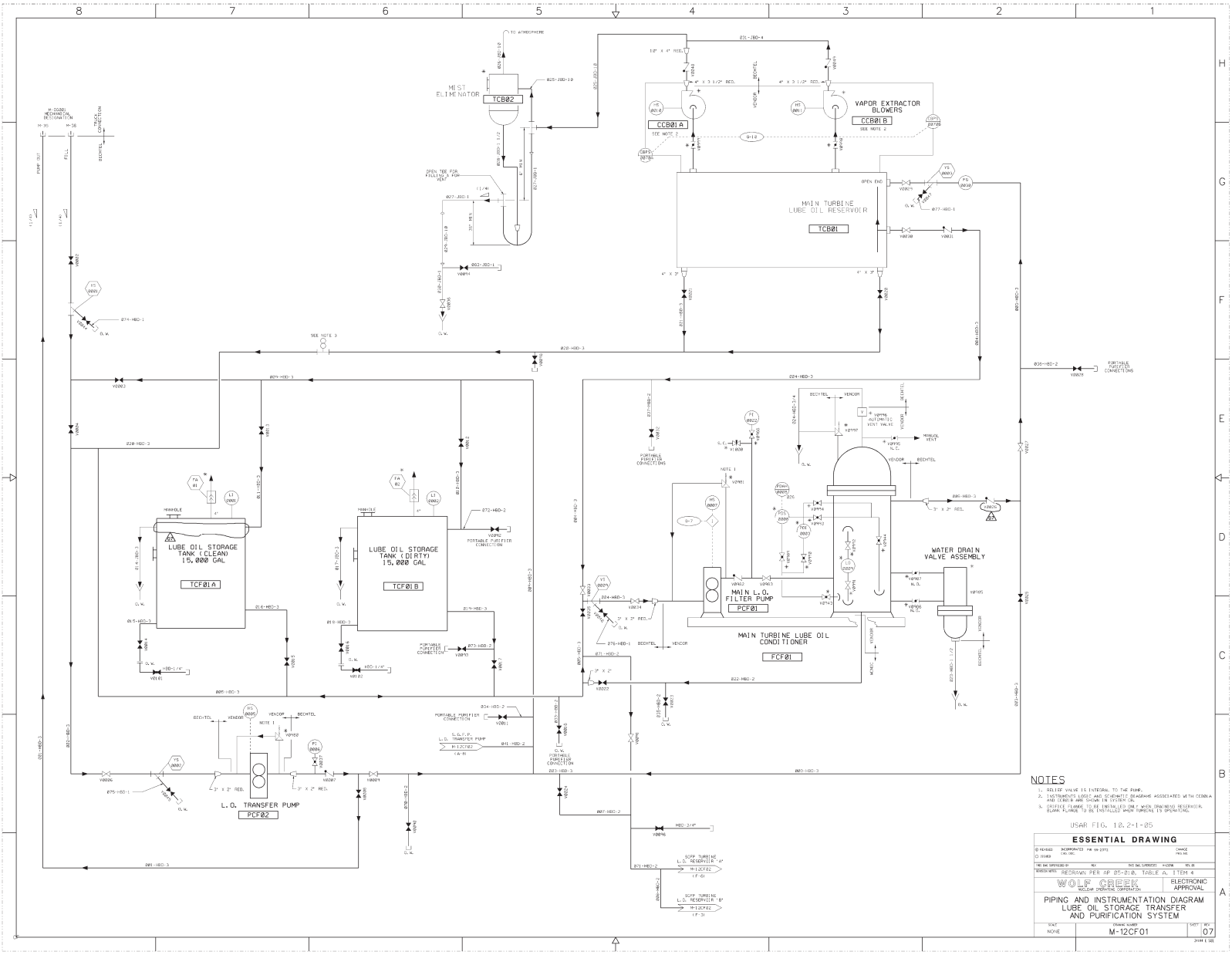

Released By Document Services Release Date: 09/18/00

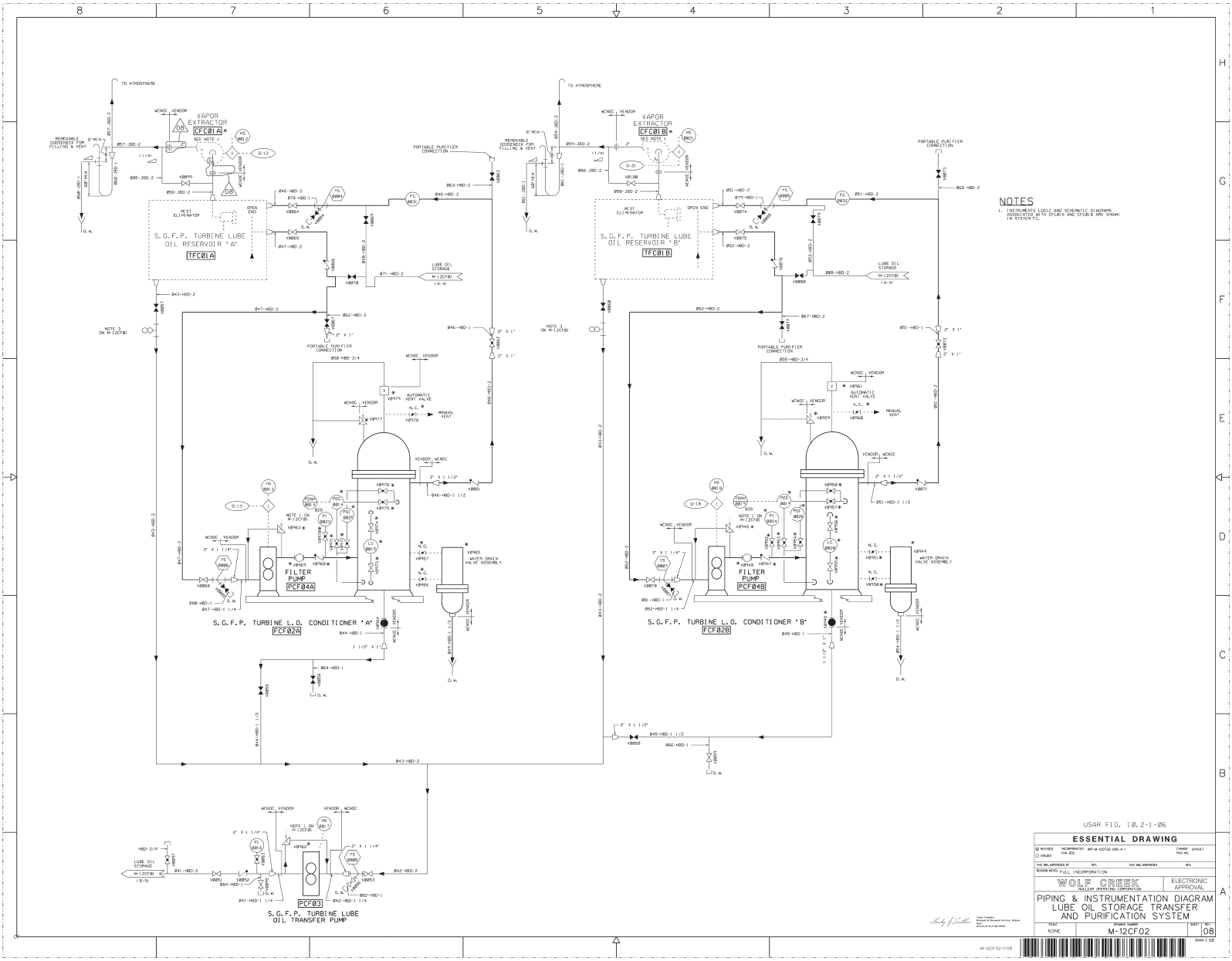

NOTES

1. INSTRUMENT LOGIC AND SCHEMATIC DIAGRAMS FOR PUMPS WITH CFC01A AND CFC01B ARE SHOWN IN SYSTEM 7C.

USAR FIG. 10.2-1-06

ESSENTIAL DRAWING

⊗ REVISED ○ ISSUED	INCORPORATED CHG. DOC.	WCP-M-02CF02-000-A-1	CHANGE DATA NO. 014047
THIS DWG. SUPERSEDES BY:	REV.	THIS DWG. SUPERSEDES:	REV.
REVISION NOTES: FULL INCORPORATION			

WOLF CREEK NUCLEAR OPERATING CORPORATION — ELECTRONIC APPROVAL

PIPING & INSTRUMENTATION DIAGRAM
LUBE OIL STORAGE TRANSFER
AND PURIFICATION SYSTEM

SCALE	DRAWING NUMBER	SHEET	REV
NONE	M-12CF02		08

Stanley A. Scottlan

Stanley A. Scottlan
Manager Engineering Services, Wolf Creek
Date 2/2/2010
Expiration Date 2/2/2010
Wolf Creek Nuclear Operating Corporation

M-12CF02-H-08

XXXX X SIZE

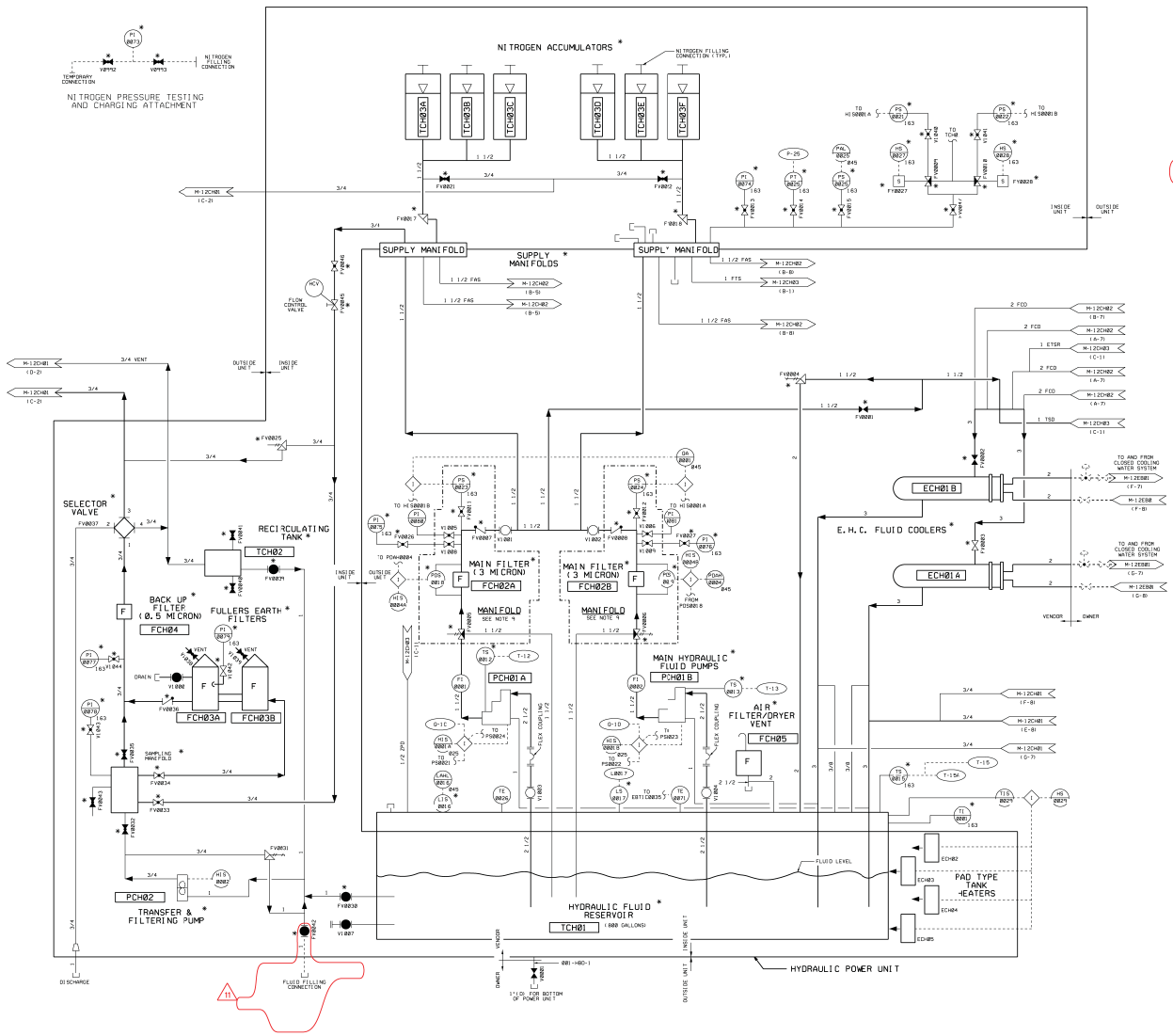

NOTES

1. M-12CH01 INFORMATION FROM GE DRAWING (YND. PRN. NUMBER M-825-00002 AND S-825-0CH01
2. M-12CH02 INFORMATION FROM GE DRAWING (YND. PRN. NUMBER M-825-00024.
3. FOR DETAILED DRAWING SEE M-825-00009 AND S-825-0CH02
4. FOR DETAILED DRAWING SEE M-825-00014 AND S-825-0CH03
5. FOR DETAILED DRAWING SEE M-825-00015 AND S-825-0CH04
6. FOR DETAILED DRAWING SEE M-825-00016 AND S-825-0CH05
7. FOR DETAILED DRAWING SEE M-825-00017 AND S-825-0CH06
8. THE CH SYSTEM I.E. T.G. SUPPORT SYSTEMS AS DEFINED IN THE GE SCOPE OF SUPPLY IS THE DESIGN OF GENERAL ELECTRIC. PA 13 (INFORMATION WAS TAKEN FROM THE O.L.C. MANUAL REFERENCED IN NOTES 1 AND 2 AS WELL AS GE INSTRUCTION MANUAL MI 838 00229, BOOK II.
9. FOR DETAILED DRAWING OF VERTICAL PUMP MOTOR MANIFOLD UPGRADE SEE DWG. M-2003A-00002 (HYDRA-POWER SYSTEM DWG.C61050).
10. DELETED.

11

USAR FIG. 10.2-1-7

ESSENTIAL DRAWING

⊗ AS BUILT ○ PRELIMS	INCORPORATED DCN. DOC.
CHANGE PKG. NO.	
THIS DWG. SUPERSEDES BY	REV.
THIS DWG. SUPERSEDES	REV.
REVISION NOTES	REVISED TO REMOVE TCC SYS CH-12).

WOLF CREEK NUCLEAR OPERATING CORPORATION

ELECTRONIC APPROVAL

PIPING & INSTRUMENTATION DIAG. MAIN TURBINE CONTROL OIL SYSTEM

SCALE	ORIGINAL DRAWING	SHEET	REV
NONE	M-12CH01		11

24X44 E SIZE

NOTES

1. FOR NOTES SEE DRAWING M-12CH03.

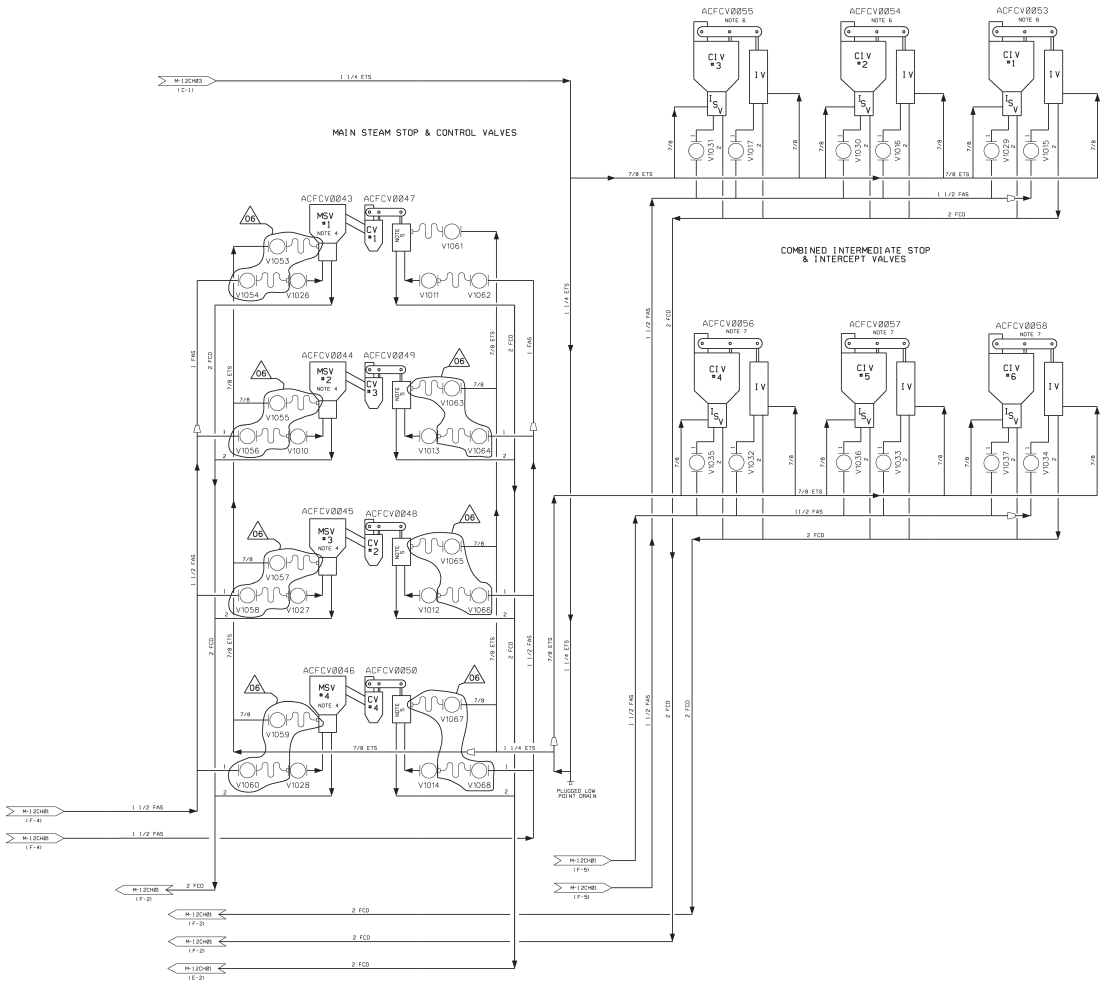

LEGEND

ETS	FLUID EMERGENCY TRIP SUPPLY
FAS	FLUID ACTUATOR SUPPLY
FCD	FLUID TO COOLER DRAIN
FTS	FLUID TRIP SYSTEM SUPPLY
TSD	TRIP SYSTEM DRAIN
ZPD	ZERO PRESSURE DRAIN
MSV	MAIN STOP VALVE
CV	CONTROL VALVE
CIV	COMBINED INTERMEDIATE VALVE
IV	INTERCEPT VALVE
ISV	INTERMEDIATE STOP VALVE
ETSR	EMERGENCY TRIP SYSTEM RETURN

USAR FIG. 10.2-1-8

ESSENTIAL DRAWING

⊙ REVISED	INCORPORATED CHG. DOC.	WP-M-12CH02-004-A-1	CHANGE 041723 PKG. NO.
⊙ ISSUED			
THIS DWG. SUPERSEDES OF		REV.	THIS DWG. SUPERSEDES REV.
REVISION NOTES			

WOLF CREEK NUCLEAR OPERATING CORPORATION

ELECTRONIC APPROVAL

PIPING & INSTRUMENTATION DIAG. MAIN TURBINE CONTROL OIL SYSTEM

SCALE	DRAWING NUMBER	SHEET	REV
NONE	M-12CH02	06	A

Kurt L Harris
Electronically Approved by Document Services, Edmond, Oklahoma
2024-11-07 10:38:15 -06:00

M-04M 2 SH

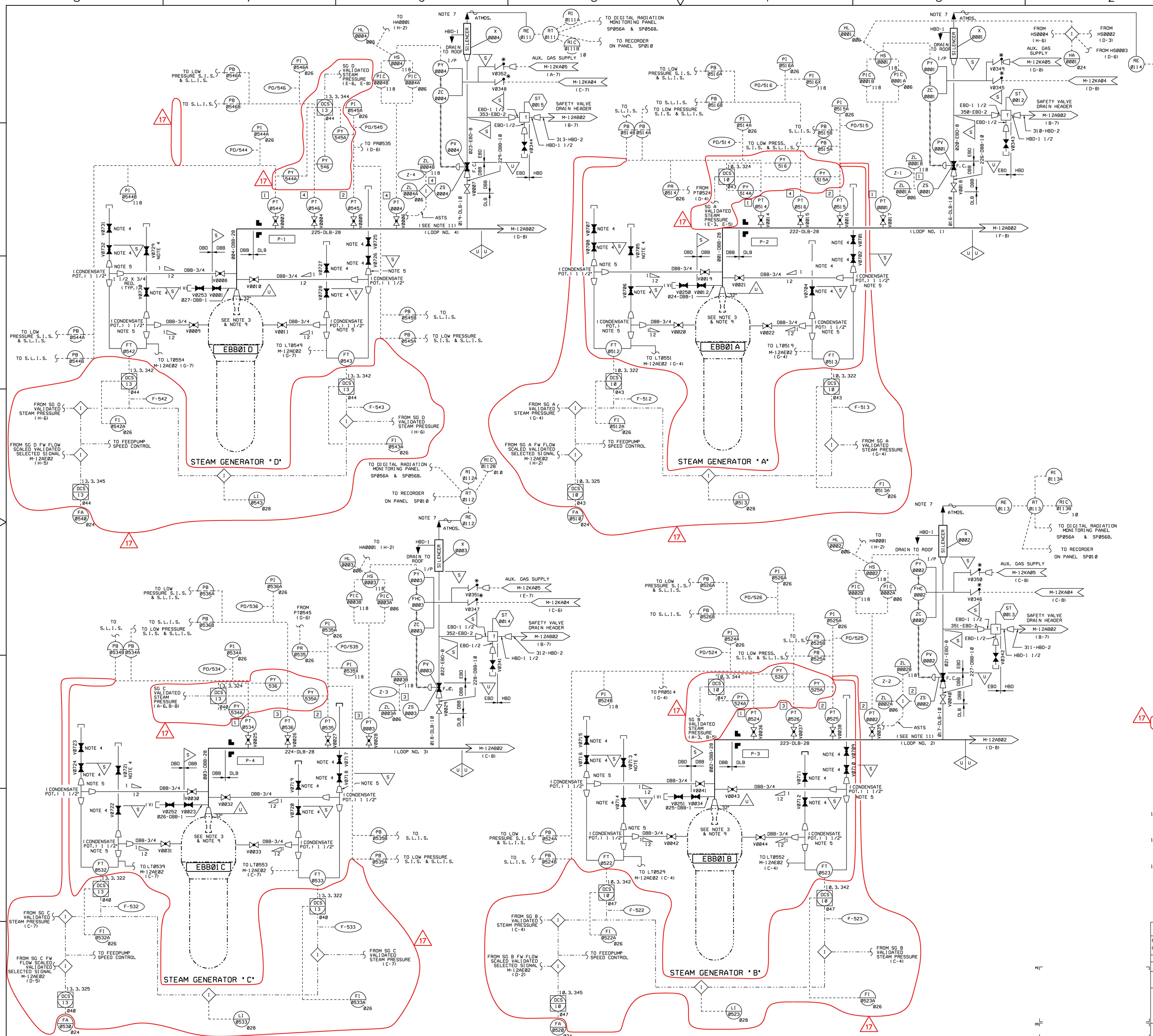

NOTES

1. ALL INSTRUMENTS NUMBERED 500 AND ABOVE ON M-12AB01 ARE FURNISHED WITH N.S.S.S. EQUIPMENT (OTHERWISE DESIGNATED AS Ⓢ)
2. REFERENCE DRAWING WESTINGHOUSE ENGINEERING PROCESS & CONTROL BLOCK DIAGRAMS WESTINGHOUSE DWG. 8756D37.
3. MAIN STEAM FLOW RESTRICTOR IS INTEGRAL WITH STEAM GENERATOR OUTLET NOZZLE.
4. SERIES 700 VALVES ARE INSTRUMENT TYPE VALVES IN ACCORDANCE WITH DRAWING 10466-J-07GI0.
5. DO NOT INSULATE CONDENSATE POT. SEE BECHTEL FOREIGN PRINT NO.S M-271-00001 AND M-771-00024 FOR REFERENCE. SEE WESTINGHOUSE PIP VOLUME 12-1, SECTION 3.0, PAGES 23 AND 24 FOR DESIGN DETAILS.
6. 17 DELETED
7. RADIATION DETECTOR VIEWS PLUME FROM PORV TAILPIPE.
8. WELDS IN ASME SECTION III CLASS 2 PIPING SYSTEMS WITHIN THE BOUNDARIES IDENTIFIED BY THE ⟨U⟩ SYMBOL MAY BE SUBJECT TO VOLUMETRIC EXAMINATION DURING THE PSI AND/OR ISI PROGRAMS. THE SPECIFIC WELDS WITHIN THESE BOUARIES AND THEIR INSPECTION REQUIREMENTS ARE DELINEATED IN THE PSI/ISI WORK PLANS PROVIDED UNDER SPECIFICATION 10466-M-189.
9. WELDS OF THE STEAM GENERATOR ARE SUBJECTED TO PSI/ISI EXAMINATION AS DELINEATED IN THE PSI/ISI WORK PLANS PROVIDED UNDER SPECIFICATION 10466-M-189.
10. ⟨U U⟩ SYMBOLS ARE PROVIDED FOR CLARITY TO INDICATE THAT ASME SECTION III CLASS 2 PIPING SYSTEMS WHICH ARE SUBJECT TO THE PSI/ISI PROGRAMS AND CONTINUE ONTO OTHER P&IDS.
11. ASTS (AUXILIARY SHUTDOWN TRANSFER SIGNAL) IS INITIATED AT RP118B BY RP-HIS-1 FOR SEPARATION GROUP 2 AND RP-HIS-2 FOR SEPARATION GROUP 4. THIS TRANSFERS CONTROL TO THE AUXILIARY SHUTDOWN PANEL WHILE ISOLATING THE MAIN CONTROL BOARD CONTROLS AND INDICATION.
12. FOR EROSION/CORROSION CONCERNS, CARBON STEEL PIPING ON THIS P&ID MAY HAVE SECTIONS OF 2 1/4 CR-1 MOLY LOW - ALLOY STEEL AND/OR STAINLESS STEEL PIPING. FOR DETAILS, SEE ISOMETRICS.

USAR FIG. 10.3-1-01

DC65 04/21/2021

ESSENTIAL DRAWING

◉ REVISED ○ ISSUED	INCORPORATED CHG. DOC.	WIP-M-12AB01-016-A-1 WIP-M-12AB01-016-B-1	CHANGE 020007 PKG. NO. 013324
THIS DWG. SUPERSEDES BY	REV.	THIS DWG. SUPERSEDES	REV.

REVISION NOTES: ALSO INCLUDES ADMIN CORRECTION PER AP 05-010 PAR 6.10.

WOLF CREEK NUCLEAR OPERATING CORPORATION — ELECTRONIC APPROVAL

PIPING & INSTRUMENTATION DIAGRAM MAIN STEAM SYSTEM

SCALE	DRAWING NUMBER	SHEET	REV
NONE	M-12AB01	1	17

34X44 E SIZE

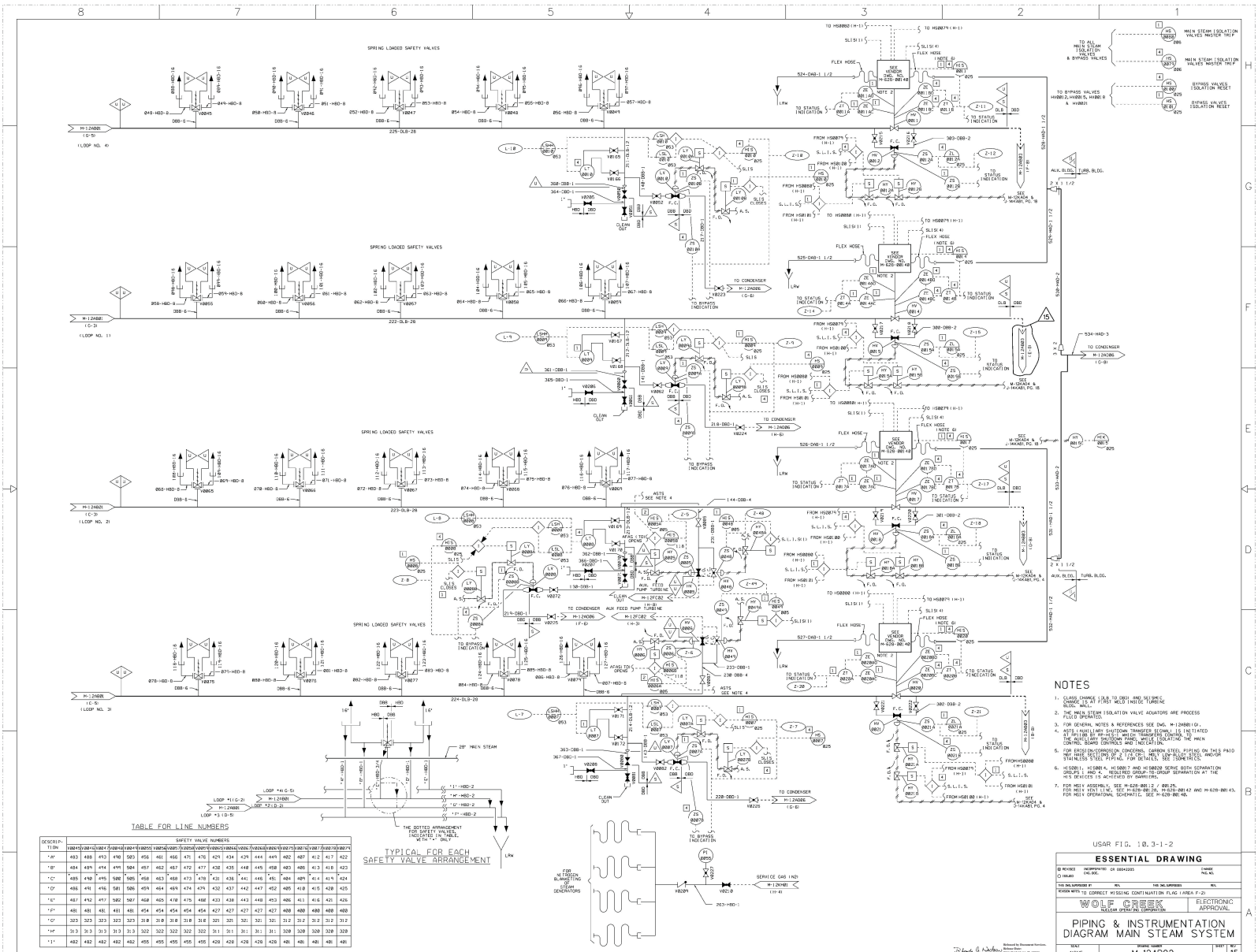

DESCRIPTION	SAFETY VALVE NUMBERS																			
	V0044	V0045	V0046	V0048	V0049	V0055	V0056	V0057	V0058	V0059	V0060	V0061	V0062	V0063	V0064	V0065	V0066	V0067	V0068	V0069
"A"	463	488	493	498	503	456	461	466	471	476	424	434	429	444	449	402	407	412	417	422
"B"	464	489	494	499	504	457	462	467	472	477	432	435	440	445	450	403	406	413	418	423
"C"	465	490	495	500	505	458	463	468	473	478	431	436	441	446	451	404	409	414	419	424
"D"	466	491	496	501	506	459	464	469	474	479	432	437	442	447	452	405	410	415	420	425
"E"	467	492	497	502	507	460	465	470	475	480	433	438	443	448	453	406	411	416	421	426
"F"	481	481	481	481	481	454	454	454	454	454	427	427	427	427	427	400	400	400	400	400
"G"	323	323	323	323	323	318	318	318	318	318	321	321	321	321	321	312	312	312	312	312
"H"	313	313	313	313	313	322	322	322	322	322	311	311	311	311	311	320	320	320	320	320
"I"	482	482	482	482	482	455	455	455	455	455	428	428	428	428	428	401	401	401	401	401

NOTES

1. CLASS CHANGE (PLB TO DBD) AND REISSUE. CHANGE IS AT FIRST WELD INSIDE TURBINE BLDG. WALL.
2. THE MAIN STEAM ISOLATION VALVE ACTUATORS ARE PROCESS FLUID OPERATED.
3. FOR GENERAL NOTES & REFERENCES SEE DWG. M-12AB01(D).
4. ASTS (AUXILIARY SHUTDOWN TRANSFER BELOW) IS INITIATED BY A LOSS OF SWITCHGEAR PANEL 1A. THIS CONTROL IS THE ALTERNATE SHUTDOWN MODE. TRANSFER OPERATING THE MAIN CONTROL BOARD CONTROLS AND INDICATION.
5. FOR EROSION/CORROSION CONCERNS, CARBON STEEL PIPING ON THIS P&ID MAY HAVE SECTIONS OF 2 1/2 CR-1 MOLY LOW-ALLOY STEEL AND/OR STAINLESS STEEL PIPING. FOR DETAILS, SEE ISOMETRICS.
6. HS0811, HS0814, HS0817 AND HS0820 SERVE BOTH SEPARATION FUNCTIONS. THE SEPARATION OF THE SAMPLE GROUP SEPARATION AT THE HS DEVICES IS ACHIEVED BY SWITCHES.
7. FOR MSIV ASSEMBLY, SEE M-628-0012 / 0012A.
FOR MSIV VENT LINE, SEE M-628-0012A, M-628-0014Z AND M-628-0014S.
FOR MSIV OPERATIONAL SCHEMATIC, SEE M-628-0014A.

USAR FIG. 10.3-1-2

ESSENTIAL DRAWING		
ID REVISED / CHG.NOC	INCORPORATED CHG.NOC: CR 00042205	CHANGE PKG.NO.
THIS DWG.SUPERSEDES BY:	REV.	THIS DWG.SUPERSEDES: REV.
REVISION NOTES: TO CORRECT MISSING CONTINUATION FLAG (AREA F-2)		

WOLF CREEK NUCLEAR OPERATING CORPORATION — ELECTRONIC APPROVAL

PIPING & INSTRUMENTATION DIAGRAM MAIN STEAM SYSTEM

SCALE	DRAWING NUMBER	SHEET
NONE	M-12AB02	15

30KM | SIZE

Released by Document Services, Release Date: 2011.06.29 10:04:47 -06'00'

M-12AB02-1-15

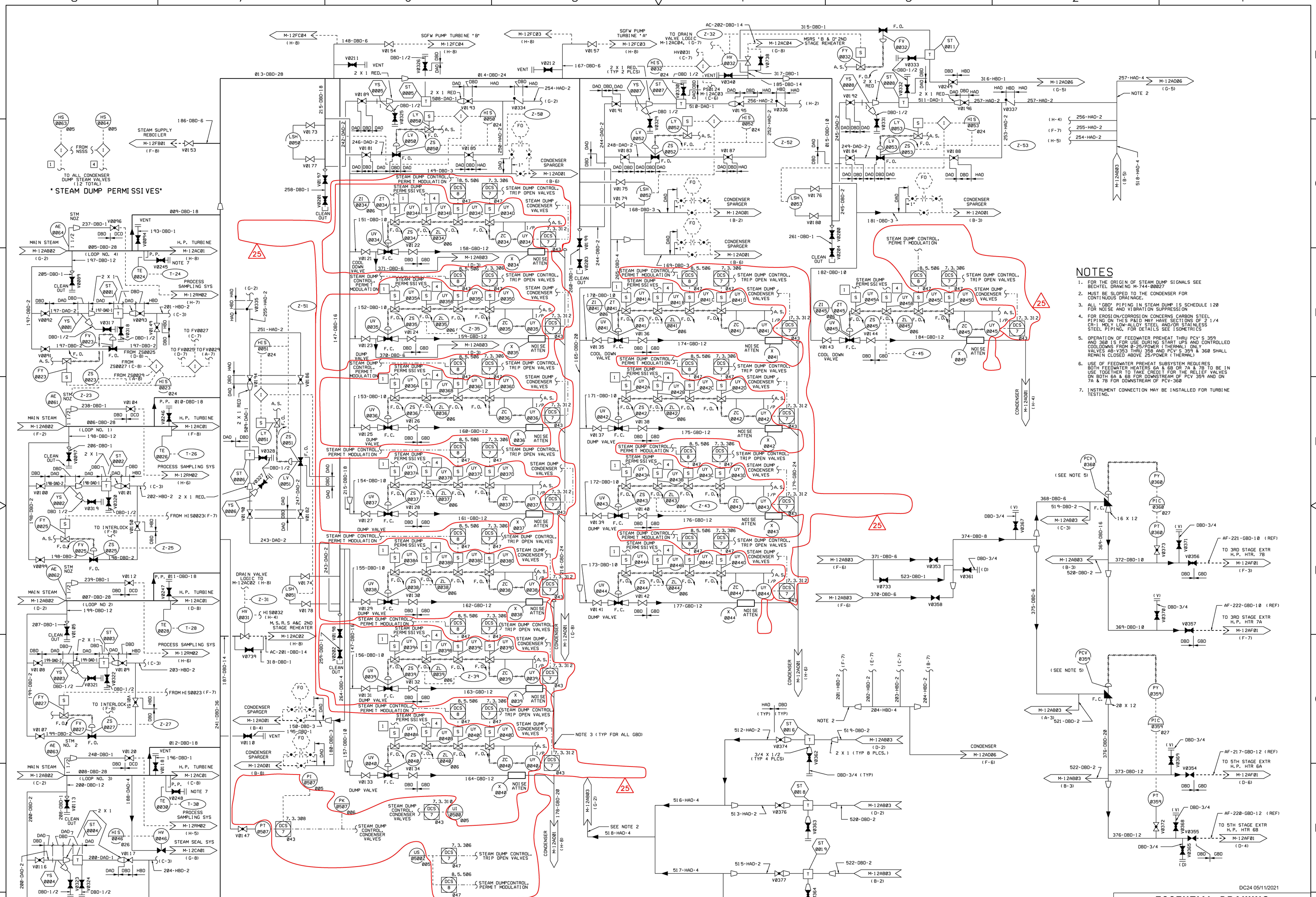

NOTES

1. FOR THE ORIGIN OF STEAM DUMP SIGNALS SEE BECHTEL DRAWING M-744-00027
2. MUST BE SLOPED TO THE CONDENSER FOR CONTINUOUS DRAINAGE.
3. ALL 'GBD' PIPING IN STEAM DUMP IS SCHEDULE 120 FOR NOISE AND VIBRATION SUPPRESSION
4. FOR EROSION/CORROSION CONCERNS CARBON STEEL PIPING ON THIS P&ID MAY HAVE SECTIONS OF 2 1/4 CR-1 MOLY LOW-ALLOY STEEL AND/OR STAINLESS STEEL PIPING. FOR DETAILS SEE ISOMETRICS
5. OPERATION OF FEEDWATER PREHEAT THRU PCV'S 359 AND 360 IS FOR USE DURING START UPS AND CONTROLLED COOLDOWNS FROM 0-25/POWER (THERMAL) ONLY. VALVES AB-V353 THRU 358 AND PCV'S 359 & 360 SHALL REMAIN CLOSED ABOVE 25/POWER (THERMAL)
6. USE OF FEEDWATER PREHEAT SUBSYSTEM REQUIRES BOTH FEEDWATER HEATERS 6A & 6B OR 7A & 7B TO BE IN USE TOGETHER TO TAKE CREDIT FOR THE RELIEF VALVES ON BOTH 6A & 6B FOR DOWNSTREAM OF PCV 359 AND ON 7A & 7B FOR DOWNSTREAM OF PCV-360
7. INSTRUMENT CONNECTION MAY BE INSTALLED FOR TURBINE TESTING.

DC24 05/11/2021

ESSENTIAL DRAWING

REVISED / ISSUED — INCORPORATED CHG. DOC. WIP-M-12AB03-024-A-1 — CHANGE PKG. NO. 13324

THIS DWG. SUPERSEDED BY — REV. — THIS DWG. SUPERSEDES — REV.

REVISION NOTES:

WOLF CREEK NUCLEAR OPERATING CORPORATION — ELECTRONIC APPROVAL

PIPING AND INSTRUMENTATION DIAGRAM MAIN STEAM SYSTEM

SCALE	DRAWING NUMBER	SHEET	REV
NONE	M-12AB03		25

34X44 E SIZE

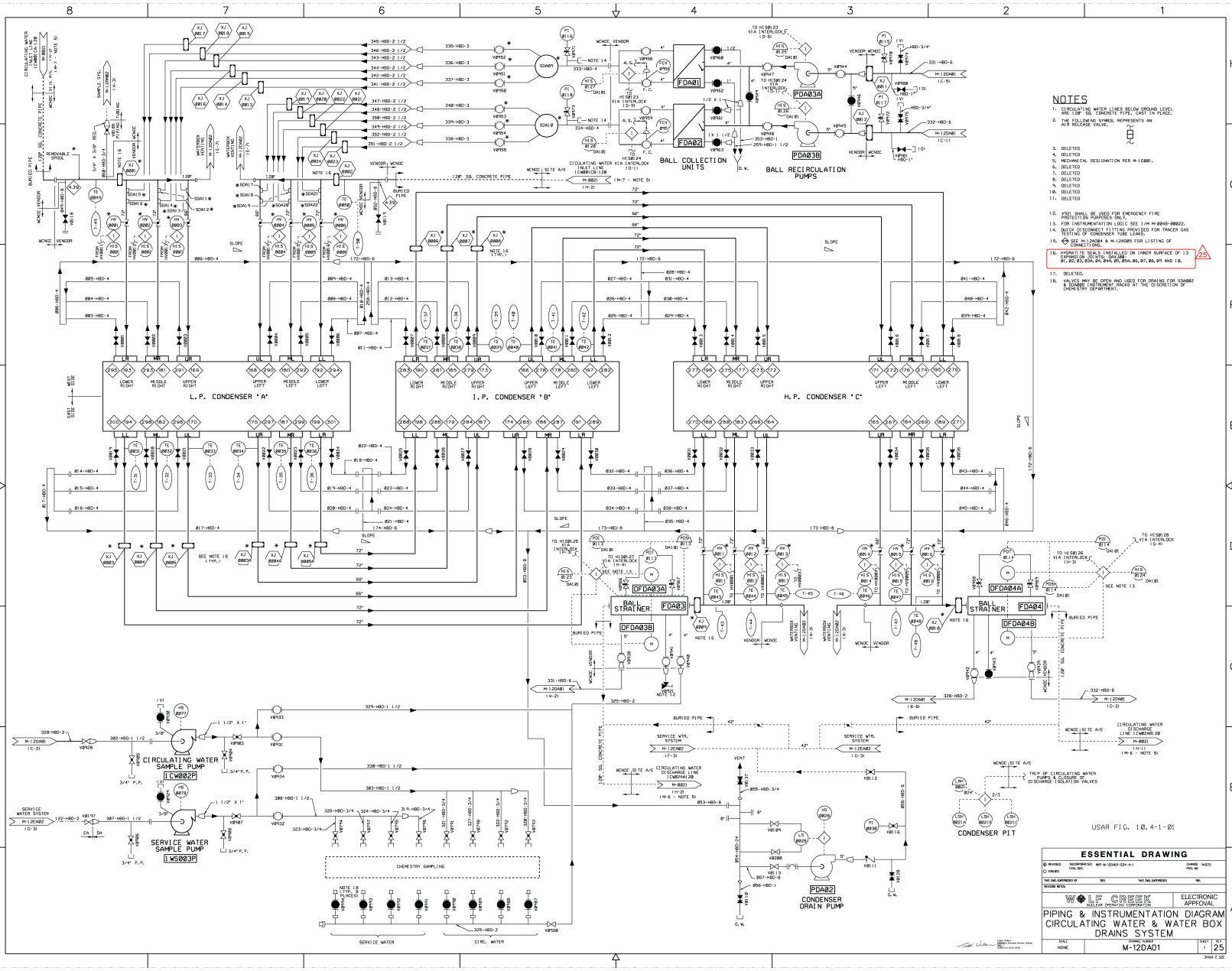
L.P. CONDENSER 'A'
I.P. CONDENSER 'B'
H.P. CONDENSER 'C'
BALL COLLECTION UNITS
BALL RECIRCULATION PUMPS
BALL STRAINER
CIRCULATING WATER SAMPLE PUMP
SERVICE WATER SAMPLE PUMP
CONDENSER DRAIN PUMP
CONDENSER PIT
CHEMISTRY SAMPLING
SERVICE WATER
CIRC. WATER
NOTES
1. CIRCULATING WATER LINES BELOW GROUND LEVEL ARE 12Ø" SSL CONCRETE PIPE, CAST IN PLACE.
2. THE FOLLOWING SYMBOL REPRESENTS AN AIR RELEASE VALVE.
3. DELETED
4. DELETED
5. MECHANICAL DESIGNATION PER M-1GB01.
6. DELETED
7. DELETED
8. DELETED
9. DELETED
10. DELETED
11. DELETED
12. VQ01 SHALL BE USED FOR EMERGENCY FIRE PROTECTION PURPOSES ONLY.
13. FOR INSTRUMENTATION LOGIC SEE J.M M-0040-00023.
14. QUICK DISCONNECT FITTING PROVIDED FOR TRACER GAS TESTING OF CONDENSER TUBE LEAKS.
15. SEE M-12AQ04 & M-12AQ05 FOR LISTING OF CONNECTIONS.
16. HYDRATITE SEALS INSTALLED ON INNER SURFACE OF 13 EXPANSION JOINTS: DAF208, B1, B2, B3, B3A, B4, B4A, B5, B5A, B6, B7, B8, B9 AND 10.
17. DELETED.
18. VALVES MAY BE OPEN AND USED FOR DRAINS FOR SDAN02 & SDAN03 INSTRUMENT RACKS AT THE DISCRETION OF CHEMISTRY DEPARTMENT.
USAR FIG. 10.4-1-01
ESSENTIAL DRAWING
WOLF CREEK NUCLEAR OPERATING CORPORATION
ELECTRONIC APPROVAL
PIPING & INSTRUMENTATION DIAGRAM
CIRCULATING WATER & WATER BOX DRAINS SYSTEM
M-12DA01
25

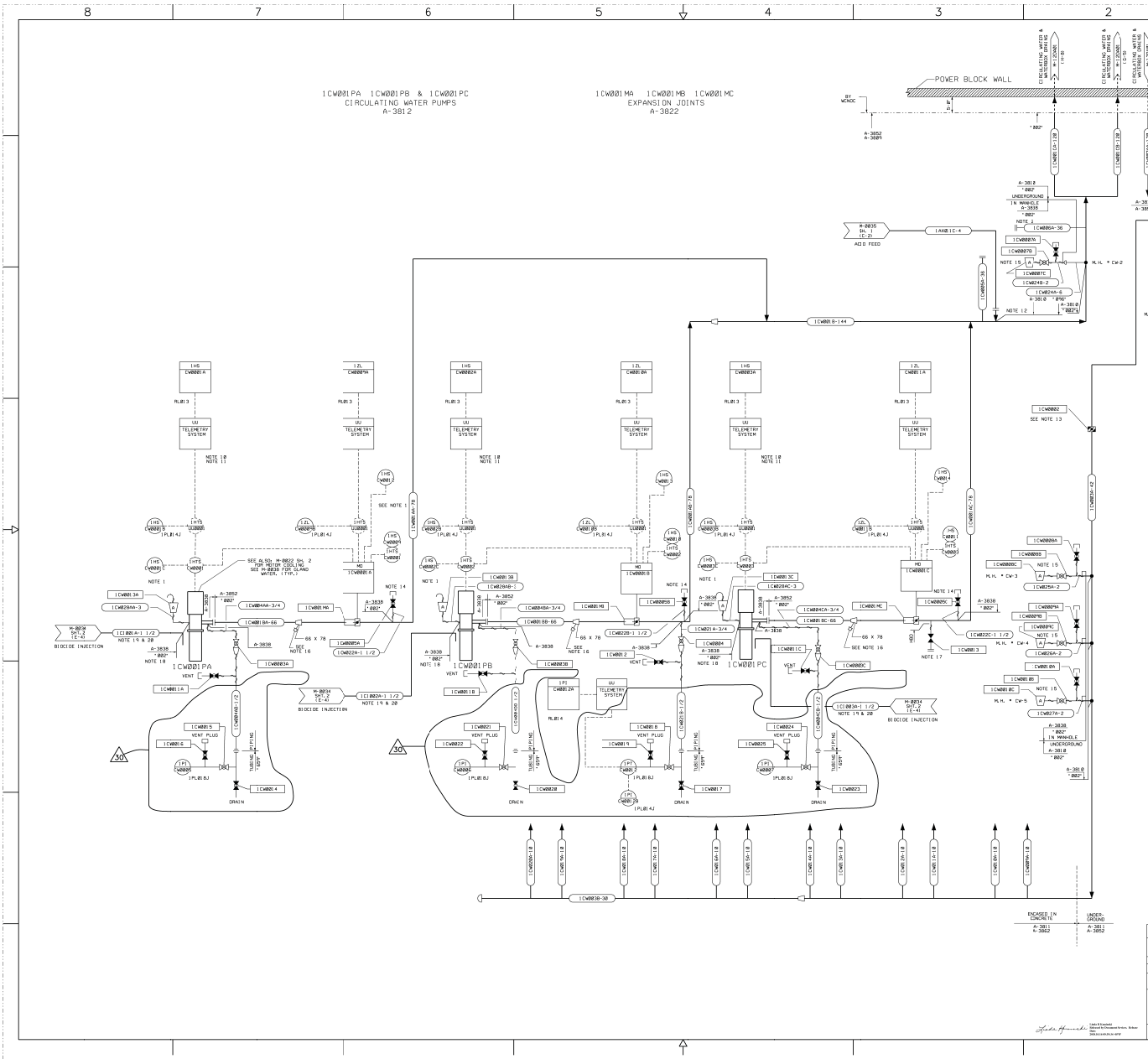

NOTES

1.) CIRCULATING WATER PUMPS HAVE LOCALLY MOUNTED INSTRUMENTATION AND CONTROLS FOR THE CIRCULATING WATER PUMPS AND DISCHARGE VALVES ARE LOCATED INSIDE THE SCREEN HOUSE.

2.) TOP OF INDICATED MANHOLES SHALL BE LOCATED ABOVE ELEVATION 2888'-9".

3.) INTERFACE LOCATIONS BETWEEN SITE AND POWER BLOCK CIRCULATING WATER SYSTEM ARE OPEN ON DRAWING M-52.

4.) CIRCULATING WATER SYSTEM BUTTERFLY VAL & EXPANSION JOINTS TO BE FURNISHED UNDER SPEC. A-3812. ALL OTHER VALVES AND FURN. BY A-3815.

5.) ALL INSTRUMENTATION TO BE FURNISHED UNDER SPECIFICATION A-3812 UNLESS A-3838 UNLESS OTHERWISE NOTED.

6.) WARMING LINE PIPING TO BE FURNISHED UNDER SPECIFICATION A-3811.

7.) MISCELLANEOUS UNDERGROUND PIPING TO BE FURNISHED UNDER SPECIFICATION A-3818.

8.) CIRCULATING WATER PIPING TO BE FURNISHED UNDER SPECIFICATION A-3815.

9.) MOTOR PROTECTIVE TRIPS ALARMED ON MAIN CONTROL BOARD AND INPUT TO PLANT COMPUTER. SEE DWG. M-251.

10.) ELECTRICAL INTERLOCKS ON CIRCULATING WATER PUMPS INCLUDE: PUMP TRIP ON HIGH CONDENSER PIT LEVEL (LEVEL SWITCH PROVIDED BY BECHTEL) PUMP TRIP ON LOW PRESSURE FOR STARTING CIRCULATING WATER PUMP FROM DLAND WATER PRESSURE SWITCH. SEE M-251 FOR DETAILS.

11.) NUMBERS WITHIN QUOTATION MARKS (EG. "002") REFER TO THE NUMBERS OF THE APPLICABLE S & L PIPING DESIGN TABLE.

12.) ACID DIFFUSER PIPE INSTALLED IN 1CW018-144 BY SPEC. A-3818. FURNISHED BY SPEC. A-3817.

13.) 1CW002 MUST BE CLOSED DURING RADIOACTIVE LIQUID RELEASES WHICH USE ONLY SERVICE WATER FLOW FOR DILUTION.

14.) HIGH POINT VENT FOR INITIAL FILL.

15.) AUTOMATIC AIR RELEASE VALVE.

16.) 2", 3000# THREDOLET W/PLUG

17.) 4" FLANGED CONNECTION PROVIDED FOR TEMPORARY CONDENSER TUBE CLEANING EQUIPMENT. HBD LINE CLASS PER MS-B2.

18.) THREADED CONNECTIONS SHALL BE UTILIZED FOR PUMP COLUMN VENT PER KN03-B15. SEE MS-B2 PIPE CLASS HBG, NOTE 10.

19.) BIOCIDE INJECTION DIRECTLY INTO THE PUMP BAY, ABOVE THE SURFACE OF THE WATER.

20.) CI SYSTEM IS A NON-CONTROLLED SYSTEM, COMPONENTS ARE DESIGNED ASSET NUMBERS FOR CLARITY.

USAR FIG. 10.4-1-02

ESSENTIAL DRAWING

☒ REVISED	INCORPORATED CHG. NOC	CH# 0018767	CHANGE PKG. NO.
☐ ISSUED			
THIS DWG. SUPERSEDES BY		REV.	THIS DWG. SUPERSEDES REV.
REVISION NOTES:			

WOLF CREEK NUCLEAR OPERATING CORPORATION — ELECTRONIC APPROVAL

P&ID
CIRCULATING WATER SYSTEM (CW)

SCALE	DRAWING NUMBER	SHEET	REV
NONE	M-0021	1	30

Lotus & Associates
Approved for Personal Version. Release 3.1
2002.11.04.05.24-0700

24X44 C SIZE

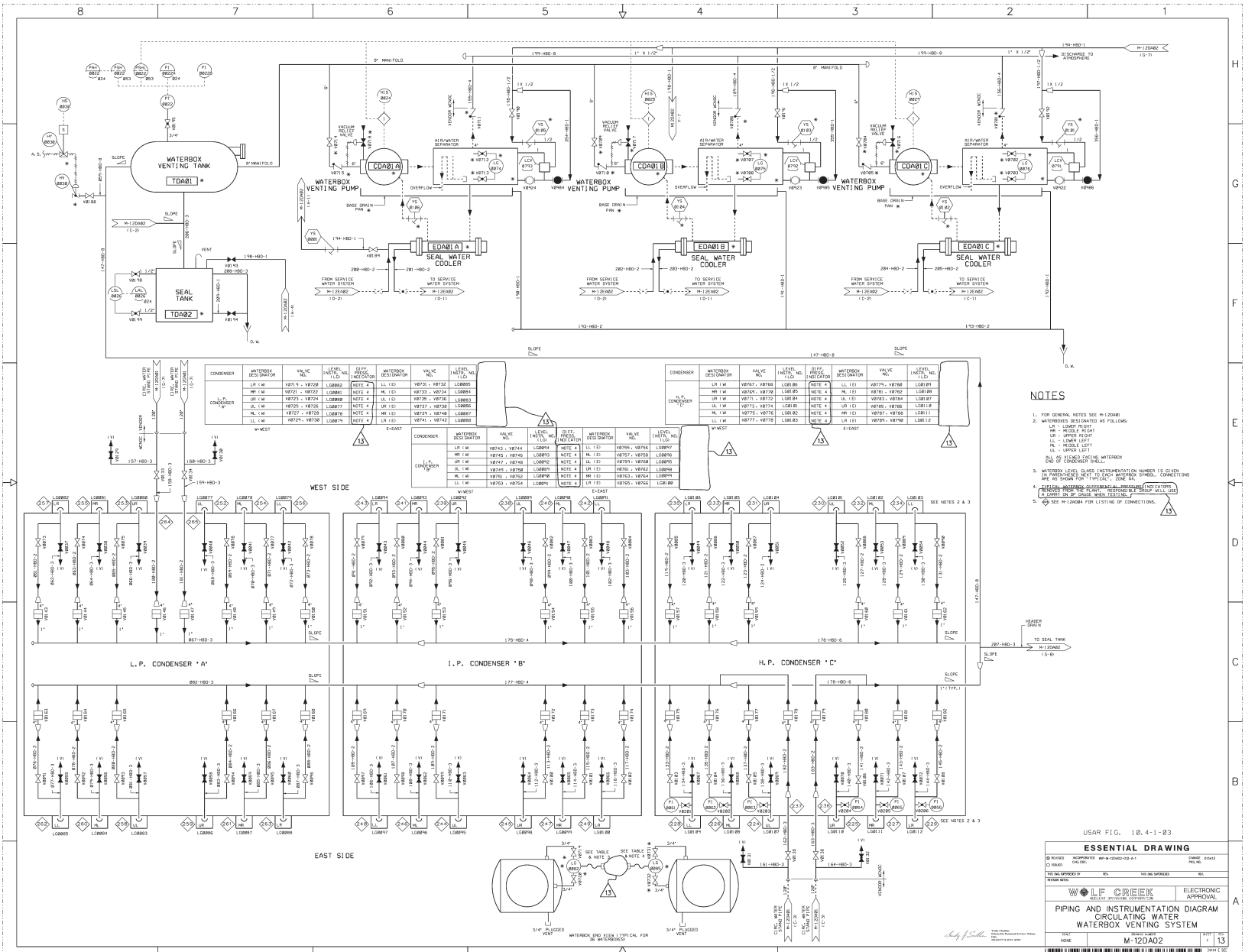

CONDENSER	WATERBOX DESIGNATOR	VALVE NO.	LEVEL INDTR. NO. (LG)	DIFF. PRESS. INDICATOR	WATERBOX DESIGNATOR	VALVE NO.	LEVEL INDTR. NO. (LG)
L.P. CONDENSER "A"	LR (W)	V0719, V0720	LG0002	NOTE 4	LL (E)	V0733, V0732	LG0005
	MR (W)	V0721, V0722	LG0001	NOTE 4	ML (E)	V0733, V0734	LG0004
	UR (W)	V0723, V0724	LG0000	NOTE 4	UL (E)	V0735, V0736	LG0003
	UL (W)	V0725, V0726	LG0077	NOTE 4	UR (E)	V0737, V0738	LG0006
	ML (W)	V0727, V0728	LG0078	NOTE 4	MR (E)	V0739, V0740	LG0007
	LL (W)	V0729, V0730	LG0079	NOTE 4	LR (E)	V0741, V0742	LG0008

W=WEST E=EAST

CONDENSER	WATERBOX DESIGNATOR	VALVE NO.	LEVEL INDTR. NO. (LG)	DIFF. PRESS. INDICATOR	WATERBOX DESIGNATOR	VALVE NO.	LEVEL INDTR. NO. (LG)
H.P. CONDENSER "C"	LR (W)	V0767, V0768	LG0105	NOTE 4	LL (E)	V0779, V0780	LG0109
	MR (W)	V0769, V0770	LG0106	NOTE 4	ML (E)	V0781, V0782	LG0108
	UR (W)	V0771, V0772	LG0104	NOTE 4	UL (E)	V0783, V0784	LG0107
	UL (W)	V0773, V0774	LG0101	NOTE 4	UR (E)	V0785, V0786	LG0110
	ML (W)	V0775, V0776	LG0102	NOTE 4	MR (E)	V0787, V0788	LG0111
	LL (W)	V0777, V0778	LG0103	NOTE 4	LR (E)	V0789, V0790	LG0112

W=WEST E=EAST

CONDENSER	WATERBOX DESIGNATOR	VALVE NO.	LEVEL INDTR. NO. (LG)	DIFF. PRESS. INDICATOR	WATERBOX DESIGNATOR	VALVE NO.	LEVEL INDTR. NO. (LG)
I.P. CONDENSER "B"	LR (W)	V0743, V0744	LG0014	NOTE 4	LL (E)	V0755, V0756	LG0017
	MR (W)	V0745, V0746	LG0013	NOTE 4	ML (E)	V0757, V0758	LG0016
	UR (W)	V0747, V0748	LG0012	NOTE 4	UL (E)	V0759, V0760	LG0015
	UL (W)	V0749, V0750	LG0011	NOTE 4	UR (E)	V0761, V0762	LG0018
	ML (W)	V0751, V0752	LG0010	NOTE 4	MR (E)	V0763, V0764	LG0019
	LL (W)	V0753, V0754	LG0009	NOTE 4	LR (E)	V0765, V0766	LG0020

W=WEST E=EAST

NOTES

1. FOR GENERAL NOTES SEE M-12DA00
2. WATERBOXES DESIGNATED AS FOLLOWS:
   LR - LOWER RIGHT
   MR - MIDDLE RIGHT
   UR - UPPER RIGHT
   LL - LOWER LEFT
   ML - MIDDLE LEFT
   UL - UPPER LEFT
   ALL AS VIEWED FACING WATERBOX END OF CONDENSER SHELL.
3. WATERBOX LEVEL SEE INSTRUMENTATION NUMBER IS GIVEN IN PARENTHESES. SEE ALSO EACH WATERBOX SYMBOL. CONNECTIONS ARE AS SHOWN FOR "TYPICAL", ZONE 8A.
4. TYPICAL WATERBOX DIFFERENTIAL PRESSURE INDICATORS REMOVED FROM THE PLANT. RESPONSIBLE GROUP WILL USE A CARRY ON DP GAUGE WHEN TESTING.
5. SEE M-12AD8A FOR LISTING OF CONNECTIONS.

USAR FIG. 10.4-1-03

ESSENTIAL DRAWING

REVISED	INCORPORATE CHG.ORD.	WSF-M-12DA02-012-A-1	CHANGE 015413 PKG.NO.
CREATED			
THIS DWG. SUPERSEDES		REV.	THIS DWG. SUPERSEDES REV.
REVISION NOTES			

WOLF CREEK NUCLEAR OPERATING CORPORATION

ELECTRONIC APPROVAL

PIPING AND INSTRUMENTATION DIAGRAM
CIRCULATING WATER
WATERBOX VENTING SYSTEM

SCALE	DRAWING NUMBER	SHEET	REV
NONE	M-12DA02	1	13

3044 E NC
M-12DA02-1-13

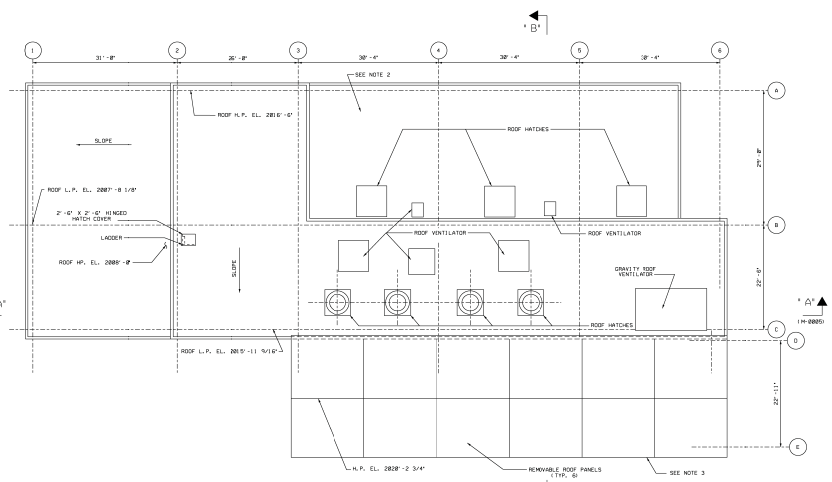

ROOF PLAN

ITEM	EQUIPMENT NUMBERS	EQUIPMENT NAME	
1	ISL007E	13.8kV/4.16kV AUXILIARY TRANSFORMER	D-5
2	ISL008E	13.8kV/4.16kV AUXILIARY TRANSFORMER	C-5
3	BLLETCO	———	
4	———	TEST CABINET	C-5
5	IPL001J	SUPERVISORY CABINET	C-5
6	———	GRID TEST BEX STORAGE SPACE	C-5
7	IPL014J	C.W. S14, STANDBY CONTROL PANEL	C-5
8	———	PULL BOX TO M.H.	C-5
9A 9B	ISL010E ISL007E	4160V SWITCHGEAR	C-4 C-5
10A 10B	ISL004E ISL008E	13.8kV SWITCHGEAR	D-5
11	ISL010E ISL015E	480V TRANSFORMER & SWITCHGEAR	D-4
12	ISL014E ISL015E	480V TRANSFORMER & SWITCHGEAR	D-4
13	———	4kV POWER FD PULLBOX TO MOTORS	C-4
14	———	480V AUXILIARY FD CONTROL PULLBOX	C-4
15	———	DC DISTRIBUTION CABINET	C-5
16	———	LIGHTING CABINET	D-4
17	ISL021E	480V MCC	D-4
18	ISL022E	480V MCC	D-4
19	———	13.8kV POWER FEED PLBX TO EAST SIDE MTRS	D-4
20	IPL006J	DIESEL DRIVEN FIRE PUMP CONTROLLER	C-2
21	IFP001PA	DIESEL DRIVEN FIRE PUMP	C-2
22A 22B 22C	ICW001PA ICW001PB ICW001PC	CIRCULATING WATER PUMP	D-3 D-3 D-2
23A 23B	IWS001FA IWS001FB	SERVICE WATER STRAINER	D-4
24A 24B 24C	IWS001PA IWS001PB IWS001PC	SERVICE WATER PUMP	C-3 C-3 C-2
25	IWS002P	LOW FLOW & START-UP SERVICE WATER PUMP	C-3

ITEM	EQUIPMENT NUMBERS	EQUIPMENT NAME	
26	IFP001PA	MOTOR DRIVEN FIRE PUMP	C-2
27	IFP002P	JOCKEY FIRE PUMP	D-2
28A 28B 28C 28D 28E 28F	ISW001FA ISW001FB ISW001FC ISW001FD ISW001FE ISW001FF	TRAVELLING SCREEN	C-3 C-3 C-3 C-3 C-2 C-2
29	———	———	
30A 30B	IS200ZCA IS200ZCB	INSTRUMENT AIR COMPRESSOR	D-3 C-3
31A 31B 31C 31D	ICL001SA ICL001SB ICL001SC ICL001SD	CHLORINATOR	C-4
32	IDO002T	849 GAL. DIESEL OIL DAY TANK	C-2
33	IPL008J	TRAVELLING SCREEN CONTROL PANEL	C-4
34A 34B 34C 34D	ICL001AA ICL001AB ICL001AC ICL002A	EVAPORATOR	C-4
35	———	———	
36	IPL013J	MOTOR DRIVEN FIRE PUMP CONTROLLER	C-2
37	IPL021J	CWSH PUMP ROOM HVAC PANEL	C-2
38	IPL020J	CWSH ELECTRICAL ROOM HVAC PANEL	C-4
39	IPL007J	JOCKEY FIRE PUMP CONTROLLER	C-2
40	IPL009J	SERVICE WATER STRAINER CONTROL PANEL	D-4
41	IPL017J	CHLORINATION CONTROL PANEL	C-4
42	IPL045J	MOTOR DRIVEN FIRE PUMP AUXILIARY CABINET	C-2
43	IPL015J	CW LOCAL INSTRUMENT PANEL	D-2
44	———	———	
45	IPL005J	DIESEL FIRE PUMP INSTRUMENT PANEL	C-2
46	IPL004J	CWSH SERVICE AIR COMPRESSOR PANEL	C-4
47	IS200ZD	SERVICE AIR REFRIGERANT DRYER	C-4
48	IFP003T	SURGE PRESSURE SUPPRESSION TANK	C-2
49	IFP003P	BACKUP JOCKEY FIRE PUMP (SUBMERSIBLE)	C-3
50	IFP102J	BACKUP JOCKEY FIRE PUMP CONTROLLER	C-3
51	FP001	BACKUP JOCKEY FIRE PUMP TRANSFER SWITCH	D-4
52	FP002	DIESEL FIRE PUMP CONTROLLER POWER TRANSFER SWITCH	C-2
53	FP003	DIESEL FIRE PUMP ENGINE BLOCK HEATER POWER TRANSFER SWITCH	C-2
54	FP004	ALTERNATE POWER RECEPTACLES	C-4
55	IPL006J	MOTOR DRIVEN FIRE PUMP LOCAL CONTROL STATION	C-2

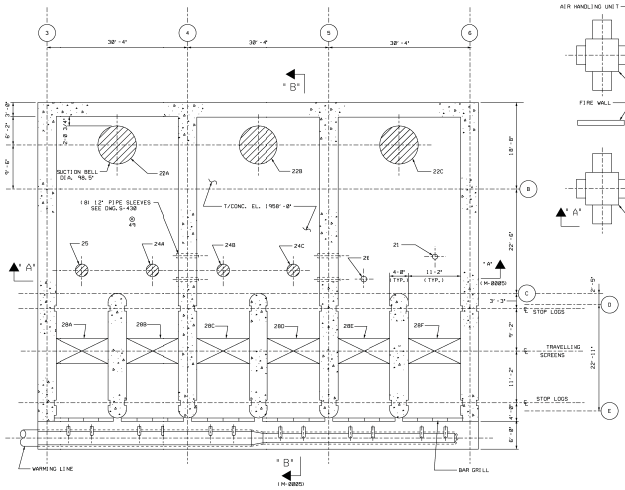

PLAN @ EL. 1958'-0"

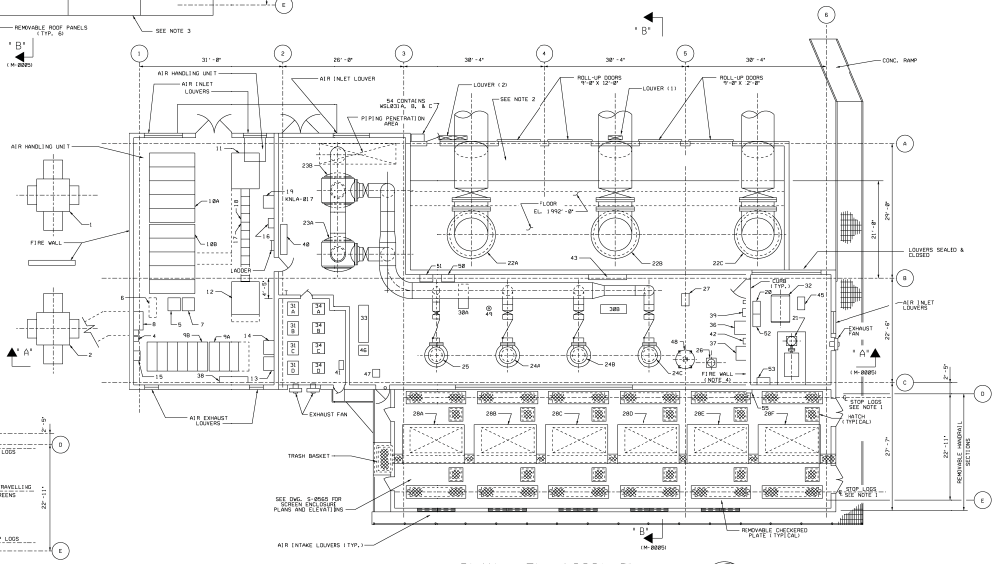

PLAN @ EL. 1992'-0"

USAR FIG. 10.4-1-04

NOTES

1. NO MORE THAN ONE TRAVELLING SCREEN BAY SHALL BE DEWATERED AT ONE TIME. PARTIAL OR COMPLETE DEWATERING OF THE SCREENHOUSE SUMP IS ABSOLUTELY PROHIBITED.
2. THIS SECTION IS NOT PART OF CIRCULATING WATER SCREENHOUSE. IT IS IDENTIFIED AS CIRCULATING WATER PUMP ENCLOSURE. (20.56)
3. THIS SECTION IS NOT PART OF CIRCULATING WATER SCREENHOUSE. IT IS IDENTIFIED AS CIRCULATING WATER TRAVELING SCREEN ENCLOSURE. (20.58).
4. FIRE WALL IS A VERMICULITE-FILLED CMU WALL. THE WALL IS NOT A FIRE WALL. THE WALL WILL BE ASBESTOS CONTAINING MATERIAL PER THE ANALYSIS REPORT FILED UNDER CORRESPONDENCE NO. 19-0836.

Lynda M. Kowalski
Lynda M. Kowalski
Nuclear & Environmental Services, Release Manager
2019-04-29 11:17:-05'00'

ESSENTIAL DRAWING

◎ REVISED ○ ISSUED	INCORPORATED DCN, DDC,	CHANGE PKG. NO.
THIS DWG. SUPERSEDES BY	REV.	THIS DWG. SUPERSEDES REV.
REVISION NOTES	REF. CR 0019530: USAR FIG. ADDED TO DRAWING	

WOLF CREEK NUCLEAR OPERATING CORPORATION — ELECTRONIC APPROVAL

CIRCULATING WATER SCREENHOUSE PLANS

SCALE	DRAWING NUMBER	SHEET	REV
1/8" = 1'-0"	M-0004	27	A

34X44 E SIZE

NOTES:

1. FOR EQUIPMENT NUMBER DESIGNATIONS SEE DRAWING M-0004.

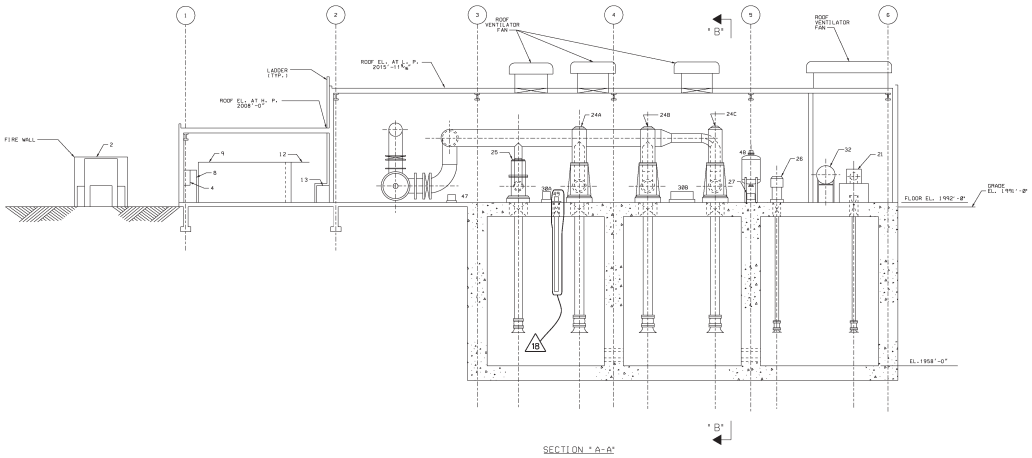

SECTION "A-A"

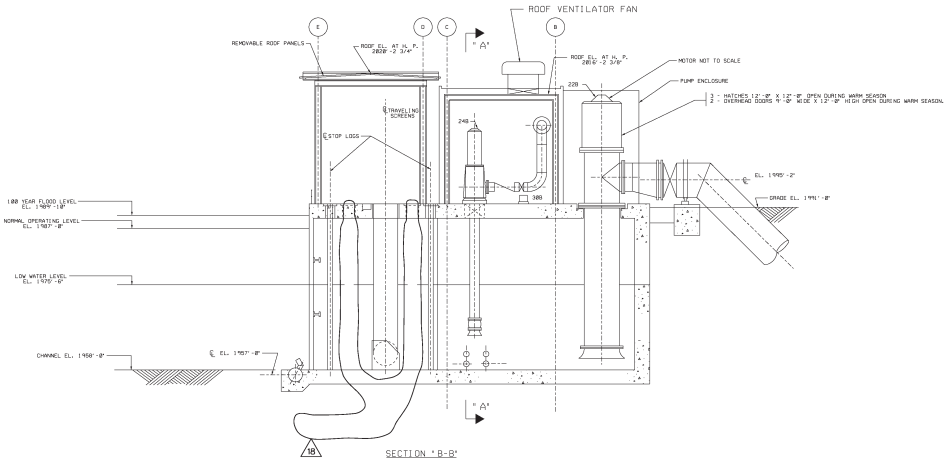

SECTION "B-B"

USAR FIG. 10.4-1-05

ESSENTIAL DRAWING

⊗ REVISED	INCORPORATE CHG.(S):	WP-M-0005-017-8-1	CHANGE 012633
⊗ ISSUED		WP-M-0005-017-8-1	PKG.NO. 012249

THIS DWG.SUPERSEDES BY REV. THIS DWG.SUPERSEDES REV.

REVISION NOTES

WOLF CREEK NUCLEAR OPERATING CORPORATION

ELECTRONIC APPROVAL

CIRCULATING WATER SCREENHOUSE - SECTIONS

SCALE 1/8" = 1'-0" | DRAWING NUMBER M-0005 | SHEET 18 | REV

Gary L. Rhoades
Professional Engineer
Registered in Kansas and Iowa
Certificate no. as on file at owner

34X44 1 SIZE
M-0005-1-18

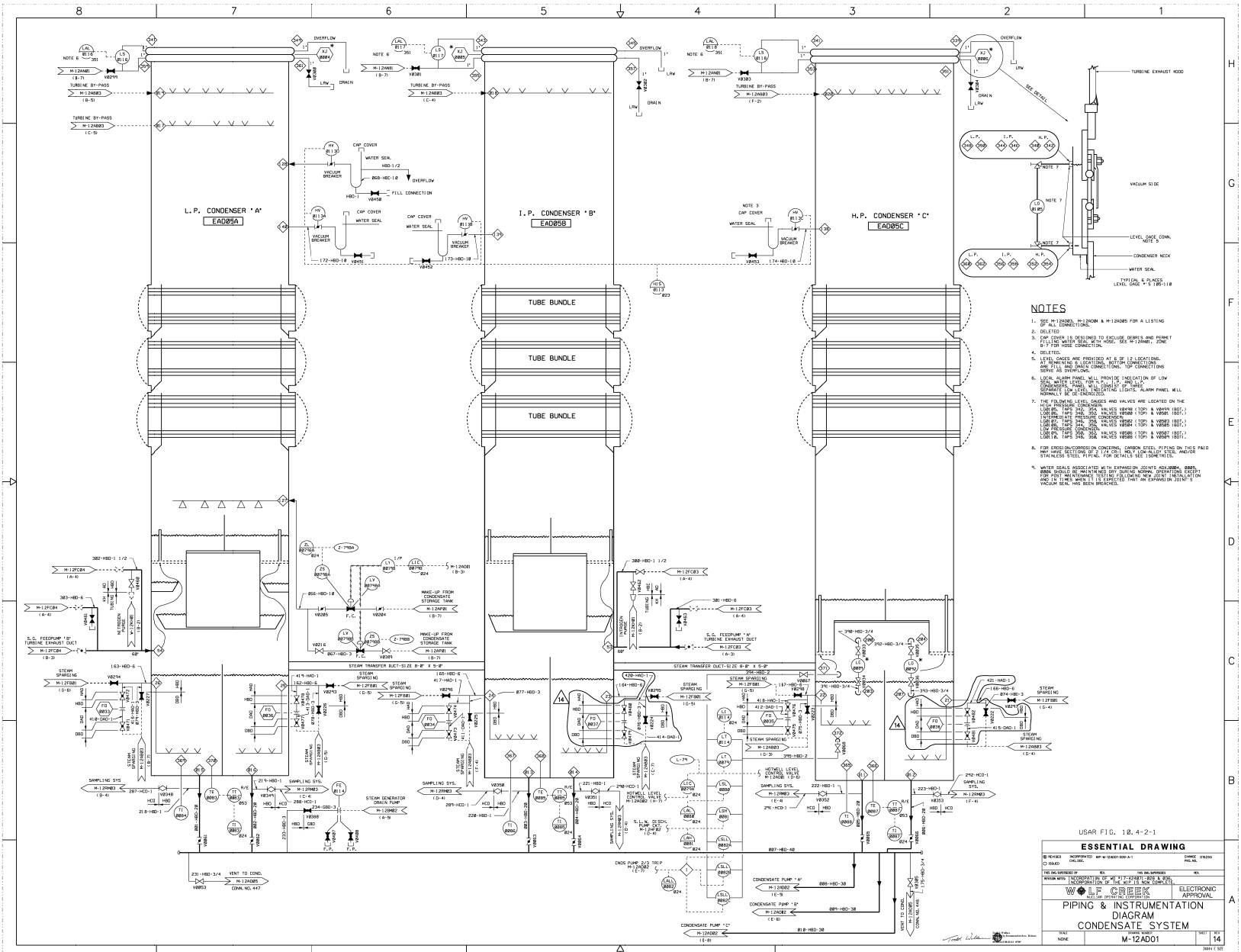
L.P. CONDENSER "A"
EAD05A
I.P. CONDENSER "B"
EAD05B
H.P. CONDENSER "C"
EAD05C
TUBE BUNDLE
TUBE BUNDLE
TUBE BUNDLE
TURBINE EXHAUST HOOD
VACUUM SIDE
LEVEL GAGE CONN. NOTE 5
CONDENSER NECK
WATER SEAL
TYPICAL 6 PLACES
LEVEL GAGE * 5 180-118
SEE DETAIL
OVERFLOW
DRAIN
CAP COVER
WATER SEAL
VACUUM BREAKER
FILL CONNECTION
MAKE-UP FROM CONDENSATE STORAGE TANK
STEAM TRANSFER DUCT-SIZE 8'-8" X 5'-8"
STEAM TRANSFER DUCT-SIZE 8'-8" X 5'-8"
S.G. FEEDPUMP "B" TURBINE EXHAUST DUCT
S.G. FEEDPUMP "A" TURBINE EXHAUST DUCT
STEAM SPARGING
SAMPLING SYS.
STEAM GENERATOR DRAIN PUMP
HOTWELL LEVEL CONTROL VALVE
S.L.W. DISCH. PUMP DISC.
CNDS PUMP 2/3 TRIP
CONDENSATE PUMP "A"
CONDENSATE PUMP "B"
CONDENSATE PUMP "C"
VENT TO COND.
CONN. NO. 447
CONN. NO. 446
NOTES
1. SEE M-12AD003, M-12AD004 & M-12AD005 FOR A LISTING OF LEVEL CONNECTIONS.
2. DELETED.
3. CAP COVER IS DESIGNED TO EXCLUDE DEBRIS AND PERMIT WATER SEAL WITH MODE. SEE M-12AN81, ZONE B-7 FOR HOSE CONNECTION.
4. DELETED.
5. LEVEL GAGES ARE PROVIDED AT 6 OF 12 LOCATIONS. LEFT-HAND NO. 6 LOCATIONS, BOTTOM CONNECTIONS ARE FILL AND DRAIN CONNECTIONS. TOP CONNECTIONS SERVE AS OVERFLOW.
6. LOCAL ALARM PANEL WILL PROVIDE INDICATION OF LOW SEAL WATER LEVEL FOR H.P., I.P. AND L.P. CONDENSERS. PANEL WILL CONSIST OF THREE (3) ALARMS AND THREE (3) ALARMING LIGHTS. ALARM PANEL WILL NORMALLY BE DE-ENERGIZED.
7. THE FOLLOWING LEVEL GAUGES AND VALVES ARE LOCATED ON THE HIGH PRESSURE CONDENSER:
LGN18A, TAPS 342, 354, VALVES V8498 (TOP) & V8499 (BOT.)
LGN18B, TAPS 348, 360, VALVES V8500 (TOP) & V8501 (BOT.)
INTERMEDIATE PRESSURE CONDENSER:
LGN18C, TAPS 342, 354, VALVES V8502 (TOP) & V8503 (BOT.)
LGN18D, TAPS 348, 360, VALVES V8504 (TOP) & V8505 (BOT.)
LOW PRESSURE CONDENSER:
LGN18E, TAPS 348, 360, VALVES V8506 (TOP) & V8507 (BOT.)
LGN18F, TAPS 348, 360, VALVES V8508 (TOP) & V8509 (BOT.)
8. FOR CROSS-ON/CORROSION CONCERNS, CARBON STEEL PIPING ON THIS PAID MAY HAVE SECTIONS OF 2 1/4 CR-1 MOLY LOW-ALLOY STEEL AND/OR STAINLESS STEEL PIPING. FOR DETAILS SEE ISOMETRICS.
9. WATER SEALS ASSOCIATED WITH EXPANSION JOINTS AEJ0004, 0005, 0006 SHOULD BE MAINTAINED DRY DURING NORMAL OPERATIONS EXCEPT WHEN THE SEALS ARE BEING FILLED FOLLOWING NEW JOINT INSTALLATION AND IN TIMES WHEN IT IS EXPECTED THAT AN EXPANSION JOINT'S VACUUM SEAL HAS BEEN BREACHED.
USAR FIG. 10.4-2-1
ESSENTIAL DRAWING
WOLF CREEK
NUCLEAR OPERATING CORPORATION
ELECTRONIC APPROVAL
PIPING & INSTRUMENTATION DIAGRAM
CONDENSATE SYSTEM
SCALE NONE
DRAWING NUMBER M-12AD01
SHEET 14
34X44 1 SET

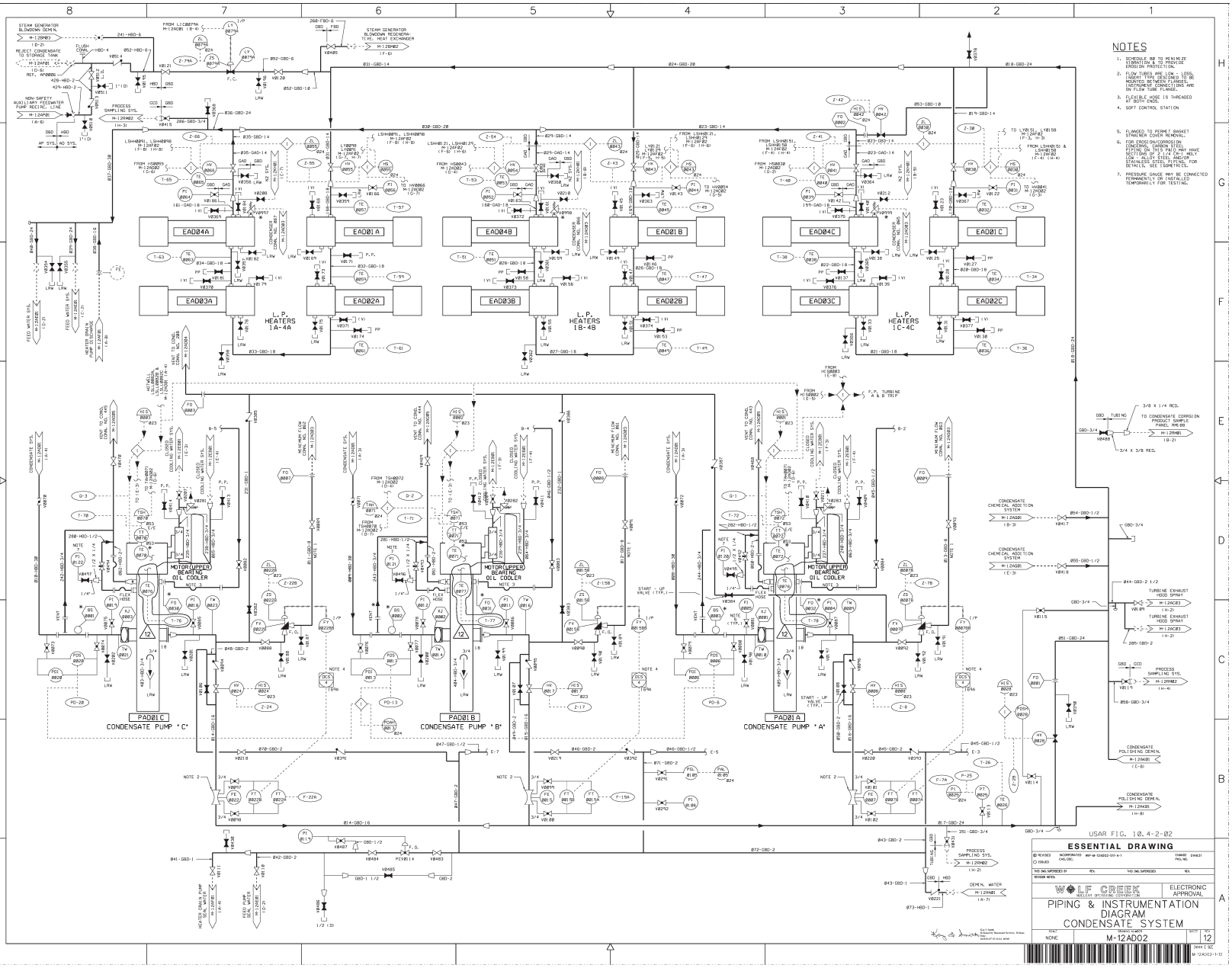
NOTES
1. SCHEDULE 80 TO MINIMIZE VIBRATION & TO PROVIDE EROSION PROTECTION.
2. FLOW TUBES ARE LOW - LOSS, INSERT TYPE DESIGNED TO BE MOUNTED BETWEEN FLANGES. INSTRUMENT CONNECTIONS ARE ON FLOW TUBE FLANGE.
3. FLEXIBLE HOSE IS THREADED AT BOTH ENDS.
4. SOFT CONTROL STATION
5. FLANGED TO PERMIT BASKET STRAINER COVER REMOVAL.
6. FOR EROSION/CORROSION CONCERNS, CARBON STEEL PIPING ON THIS PAGE MAY HAVE TO BE REPLACED WITH 1 1/2% MOLY LOW - ALLOY STEEL AND/OR STAINLESS STEEL PIPING. FOR DETAILS, SEE ISOMETRICS.
7. PRESSURE GAUGE MAY BE CONNECTED PERMANENTLY OR INSTALLED TEMPORARILY FOR TESTING.
EAD04A
EAD01A
EAD04B
EAD01B
EAD04C
EAD01C
EAD03A
EAD02A
EAD03B
EAD02B
EAD03C
EAD02C
L.P. HEATERS 1A-4A
L.P. HEATERS 1B-4B
L.P. HEATERS 1C-4C
MOTOR(UPPER BEARING) OIL COOLER
PAD01C CONDENSATE PUMP "C"
PAD01B CONDENSATE PUMP "B"
PAD01A CONDENSATE PUMP "A"
USAR FIG. 10.4-2-02
ESSENTIAL DRAWING
WOLF CREEK NUCLEAR OPERATING CORPORATION
ELECTRONIC APPROVAL
PIPING & INSTRUMENTATION DIAGRAM
CONDENSATE SYSTEM
SCALE NONE
DRAWING NUMBER M-12AD02
SHEET 12
M-12AD02-1-12

CONDENSER CONNECTION NUMBER	CONDENSER LOCATION C HP	CONDENSER LOCATION B IP	CONDENSER LOCATION A LP	LINE NUMBER	LINE CLASS	LINE SIZE	CONNECTION SIZE	CONDENSER ISOLATION VALVE NUMBER	SERVICE	DRAWING INTERFACE NUMBER	INTERFACE DRAWING ZONE	REMARKS
001			X		HBD	12"	12"		CIRC. WATER INLET (STANDPIPE)			
002			X		HBD	12"	12"		CIRC. WATER INLET (STANDPIPE)			
005	X				HBD	12"	12"		CIRC. WATER OUTLET (STANDPIPE)			
011	X			005	HBD	28"	28"	V0805	CONDENSATE OUTLET	AD01	B-3	
012	X			006	HBD	28"	28"	V0806	CONDENSATE OUTLET	AD01	B-3	
013		X		003	HBD	28"	28"	V0803	CONDENSATE OUTLET	AD01	B-5	
014		X		004	HBD	28"	28"	V0804	CONDENSATE OUTLET	AD01	B-5	
015			X	001	HBD	28"	28"	V0801	CONDENSATE OUTLET	AD01	B-7	
016			X	002	HBD	28"	28"	V0802	CONDENSATE OUTLET	AD01	B-7	
017			X		GBD	24"	24"		TURBINE BYPASS (4 VALVES)	AD01	H-8	SCH. 120 NOTE 3
018		X			GBD	24"	24"		TURBINE BYPASS (4 VALVES)	AD01	H-5	SCH. 120 NOTE 3
019			X		GBD	28"	28"		TURBINE BYPASS (3 VALVES)	AD01	H-8	SCH. 120 NOTE 3
028	X				GBD	12"	12"		TURBINE BYPASS (1 VALVE)	AD01	H-3	SCH. 120 NOTE 3
021	X			166	HBD	6"	6"	V0222 V0223	LOW LOAD CONDENSATE HEATING STEAM SPARGER	AD01	C-2	
022	X			167	HBD	6"	6"	V0223 V0224	LOW LOAD CONDENSATE HEATING STEAM SPARGER	AD01	C-3	
023		X		164	HBD	6"	6"	V0224 V0225	LOW LOAD CONDENSATE HEATING STEAM SPARGER	AD01	C-4	
024		X		165	HBD	6"	6"	V0225 V0226	LOW LOAD CONDENSATE HEATING STEAM SPARGER	AD01	C-5	
025			X	162	HBD	6"	6"	V0226 V0253	LOW LOAD CONDENSATE HEATING STEAM SPARGER	AD01	C-7	
026			X	163	HBD	6"	6"	V0227 V0254	LOW LOAD CONDENSATE HEATING STEAM SPARGER	AD01	C-8	
027	X			002	HBD	8"	12"	V0230	HTR 1C SHELL DRAIN	AF02	F-4	12" X 8" REDUCER AT CONDENSER
028		X		001	HBD	8"	12"	V0229	HTR 1B SHELL DRAIN	AF02	F-6	
029			X	008	HBD	8"	12"	V0228	HTR 1A SHELL DRAIN	AF02	F-8	
030	X			005	HBD	6"	6"	V0233	HTR 4C SHELL DRAIN DUMP	AF02	B-4	
031		X		004	HBD	6"	6"	V0232	HTR 4B SHELL DRAIN DUMP	AF02	B-6	
032			X	003	HBD	6"	6"	V0231	HTR 4A SHELL DRAIN DUMP	AF02	B-8	
033	X			006	HBD	8"	12"	V0236	HTR 1C SHELL DRAIN DUMP	AF02	G-4	12" X 8" REDUCER AT CONDENSER
034		X		007	HBD	8"	12"	V0235	HTR 1B SHELL DRAIN DUMP	AF02	G-6	
035			X	006	HBD	8"	12"	V0234	HTR 1A SHELL DRAIN DUMP	AF02	G-8	
036	X			AF-144	HBD	12"	12"		HTR 1C SHELL DRAIN DUMP	AF02	G-3	LINES PASS THRU COND. SHELLS
037		X		AF-142	HBD	12"	12"		HTR 1B SHELL DRAIN DUMP	AF02	G-5	
038			X	AF-148	HBD	12"	12"		HTR 1A SHELL DRAIN DUMP	AF02	G-7	
039	X			010	HBD	8"	18"	V0239	HTR 2C SHELL DRAIN DUMP	AF02	E-4	18" X 8" REDUCER AT CONDENSER
040		X		008	HBD	8"	18"	V0238	HTR 2B SHELL DRAIN DUMP	AF02	E-6	
041			X	009	HBD	8"	18"	V0237	HTR 2A SHELL DRAIN DUMP	AF02	E-8	
042	X			014	HBD	6"	8"	V0242	HTR 3C SHELL DRAIN DUMP	AF02	C-4	8" X 6" REDUCER AT CONDENSER
043		X		013	HBD	6"	8"	V0241	HTR 3B SHELL DRAIN DUMP	AF02	C-6	
044			X	012	HBD	6"	8"	V0240	HTR 3A SHELL DRAIN DUMP	AF02	C-8	
045	X			123	HBD	28"	28"	NONE	MISC. DRAIN HEADER	AD06	B-3	SCH. 80 NOTE 3
046			X	124	HBD	28"	28"	NONE	MISC. DRAIN HEADER	AD06	B-8	SCH. 80 NOTE 3
047	X				HBD	14"	16"		EIGHTH STG. TURBINE EXTRACTION	AF02	C-4	LINES PASS THRU COND. SHELLS
048		X			HBD	14"	16"		EIGHTH STG. TURBINE EXTRACTION	AF02	C-6	
049			X		HBD	14"	16"		EIGHTH STG. TURBINE EXTRACTION	AF02	C-8	
050	X				HBD	24"	24"		NINTH STG. TURBINE EXTRACTION	AF02	E-4	
051		X			HBD	24"	24"		NINTH STG. TURBINE EXTRACTION	AF02	E-6	
052			X		HBD	24"	24"		NINTH STG. TURBINE EXTRACTION	AF02	E-8	
053		X			HBD	68"	68"	FCV0849	S.G.F.P. EXHAUST, FROM KF08A	FC03	B-3	
054			X		HBD	68"	68"	FCV0850	S.G.F.P. EXHAUST, FROM KF08B	FC04	B-3	
055	X			AC-845	HBD	24"	24"		M.S.R. R.V. DISCHARGE	AC02	D-2	
056	X			AC-838	HBD	24"	24"		M.S.R. R.V. DISCHARGE	AC04	H-3	
057		X		AC-839	HBD	24"	24"		M.S.R. R.V. DISCHARGE	AC02	D-2	
058		X		AC-847	HBD	24"	24"		M.S.R. R.V. DISCHARGE	AC04	H-2	
059			X	AC-837	HBD	24"	24"		M.S.R. R.V. DISCHARGE	AC02	H-2	
060			X	AC-846	HBD	24"	24"		M.S.R. R.V. DISCHARGE	AC04	D-3	
061	X			012	GBD	8"	18"	V0816	CONDENSATE PUMP "B" MIN. FLOW	AD02	E-4	18" X 8" RED. W/ 3" I.D. PUP PIECE AT COND. NOZZLE SCH. 80 NOTE 3
062		X		011	GBD	8"	18"	V0815	CONDENSATE PUMP "C" MIN. FLOW	AD02	E-6	
063			X	013	GBD	8"	18"	V0813	CONDENSATE PUMP "A" MIN. FLOW	AD02	E-2	
064	X						2"					PLUGGED
065	X			131	HBD	1"	1"		L.P. HTR. NO.4C CHANNEL R.V.	AD02	G-3	
066		X		130	HBD	1"	1"		L.P. HTR. NO.4B CHANNEL R.V.	AD02	G-5	
067			X	129	HBD	1"	1"		L.P. HTR. NO.4A CHANNEL R.V.	AD02	G-7	
068			X	118	GBD	6"	28"	AEFV0836	FEEDWATER RECIRC.	AE01	C-6	SCH. 80 NOTE 3
069	X			116	HBD	18"	18"	V0258	S.G.F.P. "A" MIN. FLOW	AE01	D-6	SCH. 120 NOTE 3
070		X		117	HBD	18"	18"	V0259	S.G.F.P. "B" MIN. FLOW	AE01	B-6	SCH. 120 NOTE 3
071		X		422	HAD	1"	1"		S.G.F.P. "A" SEAL DRAIN	AE01	C-5	1 1/2" X 1" RED. INSERT W/ 18" I.D. PUP PIECE AT CONDENSER NOZZLE
072			X	423	HAD	1"	1"		S.G.F.P. "B" SEAL DRAIN	AE01	B-5	
073		X		AE-105	ABD	1"	1"	AEV0275	S.G.F.P. "A" WARM-UP RECIRC.	AE01	E-4	
074			X	AE-104	ABD	1"	1"	AEV0274	S.G.F.P. "B" WARM-UP RECIRC.	AE01	C-4	
075			X	132	HBD	18"	18"	V0267	M.S. DRAIN TANK "B" DUMP	AF01	G-5	18" X 18" REDUCER AT COND. NOZZLE
076			X	276	HBD	18"	18"	V0265	M.S. DRAIN TANK "A" DUMP	AF01	G-5	18" X 18" REDUCER AT COND. NOZZLE
077			X	135	GBD	6"	8"	V0270	1ST. STG. RHT. DRAIN TANK "B" DUMP	AF01	G-3	8" X 6" REDUCER AT COND. NOZZLE
078			X	134	GBD	6"	8"	V0269	1ST. STG. RHT. DRAIN TANK "A" DUMP	AF01	G-7	8" X 6" REDUCER AT COND. NOZZLE
079			X	136	EAD	6"	18"	V0271	2ND. STG. RHT. DRAIN TANK "B" DUMP	AF01	G-2	18" X 6" REDUCER AT COND. NOZZLE
080			X	272	EAD	6"	18"	V0272	2ND. STG. RHT. DRAIN TANK "A" DUMP	AF01	G-8	18" X 6" REDUCER AT COND. NOZZLE

CONDENSER CONNECTION NUMBER	CONDENSER LOCATION C HP	CONDENSER LOCATION B IP	CONDENSER LOCATION A LP	LINE NUMBER	LINE CLASS	LINE SIZE	CONNECTION SIZE	CONDENSER ISOLATION VALVE NUMBER	SERVICE	DRAWING INTERFACE NUMBER	INTERFACE DRAWING ZONE	REMARKS
081			X	145	GBD	12"	12"	V0274	H.P. HTR. NO. 7B DRAIN	AF01	E-3	
082			X	144	GBD	12"	12"	V0273	H.P. HTR. NO. 7A DRAIN	AF01	E-8	
083			X	147	GBD	12"	16"	V0276	H.P. HTR. NO. 6B DRAIN	AF01	D-3	16" X 12" REDUCER AT CONDENSER
084			X	☆	GBD	12"	16"	V0275	H.P. HTR. NO. 6A DRAIN	AF01	D-7	16" X 12" REDUCER AT CONDENSER
085		X		148	HAD	16"	16"	V0277	HTR. DRAIN TANK DRAIN	AF01	B-2	
086			X	149	HAD	16"	16"	V0278	HTR. DRAIN TANK DRAIN	AF01	B-2	
087			X	375	HCD	8"	16"		MISC. DRAIN HEADER	AD06	A-4	16" X 8" ECC. REDUCER AT COND. NOZZLE
091	X			——	——	——	2 1/2"		(ABANDONED) SEE NOTE 5	AC03	D-4	
092		X		——	——	——	2 1/2"		(ABANDONED) SEE NOTE 5	AC03	D-6	
093			X	——	——	——	2 1/2"		(ABANDONED) SEE NOTE 5	AC03	D-6	
094	X			183	HAD	3"	3"	V0245	HEATER NO. 1C VENT	AF03	H-5	
095		X		182	HAD	3"	3"	V0244	HEATER NO. 1B VENT	AF03	H-4	
096			X	181	HAD	3"	3"	V0243	HEATER NO. 1A VENT	AF03	H-2	
097	X			186	HAD	3"	3"	V0248	HEATER NO. 2C VENT	AF03	F-5	
098		X		185	HAD	3"	3"	V0247	HEATER NO. 2B VENT	AF03	F-4	
099			X	184	HAD	3"	3"	V0246	HEATER NO. 2A VENT	AF03	F-2	
100	X			189	HAD	3"	3"	V0251	HEATER NO. 3C VENT	AF03	E-5	
101		X		188	HAD	3"	3"	V0250	HEATER NO. 3B VENT	AF03	E-4	
102			X	187	HAD	3"	3"	V0249	HEATER NO. 3A VENT	AF03	E-2	
103	X			112	HAD	3"	3"	V0254	HEATER NO. 4C VENT	AF03	C-5	
104		X		111	HAD	3"	3"	V0253	HEATER NO. 4B VENT	AF03	C-4	
105			X	110	HAD	3"	3"	V0252	HEATER NO. 4A VENT	AF03	C-2	
106			X	113	HAD	2 1/2"	2 1/2"	V0255	H.P. HTR. NO. 5A & 5B VENT	AF03	C-5	VALVE IS CLASS GBD
107			X	114	HCD	2 1/2"	2 1/2"	V0256	H.P. HTR. NO. 6A & 6B VENT	AF03	E-5	VALVE IS CLASS GCD
108			X	115	HCD	2 1/2"	2 1/2"	V0257	H.P. HTR. NO. 7A & 7B VENT	AF03	H-5	
109			X	386	HBD	8"	8"		H.P. HTR. NO. 5B RV	AF03	B-6	LINES PASS THRU CONDENSER SHELLS
110			X	385	HBD	8"	8"		H.P. HTR. NO. 5A RV	AF03	B-8	
111			X	387	HBD	6"	6"		H.P. HTR. NO. 6A RV	AF03	E-8	
112			X	388	HBD	6"	6"		H.P. HTR. NO. 6B RV	AF03	E-6	
113			X	389	HBD	6"	6"		H.P. HTR. NO. 7A RV	AF03	G-8	
114			X	310	HBD	6"	6"		H.P. HTR. NO. 7B RV	AF03	G-6	
115	X			AF-283	HBD	1 1/2"	1 1/2"		L.P. HTR. NO. 1C DRAIN	AF03	C-5	
116		X		AF-281	HBD	1 1/2"	1 1/2"		L.P. HTR. NO. 1B DRAIN	AF03	C-4	
117			X	AF-279	HBD	1 1/2"	1 1/2"		L.P. HTR. NO. 1A DRAIN	AF03	C-2	
118	X			AF-302	HBD	1 1/2"	1 1/2"		L.P. HTR. NO. 2C DRAIN	AF03	F-5	
119		X		AF-300	HBD	1 1/2"	1 1/2"		L.P. HTR. NO. 2B DRAIN	AF03	F-4	
120			X	AF-298	HBD	1 1/2"	1 1/2"		L.P. HTR. NO. 2A DRAIN	AF03	F-2	
121	X			AF-320	HBD	1 1/2"	1 1/2"		L.P. HTR. NO. 3C DRAIN	AF03	D-5	
122		X		AF-318	HBD	1 1/2"	1 1/2"		L.P. HTR. NO. 3B DRAIN	AF03	D-4	
123			X	AF-316	HBD	1 1/2"	1 1/2"		L.P. HTR. NO. 3A DRAIN	AF03	D-2	
124	X			AF-338	HBD	1 1/2"	1 1/2"		L.P. HTR. NO. 4C DRAIN	AF03	B-5	
125		X		AF-336	HBD	1 1/2"	1 1/2"		L.P. HTR. NO. 4B DRAIN	AF03	B-4	
127			X	866	HBD	10"	10"	V0216 V0285	CONDENSATE MAKE-UP TO HOTWELL	AD01	D-7	
128			X	868	HBD	10"	10"	HV0130	VACUUM BREAKER	AD01	C-7	MOTOR OPERATED VALVE
129			X	128	HBD	12"	12"	CAV0886	STEAM PACKING UNLOADING VALVE	CA01	C-6	
130			X	127	HBD	3"	3"	V0305	STM. PACKING EXHAUSTER DRAIN	CA01	A-4	
131			X	151	HAD	4"	4"	V0200	MISC. DRAIN HEADER	AD06	A-8	
132			X	152	HBD	4"	4"	V0486	MISC. COND. DRAIN TANK (TUBE BUNDLE)	LE04	D-7	
133			X	826	GAD	4"	4"	V0266	REBOILER DRAIN TANK	FB01	C-8	
134	X			AF-281	HBD	6"	6"		L.P. HTR. NO. 4C SHELL DRAIN DUMP	AF02	B-3	LINES PASS THRU SHELL
135		X		AF-199	HBD	6"	6"		L.P. HTR. NO. 4B SHELL DRAIN DUMP	AF02	B-5	
136			X	AF-197	HBD	6"	6"		L.P. HTR. NO. 4A SHELL DRAIN DUMP	AF02	B-7	
137	X			869	HBD	4"	4"		DEMINERALIZER FLUSH LINE	AK01	D-2	
138	X			174	HBD	10"	10"	HV0133C	VACUUM BREAKER	AD01	G-3	MOTOR OPERATED VALVES
139		X		173	HBD	10"	10"	HV0133B	VACUUM BREAKER	AD01	G-6	
140			X	172	HBD	10"	10"	HV0133A	VACUUM BREAKER	AD01	G-7	
141	X						14"					CAPPED
142			X		HBD	8"	4"		STEAM GEN. BLOW DOWN SYSTEM	BM01	H-2	8" X 4" ECC. REDUCER AT COND. NOZZLE
143			X	CG-837	HBD	8"	8"		AIR VAPOR TAKE OFF FOR L.P. UPPER SOUTH TUBE BUNDLE.	CG01	G-7	TYPE 1C CONDENSER ONLY
144			X	CG-836	HBD	8"	8"		AIR VAPOR TAKE OFF FOR L.P. MIDDLE SOUTH TUBE BUNDLE.	CG01	G-7	
145			X	CG-802	HBD	8"	8"		AIR VAPOR TAKE OFF FOR L.P. LOWER SOUTH TUBE BUNDLE.	CG01	H-7	
146			X	CG-838	HBD	8"	8"		AIR VAPOR TAKE OFF FOR L.P. UPPER NORTH TUBE BUNDLE.	CG01	H-7	
147			X	CG-801	HBD	8"	8"		AIR VAPOR TAKE OFF FOR L.P. MIDDLE NORTH TUBE BUNDLE.	CG01	G-7	
148			X	CG-839	HBD	8"	8"		AIR VAPOR TAKE OFF FOR L.P. LOWER NORTH TUBE BUNDLE.	CG01	H-7	
158	X			158	HBD	6"	6"		L.P. HTR. NO. 3C R.V.	AF03	D-5	
159	X			155	HBD	6"	6"		L.P. HTR. NO. 4C R.V.	AF03	C-5	
160		X		157	HBD	6"	6"		L.P. HTR. NO. 3B R.V.	AF03	D-4	

21 ☆ ISOLATION VALVE V0275 IS WELDED DIRECTLY TO THE 16" X 12" REDUCER. THE REDUCER IS WELDED DIRECTLY TO THE CONDENSER CONNECTION.

NOTES

1. THIS IS A LISTING OF ALL CONDENSER CONNECTIONS. THE NUMBERS ON THIS LIST CORRESPOND TO THOSE NUMBERS SHOWN ON THE INTERFACE SYSTEM DRAWING (EXAMPLE BELOW).

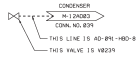

2. SEE PRINT NO.'S M-804-00004 THRU M-804-00013, AND M-804-00035 AND M-804-00075, FOR INGERSOLL-RAND PHYSICAL LOCATIONS OF CONNECTIONS AND TABULATION OF CONNECTIONS.
3. LINE CLASS OF HEADER SCHEDULE THAN HBD TO BE CHECKED BY STRESS ANALYSIS FOR VIBRATION AND EROSION CONSIDERATIONS.
4. FOR EROSION/CORROSION CONCERNS, CARBON STEEL PIPING ON THIS PAGE MAY HAVE SECTIONS OF 1 1/4 CR.; MOLY LOW-ALLOY STEEL AND/OR STAINLESS STEEL PIPING. FOR DETAILS, SEE ISOMETRICS.
5. CONNECTION ABANDONED, CONNECTING PIPING REMOVED, OVERSIZE PIPE CAP WELDED INTERNAL. SEE DRAWING M-834C24 FOR INTERNAL CAP DETAIL.

USAR FIG. 10.4-2-3

ESSENTIAL DRAWING

REVISED	INCORPORATED DWL-SOC	WP-M-12AD03-020-A-1	CHANGE 04706 PKG.NO.
ISSUED			
THIS DWG.SUPERSEDES OF	REV.	THIS DWG.SUPERSEDES	REV.

REVISION NOTES
REVISED LINE CLASS PER CCP 14786, SWO 13-362834-001& 13-362834-002.

WOLF CREEK NUCLEAR OPERATING CORPORATION — ELECTRONIC APPROVAL

PIPING & INSTRUMENTATION DIAGRAM CONDENSATE SYSTEM

SCALE	DRAWING NUMBER	SHEET	REV
NONE	M-12AD03	1	21

SHEET 1 OF

M-12AD03-1-21

CONDENSER CONNECTION NUMBER	CONDENSER LOCATION HP	CONDENSER LOCATION IP	CONDENSER LOCATION LP	LINE NUMBER	LINE CLASS	LINE SIZE	CONNECTION SIZE	CONDENSER ISOLATION NUMBER	SERVICE	DRAWING INTERFACE NUMBER	INTERFACE DRAWING ZONE	REMARKS
161		x		154	HBD	6"	6"		L.P. HTR. NO. 4 B R.V.	AFB3	C-4	
162			x	156	HBD	6"	6"		L.P. HTR. NO. 3 A R.V.	AFB3	D-2	/04
163			x	153	HBD	6"	6"		L.P. HTR. NO. 4 A R.V.	AFB3	C-2	
164	x					66"	66"		UPPER CIRC. WTR. CONN.	12DA81	E-4	
165	x					66"	66"		UPPER CIRC. WTR. CONN.	12DA81	E-3	
166		x				66"	66"		UPPER CIRC. WTR. CONN.	12DA81	F-5	
167		x				66"	66"		UPPER CIRC. WTR. CONN.	12DA81	E-5	
168			x			66"	66"		UPPER CIRC. WTR. CONN.	12DA81	F-7	
169			x			66"	66"		UPPER CIRC. WTR. CONN.	12DA81	F-7	
170			x			66"	66"		UPPER CIRC. WTR. CONN.	12DA81	E-7	
171	x					66"	66"		UPPER CIRC. WTR. CONN.	12DA81	F-3	
172	x					66"	66"		UPPER CIRC. WTR. CONN.	12DA81	F-4	
173		x				66"	66"		UPPER CIRC. WTR. CONN.	12DA81	F-5	
174		x				66"	66"		UPPER CIRC. WTR. CONN.	12DA81	E-5	
175			x			66"	66"		UPPER CIRC. WTR. CONN.	12DA81	E-7	
176	x					72"	72"		MIDDLE CIRC. WTR. CONN.	12DA81	F-3	
177	x					72"	72"		MIDDLE CIRC. WTR. CONN.	12DA81	F-4	
178		x				72"	72"		MIDDLE CIRC. WTR. CONN.	12DA81	F-5	
179		x				72"	72"		MIDDLE CIRC. WTR. CONN.	12DA81	E-6	
180			x			72"	72"		MIDDLE CIRC. WTR. CONN.	12DA81	F-7	
181			x			72"	72"		MIDDLE CIRC. WTR. CONN.	12DA81	F-7	
182			x			72"	72"		MIDDLE CIRC. WTR. CONN.	12DA81	E-7	
183	x					72"	72"		MIDDLE CIRC. WTR. CONN.	12DA81	E-4	
184	x					72"	72"		MIDDLE CIRC. WTR. CONN.	12DA81	E-3	
185		x				72"	72"		MIDDLE CIRC. WTR. CONN.	12DA81	F-6	
186		x				72"	72"		MIDDLE CIRC. WTR. CONN.	12DA81	E-5	
187			x			72"	72"		MIDDLE CIRC. WTR. CONN.	12DA81	E-7	
188	x					72"	72"		LOWER CIRC. WTR. CONN.	12DA81	E-4	
189	x					72"	72"		LOWER CIRC. WTR. CONN.	12DA81	E-2	
190		x				72"	72"		LOWER CIRC. WTR. CONN.	12DA81	F-6	
191		x				72"	72"		LOWER CIRC. WTR. CONN.	12DA81	E-5	
192			x			72"	72"		LOWER CIRC. WTR. CONN.	12DA81	F-7	
193			x			72"	72"		LOWER CIRC. WTR. CONN.	12DA81	F-8	
194			x			72"	72"		LOWER CIRC. WTR. CONN.	12DA81	E-8	
195	x					72"	72"		LOWER CIRC. WTR. CONN.	12DA81	F-2	
196	x					72"	72"		LOWER CIRC. WTR. CONN.	12DA81	F-4	
197		x				72"	72"		LOWER CIRC. WTR. CONN.	12DA81	F-5	
198		x				72"	72"		LOWER CIRC. WTR. CONN.	12DA81	E-6	
199			x			72"	72"		LOWER CIRC. WTR. CONN.	12DA81	E-6	
200	x					1"	V0833		HOTWELL GAUGE GLASS	AD8N	C-3	
201	x					1"						PLUGGED
202	x					1"						
203	x					1"	V0834		HOTWELL GAUGE GLASS	AD8N	C-3	
204	x					1"	V0835		HOTWELL GAUGE GLASS	AD8N	C-3	
205	x					1"						PLUGGED
206	x					1"						
207	x					1"	V0836		HOTWELL GAUGE GLASS	AD8N	C-3	/04
208		x		171	HBD	1"	1"	V0362 V0363 V0364	CONDENSATE PUMP DISCHARGE VENT	AD82	F-7	
209		x				1"						PLUGGED
210		x				1"						
211		x		294	HBD	1"	1"	RMV0828	SAMPLE PUMP DISCHARGE	RM83	B-4	
212		x		293	HBD	1"	1"	RMV0827 RMV0833	SAMPLE PUMP VENT	RM83	A-8	
213		x					1"					PLUGGED
214		x					1"					
215		x					1"					
216			x				1"					
217			x				1"					
218			x				1"					
219			x	AF-345	HBD	1"	1"	AFV8594	HTR. DRAIN PUMP SEAL WATER RETURN	AF8N	A-6	
220			x				1"					PLUGGED
221			x				1"					
222			x				1"					
223			x				1"					
224	x				HBD	3"	3"		WTR. BOX VENTS	12DA82	B-4	/04
225	x				HBD	3"	3"		WTR. BOX VENTS	12DA82	B-3	
226	x				HBD	3"	3"		WTR. BOX VENTS	12DA82	B-4	
227	x				HBD	3"	3"		WTR. BOX VENTS	12DA82	B-3	
228	x				HBD	3"	3"		WTR. BOX VENTS	12DA82	B-4	
229	x				HBD	3"	3"		WTR. BOX VENTS	12DA82	B-3	
230	x				HBD	3"	3"		WTR. BOX VENTS	12DA82	D-3	/04
231	x				HBD	3"	3"		WTR. BOX VENTS	12DA82	D-4	
232	x				HBD	3"	3"		WTR. BOX VENTS	12DA82	D-3	
233	x				HBD	3"	3"		WTR. BOX VENTS	12DA82	D-4	
234	x				HBD	3"	3"		WTR. BOX VENTS	12DA82	D-3	
235	x				HBD	3"	3"		WTR. BOX VENTS	12DA82	D-4	
236	x				HBD	3"	3"		WTR. BOX VENTS	12DA82	A-3	
237	x				HBD	3"	3"		WTR. BOX VENTS	12DA82	A-3	
238		x			HBD	3"	3"		WTR. BOX VENTS	12DA82	D-5	
239		x			HBD	3"	3"		WTR. BOX VENTS	12DA82	D-6	/04
240		x			HBD	3"	3"		WTR. BOX VENTS	12DA82	D-5	

CONDENSER CONNECTION NUMBER	CONDENSER LOCATION HP	CONDENSER LOCATION IP	CONDENSER LOCATION LP	LINE NUMBER	LINE CLASS	LINE SIZE	CONNECTION SIZE	CONDENSER ISOLATION NUMBER	SERVICE	DRAWING INTERFACE NUMBER	INTERFACE DRAWING ZONE	REMARKS
241		x			HBD	3"	3"		WTR. BOX VENTS	12DA82	D-6	
242		x			HBD	3"	3"		WTR. BOX VENTS	12DA82	D-5	
243		x			HBD	3"	3"		WTR. BOX VENTS	12DA82	D-6	
244		x			HBD	3"	3"		WTR. BOX VENTS	12DA82	B-6	
245		x			HBD	3"	3"		WTR. BOX VENTS	12DA82	B-5	
246		x			HBD	3"	3"		WTR. BOX VENTS	12DA82	B-6	
247		x			HBD	3"	3"		WTR. BOX VENTS	12DA82	B-5	
248		x			HBD	3"	3"		WTR. BOX VENTS	12DA82	B-6	
249		x			HBD	3"	3"		WTR. BOX VENTS	12DA82	B-5	
									WTR. BOX VENTS			
									WTR. BOX VENTS			
252			x		HBD	3"	3"		WTR. BOX VENTS	12DA82	D-7	
253			x		HBD	3"	3"		WTR. BOX VENTS	12DA82	D-8	
254			x		HBD	3"	3"		WTR. BOX VENTS	12DA82	D-7	
255			x		HBD	3"	3"		WTR. BOX VENTS	12DA82	D-8	
256			x		HBD	3"	3"		WTR. BOX VENTS	12DA82	D-7	
257			x		HBD	3"	3"		WTR. BOX VENTS	12DA82	D-8	
258			x		HBD	3"	3"		WTR. BOX VENTS	12DA82	B-8	
259			x		HBD	3"	3"		WTR. BOX VENTS	12DA82	B-7	
260			x		HBD	3"	3"		WTR. BOX VENTS	12DA82	B-8	
261			x		HBD	3"	3"		WTR. BOX VENTS	12DA82	B-7	
262			x		HBD	3"	3"		WTR. BOX VENTS	12DA82	B-8	
263			x		HBD	3"	3"		WTR. BOX VENTS	12DA82	B-7	
264			x		HBD	3"	3"		WTR. BOX VENTS	12DA82	E-7	/04
265			x		HBD	3"	3"		WTR. BOX VENTS	12DA82	E-7	
266	x				HBD	4"	4"		WTR. BOX DRAINS	12DA82	E-4	
267	x				HBD		4"		WTR. BOX DRAINS	12DA82	E-3	
268	x				HBD		4"		WTR. BOX DRAINS	12DA82	E-4	
269	x				HBD		4"		WTR. BOX DRAINS	12DA82	E-3	
270	x				HBD		4"		WTR. BOX DRAINS	12DA82	E-4	
271	x				HBD		4"		WTR. BOX DRAINS	12DA82	E-2	
272	x				HBD		4"		WTR. BOX DRAINS	12DA82	F-3	
273	x				HBD		4"		WTR. BOX DRAINS	12DA82	F-4	/04
274	x				HBD		4"		WTR. BOX DRAINS	12DA82	F-3	
275	x				HBD		4"		WTR. BOX DRAINS	12DA82	F-4	
276	x				HBD		4"		WTR. BOX DRAINS	12DA82	F-2	
277	x				HBD		4"		WTR. BOX DRAINS	12DA82	F-4	
278		x			HBD		4"		WTR. BOX DRAINS	12DA82	F-5	
279		x			HBD		4"		WTR. BOX DRAINS	12DA82	F-5	
280		x			HBD		4"		WTR. BOX DRAINS	12DA82	F-5	
281		x			HBD		4"		WTR. BOX DRAINS	12DA82	F-6	
282		x			HBD		4"		WTR. BOX DRAINS	12DA82	F-5	
283		x			HBD		4"		WTR. BOX DRAINS	12DA82	F-6	
284		x			HBD		4"		WTR. BOX DRAINS	12DA82	E-5	
285		x			HBD		4"		WTR. BOX DRAINS	12DA82	E-5	
286		x			HBD		4"		WTR. BOX DRAINS	12DA82	E-6	/04
287		x			HBD		4"		WTR. BOX DRAINS	12DA82	E-5	
288		x			HBD		4"		WTR. BOX DRAINS	12DA82	E-6	
289		x			HBD		4"		WTR. BOX DRAINS	12DA82	E-5	
290			x		HBD		4"		WTR. BOX DRAINS	12DA82	F-7	
291			x		HBD		4"		WTR. BOX DRAINS	12DA82	F-7	
292			x		HBD		4"		WTR. BOX DRAINS	12DA82	F-7	PLUGGED
293			x		HBD		4"		WTR. BOX DRAINS	12DA82	F-7	
294			x		HBD		4"		WTR. BOX DRAINS	12DA82	F-6	/04
295			x		HBD		4"		WTR. BOX DRAINS	12DA82	F-8	
296			x		HBD		4"		WTR. BOX DRAINS	12DA82	E-7	
297			x		HBD		4"		WTR. BOX DRAINS	12DA82	E-7	
298			x		HBD		4"		WTR. BOX DRAINS	12DA82	E-7	/04
299			x		HBD		4"		WTR. BOX DRAINS	12DA82	E-7	
300			x		HBD		4"		WTR. BOX DRAINS	12DA82	E-6	
301			x		HBD		4"		WTR. BOX DRAINS	12DA82	E-6	/04
302			x		HBD		6"		STEAM GEN. BLOWDOWN SYSTEM	BM83	C-2	
303	x				HBD		3"		CONDUCTIVITY TAP			
304	x				HBD		3"		CONDUCTIVITY TAP			
305	x				HBD		3"		CONDUCTIVITY TAP			
306	x				HBD		3"		CONDUCTIVITY TAP			
307	x				HBD		3"		CONDUCTIVITY TAP			
308	x				HBD		3"		CONDUCTIVITY TAP			
309	x				HBD		3"		CONDUCTIVITY TAP			
310	x				HBD		3"		CONDUCTIVITY TAP			
311	x				HBD		3"		CONDUCTIVITY TAP			
312	x				HBD		3"		CONDUCTIVITY TAP			
313	x				HBD		3"		CONDUCTIVITY TAP			
314	x				HBD		3"		CONDUCTIVITY TAP			
315		x			HBD		3"		CONDUCTIVITY TAP			
316		x			HBD		3"		CONDUCTIVITY TAP			
317		x			HBD		3"		CONDUCTIVITY TAP			
318		x			HBD		3"		CONDUCTIVITY TAP			
319		x			HBD		3"		CONDUCTIVITY TAP			
320		x			HBD		3"		CONDUCTIVITY TAP			

NOTES

1. FOR NOTES SEE DWG. M-12AD83
2. FOR EROSION/CORROSION CONCERNS, CARBON STEEL PIPING ON THIS P&ID IS WHERE INCONEL, CARBON STEEL, CR-1 MOLY, LOW-ALLOY STEEL AND/OR STAINLESS STEEL PIPING. FOR DETAILS, SEE ISOMETRICS.

USAR FIG. 10-4-2-4

ESSENTIAL DRAWING

REVISED	INCORPORATED	CHANGE
DRAWN	CHKD.	W.O. NO.

THIS DWG. APPROVED BY	REV.	THIS DWG. APPROVED	REV.
REVISION NOTES: REVISED PER AP 05-010, SECTION 6.10, TABLE A, TYPE 2			

WOLF CREEK NUCLEAR OPERATING CORPORATION

ELECTRONIC APPROVAL

PIPING & INSTRUMENTATION DIAGRAM CONDENSATE SYSTEM

SCALE	DRAWING NUMBER	SHEET	REV
NONE	M-12AD04		04

34AM C SIZE

Released by Document Services Release Date: 09/08/05

CONDENSER CONNECTION NUMBER	CONDENSER LOCATION HP	IP	LP	LINE NUMBER	LINE CLASS	LINE SIZE	CONNECTION SIZE	CONDENSER ISOLATION VALVE NUMBER	SERVICE	DRAWING INTERFACE NUMBER	INTERFACE DRAWING ZONE	REMARKS
321		X					3"		CONDUCTIVITY TAP			
322		X					3"		CONDUCTIVITY TAP			
323		X					3"		CONDUCTIVITY TAP			
324		X					3"		CONDUCTIVITY TAP			
325		X					3"		CONDUCTIVITY TAP			
326		X					3"		CONDUCTIVITY TAP			
327			X				3"		CONDUCTIVITY TAP			
328			X				3"		CONDUCTIVITY TAP			
329			X				3"		CONDUCTIVITY TAP			
330			X				3"		CONDUCTIVITY TAP			PLUGGED
331			X				3"		CONDUCTIVITY TAP			
332			X				3"		CONDUCTIVITY TAP			
333			X				3"		CONDUCTIVITY TAP			
334			X				3"		CONDUCTIVITY TAP			
335			X				3"		CONDUCTIVITY TAP			
336			X				3"		CONDUCTIVITY TAP			
337			X				3"		CONDUCTIVITY TAP			
338			X				3"		CONDUCTIVITY TAP			
339	X						1"		WATER SEAL OVERFLOW	AD01	H-2	
340	X						1"		WATER SEAL GAUGE GLASS (TOP)	AD01	G-2	
341	X						1"		WATER SEAL OVERFLOW	AD01	H-3	
342	X						1"		WATER SEAL GAUGE GLASS (TOP)	AD01	G-2	
343		X					1"		WATER SEAL OVERFLOW	AD01	H-5	
344		X					1"		WATER SEAL GAUGE GLASS (TOP)	AD01	G-2	
345		X					1"		WATER SEAL OVERFLOW	AD01	H-6	
346		X					1"		WATER SEAL GAUGE GLASS (TOP)	AD01	G-2	
347			X				1"		WATER SEAL OVERFLOW	AD01	H-8	
348			X				1"		WATER SEAL GAUGE GLASS (TOP)	AD01	G-2	
349			X				1"		WATER SEAL OVERFLOW	AD01	H-7	
350			X				1"		WATER SEAL GAUGE GLASS (TOP)	AD01	G-2	
351	X						1"		WATER SEAL SEAL DRAIN	AD01	H-2	
352	X						1"		WATER SEAL GAUGE GLASS (BOT.)	AD01	G-2	
353	X						1"		WATER SEAL FILL	AD01	H-3	
354	X						1"		WATER SEAL GAUGE GLASS (BOT.)	AD01	G-2	
355		X					1"		WATER SEAL FILL	AD01	H-5	
356		X					1"		WATER SEAL GAUGE GLASS (BOT.)	AD01	G-2	
357		X					1"		WATER SEAL DRAIN	AD01	H-4	
358		X					1"		WATER SEAL GAUGE GLASS (BOT.)	AD01	G-2	
359			X				1"		WATER SEAL FILL	AD01	H-8	
360			X				1"		WATER SEAL GAUGE GLASS (BOT.)	AD01	G-2	
361			X				1"		WATER SEAL DRAIN	AD01	H-7	
362			X				1"		WATER SEAL GAUGE GLASS (BOT.)	AD01	G-2	
363	24	24	24				3/4"		WATER BOX GAUGE GLASS			
364	12	12	12				3/4"		WATER BOX VENT			PLUGGED
365	X						1"	NONE	HOTWELL TEMPERATURE INST.	AD01	B-3	
366	X						1"	NONE	HOTWELL TEMPERATURE INST.	AD01	B-3	
367		X					1"	NONE	HOTWELL TEMPERATURE INST.	AD01	B-5	
368		X					1"	NONE	HOTWELL TEMPERATURE INST.	AD01	B-5	
369			X				1"	NONE	HOTWELL TEMPERATURE INST.	AD01	B-7	
370			X				1"	NONE	HOTWELL TEMPERATURE INST.	AD01	B-7	
371	X						2"	V0067	HOTWELL LEVEL INSTRUMENTATION	AD01	C-3	
372	X						2"	V0068	HOTWELL LEVEL INSTRUMENTATION	AD01	B-3	
373	X						1"		L.P. HEATER #1C - LEVEL POINT BOTTOM CONN.			
374	X						2"		L.P. HEATER #1C - INSTRUMENTATION TREE BOTTOM CONN.			
375	X						1"		L.P. HEATER #4C - LEVEL POINT (GAUGE GLASS) BOTTOM CONN.			
376	X						2"		L.P. HEATER #4C - INSTRUMENTATION TREE (LC 175, LSL 176, LSH 177) BOTT. CONN.			
377	X						2"		L.P. HEATER #1C - INSTRUMENTATION TREE BOTTOM CONN.			
378	X						2"		L.P. HEATER #2C - INSTRUMENTATION TREE BOTTOM CONN.			
379	X						2"		L.P. HEATER #3C - INSTRUMENTATION TREE (LC 167, LSHH 169) BOTTOM CONN.			
380	X						2"		L.P. HEATER #4C - INSTRUMENTATION TREE (LC 174, LSHH 173) BOTTOM CONN.			
381		X					1"		L.P. HEATER #1B - LEVEL POINT (GAUGE GLASS) BOTTOM CONN.			
382		X					2"		L.P. HEATER #1B INSTRUMENTATION TREE (LC 125, LSL 124, LSH 126) BOTTOM CONN.			
383		X					1"		L.P. HEATER #4B - LEVEL POINT (GAUGE GLASS) BOTTOM CONN.			
384		X					2"		L.P. HEATER #4B - INSTRUMENTATION TREE (LC 146, LSL 147, LSH 148) BOTTOM CONN.			
385		X					2"		L.P. HEATER #1B - INSTRUMENTATION TREE BOTTOM CONN.			
386		X					2"		L.P. HEATER #2B - INSTRUMENTATION TREE BOTTOM CONN.			
387		X					2"		L.P. HEATER #3B - INSTRUMENTATION TREE (LC 135, LSHH 136) BOTTOM CONN.			
388		X					2"		L.P. HEATER #4B - INSTRUMENTATION TREE (LC 145, LSHH 144) BOTTOM CONN.			
389			X				1"		L.P. HEATER #1A LEVEL POINT (GAUGE GLASS) BOTTOM CONN.			
390			X				2"		L.P. HEATER #1A - INSTRUMENTATION TREE (LC 115, LSL 116, LSH 117) BOTTOM CONN.			
391			X				1"		L.P. HEATER #4A - LEVEL POINT (GAUGE GLASS) BOTTOM CONN.			
392			X				2"		L.P. HEATER #4A - INSTRUMENTATION TREE (LC 115, LSL 116, LSH 117) BOTTOM CONN.			
393			X				2"		L.P. HEATER #1A - INSTRUMENTATION TREE (LC 105, LSHH 107) BOTTOM CONN.			
394			X				2"		L.P. HEATER #2A - INSTRUMENTATION TREE BOTTOM CONN.			
395			X				2"		L.P. HEATER #3A - INSTRUMENTATION TREE (LC 125, LSHH 126) BOTTOM CONN.			
396			X				2"		L.P. HEATER #4A - INSTRUMENTATION TREE (LC 114, LSHH 113) BOTTOM CONN.			
397			X				6"		CONDUCTIVITY TAP RETURN			
398			X				6"		CONDUCTIVITY TAP RETURN			PLUGGED
399		X					6"		CONDUCTIVITY TAP RETURN			
400		X					6"		CONDUCTIVITY TAP RETURN			

CONDENSER CONNECTION NUMBER	CONDENSER LOCATION HP	IP	LP	LINE NUMBER	LINE CLASS	LINE SIZE	CONNECTION SIZE	CONDENSER ISOLATION VALVE NUMBER	SERVICE	DRAWING INTERFACE NUMBER	INTERFACE DRAWING ZONE	REMARKS
401	X						6"		CONDUCTIVITY TAP RETURN			
402	X						6"		CONDUCTIVITY TAP RETURN			PLUGGED
403			X	346	H80	2"	2"	AFV11821.0	HEATER DRAIN TANK DRAIN	AF01	B-2	
404	X						2"		LEVEL INSTRUMENTATION CONN.			PLUGGED
405	X			277	H80	1.0"	1.6"	V0357	MS DRAIN TANK "C" DUMP	AF04	F-5	
406	X			278	G40	6"	6"	V0356	1ST STAGE DRAIN TANK "C" DUMP	AF04	E-7	
407	X			273	E40	6"	1.0"	V0354	2ND STAGE DRAIN TANK "C" DUMP	AF04	E-8	
408	X			275	H80	1.0"	1.6"	V0348	MS DRAIN TANK "D" DUMP	AF04	E-5	
409	X			271	G40	6"	6"	V0349	1ST STAGE DRAIN TANK "D" DUMP	AF04	E-3	
410	X			274	E40	6"	1.0"	V0345	2ND STAGE DRAIN TANK "D" DUMP	AF04	E-2	
411			X	312	H80	3"	3"	V0400	SECONDARY LIQ. WASTE SYSTEM DISCH.	HF02	E-3	
412			X	311	H80	20"	20"	NONE	MISCELLANEOUS DRAINS	AD06	C-2	NOTE 3 SCH. 80
413			X				6"		CONDUCTIVITY TAP RETURN			
414			X				6"		CONDUCTIVITY TAP RETURN			
415		X					6"		CONDUCTIVITY TAP RETURN			PLUGGED
416		X					6"		CONDUCTIVITY TAP RETURN			
417	X						6"		CONDUCTIVITY TAP RETURN			
418	X						6"		CONDUCTIVITY TAP RETURN			
419			X						THERMOWELL			
420			X						THERMOWELL			
421			X						THERMOWELL			
422			X						THERMOWELL			
423			X						THERMOWELL			
424			X						THERMOWELL			
425		X							THERMOWELL			
426		X							THERMOWELL			
427		X							THERMOWELL			
428		X							THERMOWELL			
429		X							THERMOWELL			
430		X							THERMOWELL			
431	X								THERMOWELL			
432	X								THERMOWELL			
433	X								THERMOWELL			
434	X								THERMOWELL			
435	X								THERMOWELL			
436	X								THERMOWELL			
437			X	CC-843	H80	4"	4"		CONDENSER AIR REMOVAL PIPING CONDENSATE DRAIN	CC01	G-7	
438	X			DA-847, DA-852	H80	8"	8"		STANDPIPE SPOOL DRAINS	DA01	D-8 D-6	
439												
440												
441												
442												
443	X			860	H80	2"	2"	V0460	CONDENSATE PUMP "A" VENT	AD02	E-4	
444	X			861	H80	2"	2"	V0409	CONDENSATE PUMP "B" VENT	AD02	E-6	
445	X			862	H80	2"	2"	V0470	CONDENSATE PUMP "C" VENT	AD02	E-8	
446	X			175	H80	3/4"	1"	V0385	COND. PUMP SUCT. HEADER VENT	AD01	A-3	1" X 3/4" RED. INSERT AT CONDENSER
447			X	231	H80	3/4"	1"	V0053	COND. PUMP SUCT. HEADER VENT	AD01	A-7	
448		X		335	H80	2"	2"		SGFP DRIPLEG DRAIN	FC03	D-8	
449			X	333	H80	2"	2"		SGFP DRIPLEG DRAIN	FC04	D-8	
450												
451		X		AD-427	H80	8"	8"	V0490	HEADER DRAIN TANK	AF06	B-2	

09

NOTES

1. FOR NOTES SEE DWG. M-1240B2.
2. FOR UNDERGROUND CORROSION CONCERNS, CARBON STEEL PIPING ON THIS P&ID HAS BEEN SELECTED OF 1/4 (25) MILS (.0M - ALLOY STEEL AND/OR STAINLESS STEEL PIPING. FOR DETAILS, SEE ISOMETRICS.

USAR FIG. 10.4-2, SHT.5

ESSENTIAL DRAWING

⊗ REVISED	INCORPORATED DWL DCN.	DR# 00033743	CHANGE PKG. NO.
○ VOIDED			
THIS DWG. SUPERSEDED BY	REV.	THIS DWG. SUPERSEDES	REV.
REVISION NOTES			

WOLF CREEK NUCLEAR OPERATING CORPORATION

ELECTRONIC APPROVAL

PIPING INSTRUMENTATION DIAGRAM CONDENSATE SYSTEM

SCALE	DRAWING NUMBER	SHEET	REV.
NONE	M-12AD05	09	

Released for Document Service, Release Date: 2013JUL17 08:04:49 AETWF

M-12AD05-1-09

J4144 C SE

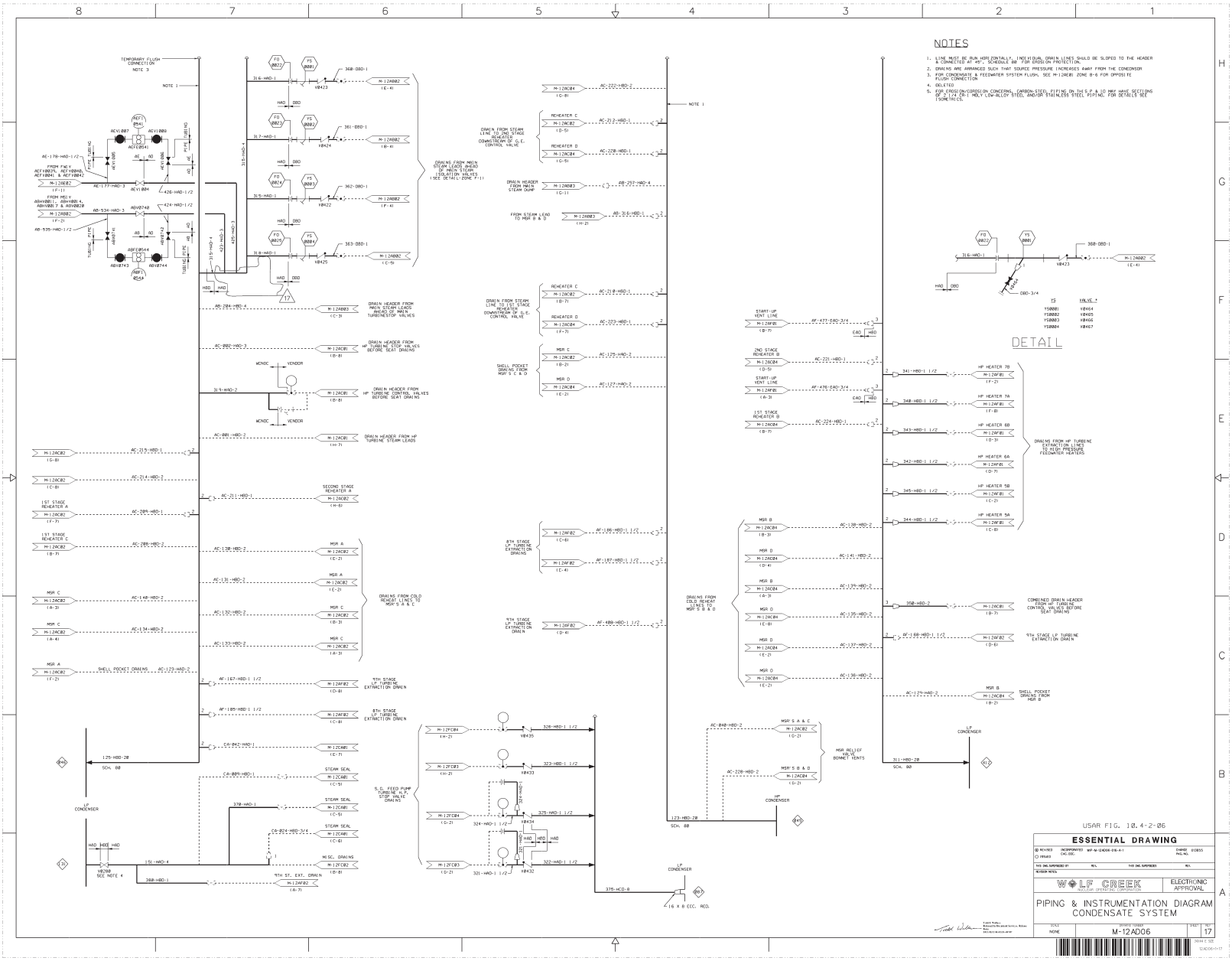
NOTES
1. LINE MUST BE RUN HORIZONTALLY. INDIVIDUAL DRAIN LINES SHALD BE SLOPED TO THE HEADER & CONNECTED AT 45°. SCHEDULE 80 FOR EROSION PROTECTION.
2. DRAINS ARE ARRANGED SUCH THAT SOURCE PRESSURE INCREASES AWAY FROM THE CONDENSER
3. FOR CONDENSATE & FEEDWATER SYSTEM FLUSH, SEE M-12AE81 ZONE B-6 FOR OPPOSITE FLUSH CONNECTION
4. DELETED
5. FOR EROSION/CORROSION CONCERNS, CARBON STEEL PIPING ON THE S.F.& LP MAY HAVE SECTIONS OF 1 1/4 CR - 1 MOLY LOW-ALLOY STEEL AND/OR STAINLESS STEEL PIPING. FOR DETAILS SEE TECHNICAL.
DETAIL
USAR FIG. 10.4-2-06
ESSENTIAL DRAWING
WOLF CREEK NUCLEAR OPERATING CORPORATION
ELECTRONIC APPROVAL
PIPING & INSTRUMENTATION DIAGRAM
CONDENSATE SYSTEM
M-12AD06
17

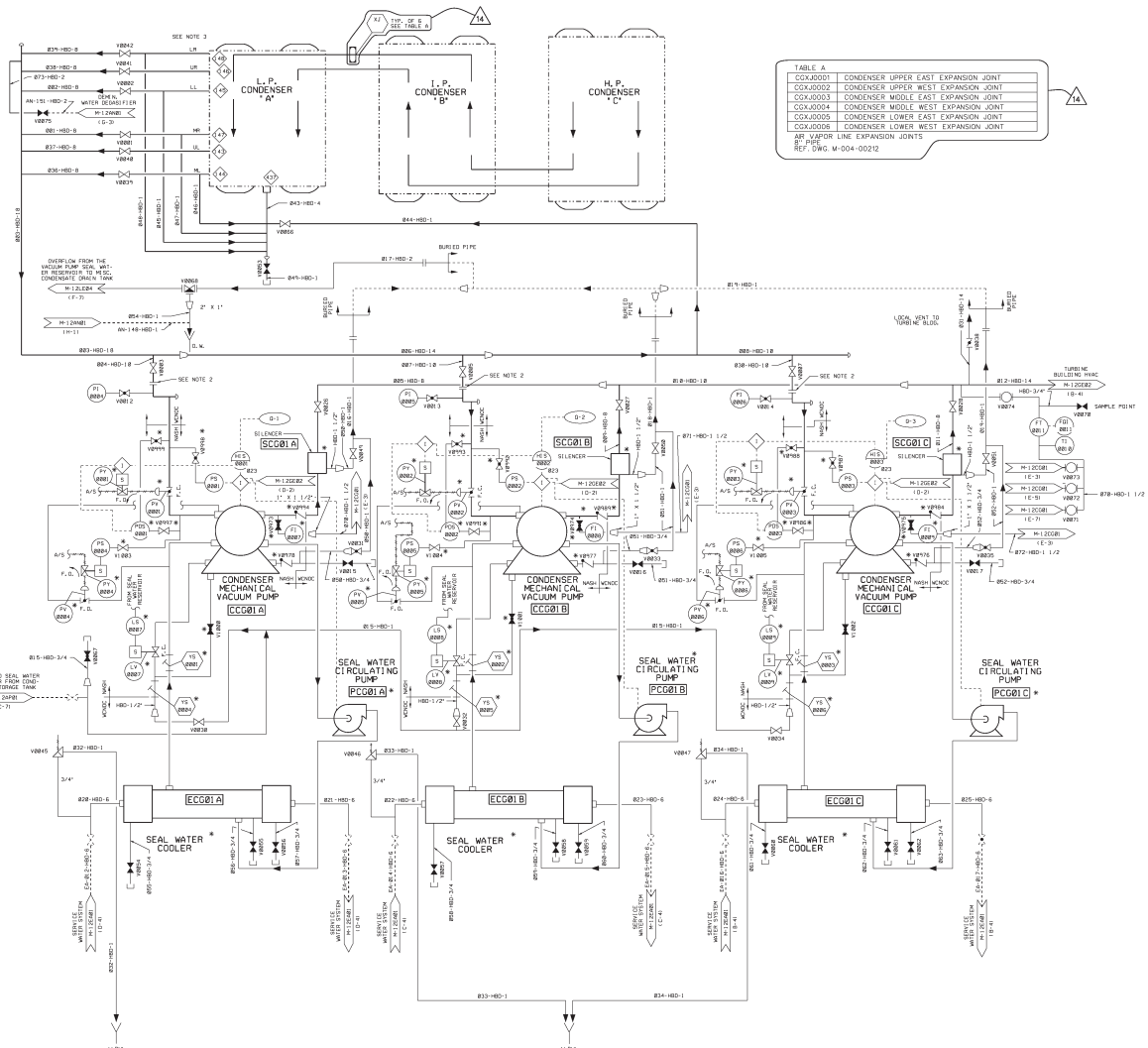

TABLE A

CGXJ0001	CONDENSER UPPER EAST EXPANSION JOINT
CGXJ0002	CONDENSER UPPER WEST EXPANSION JOINT
CGXJ0003	CONDENSER MIDDLE EAST EXPANSION JOINT
CGXJ0004	CONDENSER MIDDLE WEST EXPANSION JOINT
CGXJ0005	CONDENSER LOWER EAST EXPANSION JOINT
CGXJ0006	CONDENSER LOWER WEST EXPANSION JOINT

AIR VAPOR LINE EXPANSION JOINTS
8" PIPE
REF. DWG. M-004-00212

NOTES

1. DELETED.
2. START UP PROTECTION SCREEN PROVIDED BY NASH ENGR. CO. INSTALLED BETWEEN 18" FLANGES PROVIDED BY WCNOC.
3. AIR VAPOR LINE DESIGNATION MATCHES ITS ASSOCIATED CIRCULATING MTRL. FLOW PATH. SHOWN ON M-12DA81. WHEN LOOKING WEST AT THE CONDENSER.
4. THE DETAILED PIPING/INSTRUMENTATION SCHEME OF THE CONDENSER VACUUM PUMP IS SHOWN IN THE NASH INSTRUCTION MANUAL (WCNOC VENDOR DOCUMENT NO. 18466-M-MTE-001).
5. DELETED.
6. DELETED.

USAR FIG. 10.4-3-00

ESSENTIAL DRAWING

☒ REVISED ☐ ISSUED	INCORPORATED CH. DOC84456 CALDIG.	CHANGE PKG. NO.	
THIS DWG. SUPERSEDED BY	REV.	THIS DWG. SUPERSEDES	REV.
REVISION NOTES			

WOLF CREEK NUCLEAR OPERATING CORPORATION — ELECTRONIC APPROVAL

PIPING AND INSTRUMENTATION DIAGRAM CONDENSER AIR REMOVAL

SCALE	DRAWING NUMBER	SHEET	REV
NONE	M-12CG01		14

Check Checklist Rev. 0 Electronic Signature Release Date: 2014-05-20 10:04:49 CDT

M-12CG01-1-14

34X44 E SIZE

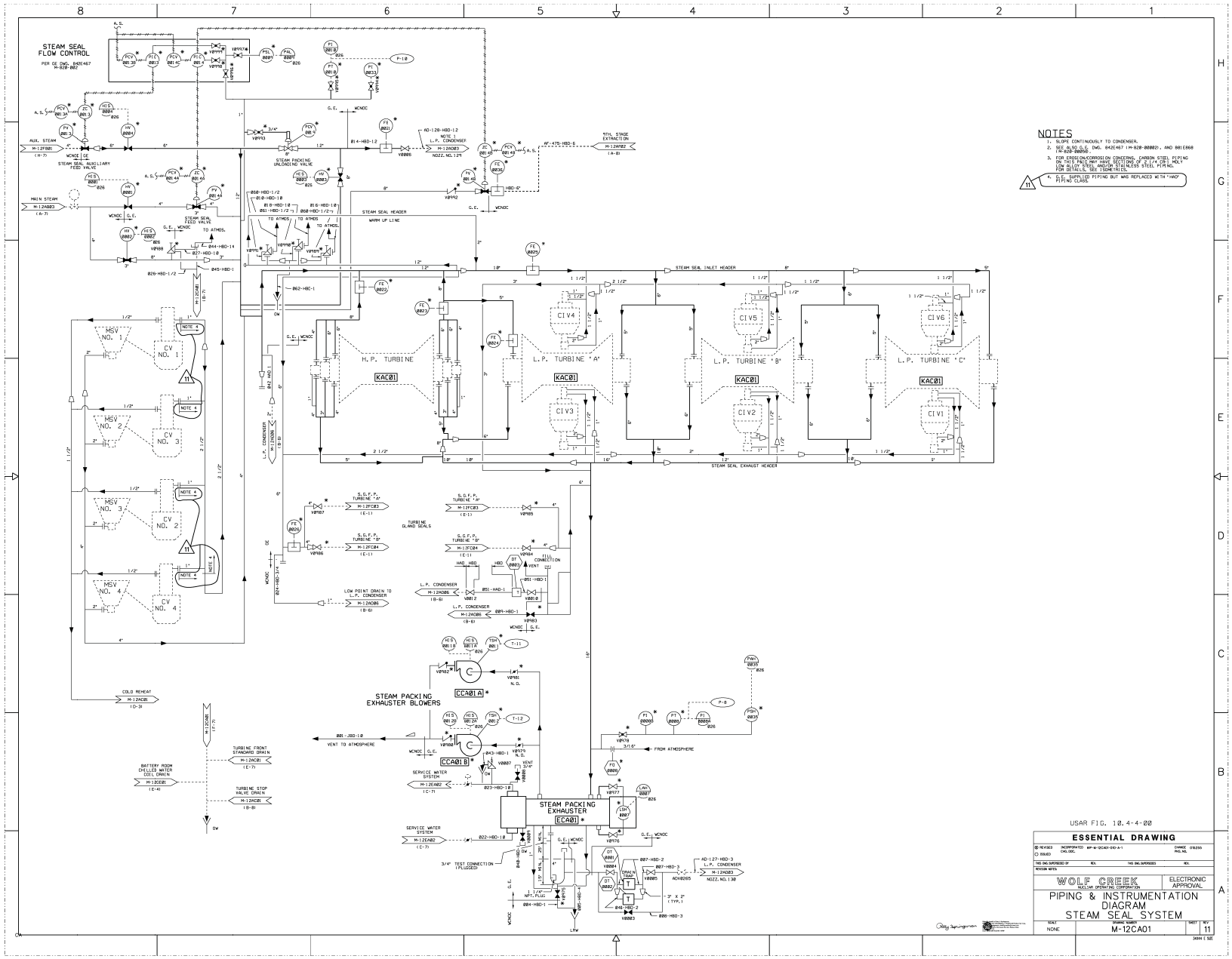
STEAM SEAL FLOW CONTROL
PER CE DWG. 842E467 M-828-882
AUX. STEAM
M-12FB81
STEAM SEAL AUXILIARY FEED VALVE
MAIN STEAM
M-12AB03
STEAM SEAL FEED VALVE
TO ATMOS.
STEAM PACKING UNLOADING VALVE
AD-128-HBD-12
NOTE 1
L.P. CONDENSER
M-12AD03
NOZZ. NO. 12R
TRTH. STAGE EXTRACTION
M-12AN02
STEAM SEAL HEADER
WARM UP LINE
STEAM SEAL INLET HEADER
STEAM SEAL EXHAUST HEADER
H.P. TURBINE
L.P. TURBINE "A"
L.P. TURBINE "B"
L.P. TURBINE "C"
KAC01
CIV1
CIV2
CIV3
CIV4
CIV5
CIV6
MSV NO. 1
MSV NO. 2
MSV NO. 3
MSV NO. 4
CV NO. 1
CV NO. 2
CV NO. 3
CV NO. 4
NOTE 4
COLD REHEAT
M-12AC80
TURBINE FRONT STANDARD DRAIN
M-12AC81
BATTERY ROOM CHILLED WATER COIL DRAIN
M-12EC81
TURBINE STOP VALVE DRAIN
M-12AC86
S.G.F.P. TURBINE "A"
M-12FC83
S.G.F.P. TURBINE "B"
M-12FC84
TURBINE GLAND SEALS
LOW POINT DRAIN TO L.P. CONDENSER
M-12AD86
L.P. CONDENSER
M-12AD86
FILL CONNECTION
STEAM PACKING EXHAUSTER BLOWERS
CCA01A
CCA01B
VENT TO ATMOSPHERE
SERVICE WATER SYSTEM
M-12EA82
FROM ATMOSPHERE
STEAM PACKING EXHAUSTER
ECA01
3/4" TEST CONNECTION (PLUGGED)
NOZZ. NO. 13R
NOTES
1. SLOPE CONTINUOUSLY TO CONDENSER.
2. SEE ALSO G.E. DWG. 842E467 (M-828-88002), AND 881E868 (M-828-88050).
3. FOR EROSION/CORROSION CONCERNS, CARBON STEEL PIPING ON THIS PAGE MAY HAVE SECTIONS OF 2 1/4 CR 1 MOL LOW ALLOY STEEL AND/OR STAINLESS STEEL PIPING. FOR DETAILS, SEE ISOMETRICS.
4. G.E. SUPPLIED PIPING BUT WAS REPLACED WITH "WCP" PIPING CLASS.
USAR FIG. 10.4-4-00
ESSENTIAL DRAWING
WOLF CREEK
NUCLEAR OPERATING CORPORATION
ELECTRONIC APPROVAL
PIPING & INSTRUMENTATION DIAGRAM
STEAM SEAL SYSTEM
SCALE NONE
DRAWING NUMBER M-12CA01
SHEET 11
REV A

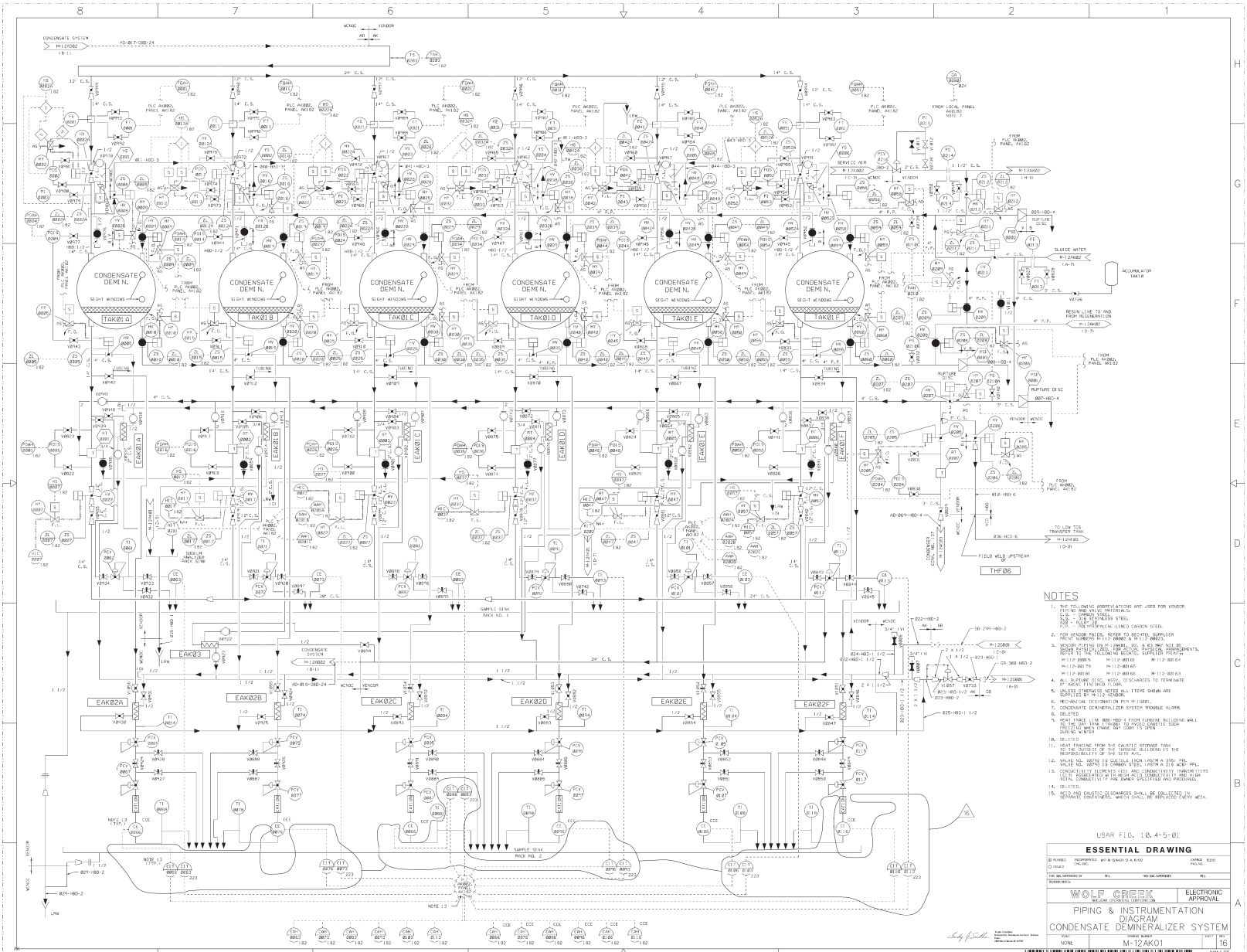

NOTES

1. THE FOLLOWING ABBREVIATIONS ARE USED FOR VENDOR SUPPLIED MATERIAL:
   CS - CARBON STEEL
   SS - 316 STAINLESS STEEL
   PVC - POLYVINYLCHLORIDE
   PP - POLYPROPYLENE LINED CARBON STEEL
2. FOR VENDOR PARTS, REFER TO BECHTEL SUPPLIER PRINT NUMBERS M-112-00002 & M-112-00003.
3. VENDOR PIPING ON M-12AK01, 02, & 03 MAY NOT BE SHOWN PHYSICALLY FOR ACTUAL PHYSICAL ARRANGEMENTS, REFER TO THE FOLLOWING BECHTEL SUPPLIER PRINTS:
   M-112-00015 M-112-00161 M-112-00164
   M-112-00179 M-112-00165
   M-112-00181 M-112-00166 M-112-00163
4. AS RUPTURE DISC ASSY. DISCHARGES TO TERMINATE BY ABOVE FINISHED FLOOR.
5. UNLESS OTHERWISE NOTED ALL ITEMS SHOWN ARE SUPPLIED BY M-112 VENDOR.
6. MECHANICAL DESIGNATION PER M-1206B.
7. CONDENSATE DEMINERALIZER SYSTEM TROUBLE ALARM.
8. DELETED
9. HEAT TRACE LINE #06-HBD-4 FROM TURBINE BUILDING WALL TO THE FIRST FLANGE STARTING FROM CAUSTIC SIDE FREEZING WHEN CHANGE BAY DOOR IS OPEN DURING WINTER
10. DELETED
11. HEAT TRACING FROM THE CAUSTIC STORAGE TANK TO THE OUTSIDE OF THE TURBINE BUILDING IS THE RESPONSIBILITY OF THE SITE A/E.
12. VALVE NO. V8770 IS DUCTILE IRON (ASTM A 395) OR VALVE NO. V8770 IS CARBON STEEL (ASTM A 216 WCB) PPL.
13. CONDUCTIVITY ELEMENTS (CE) AND CONDUCTIVITY TRANSMITTERS (CT) ASSOCIATED WITH HIGH ACID CONDUCTIVITY AND HIGH TOTAL CONDUCTIVITY ARE OWNER SPECIFIED AND PROCURED.
14. DELETED.
15. ACID AND CAUSTIC DISCHARGES SHALL BE COLLECTED IN SEPARATE CONTAINERS, WHICH SHALL BE REPLACED EVERY WEEK.

USAR FIG. 10.4-5-01

ESSENTIAL DRAWING

☒ REVISED ☐ CHANGE	INCORPORATED WP-M-SAN01-12-A 8/00 CHG DOC
CHANGE 10231 PKG NO.	
THE ENG. SUPERVISOR OF	REV.
THE ENG. SUPERVISOR	REV.
DESIGN AGENCY	

WOLF CREEK NUCLEAR OPERATING CORPORATION

ELECTRONIC APPROVAL

PIPING & INSTRUMENTATION DIAGRAM
CONDENSATE DEMINERALIZER SYSTEM

SCALE	DRAWING NUMBER	SHEET	REV.
NONE	M-12AK01		16

SIGNATURE & DATE

M-12AK01-11-16

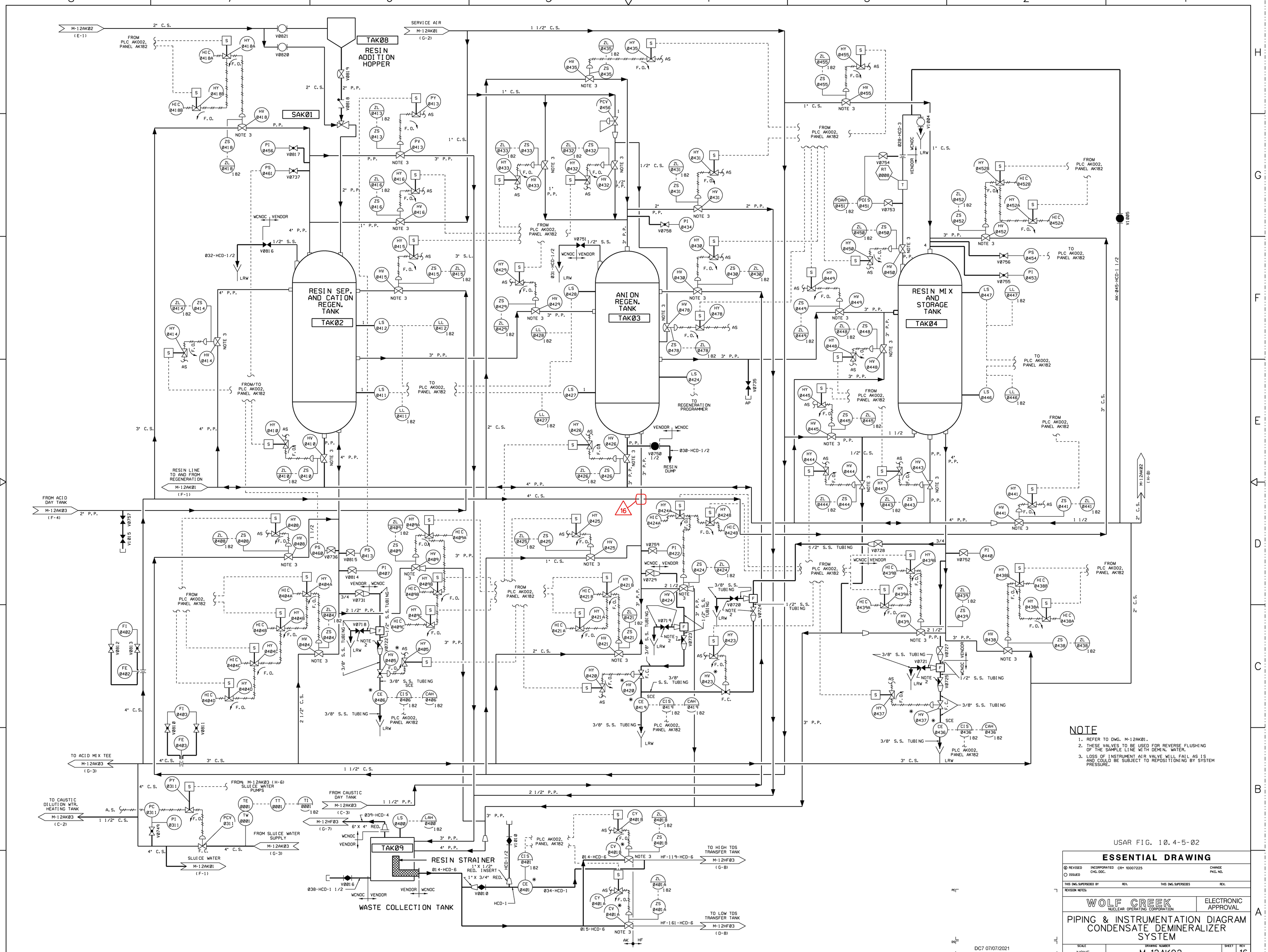

NOTE

1. REFER TO DWG. M-12AK01.
2. THESE VALVES TO BE USED FOR REVERSE FLUSHING OF THE SAMPLE LINE WITH DEMIN. WATER.
3. LOSS OF INSTRUMENT AIR VALVE WILL FAIL AS IS AND COULD BE SUBJECT TO REPOSITIONING BY SYSTEM PRESSURE.

USAR FIG. 10.4-5-02

ESSENTIAL DRAWING

REVISED / ISSUED — INCORPORATED CHG. DOC. CR* 10007225 — CHANGE PKG. NO.

THIS DWG. SUPERSEDED BY — REV. — THIS DWG. SUPERSEDES — REV.

REVISION NOTES:

WOLF CREEK NUCLEAR OPERATING CORPORATION — ELECTRONIC APPROVAL

PIPING & INSTRUMENTATION DIAGRAM
CONDENSATE DEMINERALIZER SYSTEM

SCALE	DRAWING NUMBER	SHEET	REV
NONE	M-12AK02		16

DC7 07/07/2021

34X44 E SIZE

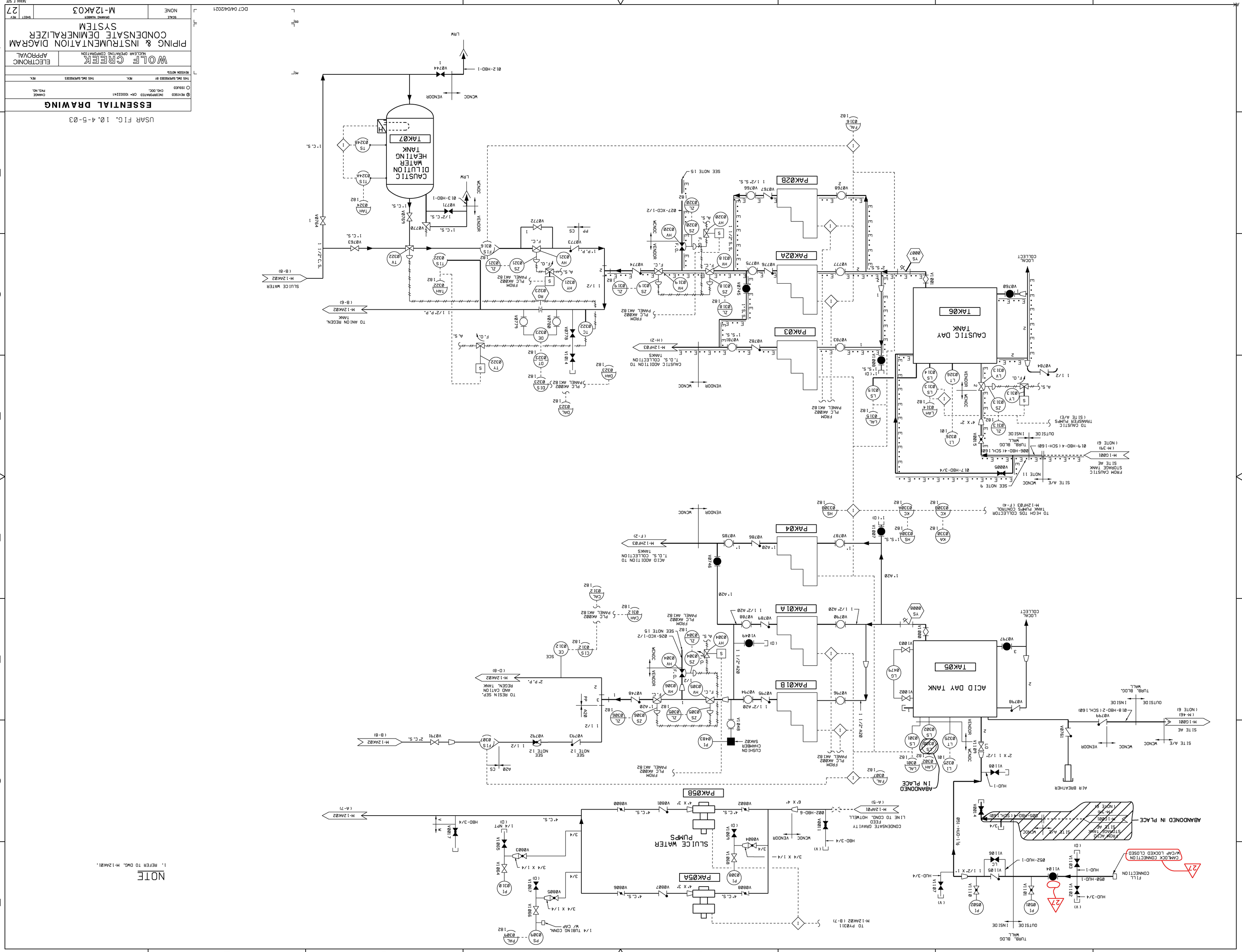
USAR FIG. 10.4-5-03
ESSENTIAL DRAWING
REVISED
ISSUED
INCORPORATED CR# 10002241
CHG. DOC.
CHANGE PKG. NO.
THIS DWG. SUPERSEDED BY
REV.
THIS DWG. SUPERSEDES
REV.
REVISION NOTES:
WOLF CREEK
NUCLEAR OPERATING CORPORATION
ELECTRONIC APPROVAL
PIPING & INSTRUMENTATION DIAGRAM
CONDENSATE DEMINERALIZER SYSTEM
SCALE NONE
DRAWING NUMBER M-12AK03
SHEET 27
REV
DC7 04/04/2021
34X44 E SIZE
CAUSTIC DILUTION WATER HEATING TANK
TAK07
CAUSTIC DAY TANK
TAK06
ACID DAY TANK
TAK05
PAK01A
PAK01B
PAK02A
PAK02B
PAK03
PAK04
PAK05A
PAK05B
SLUICE WATER PUMPS
ABANDONED IN PLACE
CAM-LOCK CONNECTION W/CAP LOCKED CLOSED
NOTE
1. REFER TO DWG. M-12AK01.

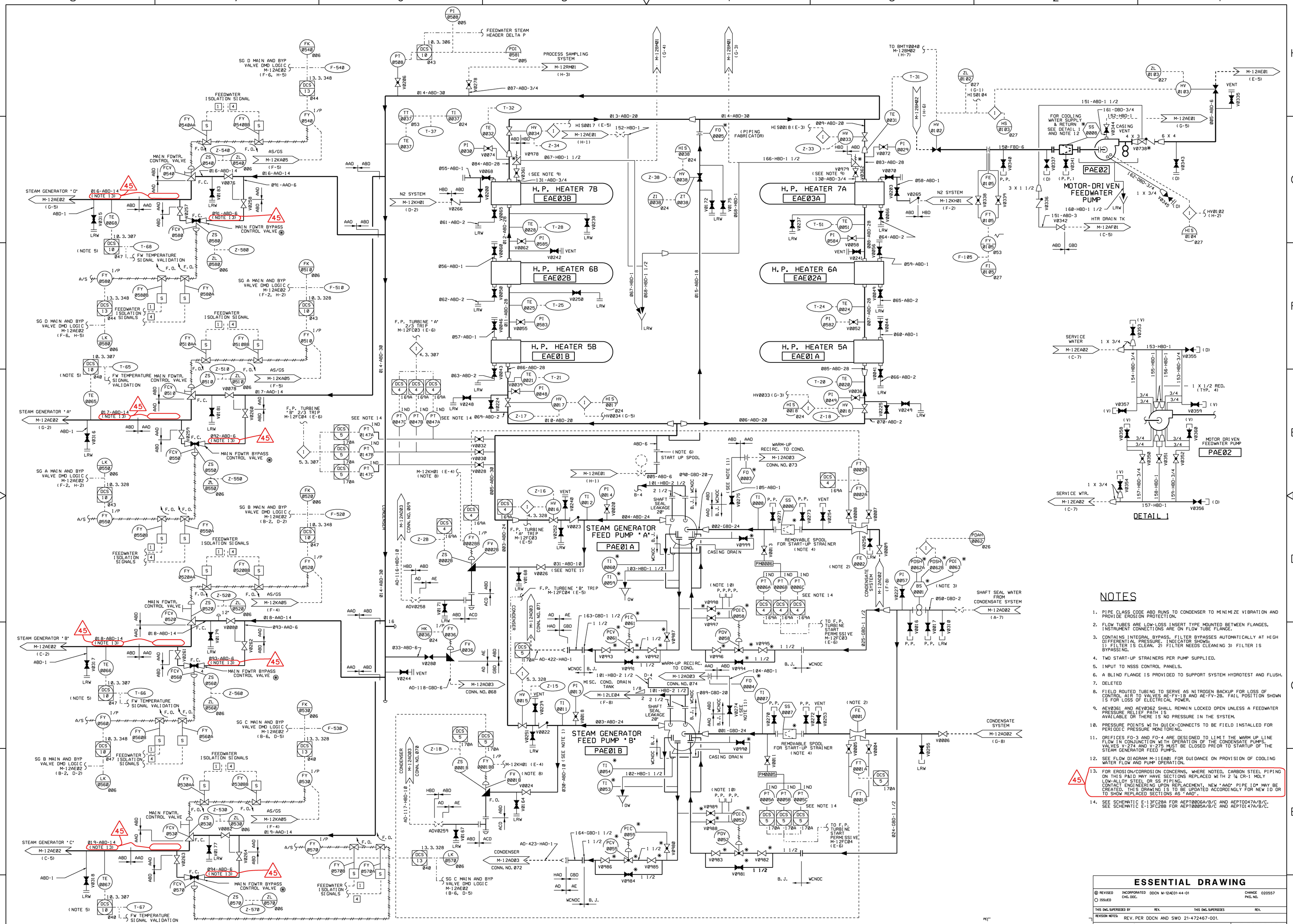

NOTES

1. PIPE CLASS CODE ABD RUNS TO CONDENSER TO MINIMIZE VIBRATION AND PROVIDE EROSION PROTECTION.
2. FLOW TUBES ARE LOW-LOSS INSERT TYPE MOUNTED BETWEEN FLANGES, INSTRUMENT CONNECTIONS ARE ON FLOW TUBE FLANGE.
3. CONTAINS INTEGRAL BYPASS. FILTER BYPASSES AUTOMATICALLY AT HIGH DIFFERENTIAL PRESSURE. INDICATOR SHOWS: 1) FILTER IS CLEAN. 2) FILTER NEEDS CLEANING 3) FILTER IS BYPASSING.
4. TWO START-UP STRAINERS PER PUMP SUPPLIED.
5. INPUT TO NSSS CONTROL PANELS.
6. A BLIND FLANGE IS PROVIDED TO SUPPORT SYSTEM HYDROTEST AND FLUSH.
7. DELETED
8. FIELD ROUTED TUBING TO SERVE AS NITROGEN BACKUP FOR LOSS OF CONTROL AIR TO VALVES AE-FV-1B AND AE-FV-2B. FAIL POSITION SHOWN IS FOR LOSS OF ELECTRICAL POWER.
9. AEV0361 AND AEV0362 SHALL REMAIN LOCKED OPEN UNLESS A FEEDWATER PRESSURE RELIEF PATH IS AVAILABLE OR THERE IS NO PRESSURE IN THE SYSTEM.
10. PRESSURE POINTS WITH QUICK-CONNECTS TO BE FIELD INSTALLED FOR PERIODIC PRESSURE MONITORING.
11. ORIFICES FO-3 AND FO-4 ARE DESIGNED TO LIMIT THE WARM UP LINE FLOW IN CONJUNCTION WITH OPERATION OF THE CONDENSATE PUMPS. VALVES V-274 AND V-275 MUST BE CLOSED PRIOR TO STARTUP OF THE STEAM GENERATOR FEED PUMPS.
12. SEE FLOW DIAGRAM M-11EA01 FOR GUIDANCE ON PROVISION OF COOLING WATER FLOW AND PUMP OPERATION.
13. FOR EROSION/CORROSION CONCERNS, WHERE NOTED, CARBON STEEL PIPING ON THIS P&ID MAY HAVE SECTIONS REPLACED WITH 2 ¼ CR-1 MOLY LOW-ALLOY STEEL OR SS PIPING. CONTACT ENGINEERING UPON REPLACEMENT. NEW "AAD" PIPE ID* MAY BE CREATED. THIS DRAWING IS TO BE UPDATED ACCORDINGLY FOR NEW ID OR TO SHOW REPLACED SECTIONS AS "AAD". (45)
14. SEE SCHEMATIC E-1-3FC28A FOR AEPT0026A/B/C AND AEPT0047A/B/C. SEE SCHEMATIC E-1-3FC28B FOR AEPT0025A/B/C AND AEPT0147A/B/C.

ESSENTIAL DRAWING

(X) REVISED INCORPORATED DDCN M-12AE01-44-01 CHANGE 020557
( ) ISSUED CHG. DOC. PKG. NO.

THIS DWG. SUPERSEDED BY REV. THIS DWG. SUPERSEDES REV.

REVISION NOTES: REV. PER DDCN AND SWO 21-472467-001.

WOLF CREEK NUCLEAR OPERATING CORPORATION

ELECTRONIC APPROVAL

PIPING & INSTRUMENTATION DIAGRAM FEEDWATER SYSTEM

SCALE	DRAWING NUMBER	SHEET	REV
NONE	M-12AE01		45

DC7 12/27/2021

34X44 E SIZE

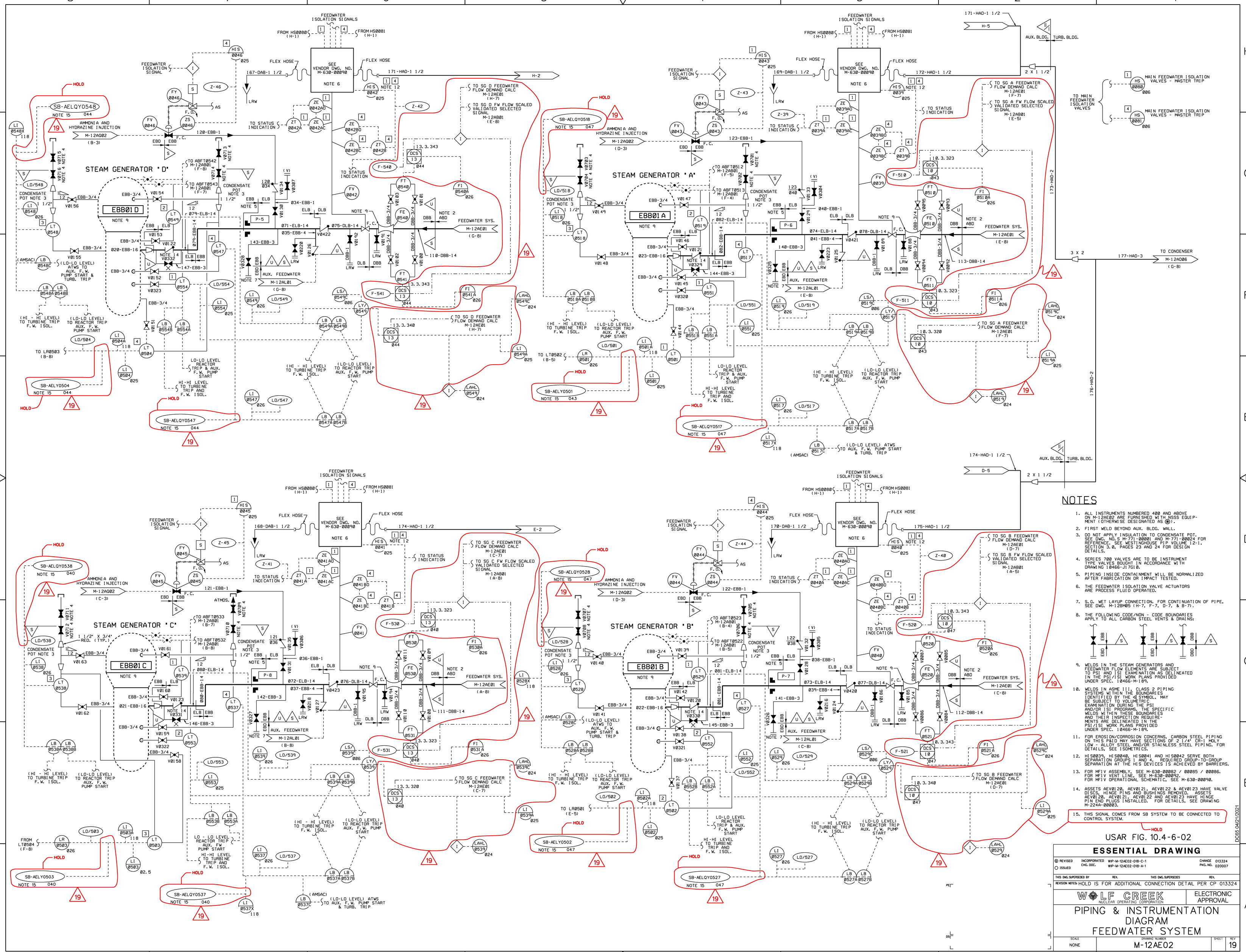

NOTES

1. ALL INSTRUMENTS NUMBERED 400 AND ABOVE ON M-12AE02 ARE FURNISHED WITH NSSS EQUIPMENT (OTHERWISE DESIGNATED AS ⊛).
2. FIRST WELD BEYOND AUX. BLDG. WALL.
3. DO NOT APPLY INSULATION TO CONDENSATE POT. SEE DWG. NO.S M-771-00001 AND M-771-00024 FOR REFERENCE. SEE WESTINGHOUSE PIP VOLUME 12-1, SECTION 3.0, PAGES 23 AND 24 FOR DESIGN DETAILS.
4. SERIES 700 VALVES ARE TO BE INSTRUMENT TYPE VALVES BOUGHT IN ACCORDANCE WITH DRAWING 10466-J17G10.
5. PIPING INSIDE CONTAINMENT WILL BE NORMALIZED AFTER FABRICATION OR IMPACT TESTED.
6. THE FEEDWATER ISOLATION VALVE ACTUATORS ARE PROCESS FLUID OPERATED.
7. S.G. WET LAYUP CONNECTION. FOR CONTINUATION OF PIPE, SEE DWG. M-12BM05 (H-7, F-7, D-7, & B-7).
8. THE FOLLOWING CODE/NON - CODE BOUNDARIES APPLY TO ALL CARBON STEEL VENTS & DRAINS:

9. WELDS IN THE STEAM GENERATORS AND FEEDWATER FLOW ELEMENTS ARE SUBJECT TO PSI AND ISI EXAMINATION AS DELINEATED IN THE PSI/ISI WORK PLANS PROVIDED UNDER SPEC. 10466-M-189.
10. WELDS IN ASME III, CLASS 2 PIPING SYSTEMS WITHIN THE BOUNDARIES IDENTIFIED BY THE ⊛ SYMBOL, MAY BE SUBJECT TO VOLUMETRIC EXAMINATION DURING THE PSI AND/OR ISI PROGRAMS. THE SPECIFIC WELDS WITHIN THESE BOUNDARIES AND THEIR INSPECTION REQUIREMENTS ARE DELINEATED IN THE PSI/ISI WORK PLANS PROVIDED UNDER SPEC. 10466-M-189.
11. FOR EROSION/CORROSION CONCERNS, CARBON STEEL PIPING ON THIS P&ID MAY HAVE SECTIONS OF 2 1/4" CR-1 MOLY LOW - ALLOY STEEL AND/OR STAINLESS STEEL PIPING. FOR DETAILS, SEE ISOMETRICS.
12. HIS0039, HIS0040, HIS0041 AND HIS0042 SERVE BOTH SEPARATION GROUPS 1 AND 4. REQUIRED GROUP-TO-GROUP SEPARATION AT THE HIS DEVICES IS ACHIEVED BY BARRIERS.
13. FOR MFIV ASSEMBLY, SEE M-630-00062 / 00085 / 00086. FOR MFIV VENT LINE, SEE M-630-00092. FOR MFIV OPERATIONAL SCHEMATIC, SEE M-630-00090.
14. ASSETS AEV0120, AEV0121, AEV0122 & AEV0123 HAVE VALVE DISCS, HINGE PINS AND BUSHINGS REMOVED. ASSETS AEV0120, AEV0121, AEV0122 AND AEV0123 HAVE HINGE PIN END PLUGS INSTALLED. FOR DETAILS, SEE DRAWING M-224A-00003.
15. THIS SIGNAL COMES FROM SB SYSTEM TO BE CONNECTED TO CONTROL SYSTEM. HOLD

USAR FIG. 10.4-6-02

ESSENTIAL DRAWING

⊗ REVISED / ○ ISSUED	INCORPORATED CHG. DOC.	WIP-M-12AE02-018-C-1 / WIP-M-12AE02-018-A-1	CHANGE 013324 PKG. NO. 020007
THIS DWG. SUPERSEDED BY	REV.	THIS DWG. SUPERSEDES	REV.

REVISION NOTES: HOLD IS FOR ADDITIONAL CONNECTION DETAIL PER CP 013324

WOLF CREEK NUCLEAR OPERATING CORPORATION — ELECTRONIC APPROVAL

PIPING & INSTRUMENTATION DIAGRAM FEEDWATER SYSTEM

SCALE	DRAWING NUMBER	SHEET	REV
NONE	M-12AE02		19

34X44 E SIZE

DC65 04/21/2021

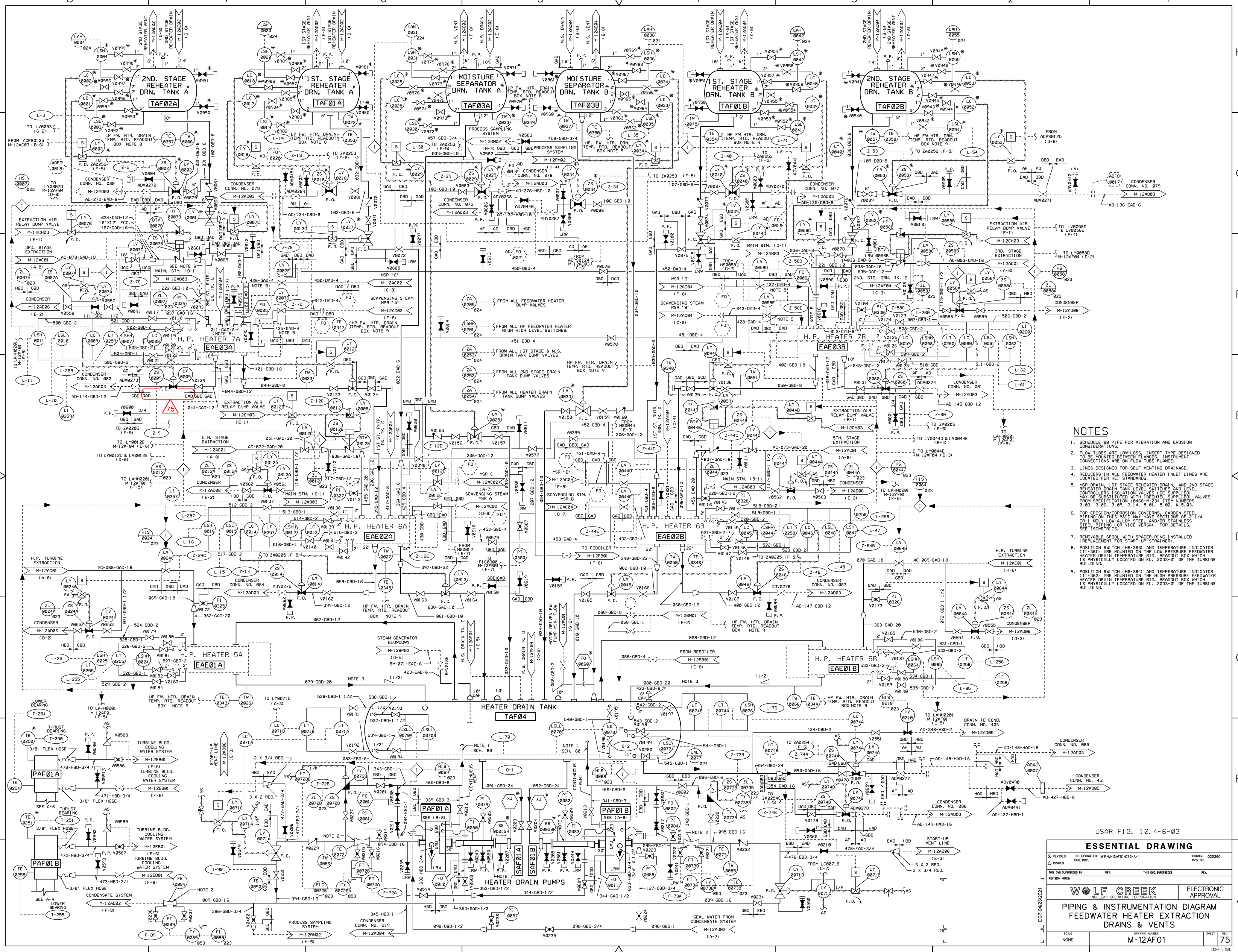
2ND. STAGE REHEATER DRN. TANK A
TAF02A
1ST. STAGE REHEATER DRN. TANK A
TAF01A
MOISTURE SEPARATOR DRN. TANK A
TAF03A
MOISTURE SEPARATOR DRN. TANK B
TAF03B
1ST. STAGE REHEATER DRN. TANK B
TAF01B
2ND. STAGE REHEATER DRN. TANK B
TAF02B
H.P. HEATER 7A
EAE03A
H.P. HEATER 7B
EAE03B
H.P. HEATER 6A
EAE02A
H.P. HEATER 6B
EAE02B
H.P. HEATER 5A
EAE01A
H.P. HEATER 5B
EAE01B
HEATER DRAIN TANK
TAF04
HEATER DRAIN PUMPS
PAF01A
PAF01B
SAF01A
SAF01B
NOTES
1. SCHEDULE 80 PIPE FOR VIBRATION AND EROSION CONSIDERATIONS.
2. FLOW TUBES ARE LOW-LOSS, INSERT TYPE DESIGNED TO BE MOUNTED BETWEEN FLANGES. INSTRUMENT CONNECTIONS ARE ON FLOW TUBE FLANGE.
3. LINES DESIGNED FOR SELF-VENTING DRAINAGE.
4. REDUCERS IN ALL FEEDWATER HEATER INLET LINES ARE LOCATED PER HEI STANDARDS.
5. MSR DRAIN, 1ST STAGE REHEATER DRAIN, AND 2ND STAGE REHEATER DRAIN TANK LEVEL SWITCHES AND LEVEL CONTROLLERS (ISOLATION VALVES (GE SUPPLIED) MAY BE SUBSTITUTED WITH (BECHTEL SUPPLIED) VALVES FROM SPECIFICATION 10466-M-234 ITEM NUMBERS 3.03, 3.06, 3.09, 3.14, 5.01, 5.02, & 5.03.
6. FOR EROSION/CORROSION CONCERNS, CARBON-STEEL PIPING ON THIS P&ID MAY HAVE SECTIONS OF 2 1/4 CR-1 MOLY LOW-ALLOY STEEL AND/OR STAINLESS STEEL PIPING (OR VICE VERSA). FOR DETAILS, SEE ISOMETRICS.
7. REMOVABLE SPOOL WITH SPACER RING INSTALLED (REPLACEMENT FOR START-UP STRAINER).
8. POSITION SWITCH (HS-363) AND TEMPERATURE INDICATOR (TI-361) ARE MOUNTED ON THE LOW PRESSURE FEEDWATER HEATER DRAIN TEMPERATURE RTD. READOUT BOX WHICH IS PHYSICALLY LOCATED ON EL. 2033-0' OF THE TURBINE BUILDING.
9. POSITION SWITCH (HS-364) AND TEMPERATURE INDICATOR (TI-362) ARE MOUNTED ON THE HIGH PRESSURE FEEDWATER HEATER DRAIN TEMPERATURE RTD. READOUT BOX WHICH IS PHYSICALLY LOCATED ON EL. 2033-0' OF THE TURBINE BUILDING.
USAR FIG. 10.4-6-03
ESSENTIAL DRAWING
REVISED
ISSUED
INCORPORATED CHG. DOC.
WIP-M-12AF01-073-A-1
CHANGE PKG. NO.
020260
THIS DWG. SUPERSEDES
REV.
THIS DWG. SUPERSEDES
REV.
REVISION NOTES:
WOLF CREEK NUCLEAR OPERATING CORPORATION
ELECTRONIC APPROVAL
PIPING & INSTRUMENTATION DIAGRAM
FEEDWATER HEATER EXTRACTION
DRAINS & VENTS
SCALE
NONE
DRAWING NUMBER
M-12AF01
SHEET
REV
75
DC7 04/23/2021
34X44 E SIZE

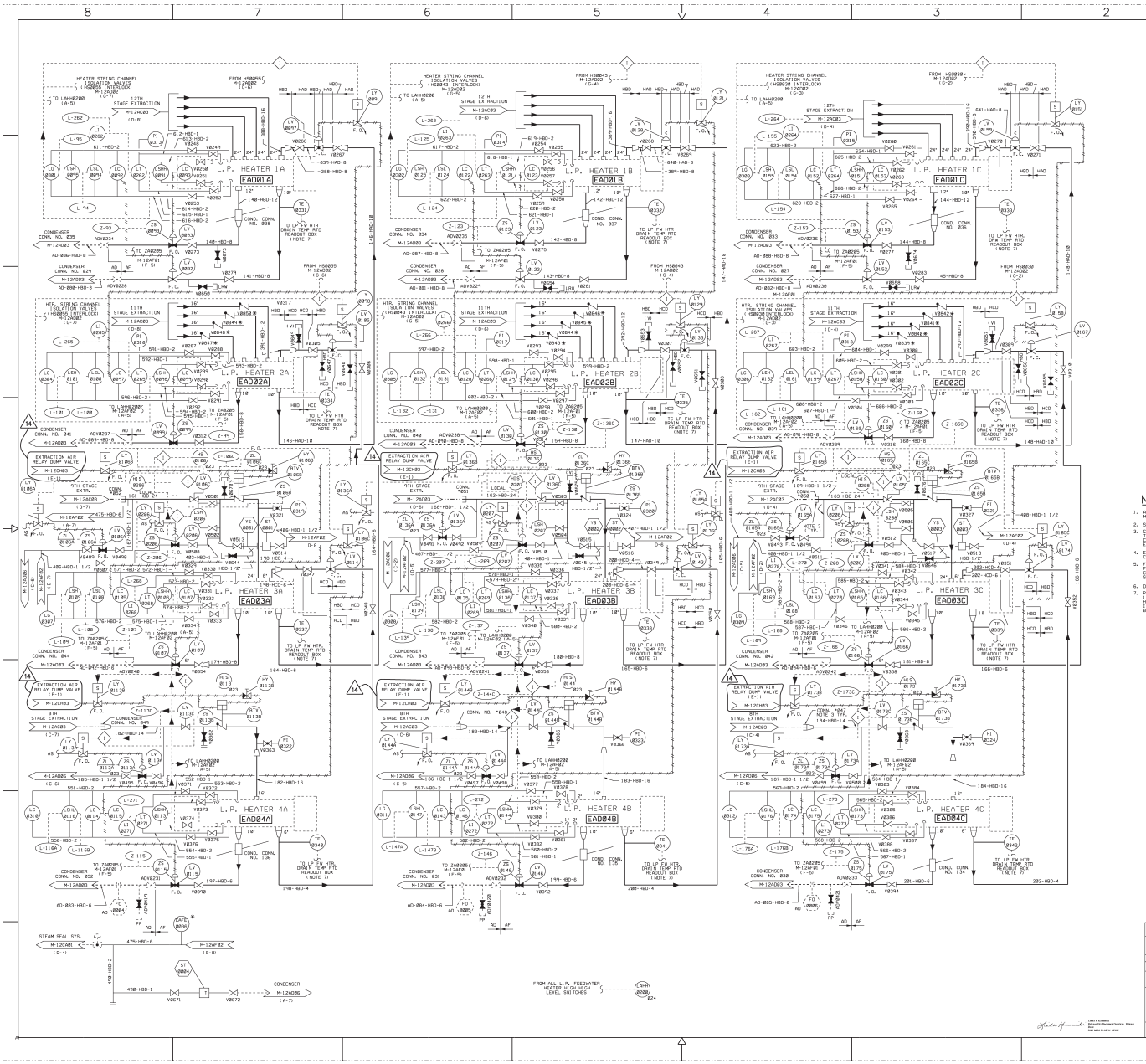

NOTES

1. ALL HEATER DRAIN DUMP VALVES POSITION MONITORING TO ZA-285 (M-12AF6), F-5I
2. SUPPLIED BY HEATER MANUFACTURER.
3. CONDENSER "CONNECTION" IS A HOLE FOR THE PIPING. THE OPENING BETWEEN THE CONDENSER AND PIPING IS CLOSED BY AN EXPANSION JOINT SUPPLIED BY T.B.A.
4. EXTRACTION PIPING TO FEEDWATER HEATERS INSIDE THE CONDENSER SUPPLIED BY CONDENSER SUPPLIER.
5. FOR EROSION/CORROSION CONCERNS, CARBON STEEL PIPING WITH LOW PARTS WITH HIGH VELOCITY 1/4 OR 1/2 INCH WALL THICKNESS. HIGHER STAINLESS STEEL PIPING. FOR DETAILS, SEE ISOMETRICS.
6. DELETED.
7. POSITION SWITCH (HS-363) AND TEMPERATURE INDICATOR (TI-363) ARE MOUNTED ON THE LOW PRESSURE FEEDWATER HEATER DRAIN TEMPERATURE RTD READOUT BOX WHICH IS PHYSICALLY LOCATED ON EL. 2033'-8" OF THE TURBINE BUILDING.

USAR FIG. 10.4-6-04

ESSENTIAL DRAWING

ⓐ REVISED	INCORPORATED CH# 0008043 CHG.DEC.	CHANGE PKG. NO.	
ⓒ ISSUED			
THIS DWG.SUPERSEDES OF	REV.	THIS DWG.SUPERSEDES	REV.
REVISION NOTES			

WOLF CREEK NUCLEAR OPERATING CORPORATION

ELECTRONIC APPROVAL

PIPING & INSTRUMENTATION DIAGRAM FEEDWATER HEATER EXTRACTION DRAINS & VENTS

SCALE	DRAWING NUMBER	SHEET	REV
NONE	M-12AF02	14	A

Sargent & Lundy LLC
Chicago, Illinois
Architect-Engineer and Constructor Bechtel Power Corporation
Gaithersburg, Maryland

M-444 E 002

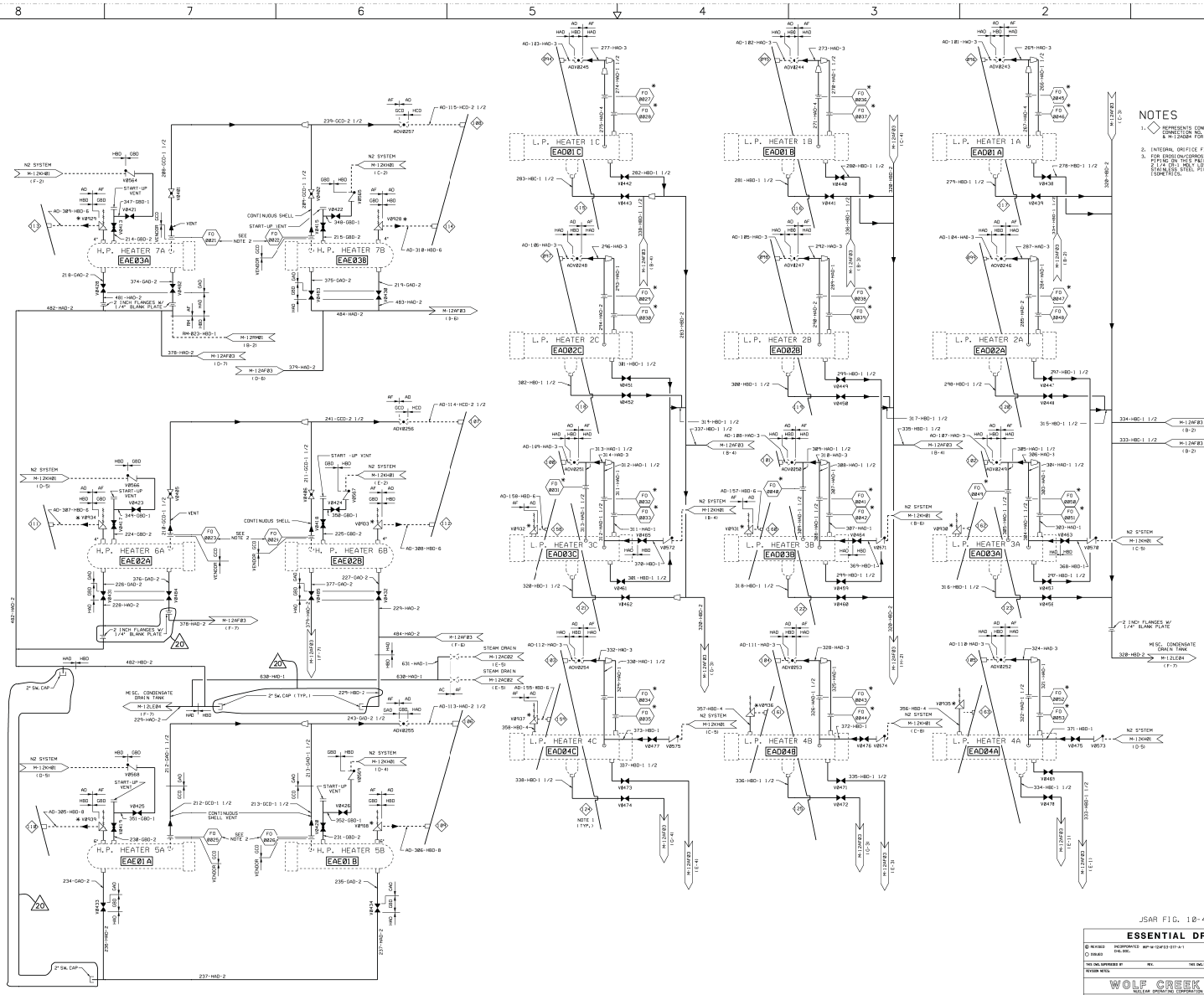

JSAR FIG. 10-4-6-05

ESSENTIAL DRAWING

☒ AS BUILT ☐ FIELD	INCORPORATED DCN, DDC: AMP-M-12AF03-DTF-A-1
CHANGE PKG. NO.	08255
THIS DWG. SUPERSEDES BY	REV.
THIS DWG. SUPERSEDES	REV.
REVISION NOTES:	

WOLF CREEK NUCLEAR OPERATING CORPORATION

ELECTRONIC APPROVAL

PIPING & INSTRUMENTATION DIAGRAM
FEEDWATER HEATER EXTRACTION
DRAINS & VENTS

SCALE	DRAWING NUMBER	SHEET	REV
NONE	M-12AF03	20	A

34244 C SIZE

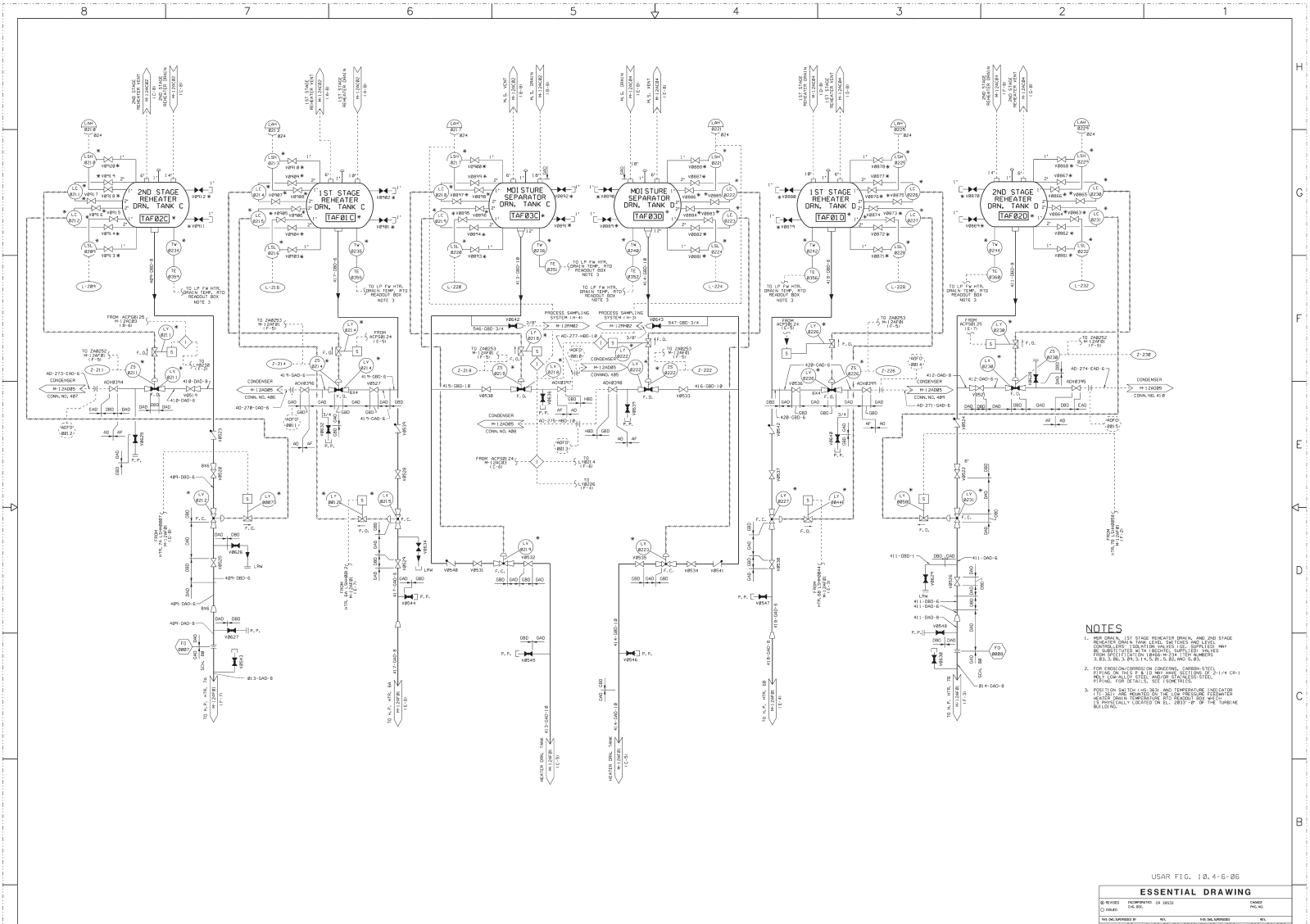

NOTES

1. MSR DRAIN, 1ST STAGE REHEATER DRAIN, AND 2ND STAGE REHEATER DRAIN VALVES ARE SHOWN AS ELECTRIC MOTOR CONTROLLED ISOLATION VALVES (IOS). SUPPLIED MAY BE SUBSTITUTED WITH (MECHTS. SUPPLIED) VALVES FROM SPECIFICATION (M08-M-234 ITEM NUMBERS 3.03, 3.06, 3.09, 3.14, 5.01, 5.02 AND 5.03.

2. FOR EROSION/CORROSION CONCERNS, CARBON-STEEL PIPING ON THESE F-B, TO MAY HAVE SECTIONS OF 2-1/4 CR-1 MOLY CHROME STEEL AND/OR ALTERNATE 55-STEEL PIPING. FOR DETAILS, SEE ISOMETRICS.

3. PRESSURE SWITCH (LS-363) AND TEMPERATURE INDICATOR (TI-287) ARE MOUNTED ON THE LOW PRESSURE FEEDWATER HEATER DRAIN TANK LEVEL GAUGE WHICH IS PHYSICALLY LOCATED ON EL. 2033'-6" OF THE TURBINE BUILDING.

USAR FIG. 10.4-6-06

ESSENTIAL DRAWING

⊗ REVISED	INCORPORATED CR 19532	CHANGE
○ ISSUED	CHG. DOC.	PKG. NO.

THIS CHG. SUPERSEDES BY REV. THIS CHG. SUPERSEDES REV.

REVISION NOTE: DRAWING ISSUED TO REGENERATE CUSTOM LINESTYLES PER CR 19532

WOLF CREEK NUCLEAR OPERATING CORPORATION — ELECTRONIC APPROVAL

PIPING & INSTRUMENTATION DIAGRAM
FEEDWATER HEATER EXTRACTION
DRAIN & VENTS

SCALE	DRAWING NUMBER	SHEET
NONE	M-12AF04	19

Released by Document Services. Release Date: 2011/12/08 09:51:36 CST

M-12AF04-1-19

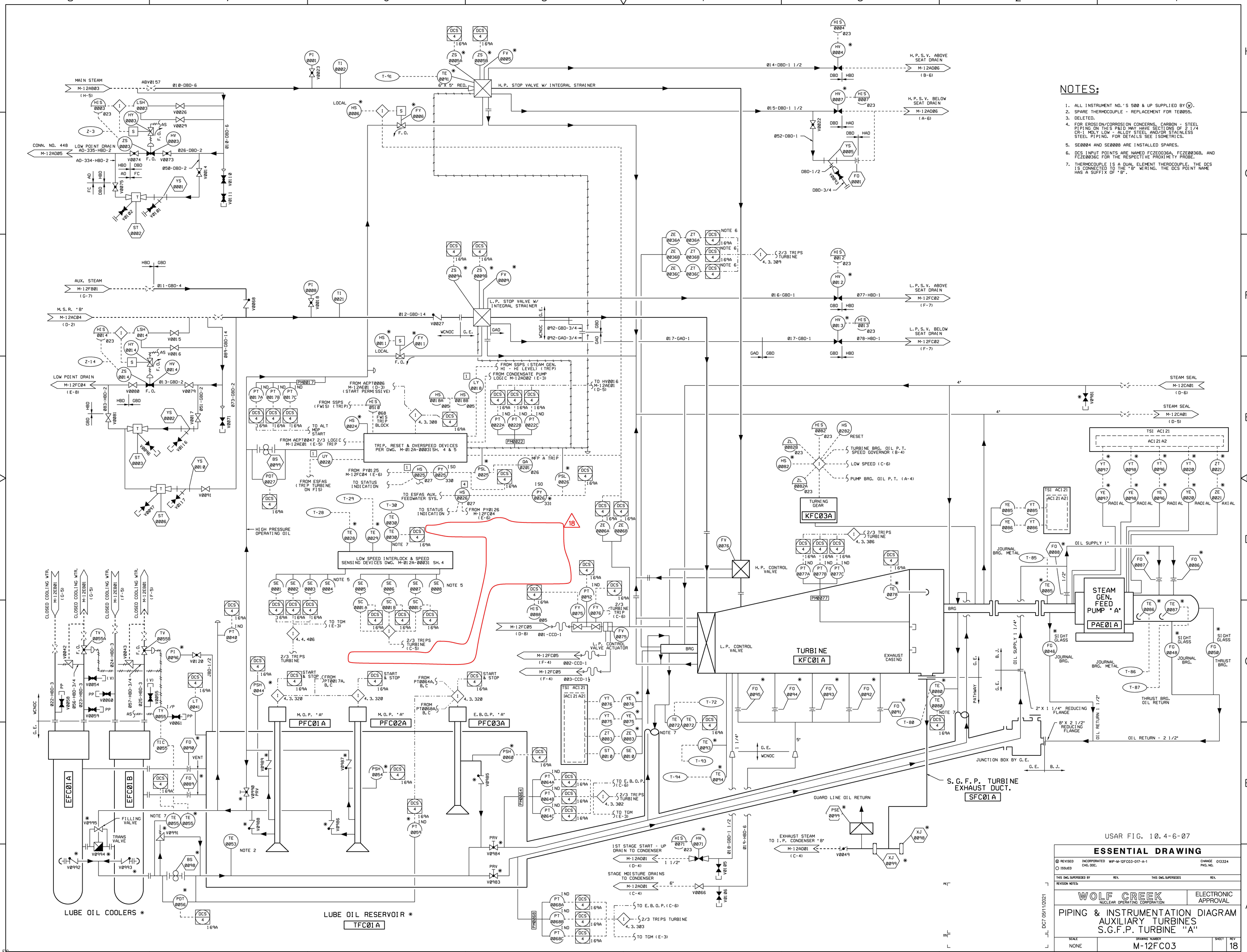

NOTES:

1. ALL INSTRUMENT NO.'S 500 & UP SUPPLIED BY (W).
2. SPARE THERMOCOUPLE - REPLACEMENT FOR TE0055.
3. DELETED.
4. FOR EROSION/CORROSION CONCERNS, CARBON - STEEL PIPING ON THIS P&ID MAY HAVE SECTIONS OF 2 1/4 CR-1 MOLY LOW - ALLOY STEEL AND/OR STAINLESS STEEL PIPING. FOR DETAILS SEE ISOMETRICS.
5. SE0004 AND SE0008 ARE INSTALLED SPARES.
6. DCS INPUT POINTS ARE NAMED FCZE0036A, FCZE0036B, AND FCZE0036C FOR THE RESPECTIVE PROXIMITY PROBE.
7. THERMOCOUPLE IS A DUAL ELEMENT THEROCOUPLE. THE DCS IS CONNECTED TO THE 'B' WIRING. THE DCS POINT NAME HAS A SUFFIX OF 'B'.

USAR FIG. 10.4-6-07

ESSENTIAL DRAWING

(X) REVISED ( ) ISSUED — INCORPORATED CHG. DOC. WIP-M-12FC03-017-A-1 — CHANGE PKG. NO. 013324

THIS DWG. SUPERSEDED BY — REV. — THIS DWG. SUPERSEDES — REV.

REVISION NOTES:

WOLF CREEK NUCLEAR OPERATING CORPORATION — ELECTRONIC APPROVAL

PIPING & INSTRUMENTATION DIAGRAM
AUXILIARY TURBINES
S.G.F.P. TURBINE "A"

SCALE	DRAWING NUMBER	SHEET	REV
NONE	M-12FC03		18

34X44 E SIZE

DC7 05/11/2021

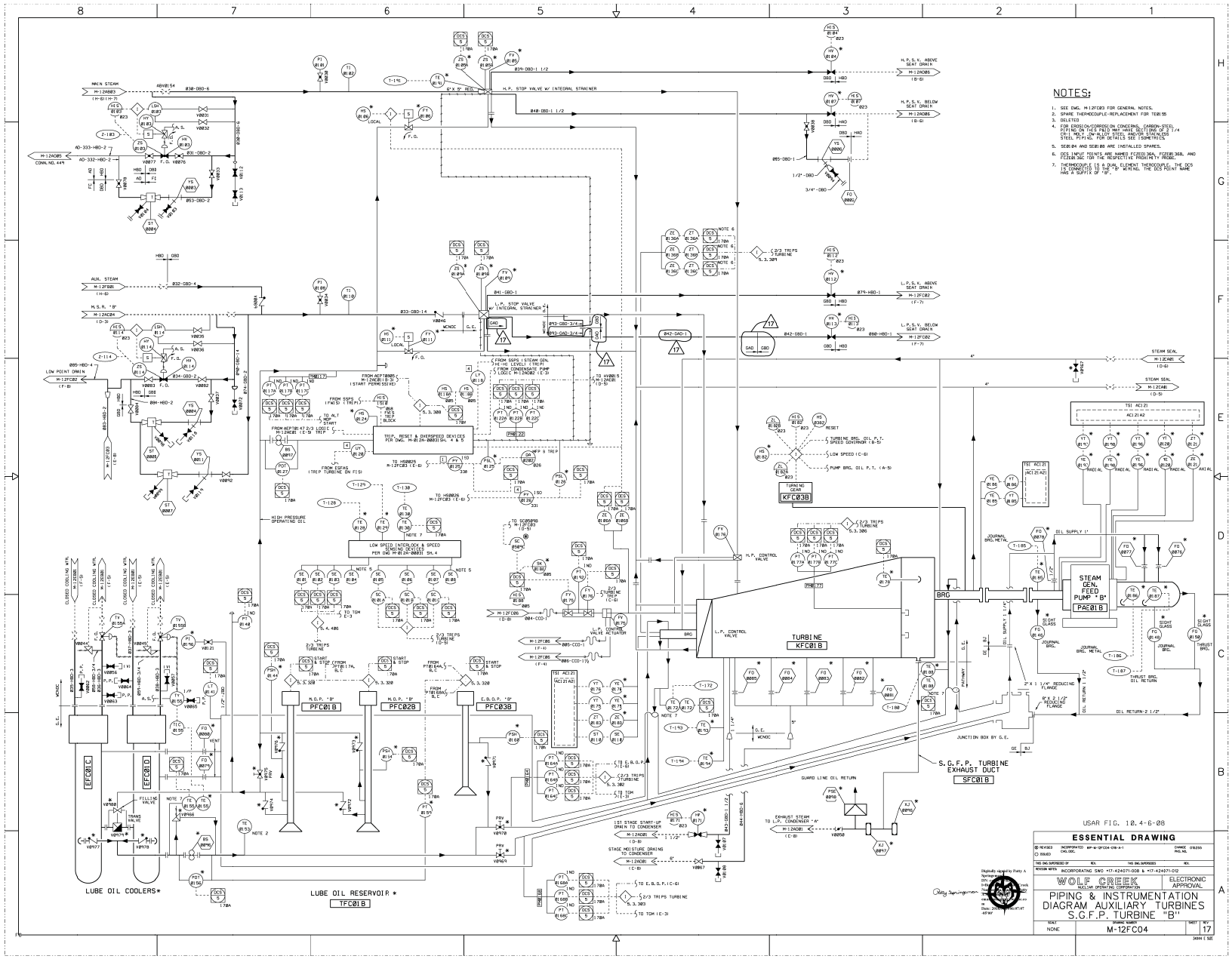
NOTES:
1. SEE DWG. M-12FC03 FOR GENERAL NOTES.
2. SPARE THERMOCOUPLE-REPLACEMENT FOR TE81B5
3. DELETED
4. FOR EROSION/CORROSION CONCERNS, CARBON-STEEL PIPING ON THIS P&ID MAY HAVE SECTIONS OF 3 1/4 CR-1 MO-1 LOW-ALLOY STEEL AND/OR STAINLESS STEEL PIPING. FOR DETAILS SEE ISOMETRICS.
5. SE81B4 AND SE81B5 ARE INSTALLED SPARES.
6. DCS INPUT POINTS ARE NAMED FCF81D6A, FCF81D6B, AND FE81B7AC FOR THE RESPECTIVE PROXIMITY PROBES.
7. THERMOCOUPLE IS A DUAL ELEMENT THERMOCOUPLE. THE DCS IS CONNECTED TO THE "B" WIRING. THE DCS POINT NAME HAS A SUFFIX OF "B".
MAIN STEAM
AUX. STEAM
H.S.R. "B"
LOW POINT DRAIN
H.P. STOP VALVE W/ INTEGRAL STRAINER
L.P. STOP VALVE W/ INTEGRAL STRAINER
H.P. CONTROL VALVE
L.P. CONTROL VALVE
L.P. CONTROL VALVE ACTUATOR
TURBINE
KFC01B
TURNING GEAR
KFC03B
STEAM GEN. FEED PUMP "B"
PAE01B
M.O.P. "B"
PFC01B
PFC02B
E.S.O.P. "B"
PFC03B
EFC01C
EFC01D
LUBE OIL COOLERS*
LUBE OIL RESERVOIR *
TFC01B
S.G.F.P. TURBINE EXHAUST DUCT
SFC01B
JUNCTION BOX BY G.E.
GUARD LINE OIL RETURN
TRIP, RESET & OVERSPEED DEVICES PER DWG. M-81ZA-00031 SH. 4 & 5
LOW SPEED INTERLOCK & SPEED SENSOR DEVICES PER DWG M-81ZA-00031 SH. 4
HIGH PRESSURE OPERATING OIL
USAR FIG. 10.4-6-08
ESSENTIAL DRAWING
WOLF CREEK NUCLEAR OPERATING CORPORATION
ELECTRONIC APPROVAL
PIPING & INSTRUMENTATION DIAGRAM AUXILIARY TURBINES S.G.F.P. TURBINE "B"
SCALE NONE
DRAWING NUMBER M-12FC04
SHEET 17
REV A

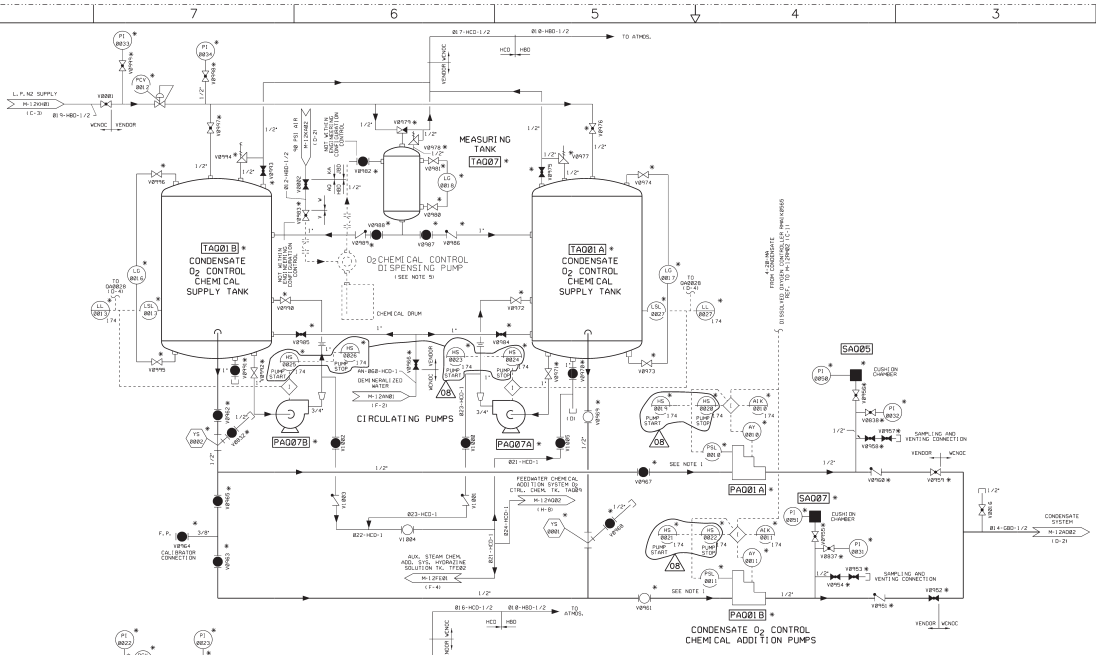

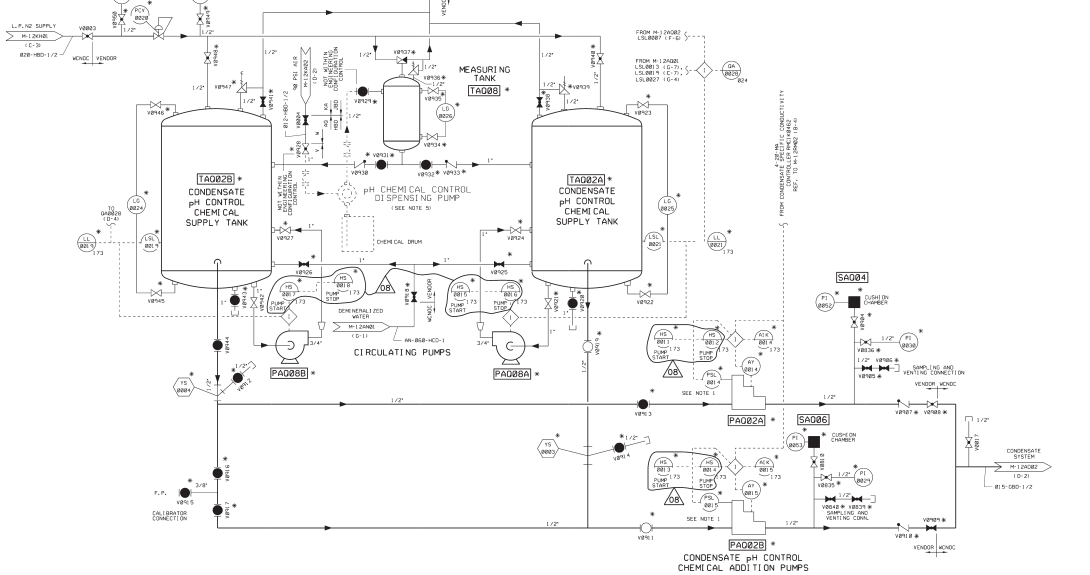

NOTES

1. LOW PRESSURE SWITCHES ON ADDITION PUMPS INDICATE DIAPHRAGH FAILURE.
2. ALL VENDOR SUPPLIED PIPING IS 304 S.S. SCH. 40.
3. ALL VENDOR PIPE FITTINGS ARE SOCKET WELD, 316 OR 304 S.S., 3000 LBS., DESIGNED AND TESTED TO ASTM B16.11 AND THEY COMPLY TO ANSI B31.1 POWER PIPING CODE.
4. DELETED
5. DISPENSING PUMP SHOULD BE AIR OPERATED OR EXPLOSION PROOF.

USAR FIG. 10.4-7 -01

ESSENTIAL DRAWING

⊗ REVISED / ○ ISSUED	INCORPORATED CR 23451 / CHG. ORD.	CHANGE REQ. NO.
THIS CHG. SUPERSEDES DT:	REV.	THIS CHG. SUPERSEDES:	REV.
REVISION NOTES:		

WOLF CREEK NUCLEAR OPERATING CORPORATION — ELECTRONIC APPROVAL

PIPING & INSTRUMENTATION DIAGRAM CONDENSATE CHEMICAL ADDITION SYSTEM

SCALE	DRAWING NUMBER	SHEET	REV
NONE	M-12AQ01	08	

M-12AQ01-08 — 2014 1 32

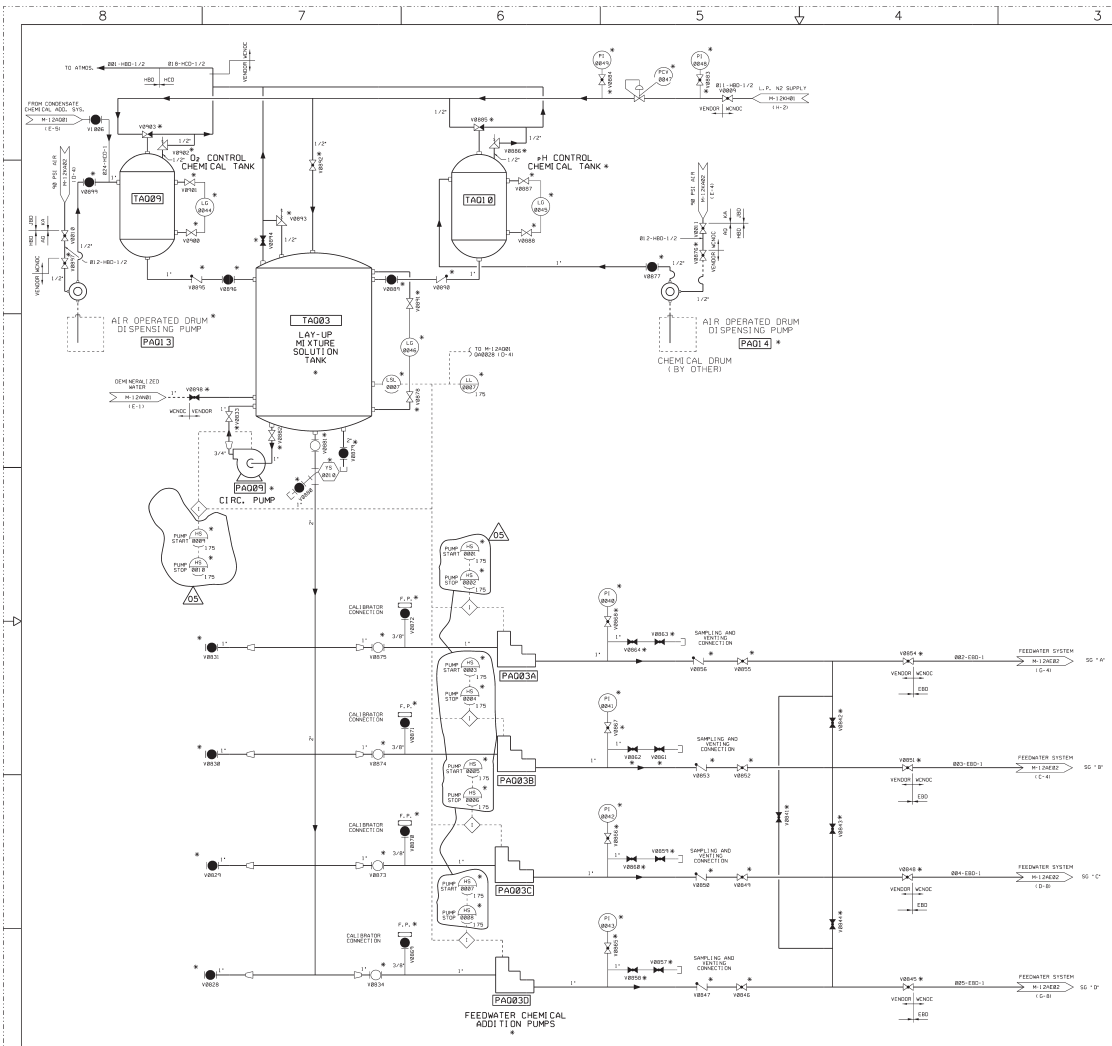

NOTES

1. ALL VENDOR SUPPLIED PIPE 316 OR 304 S.S. SCH 40.
2. ALL VENDOR PIPE FITTINGS ARE SOCKET WELD 316 OR 304 S.S. 3000 LBS. DESIGNED AND TESTED PER ANSI B16.11 AND FULLY CONFORM TO ANSI B31.1 POWER PIPING CODE.

USAR FIG. 10.4-7 -02

ESSENTIAL DRAWING

REVISED	INCORPORATED DIS. DOC.
ISSUED	CHANGE PKG. NO.
THIS DWG. SUPERSEDES DF	REV.
THIS DWG. SUPERSEDED	REV.
REVISION NOTES	

WOLF CREEK NUCLEAR OPERATING CORPORATION

ELECTRONIC APPROVAL

PIPING AND INSTRUMENTATION DIAGRAM
FEEDWATER CHEMICAL
ADDITION SYSTEM

SCALE	DRAWING NUMBER	SHEET	REV
NONE	M-12AQ02		05

M-12AQ02-1-05

FORM C SIZE

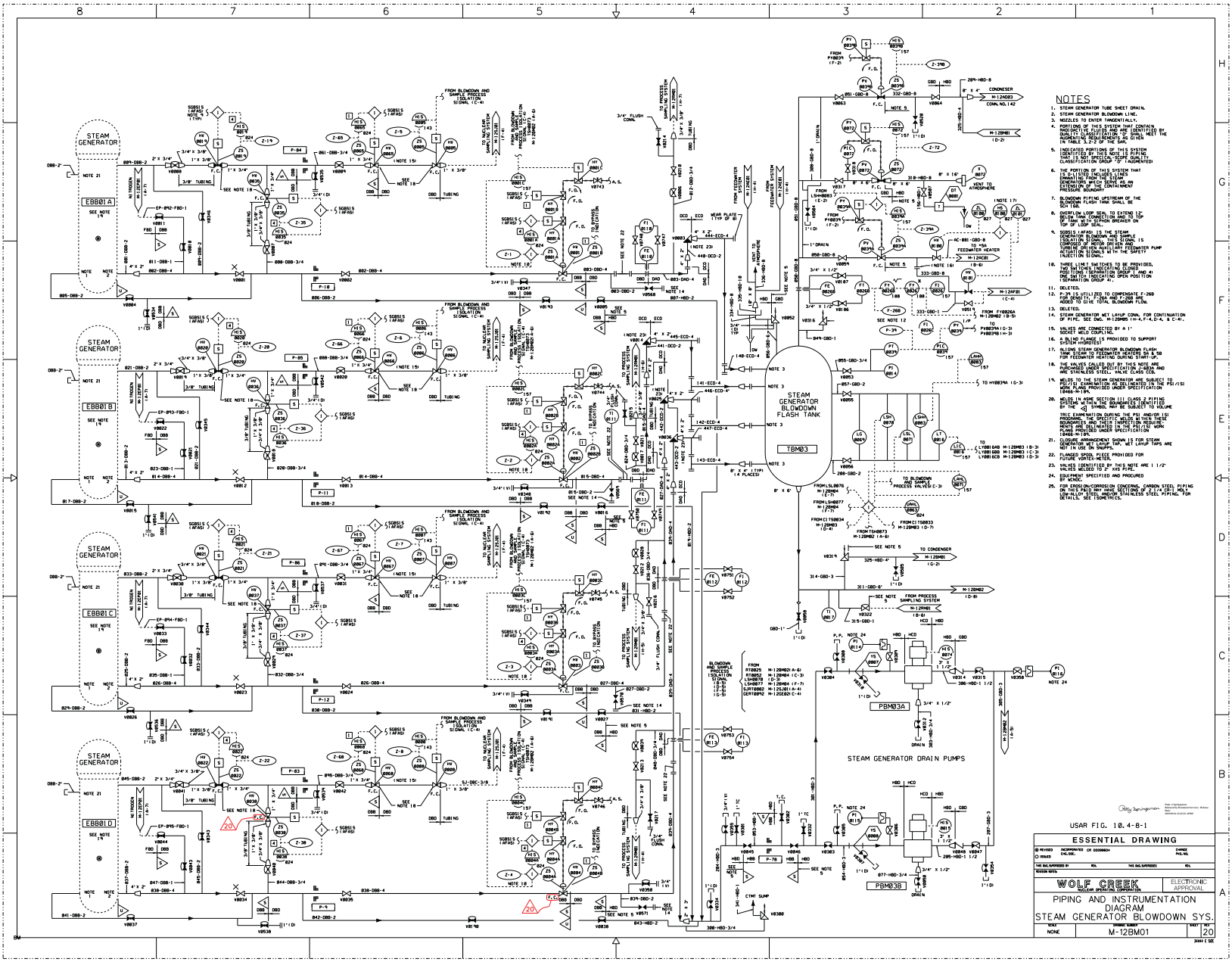

NOTES

1. STEAM GENERATOR TUBE SHEET DRAIN.
2. STEAM GENERATOR BLOWDOWN LINE.
3. NOZZLES TO ENTER TANGENTIALLY.
4. PORTIONS OF THIS SYSTEM THAT CONTAIN RADIOACTIVE FLUIDS AND ARE IDENTIFIED BY QUALITY CLASSIFICATION "Q" WILL MEET THE AUGMENTED REQUIREMENTS AS GIVEN IN TABLE 3.2-2 OF THE SAR.
5. INDICATED PORTIONS OF THIS SYSTEM THAT CONTAIN RADIOACTIVE FLUIDS AND ARE IDENTIFIED BY QUALITY CLASSIFICATION "Q" ARE CLASSIFICATION GROUP "D" TAUGHENTED.
6. THE PORTION OF THIS SYSTEM THAT CONTAINS RADIOACTIVE FLUIDS IMMEDIATELY FROM THE STEAM GENERATORS UPTO SERVE AS AN ISOLATION BOUNDARY CONTAINMENT PENETRATION BOUNDARY.
7. BLOWDOWN PIPING UPSTREAM OF THE BLOWDOWN FLASH TANK SHALL BE SCH 160.
8. OVERFLOW LOOP SEAL TO EXTEND TO 6" ABOVE THE BOTTOM OF THE TANK. TOP OF TANK WILL SUPPORT SHROUDS ON TOP OF LOOP SEAL.
9. SGBSLS (AFAS) IS THE STEAM GENERATOR BLOWDOWN AND SAMPLE ISOLATION SIGNAL. THIS SIGNAL IS ACTUATED BY SGBSLS (AFAS) AND TURNED ON BY NUCLEAR FEEDWATER PUMP ACTUATION SIGNALS WITH THE SAFETY INJECTION SIGNAL.
10. THREE LINE SWITCHES TO BE PROVIDED. TWO SWITCHES INDICATING CLOSED POSITIONS SEPARATION GROUP I AND 41 ONE SWITCH INDICATING OPEN POSITION SEPARATION GROUP 41.
11. DELETED.
12. F-28 IS UTILIZED TO CONDENSATE F-26B FOR DENOTING 2-28A AND F-26B AND ADDED TO GIVE TOTAL BLOWDOWN FLOW.
13. DELETED.
14. STEAM GENERATOR WET LAYUP CONN. FOR CONTINUATION OF PIPE. SEE DWG. M-12BM05 (H-4, F-4, D-4, & C-4).
15. VALVES ARE CONNECTED BY A 1" SOCKET WELD COUPLING.
16. A BRACE WITH SNUBBERS PROVIDED TO SUPPORT SYSTEM VIBRATIONS.
17. ALLOWS STEAM GENERATOR BLOWDOWN FLASH TANK STEAM TO FEEDWATER HEATERS SA & SB FOR FEEDWATER HEATING DURING START UP.
18. THE VALVES CALLED OUT BY THIS NOTE ARE PURCHASED UNDER SPECIFICATION 2-8836 AND ARE STAINLESS STEEL. VALVE CLASS CCB.
19. WELDS IN THE STEAM GENERATOR ARE SUBJECT TO PSI/ISI EXAMINATION AS DELINEATED IN THE PSI/ISI WORK PLAN PROVIDED UNDER SPECIFICATION 2-8836-NPS.
20. WELDS IN LINE SECTION III CLASS 2 PIPING SYSTEM WITH BOUNDARY ISOLATION VALVES BY THE ◁ SYMBOL MAY BE SUBJECT TO VOLUME TREE EXAMINATION DURING THE PSI AND/OR ISI EXAMINATIONS. THE VALVES ARE THE ISOLATION BOUNDARIES AND THEIR INSPECTION REQUIREMENTS ARE DELINEATED IN THE PSI/ISI WORK PLAN PROVIDED UNDER SPECIFICATION 2-8836-NPS.
21. CLOSURE ARRANGEMENT SHOWN IS FOR STEAM GENERATOR WET LAYUP. TAPS WET LAYUP TAPS ARE NOT IN USE ON SNUPPS.
22. FLANGED SPOOL PIECE PROVIDED FOR FUTURE VORTEX METER.
23. VALVE IDENTIFIED BY THIS NOTE ARE 1 1/2" VALVES WELDED TO 2" XHS PIPE.
24. EQUIPMENT SPECIFIED AND PROCURED BY VENDOR.
25. FOR EROSION/CORROSION CONCERNS, CARBON STEEL PIPING ON THIS PAGE MAY HAVE SECTIONS OF 3/4 (3-1/4 MIL) LOW-ALLOY STEEL AND/OR STAINLESS STEEL PIPING. FOR DETAILS, SEE ISOMETRICS.

USAR FIG. 10.4-8-1

ESSENTIAL DRAWING

REVISED	INCORPORATED CR 00009604	CHANGE PKG. NO.
ISSUED	CHLOE	
THIS DWG. SUPERSEDES	NON.	THIS DWG. SUPERSEDES	NON.
REVISION NOTES		

WOLF CREEK GENERATING STATION

ELECTRONIC APPROVAL

PIPING AND INSTRUMENTATION DIAGRAM
STEAM GENERATOR BLOWDOWN SYS.

SCALE	DRAWING NUMBER	SHEET	REV
NONE	M-12BM01		20

3AAH C 12E

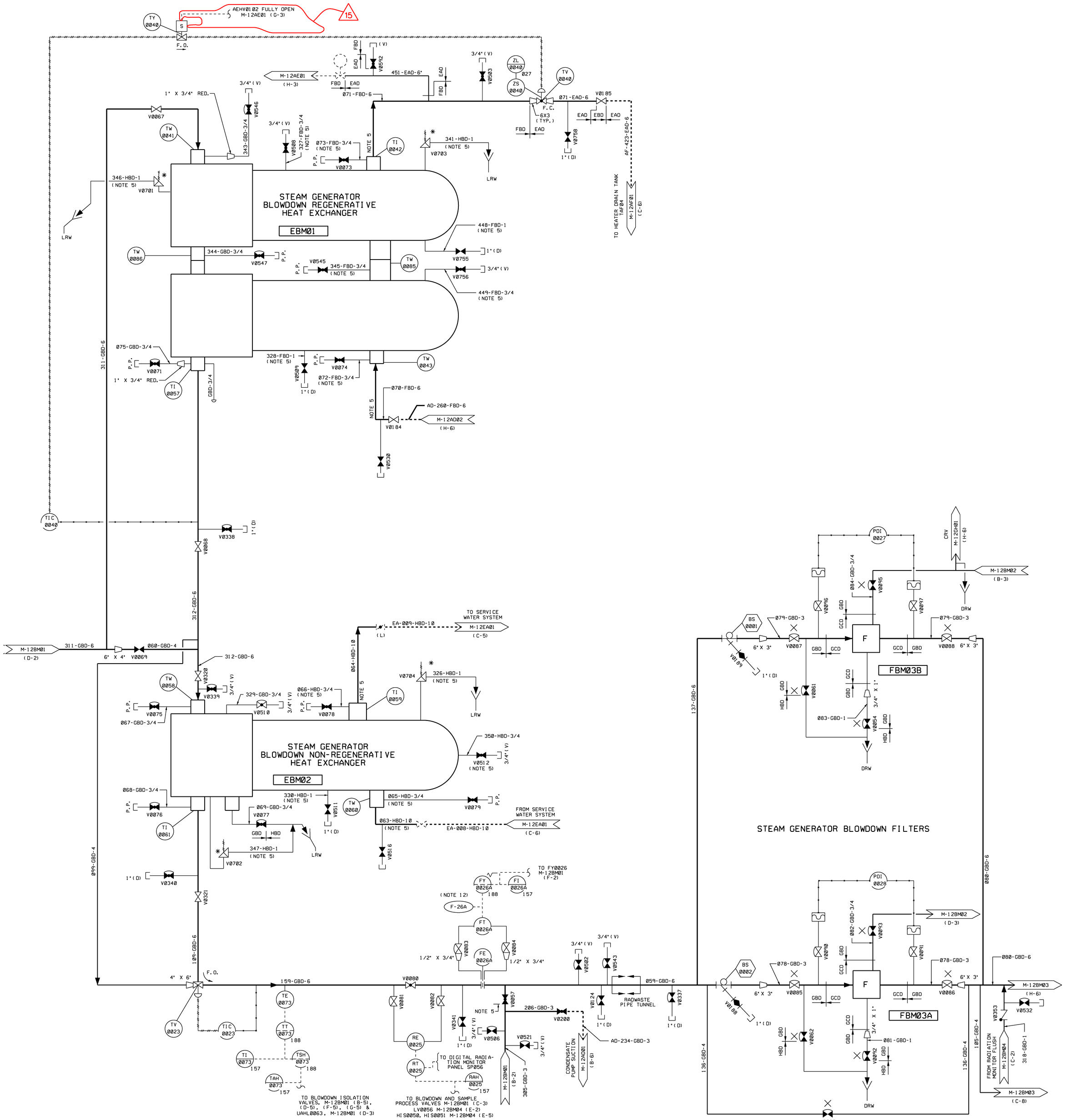

NOTES

1. FOR GENERAL NOTES SEE DRAWING M-12BM01.
2. DELETE
3. FOR EROSION/CORROSION CONCERNS, CARBON STEEL PIPING ON THIS P&ID MAY HAVE SECTIONS OF 2 1/4 CR-1 MOLY LOW-ALLOY STEEL AND/OR STAINLESS STEEL PIPING. FOR DETAILS, SEE ISOMETRICS.

USAR FIG. 10.4-8-2

ESSENTIAL DRAWING

REVISED / ISSUED — INCORPORATED CHG. DOC. CR 00139708 — CHANGE PKG. NO.

THIS DWG. SUPERSEDED BY — REV. — THIS DWG. SUPERSEDES — REV.

REVISION NOTES:

WOLF CREEK NUCLEAR OPERATING CORPORATION — ELECTRONIC APPROVAL

PIPING AND INSTRUMENTATION DIAGRAM
STEAM GENERATOR BLOWDOWN SYSTEM

SCALE	DRAWING NUMBER	SHEET	REV
NONE	M-12BM02		15

Linda K Kamionski
Released by Document Services. Release Date: 2020.07.27 12:19:07 -05'00'

34X44 E SIZE

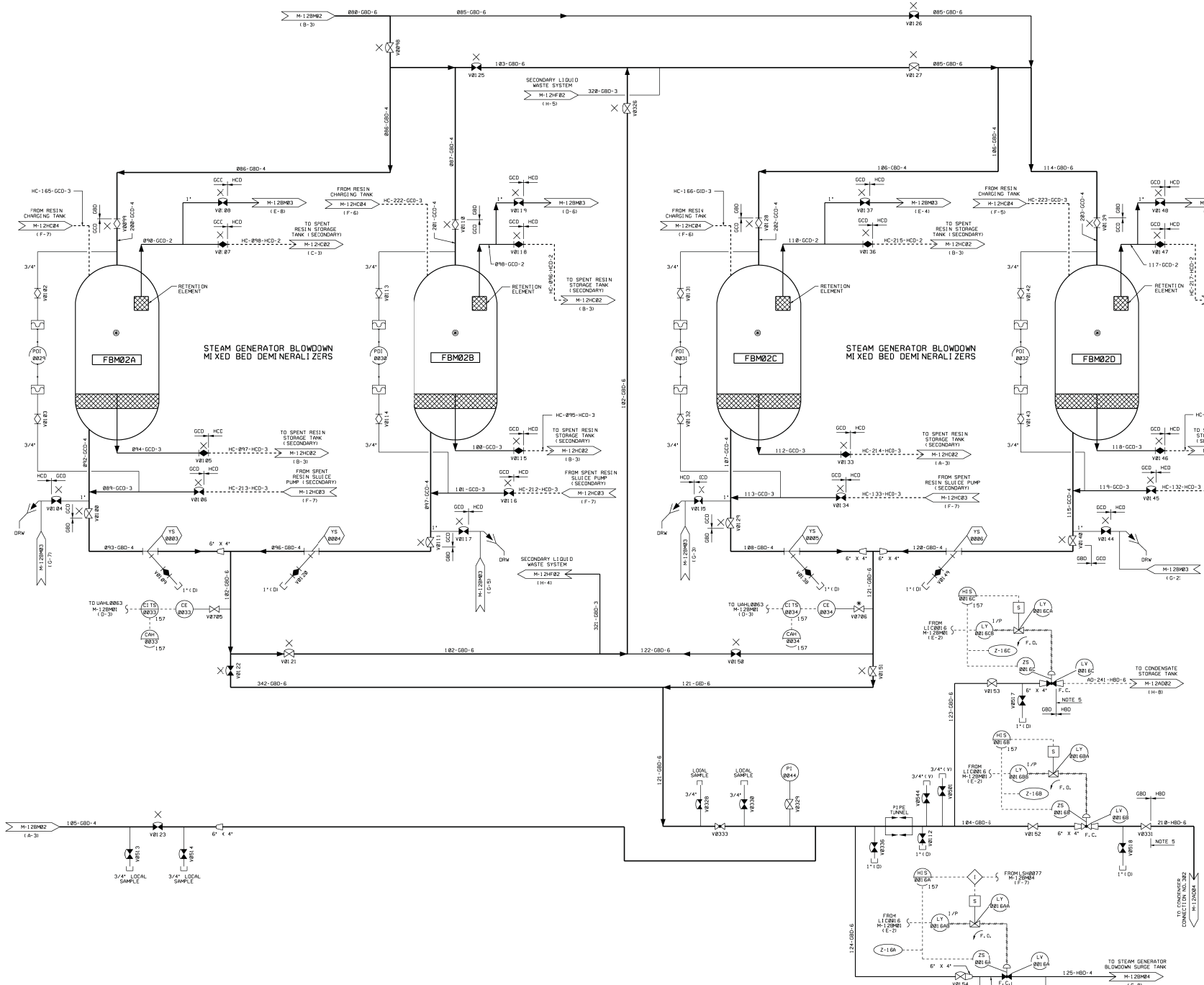

NOTES

1. FOR GENERAL NOTES SEE DRAWING M-12BM01.
2. FOR EROSION/CORROSION CONCERNS, CARBON STEEL PIPING ON THIS P & ID MAY HAVE SECTIONS OF 2 1/4 CR-1 MOLY LOW-ALLOY STEEL AND/OR STAINLESS STEEL PIPING. FOR DETAILS, SEE ISOMETRICS.

05 JSAR FIG. 10.4-8-03

ESSENTIAL DRAWING

⊗ REVISED	INCORPORATED CHG. DOC.	CR #00130206	CHANGE PKG. NO.
○ ISSUED			
THIS DWG. SUPERSEDES BY	REV.	THIS DWG. SUPERSEDES	REV.

REVISION NOTES: REVISED TO ADD USAR FIGURE NO.:

WOLF CREEK NUCLEAR OPERATING CORPORATION — ELECTRONIC APPROVAL

PIPING AND INSTRUMENTATION DIAGRAM STEAM GENERATOR BLOWDOWN SYSTEM

SCALE	DRAWING NUMBER	SHEET	REV
NONE	M-12BM03		05

Lisa M Kuenzel
Released for Construction Services Release Date: 2019-02-27 06:28:23 AM MST

34X44 E 9/20

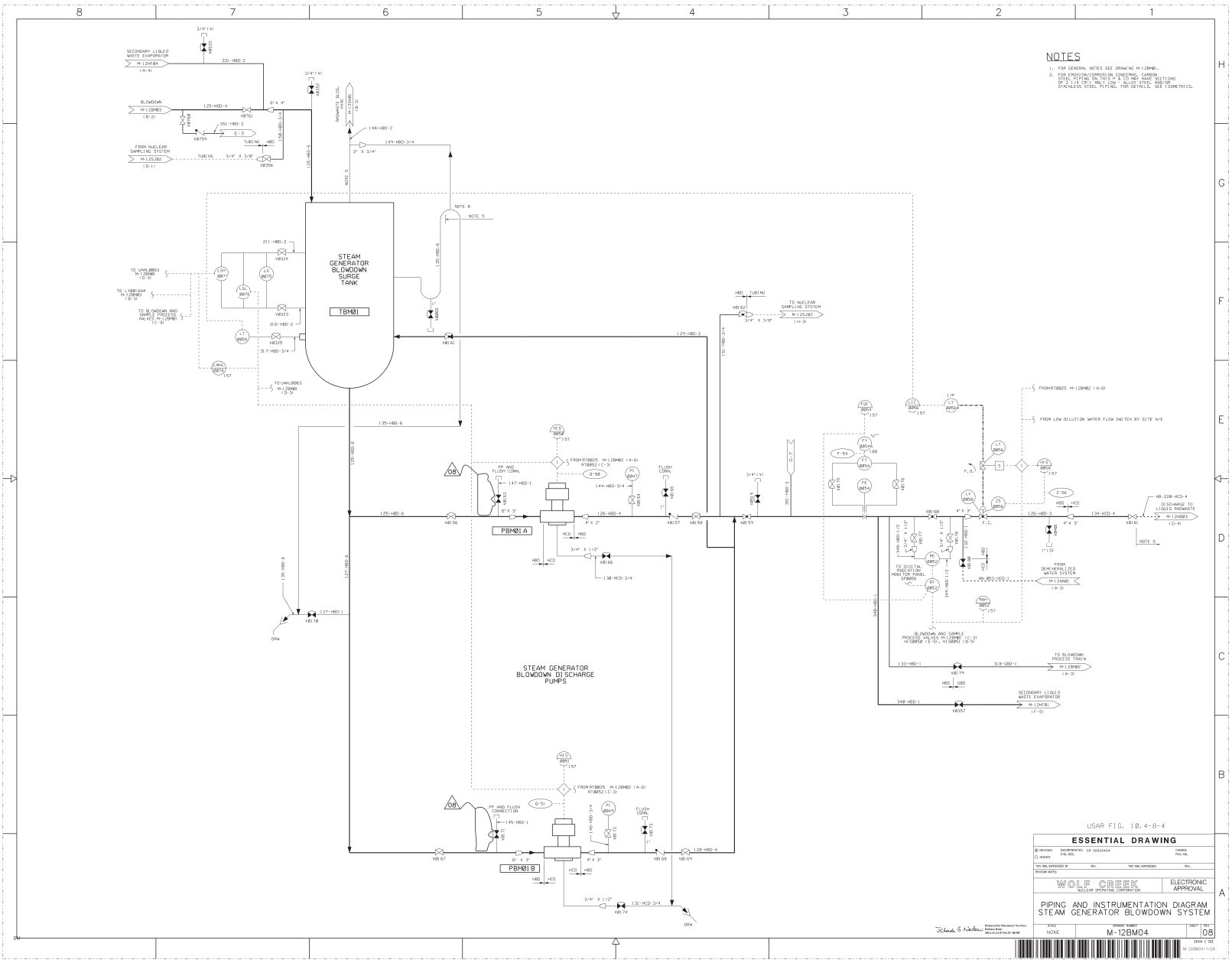
NOTES
1. FOR GENERAL NOTES SEE DRAWING M-12BM01.
2. FOR EROSION/CORROSION CONCERNS, CARBON STEEL PIPING ON THIS P & ID MAY HAVE SECTIONS OF 2 1/4 CR-1 MOLY LOW - ALLOY STEEL AND/OR STAINLESS STEEL PIPING. FOR DETAILS, SEE ISOMETRICS.
STEAM GENERATOR BLOWDOWN SURGE TANK
TBM01
PBM01A
PBM01B
STEAM GENERATOR BLOWDOWN DISCHARGE PUMPS
SECONDARY LIQUID WASTE EVAPORATOR
BLOWDOWN
FROM NUCLEAR SAMPLING SYSTEM
TO NUCLEAR SAMPLING SYSTEM
FROM LOW DILUTION WATER FLOW SWITCH BY SITE A/E
DISCHARGE TO LIQUID RADWASTE
FROM DEMINERALIZED WATER SYSTEM
TO DIGITAL RADIATION MONITOR PANEL
BLOWDOWN AND SAMPLE PROCESS VALVES
TO BLOWDOWN PROCESS TRAIN
SECONDARY LIQUID WASTE EVAPORATOR
PP AND FLUSH CONN.
FLUSH CONN.
USAR FIG. 10.4-8-4
ESSENTIAL DRAWING
WOLF CREEK NUCLEAR OPERATING CORPORATION
ELECTRONIC APPROVAL
PIPING AND INSTRUMENTATION DIAGRAM
STEAM GENERATOR BLOWDOWN SYSTEM
SCALE NONE
DRAWING NUMBER M-12BM04
SHEET 08
M-12BM04-1-08

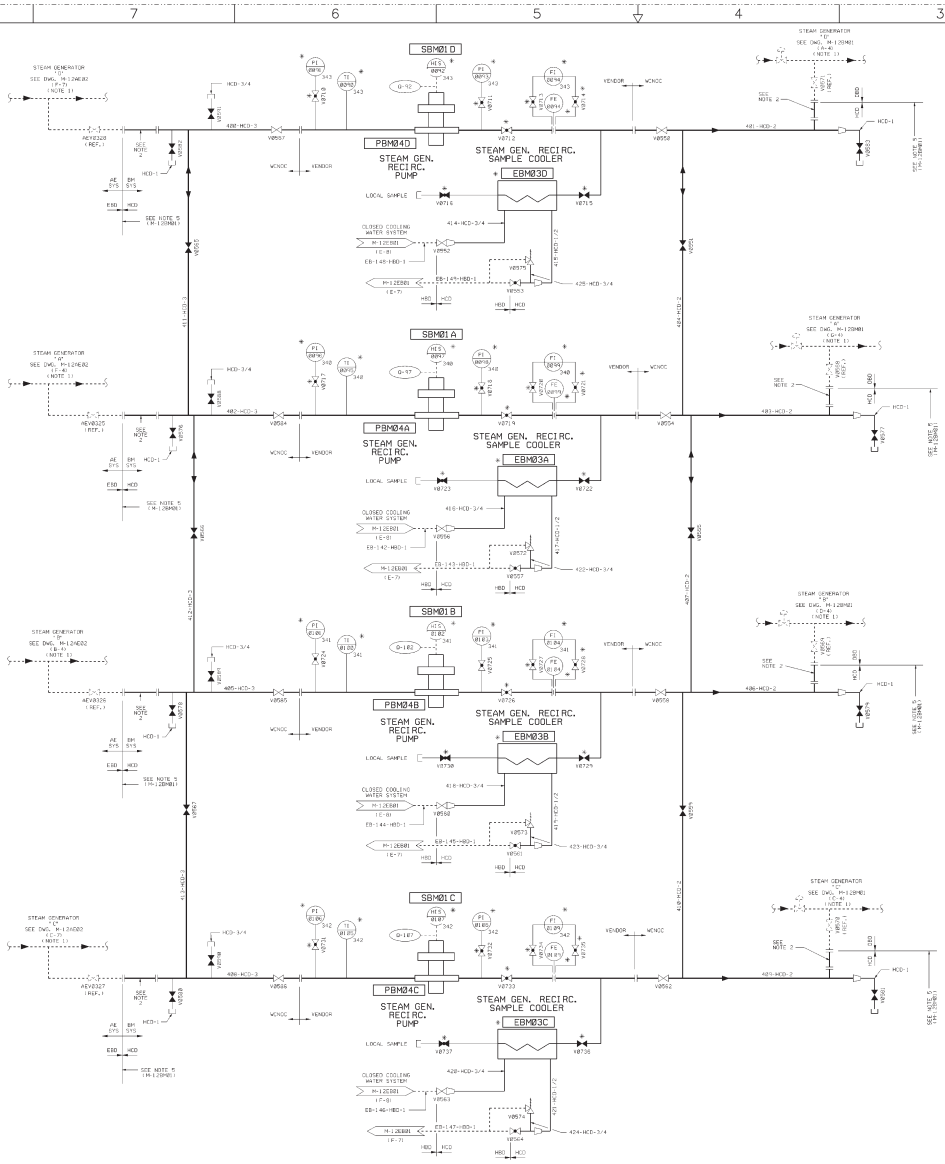

NOTES

1. SYSTEM INTERFACE ARROWS SHOW NORMAL FLOW DIRECTION. WET LAYUP RECIRCULATION FLOW IS IN THE OPPOSITE DIRECTION.
2. REMOVABLE SPOOL TO BE IN PLACE ONLY DURING STEAM GENERATOR WET LAYUP RECIRCULATION MODE. REMOVABLE SPOOL TO BE REPLACED WITH BLIND FLANGES DURING NORMAL OPERATIONS.
3. FOR EROSION/CORROSION CONCERNS, CARBON STEEL PIPING ON THIS PIPE WHICH HAS SUCTION OF 3 1/4 CENTS OR LOW-ALLOY STEEL AND/OR STAINLESS STEEL PIPING. FOR DETAILS, SEE ISOMETRICS.

USAR FIG. 10.4-8-5

ESSENTIAL DRAWING

REVISED INCORPORATES CHG. NO.	CHANGE PKG. NO.	
ISSUED		
THIS DWG. SUPERSEDES BY	REV.	THIS DWG. SUPERSEDES REV.
REVISION NOTES: REVISED LINE STYLES PER PIR 2006-0042		

WOLF CREEK NUCLEAR OPERATING CORPORATION

ELECTRONIC APPROVAL

PIPING & INSTRUMENTATION DIAGRAM STEAM GENERATOR BLOWDOWN SYSTEM

SCALE	DRAWING NUMBER	SHEET	REV
NONE	M-12BM05	05	A

DWFR E 30E

Released by Document Services - Release Date: 03/09/06

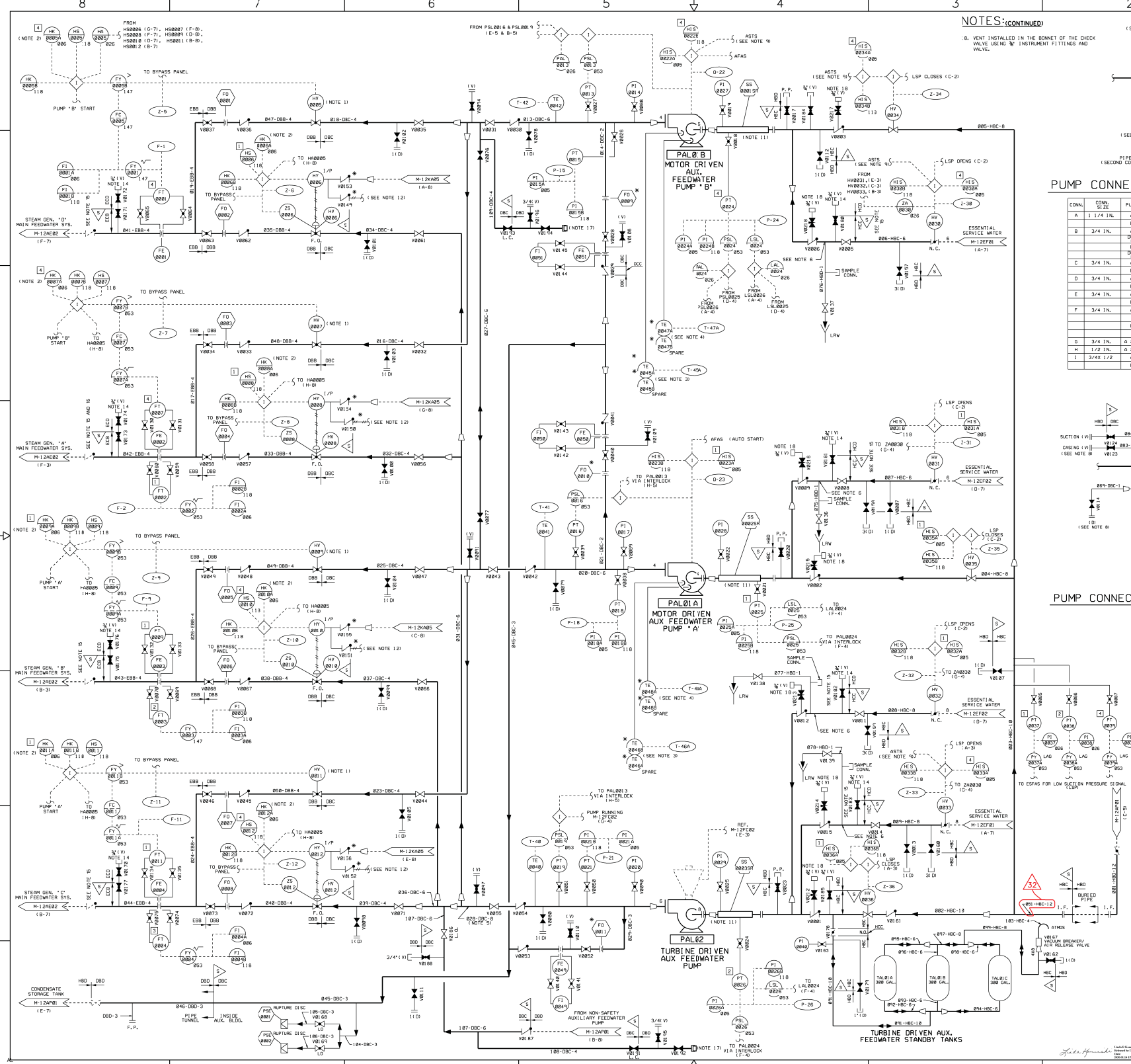

NOTES:(CONTINUED)

8. VENT INSTALLED IN THE BONNET OF THE CHECK VALVE USING ¾" INSTRUMENT FITTINGS AND VALVE.

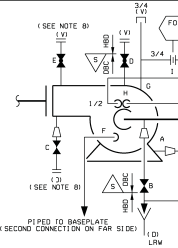

PUMP CONNECTION DETAIL-MOTOR DRIVEN PUMP

CONN.	CONN. SIZE	PUMP	VALVE*	LINE NUMBER	ORIFICE*	PURPOSE
A	1 1/4 IN.	A	-	052-HBD-1	-	BASEPLATE DRAIN
		B	-	053-HBD-1	-	BASEPLATE DRAIN
B	3/4 IN.	A	V0115	054-DBC-1	-	DRAIN-SUCTION NOZZLE
		DOWNSTREAM OF VALVE		055-HBD-1	-	DRAIN-SUCTION NOZZLE
		B	V0116	056-DBC-1	-	DRAIN-SUCTION NOZZLE
		DOWNSTREAM OF VALVE		057-HBD-1	-	DRAIN-SUCTION NOZZLE
C	3/4 IN.	A	V0117	058-DBC-1	-	DRAIN-DISCHARGE NOZZLE
		B	V0118	059-DBC-1	-	DRAIN-DISCHARGE NOZZLE
D	3/4 IN.	A	V0119	079-DBC-3/4	-	SUCTION VENT
		B	V0120	080-DBC-3/4	-	SUCTION VENT
E	3/4 IN.	A	V0121	081-DBC-3/4	-	CASING VENT
		B	V0122	082-DBC-3/4	-	CASING VENT
F	3/4 IN.	A	-	060-HBD-3/4	-	DRAIN-BEARING BRACKET
			-	061-HBD-3/4	-	DRAIN-BEARING BRACKET
		B	-	062-HBD-3/4	-	DRAIN-BEARING BRACKET
			-	063-HBD-3/4	-	DRAIN-BEARING BRACKET
G	3/4 IN.	A & B	-	-	-	1ST STG. BLEEDOFF
H	1/2 IN.	A & B	-	-	-	STUFFING BOX INLET (2)
I	3/4X 1/2	A	-	-	F00012	STUFFING BOX SEAL WTR.
		B	-	-	F00013	STUFFING BOX SEAL WTR.

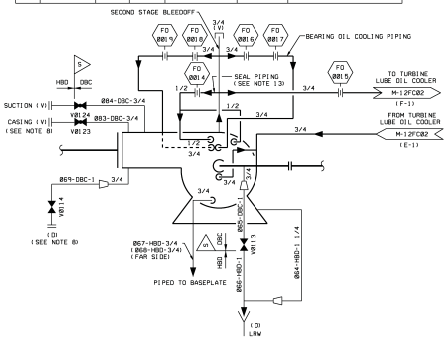

PUMP CONNECTION DETAIL TURBINE DRIVEN PUMP

(SEE NOTE 18)

NOTES:

1. ALHV2005, ALHV2007, AL-V0004, AND ALHV2011 ARE POSITIONABLE.
2. MANUAL CONTROL STATIONS WILL HAVE INTEGRAL POSITION LIGHTS AND REMOTE CONTROL LIGHT.
3. INBOARD MOTOR BEARING TEMPERATURE. (COPPER-CONSTANTAN THERMOCOUPLE)
4. OUTBOARD MOTOR BEARING TEMPERATURE (COPPER-CONSTANTAN THERMOCOUPLE).
5. FOR LINE NO. 028-DBC-8, PIPING WILL BE NORMALIZED AFTER FABRICATION.
6. DRILLED 3/16 DIAMETER RESTRICTION TO MINIMIZE FLOW DURING FSW SYSTEM OPERATION(DUTY AT WHICH QUALITY GROUP & SEISMIC CLASSIFICATION IS CHANGED FROM "C" & SEISMIC TO "D" & NON-SEISMIC.
7. DELETED.
8. THE FOLLOWING CODE/NON CODE BOUNDARIES APPLY TO ALL CARBON STEEL VENTS, DRAINS AND FLOW TAPS ON THE DISCHARGE PIPING OF PUMPS PAL01A, PAL01B AND PAL02.

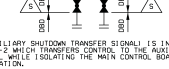

9. ASTS (AUXILIARY SHUTDOWN TRANSFER SIGNAL) IS INITIATED AT RPI18B BY RP-HIS-2 WHICH TRANSFERS CONTROL TO THE AUXILIARY SHUTDOWN PANEL WHILE ISOLATING THE MAIN CONTROL BOARD CONTROLS AND INDICATION.
10. THE TURBINE DRIVEN AUXILIARY FEEDWATER PUMP IS SUPPLIED ASME SECTION III, CLASS 3. THE COOLING WATER PIPING ASSOCIATED WITH THE LUBE OIL COOLER IS ALSO SUPPLIED ASME SECTION III CLASS 3.
11. REMOVABLE SPOOL WITH SPACER RING INSTALLED (REPLACEMENT FOR START-UP STRAINER).
12. SEE J-14KA01 FOR VALVES ON FIELD ROUTED INSTRUMENT LINES.
13. FOR SEAL WATER PIPING SEE M-021-00003 (MOTOR DRIVEN PUMP) & M-021-00121 (TURBINE DRIVEN PUMP).
14. TEST CONNECTION AND/OR VENT INSTALLED WITH CAM AND GROOVE ADAPTER AND DUST CAP WITH BUNA-N GASKET.
15. PER GENERAL NOTE 4.6.2 OF MS-02 WHICH STATES "FOR REASONS OF ECONOMY AND INTERCHANGEABILITY, THE USE OF VALVES IS MANUFACTURED AT A HIGHER QUALITY GROUP AND PRESSURE RATING THEN SPECIFIED VALVE CLASS IN THE PIPING CLASS SHEET IS AN ACCEPTABLE ALTERNATE. VENT VALVE ASSEMBLIES SHALL BE FABRICATED WITH STAINLESS STEEL PIPING AND VALVES.
16. PER GENERAL NOTE 4.8.2 OF MS-02 WHICH STATES "PIPING AND PIPE COMPONENTS WITH A SCHEDULE OR RATING HIGHER THAN THOSE INDICATED ON PIPING CLASS SHEETS MAY BE USED WHEN SO INDICATED, ON DESIGN DRAWINGS OR APPROVED VENDER DRAWINGS". VALVE ASSEMBLY SHALL BE FABRICATED WITH SCH. 160 PIPING.
17. THIS CONNECTION IS TO BE USED ONLY FOR BEYOND-DESIGN-BASIS (FLEX) EMERGENCY CORE COOLING.

JSAR FIG. 10.4-9-00

ESSENTIAL DRAWING

REVISED ○ ISSUED — INCORPORATED CHKL DOC. — CHANGE PKG. NO.

THIS DWG. SUPERSEDES REV. — THIS DWG. SUPERSEDES REV.

REVISION NOTES: ADMIN. CHANGE TO REPLACE LINE NUMBER THAT WAS MISTAKENLY REMOVED.

WOLF CREEK NUCLEAR OPERATING CORPORATION — ELECTRONIC APPROVAL

PIPING & INSTRUMENTATION DIAGRAM AUXILIARY FEEDWATER SYSTEM

SCALE	DRAWING NUMBER	SHEET	REV
NONE	M-12AL01	32	A

Linda K Kunowski
Released by Document Services, Release Date: 2024-02-28 15:46:42 AFDSF

34X44 (9/20)

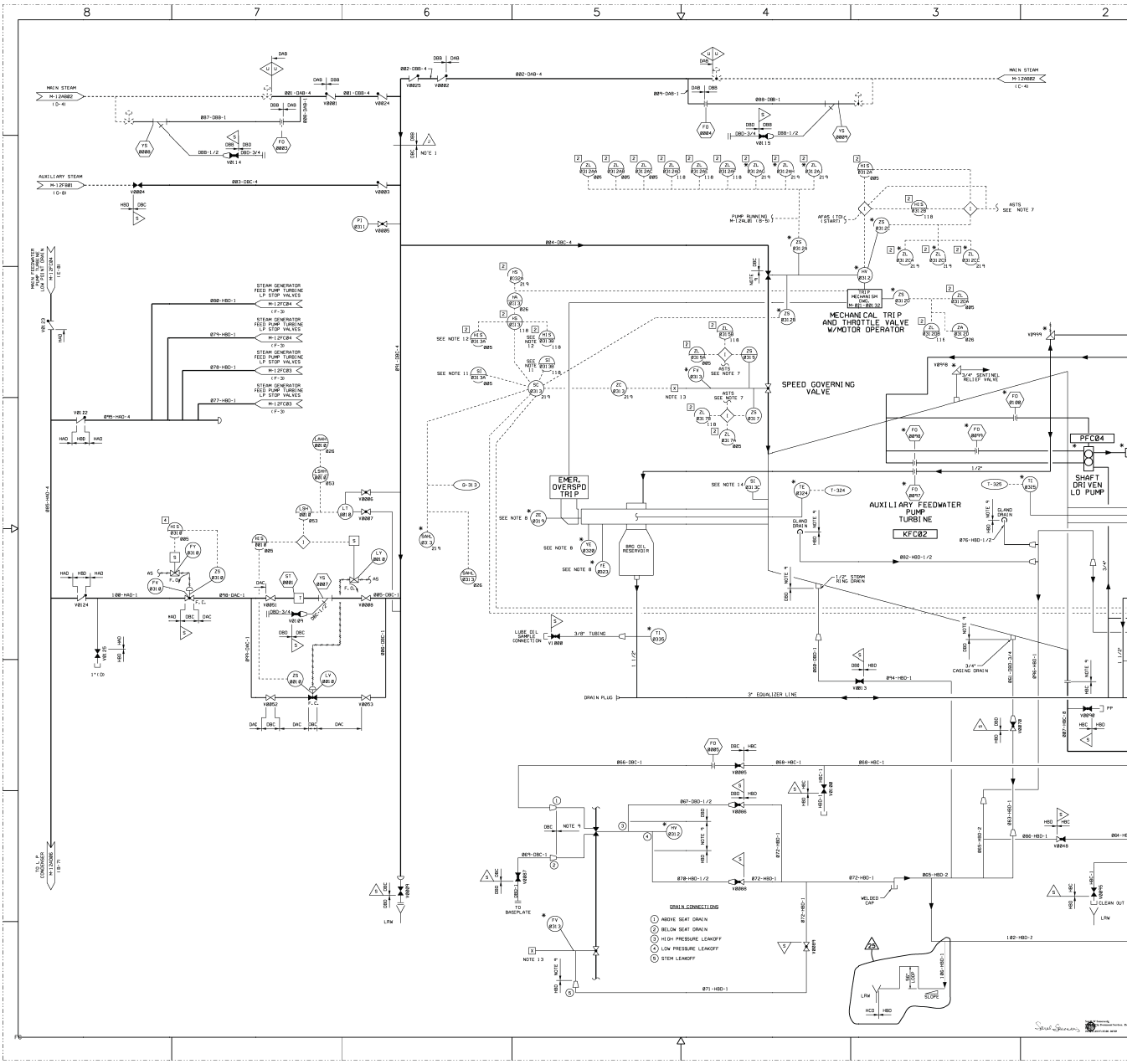

NOTES

1. DIMENSIONS CHANGE IS MADE AT FIRST WELD. DIMENSIONS OF ISOLATION RESTRAINT SYSTEM.
2. INSULATION DETECTOR VIEWS PLUME FROM ADJACENT PIPING.
3. WITHIN THIS ALARM SECTION (11) ALL ASME 2 PIPING SYSTEMS WHICH ARE SUBJECT TO VOLUMETRIC EXAMINATION DURING THE PSI AND/OR ISI PROGRAMS THE SPECIFIC ASME CODE SECTION XI EXAMINATION AREAS AND EXAMINATION REQUIREMENTS ARE DELINEATED IN THE PSI/ISI WORK PLANS PROVIDED UNDER SPECIFICATION 1.0468-M-19A.
4. SYMBOLS ARE PROVIDED FOR CLARITY TO INDICATE THAT ASME SECTION (11) CLASS 2 PIPING SYSTEMS WHICH ARE SUBJECT TO THE PSI/ISI PROGRAMS CONTINUE ON TO OTHER P&ID'S.
5. DELETED.
6. DELETED.
7. ASTS (AUXILIARY SHUTDOWN TRANSFER SIGNAL) IS INITIATED AT RP118 BY RP-HS-1 WHICH TRANSFERS CONTROL OF THE AUXILIARY SHUTDOWN PANEL BELLE PLACE TO THE MAIN CONTROL BOARD CONTROLS AND INDICATION.
8. IF SIMPATICO PROBE IS NOT USED, A STEEL/STAINLESS STEEL PLUG MAY BE SUBSTITUTED FOR THE PROBE.
9. THE AUXILIARY FEEDWATER PUMP TURBINE IS SUPPLIED WITH SHOP FABRICATED PIPING AND VALVES. THE PIPING AND VALVES ARE NOT QUALIFIED DUE TO ITS SAFETY RELATED FUNCTION. THE PIPING AND VALVES SUPPLIED BY THE VENDOR WITH THE TURBINE ARE ALSO NON-QUALIFIED. THE PIPING AND VALVES SUPPLIED BY WCNOC ARE SUPPLIED ASME SECTION III CLASS 3. THE NON-ASME PIPING WITHIN THE <> FLAGS IS SAFETY RELATED ANSI B31.1 PIPING.
10. FOR FROSI ON/CORROSION CONCERNS, CARBON STEEL PIPING ON THIS P&ID MAY HAVE SECTIONS OF 2 1/4 CR-1 MOLY, LOW - ALLOY STEEL AND/OR STAINLESS STEEL PIPING. FOR DETAILS, SEE ISOMETRICS.
11. CSI831A AND CSI831B ARE DUAL INDICATORS FOR TORQUE SPECIFICALLY AT MOV RU88 AND AUXILIARY SHUTDOWN PANEL RP118A, RESPECTIVELY. THE SIGNALS TO THESE INDICATORS ARE TAKEN FROM AUXILIARY OUTPUTS OF ZC831A, VIA ELECTRICAL ISOLATION AT THE TORQUE CONTROL PANEL.
12. MANUAL ADJUSTMENT OF AUX. FEEDWATER PUMP TURBINE SPEED POSSIBLE FROM SHIELD/CABINET MOUNTED SPEED CONTROLLER HS8031A OR HS8031AL AS SELECTED FROM SHIELD/CABINET MOUNTED CS HS8031.
13. ELECTROMECHANICAL LINEAR ACTUATOR.
14. SPEED INDICATOR SG831C IS A MECHANICAL DEVICE MOUNTED ON THE TURBINE SHIELD AND HAS NO PROCESS CONNECTIONS OR SAFETY RELATED FUNCTION BUT IS AVAILABLE FOR USE IF MANUAL OPERATION OF THE TURBINE VIA THE TRIP AND THROTTLE VALVE IS DESIRED.

USAR FIG. 10.4-10-00

ESSENTIAL DRAWING

REVISED	INCORPORATED DWG-NO	WP-M-12FC02-024-A-1
CHANGE	CC2434 PEL NO.	
ISSUED		
THIS DWG SUPERSEDED BY	REV.	THIS DWG SUPERSEDES	REV.
REVISION NOTES		

WOLF CREEK NUCLEAR OPERATING CORPORATION

ELECTRONIC APPROVAL

PIPING & INSTRUMENTATION DIAGRAM AUXILIARY TURBINES AUXILIARY FEEDWATER PUMP TURBINE

SCALE	DRAWING NUMBER	SHEET / REV
NONE	M-12FC02	25

34X44 C SIZE

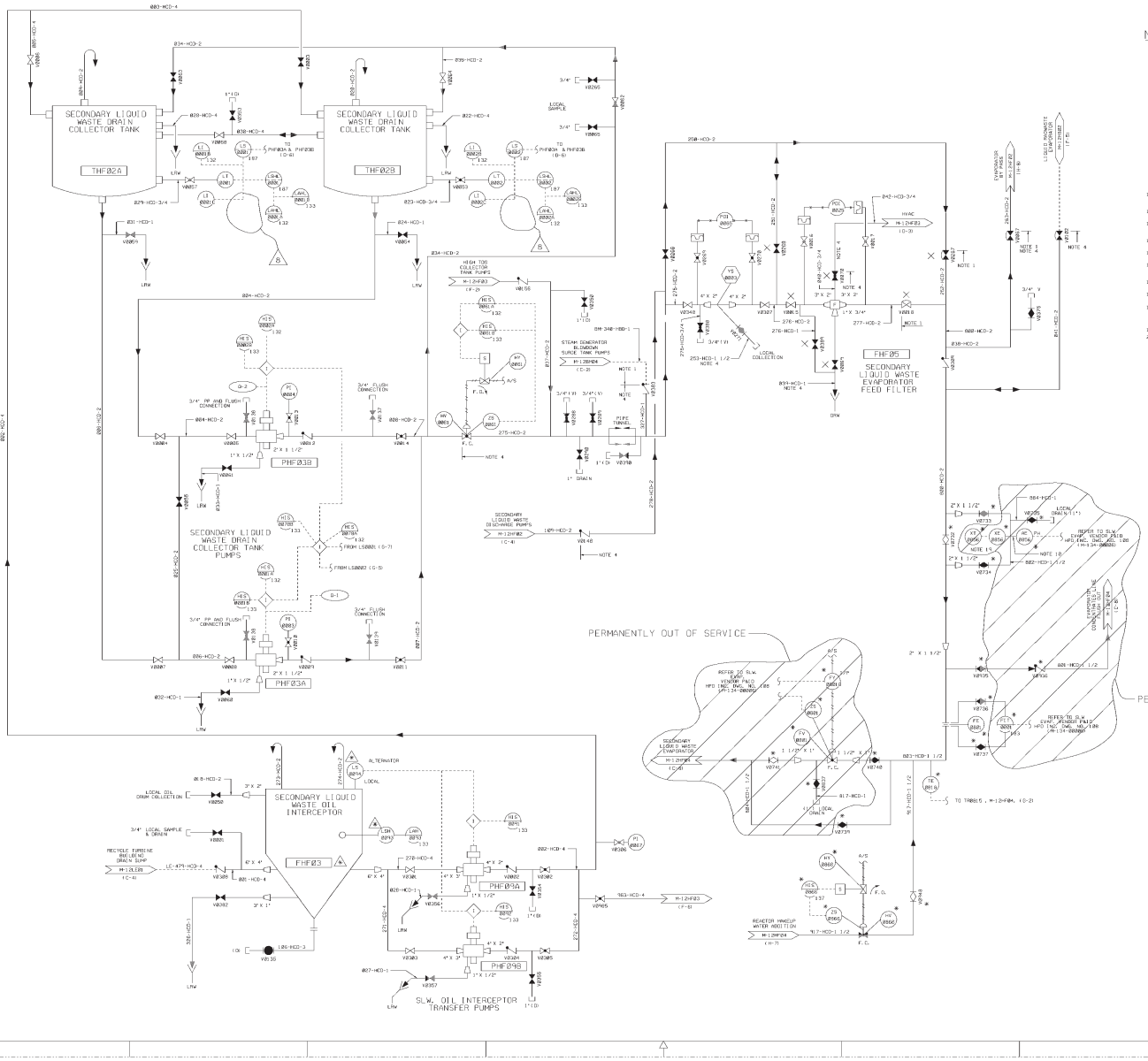
SECONDARY LIQUID WASTE DRAIN COLLECTOR TANK
THF02A
SECONDARY LIQUID WASTE DRAIN COLLECTOR TANK
THF02B
SECONDARY LIQUID WASTE DRAIN COLLECTOR TANK PUMPS
PHF03B
PHF03A
SECONDARY LIQUID WASTE OIL INTERCEPTOR
PHF03
PHF09A
PHF09B
SLW. OIL INTERCEPTOR TRANSFER PUMPS
HIGH TDS COLLECTOR TANK PUMPS
STEAM GENERATOR BLOWDOWN SURGE TANK PUMPS
SECONDARY LIQUID WASTE DISCHARGE PUMPS
SECONDARY LIQUID WASTE EVAPORATOR FEED FILTER
PHF05
PERMANENTLY OUT OF SERVICE
PERMANENTLY OUT OF SERVICE
REFER TO SLW. EVAP. VENDOR PACD HFD INC. DWG. NO. 108 (M-134-00002)
REFER TO SLW. EVAP. VENDOR PACD HFD INC. DWG. NO. 108 (M-134-00002)
SECONDARY LIQUID WASTE EVAPORATOR
REACTOR MAKEUP WATER ADDITION
RECYCLE TURBINE BUILDING DRAIN SUMP
LOCAL OIL DRAIN COLLECTION
LOCAL SAMPLE & DRAIN
ALTERNATOR
LOCAL
LOCAL SAMPLE
TO TRBB15, M-12-F04, (D-2)
TO PHF03A & PHF03B (D-4)
TO PHF03A & PHF03B (D-6)
FROM LS8002 (G-7)
FROM LS8002 (G-5)
LOCAL COLLECTION
LOCAL DRAIN
PIPE TUNNEL
1" DRAIN
3/4" FLUSH CONNECTION
3/4" PP AND FLUSH CONNECTION
HVAC
M-12HF03 (D-3)
M-12HF02 (C-4)
M-12HF03 (F-6)
M-12HF04 (H-7)
M-12HF03 (F-6)
M-12HF03 (F-5)
M-12HF02 (C-2)
M-12HF02 (C-4)
M-12HF03 (F-2)
M-12HF03 (F-6)
M-12HF03 (F-5)
M-12HF03 (F-6)
M-12HF03 (F-2

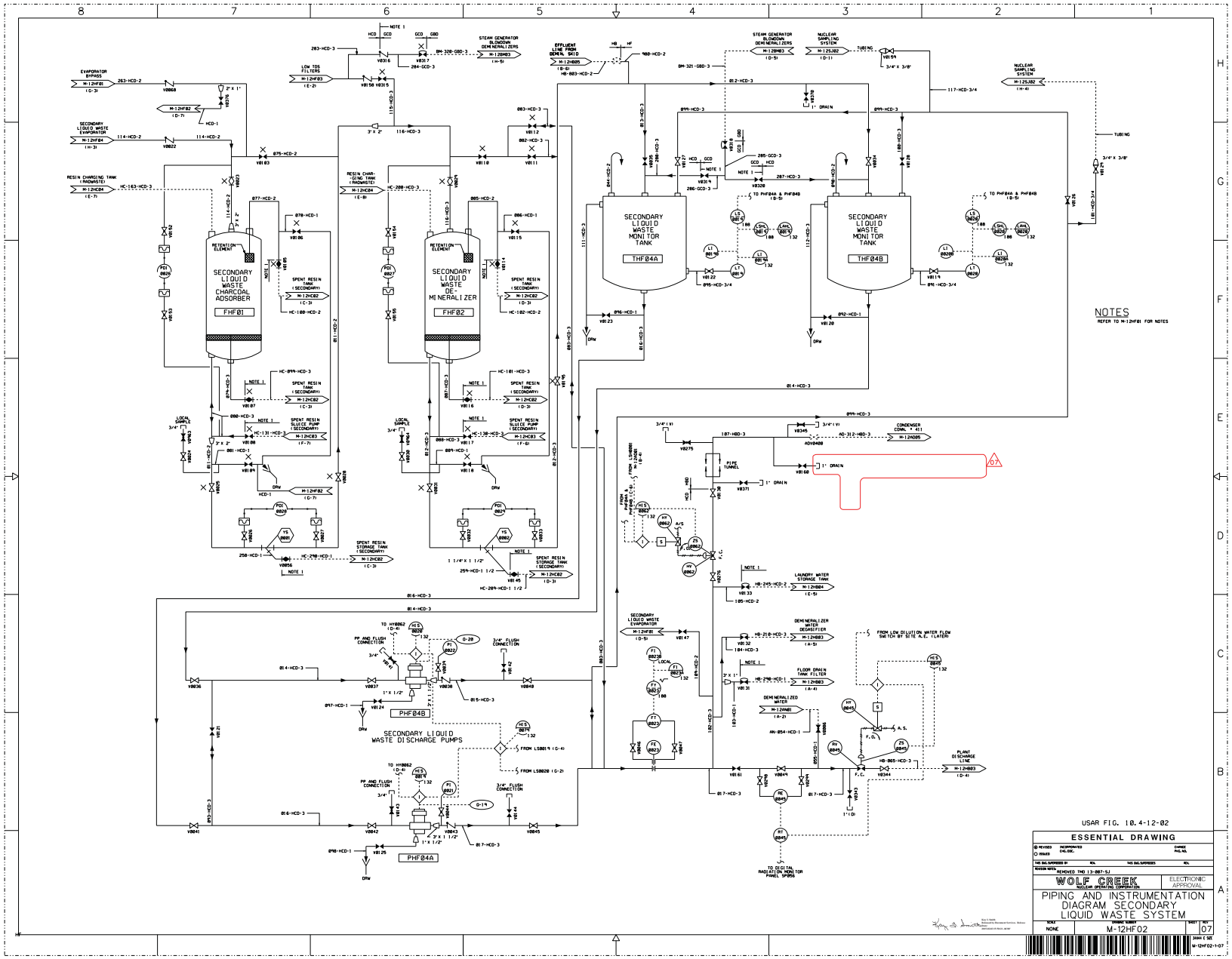
SECONDARY LIQUID WASTE CHARCOAL ADSORBER
FHF01
SECONDARY LIQUID WASTE DE-MINERALIZER
FHF02
SECONDARY LIQUID WASTE MONITOR TANK
THF04A
SECONDARY LIQUID WASTE MONITOR TANK
THF04B
PHF04B
PHF04A
SECONDARY LIQUID WASTE DISCHARGE PUMPS
NOTES
REFER TO M-12HF01 FOR NOTES
USAR FIG. 10.4-12-02
ESSENTIAL DRAWING
WOLF CREEK
PIPING AND INSTRUMENTATION DIAGRAM SECONDARY LIQUID WASTE SYSTEM
M-12HF02
07

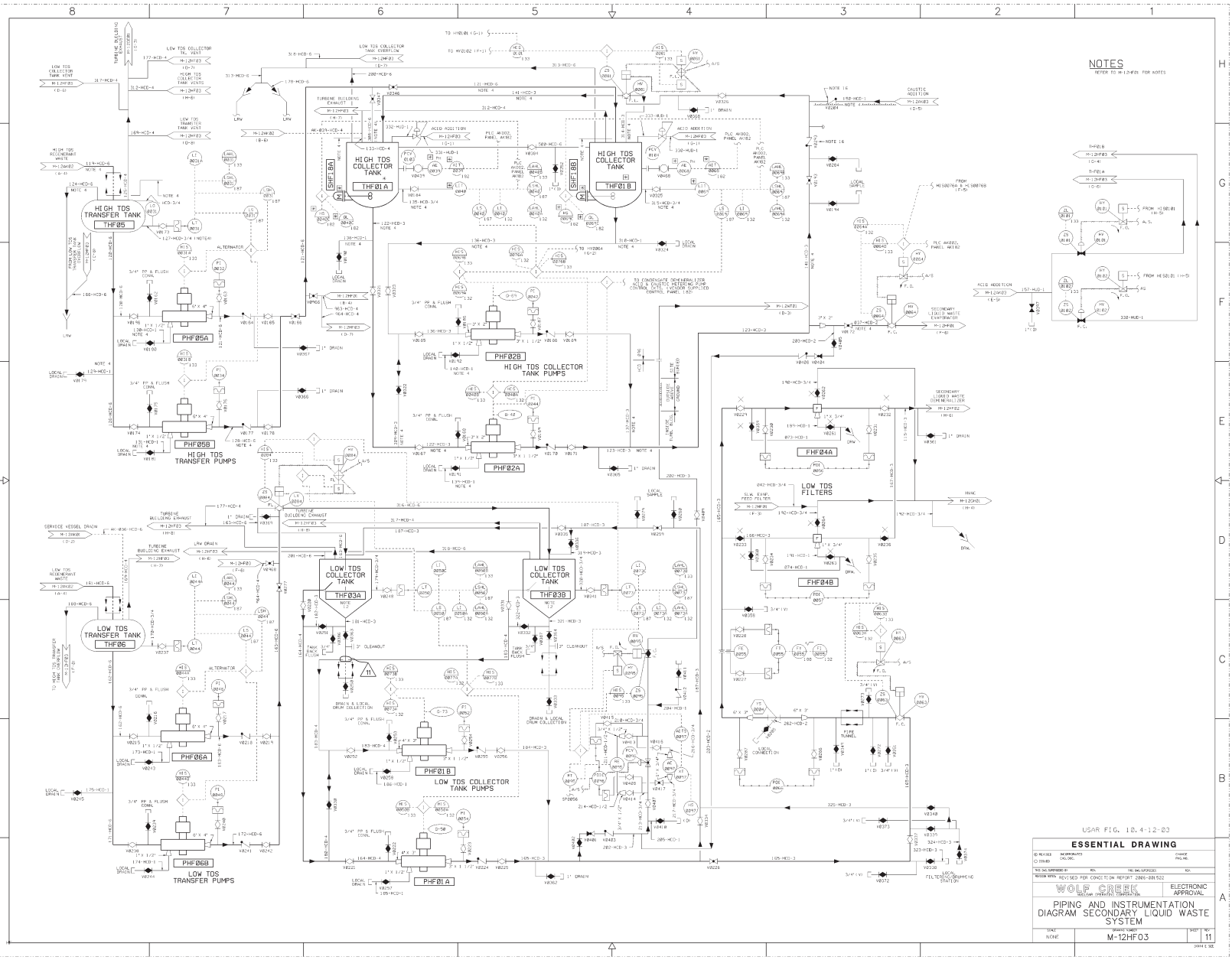

Released by Document Services Release Date: 10/26/06

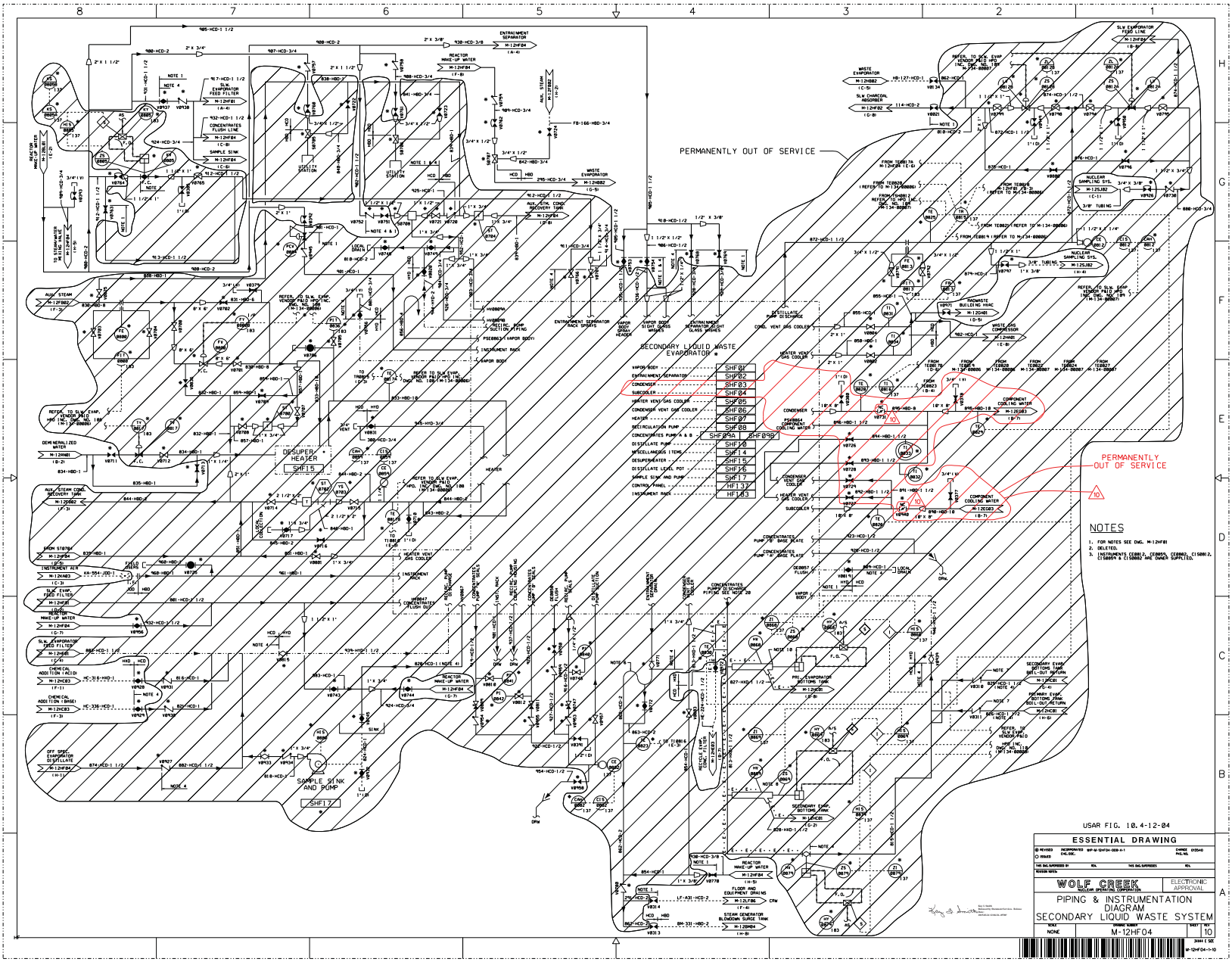
SECONDARY LIQUID WASTE EVAPORATOR
PERMANENTLY OUT OF SERVICE
PERMANENTLY OUT OF SERVICE
DESUPER-HEATER
SHF15
SAMPLE SINK AND PUMP
SHF17
NOTES
1. FOR NOTES SEE DWG. M-12HF01
2. DELETED.
3. INSTRUMENTS CE0857, CE0854, CE0867, CI5081 2, CI5085 & CI5082 ARE OWNER SUPPLIED.
USAR FIG. 10.4-12-04
ESSENTIAL DRAWING
WOLF CREEK
NUCLEAR OPERATING CORPORATION
ELECTRONIC APPROVAL
PIPING & INSTRUMENTATION DIAGRAM
SECONDARY LIQUID WASTE SYSTEM
SCALE NONE
DRAWING NUMBER M-12HF04
SHEET 1 OF 10
M-12HF04-1-10