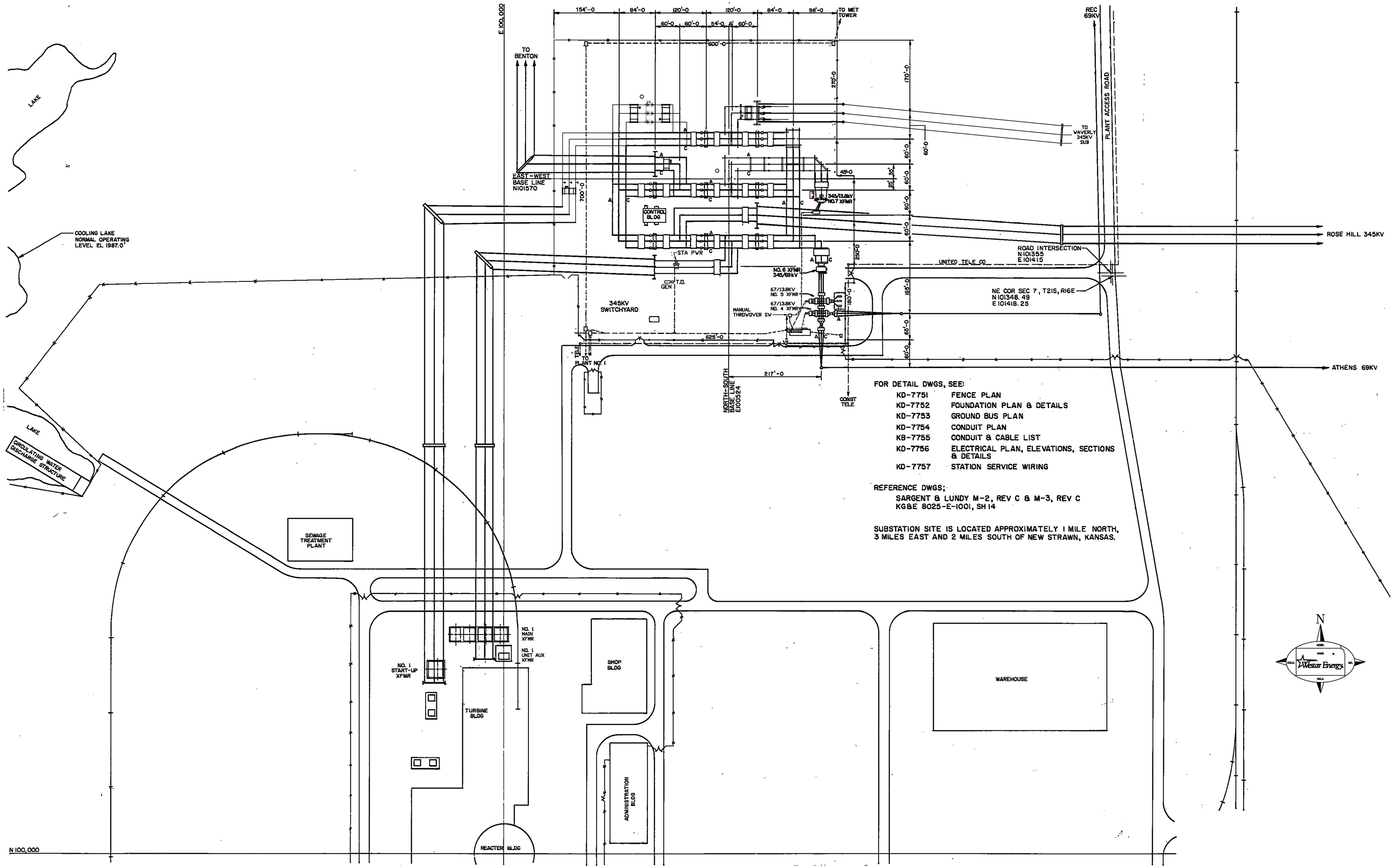

FOR DETAIL DWGS, SEE:

KD-7751	FENCE PLAN
KD-7752	FOUNDATION PLAN & DETAILS
KD-7753	GROUND BUS PLAN
KD-7754	CONDUIT PLAN
KB-7755	CONDUIT & CABLE LIST
KD-7756	ELECTRICAL PLAN, ELEVATIONS, SECTIONS & DETAILS
KD-7757	STATION SERVICE WIRING

REFERENCE DWGS;

SARGENT & LUNDY M-2, REV C & M-3, REV C
KG&E 8025-E-1001, SH 14

SUBSTATION SITE IS LOCATED APPROXIMATELY 1 MILE NORTH, 3 MILES EAST AND 2 MILES SOUTH OF NEW STRAWN, KANSAS.

DC7 04/01/2021

USAR FIG. 8.2-3

REV.	REVISION DESCRIPTION	DATE	BY/CK
11	ADDED 150KV GENERATOR	11-10-97	JDW
10	REMOVED CRAIG	3-3-92	GM/KR
9	CHANGED LOCATION OF FENCE BY NO. 4 & 5 TRANSFORMERS	10-30-84	MA/LG/BR
8	ADDED CAPACITOR BANK AND ASSOCIATED EQUIPMENT	8-29-84	JC/LG/BR

REV.	REVISION DESCRIPTION	DATE	BY/CK
15	AS-BUILT PER FIELD CORRECTIONS	04/01/21	GLL/KDJ
14	CONFORMED TO CONSTRUCTION RECORDS	04-20-2018	B&V
13	CONFORMED TO CONSTRUCTION RECORDS	12-22-16	B&V
12	ADDED WAVERLY TO LA CYGNE 345KV TERMINAL DESTINATION	3-23-15	MSA

DRAWN BY CDC DATE
DESIGNED BY RLD DATE
APPROVED BY J.H. HANSBERRY DATE 7-2-76

SCALE: 1" = 100'
W.R. NO.

Westar Energy.

TITLE
WOLF CREEK SUBSTATION
GENERAL PLAN

DWG. NO. KD-7750
SHEET NO. 1 OF 1
REV. 15

GROUP: ESUB USER: DESIGN CAD FILE NO.: SK7458_D775001_INTERFACE.DWG

LEGEND

CSP	CONTAINMENT SPRAY PUMP
RCP	REACTOR COOLANT PUMP
RHRP	RESIDUAL HEAT REMOVAL PUMP
SIP	SAFETY INJECTION PUMP
CCP	CENTRIFUGAL CHARGING PUMP
CCWP	COMPONENT COOLING WATER PUMP
AFWP	AUXILIARY FEEDWATER PUMP
ESWP	ESSENTIAL SERVICE WATER PUMP
HTDP	HEATER DRAIN PUMP
CDP	CONDENSATE PUMP
CCHC	CENTRAL CHILLER COMPRESSOR
MUP	MAKEUP WATER PUMP
SWP	SERVICE WATER PUMP
FP	FIRE PUMP
CWP	CIRCULATING WATER PUMP
ESF	ENGINEERED SAFETY FEATURES
DG	DIESEL GENERATOR
CLASS IE SYSTEM	NUCLEAR SAFETY RELATED ELECTRICAL SYSTEMS
A	QUALITY ASSURANCE EQUIPMENT
	BLDG. EXTERIOR WALL
	POWER BLOCK COMPLEX INTERIOR WALL
FWP	FEED WATER PUMP

NOTES:

1. THIS DRAWING IS FOR PLANNING PURPOSES ONLY. SEE SYSTEM OPERATION ONE - LINE DIAGRAM AND ELECTRICAL DRAWINGS FOR SWITCHING INFORMATION AND DETAILS.
2. DELETE
3. BUSES, TRANSFORMERS AND GENERATORS HAVE NO PREFIX.
4. THIS DWG. IS NOT PHYSICALLY ORIENTED
5. EQUIPMENT NO. IN PARENTHESES IS THE SARGENT & LUNDY I.D. NUMBER AND ALSO THE EQUIPMENT DATABASE I.D. NO. (EG. EIS, EMPAC & CURATOR).
6. REFER TO DWG. 8025-E-1021 FOR CONTINUATION.
7. FOR DISTRIBUTION SYSTEM CONFIGURATION ASSUMPTIONS AND REQUISITES SEE DWG. KD-7496A.
8. ALTERNATE POWER SUPPLY FROM THE CONSTRUCTION POWER LOOP IS PROVIDED IN THE WAREHOUSE VIA A TRANSFER SWITCH AT LC SL2E.
9. EACH KU01 DG IS PERMANENTLY CONNECTED TO A HIGH RESISTANCE GROUND. WHEN IN NORMAL OPERATION, THE FIRST DG CONNECTED TO THE BUS WILL BE SWITCHED TO A LOW RESISTANCE GROUND.
10. DELETE
11. XNB02 CONTAINS AN AUTOMATIC LOAD TAP CHANGER AND AUXILIARY TRANSFORMER: SEE E-074A SERIES DRAWINGS FOR MORE INFORMATION.

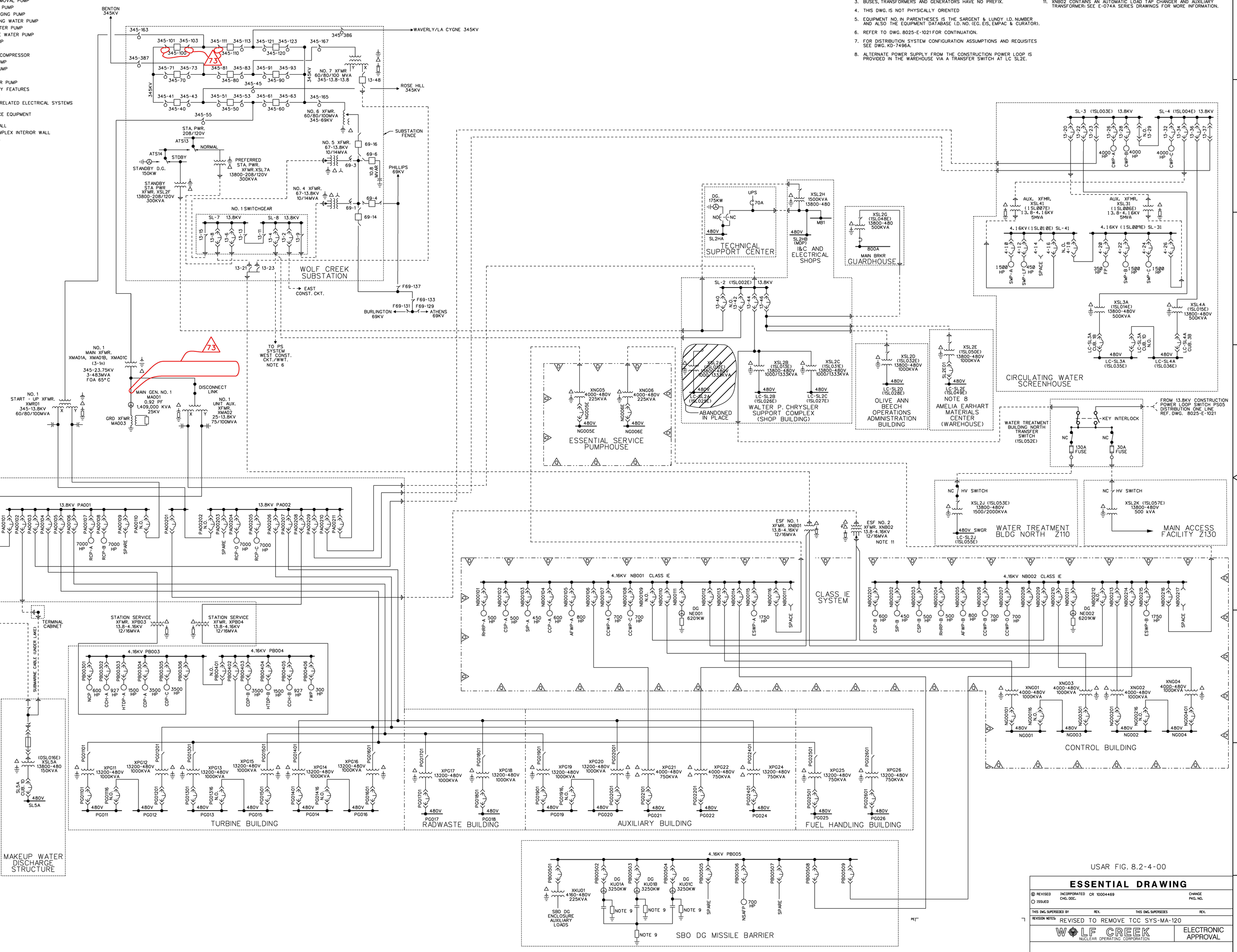

USAR FIG. 8.2-4-00

ESSENTIAL DRAWING

REVISED / ISSUED — INCORPORATED CHG. DOC. CR 10004469 — CHANGE PKG. NO.

THIS DWG. SUPERSEDED BY — REV. — THIS DWG. SUPERSEDES — REV.

REVISION NOTES: REVISED TO REMOVE TCC SYS-MA-120

WOLF CREEK NUCLEAR OPERATING CORPORATION — ELECTRONIC APPROVAL

ONE LINE DIAGRAM

SCALE	DRAWING NUMBER	SHEET	REV
NONE	KD-7496	1	73

DC7 05/11/2021

34X44 E SIZE

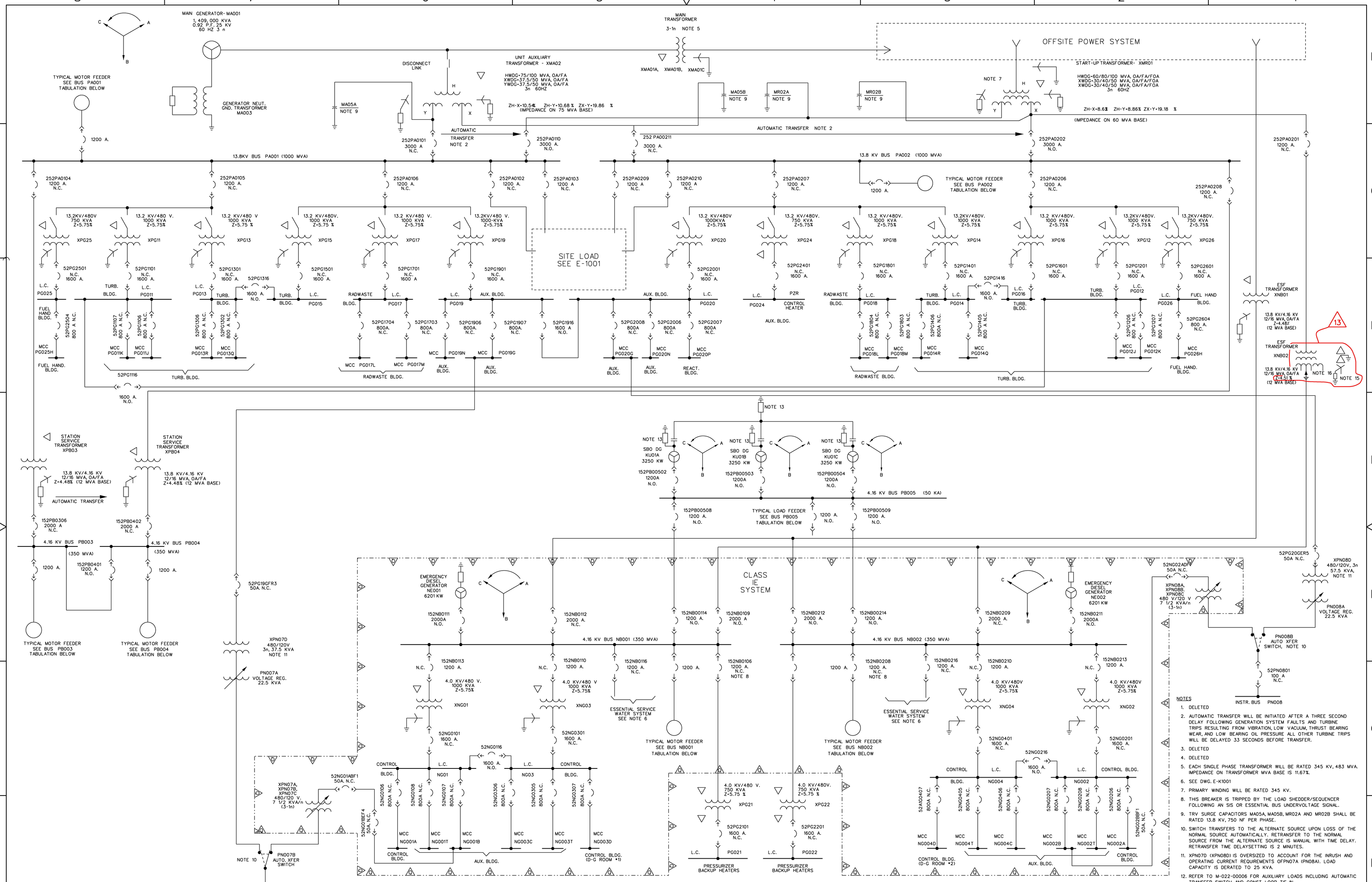

13.8 KV BUS PA001	H.P.	BREAKER NO.
REACTOR COOLANT PUMP DPBB01A	7000	252PA0107
REACTOR COOLANT PUMP DPBB01B	7000	252PA0108
BUS PA002		
REACTOR COOLANT PUMP DPBB01C	7000	252PA0205
REACTOR COOLANT PUMP DPBB01D	7000	252PA0204

4.16 KV CLASS 1E, BUS NB001		
RESIDUAL HEAT REMOVAL PUMP DPEJ01A	500	152NB0101
SAFETY INJECTION PUMP DPEM01A	450	152NB0103
CENTRIFUGAL CHARGING PUMP DPBG05A	600	152NB0104
COMPONENT COOLING WATER PUMP DPEG01A	700	152NB0107
COMPONENT COOLING WATER PUMP DPEG01C	700	152NB0108
CONTAINMENT SPRAY PUMP DPEN01A	500	152NB0102
AUXILIARY FEEDWATER PUMP DPAL01A	800	152NB0105
ESSENTIAL SERVICE WATER PUMP DPEF01A	1750	152NB0115

4.16 KV CLASS 1E, BUS NB002	H.P.	BREAKER NO.
RESIDUAL HEAT REMOVAL PUMP DPEJ01B	500	152NB0204
SAFETY INJECTION PUMP DPEM01B	450	152NB0202
CENTRIFUGAL CHARGING PUMP DPBG05B	600	152NB0201
COMPONENT COOLING WATER PUMP DPEG01B	700	152NB0206
COMPONENT COOLING WATER PUMP DPEG01D	700	152NB0207
CONTAINMENT SPRAY PUMP DPEN01B	500	152NB0203
AUXILIARY FEEDWATER PUMP DPAL01B	800	152NB0205
ESSENTIAL SERVICE WATER PUMP DPEF01B	1750	152NB0215
BUS PB003		
HEATER DRAIN PUMP DPAF01A	1500	152PB0303
CONDENSATE PUMP DPAD01A	3500	152PB0304
CONDENSATE PUMP DPAD01C	3500	152PB0305
CENTRAL CHILLER COMPRESSOR DSGB01A	927	152PB0302
NORMAL CHARGING PUMP DPBG04	600	152PB0301
BUS PB004		
CONDENSATE PUMP DPAD01B	3500	152PB0403
HEATER DRAIN PUMP DPAF01B	1500	152PB0404
CENTRAL CHILLER COMPRESSOR DSGB01B	927	152PB0405
MOTOR DRIVEN FEEDWATER PUMP DPAE02	300	152PB0406
BUS PB005		
SBO DG PEC XFMR	—	152PB00501 NOTE 12
NON-SAFETY AUX. FEEDWATER PUMP DPAP01	—	152PB00506
FUTURE CONST. LOOP FEEDER	—	152PB00507

NOTES

1. DELETED
2. AUTOMATIC TRANSFER WILL BE INITIATED AFTER A THREE SECOND DELAY FOLLOWING GENERATION SYSTEM FAULTS AND TURBINE TRIPS RESULTING FROM VIBRATION, LOW VACUUM, THRUST BEARING WEAR, AND LOW BEARING OIL PRESSURE ALL OTHER TURBINE TRIPS WILL BE DELAYED 33 SECONDS BEFORE TRANSFER.
3. DELETED
4. DELETED
5. EACH SINGLE PHASE TRANSFORMER WILL BE RATED 345 KV, 483 MVA. IMPEDANCE ON TRANSFORMER MVA BASE IS 11.67%.
6. SEE DWG. E-K1001
7. PRIMARY WINDING WILL BE RATED 345 KV.
8. THIS BREAKER IS TRIPPED BY THE LOAD SHEDDER/SEQUENCER FOLLOWING AN SIS OR ESSENTIAL BUS UNDERVOLTAGE SIGNAL.
9. TRV SURGE CAPACITORS MA05A, MA05B, MR02A AND MR02B SHALL BE RATED 13.8 KV, 750 NF PER PHASE.
10. SWITCH TRANSFERS TO THE ALTERNATE SOURCE UPON LOSS OF THE NORMAL SOURCE AUTOMATICALLY. RETRANSFER TO THE NORMAL SOURCE FROM THE ALTERNATE SOURCE IS MANUAL WITH TIME DELAY. RETRANSFER TIME DELAYSETTING IS 2 MINUTES.
11. XPN07D (XPN08D) IS OVERSIZED TO ACCOUNT FOR THE INRUSH AND OPERATING CURRENT REQUIREMENTS OFPN07A (PN08A). LOAD CAPACITY IS DERATED TO 25 KVA.
12. REFER TO M-022-00006 FOR AUXILIARY LOADS INCLUDING AUTOMATIC TRANSFER SWITCH AND CONST. LOOP TIE-IN.
13. EACH KU01 DG IS PERMANENTLY CONNECTED TO A HIGH RESISTANCE GROUND. WHEN IN NORMAL OPERATION, THE FIRST DG CONNECTED TO THE BUS WILL BE SWITCHED TO A LOW RESISTANCE GROUND. REFER TO DWG M-022-00002 (SH E1-E5) FOR ADDITIONAL DETAILS.
14. DELETED.
15. XNB02 CONTAINS AN AUTOMATIC LOAD TAP CHANGER IN FIXED TAP MODE, SEE E-074A SERIES DRAWINGS FOR MORE INFORMATION.
16. XNB02 TRANSFORMER CONTAINS 437V AUXILIARY WINDING FOR TRANSFORMER COOLING FANS, HEATERS, LTC CONTROL. SEE E-074A-00049, E-074A-00051, AND E-074A-00052 FOR MORE INFO.

13

ESSENTIAL DRAWING

REVISED — INCORPORATED WIP-E-11001-012-B-1 CHANGE 012513
ISSUED — CHG. DOC. PKG. NO.

THIS DWG. SUPERSEDED BY REV. THIS DWG. SUPERSEDES REV.

REVISION NOTES:

WOLF CREEK NUCLEAR OPERATING CORPORATION

ELECTRONIC APPROVAL

DC7 04/16/2021

MAIN SINGLE LINE DIAGRAM

SCALE	DRAWING NUMBER	SHEET	REV
NONE	E-11001		13

34X44 E SIZE

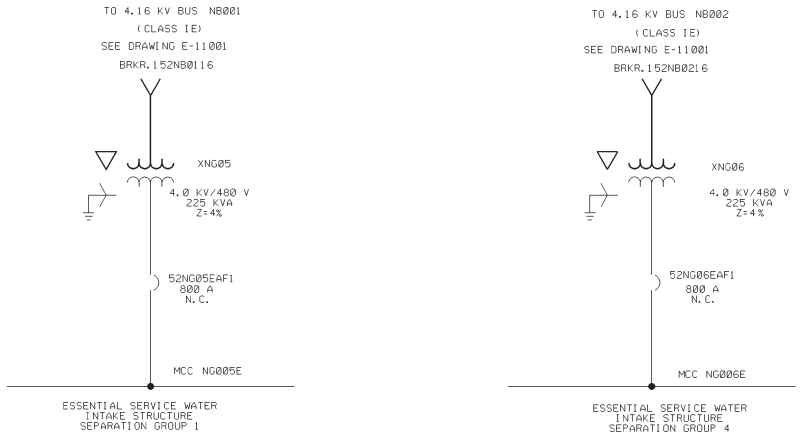

NOTE

USAR FIG. 8.3-1-02

ESSENTIAL DRAWING

(X) REVISED INCORPORATED CHANGE
( ) ISSUED CHG. DOC. PKG. NO.

THIS DWG SUPERSEDED BY _____ REV. _ THIS DWG SUPERSEDES E-K1001(D) REV. 2

REVISION NOTES: ELECTRONICALLY CONVERTED PER AP 05-010

WOLF CREEK NUCLEAR OPERATING CORPORATION

ELECTRONIC APPROVAL

SINGLE LINE DIAGRAM
ESSENTIAL SERVICE WATER
SYSTEM

SCALE	DRAWING NUMBER	SHEET	REV
NONE	E-K1001		03

17X22 C SIZE

THIS DRAWING AND THE DESIGN IT COVERS IS THE PROPERTY OF THE UTILITIES WHICH ARE PARTICIPATING IN THE SNUPPS PROJECT IT IS LOANED ON THE BORROWER'S EXPRESS AGREEMENT THAT IT WILL NOT BE REPRODUCED, COPIED, LOANED, EXHIBITED, OR USED EXCEPT IN THE LIMITED WAY AND PRIVATE USE PERMITTED BY WRITTEN CONSENT GIVEN BY THE SNUPPS UTILITIES TO THE BORROWER.

Released by Document Services Release Date: 12/04/02

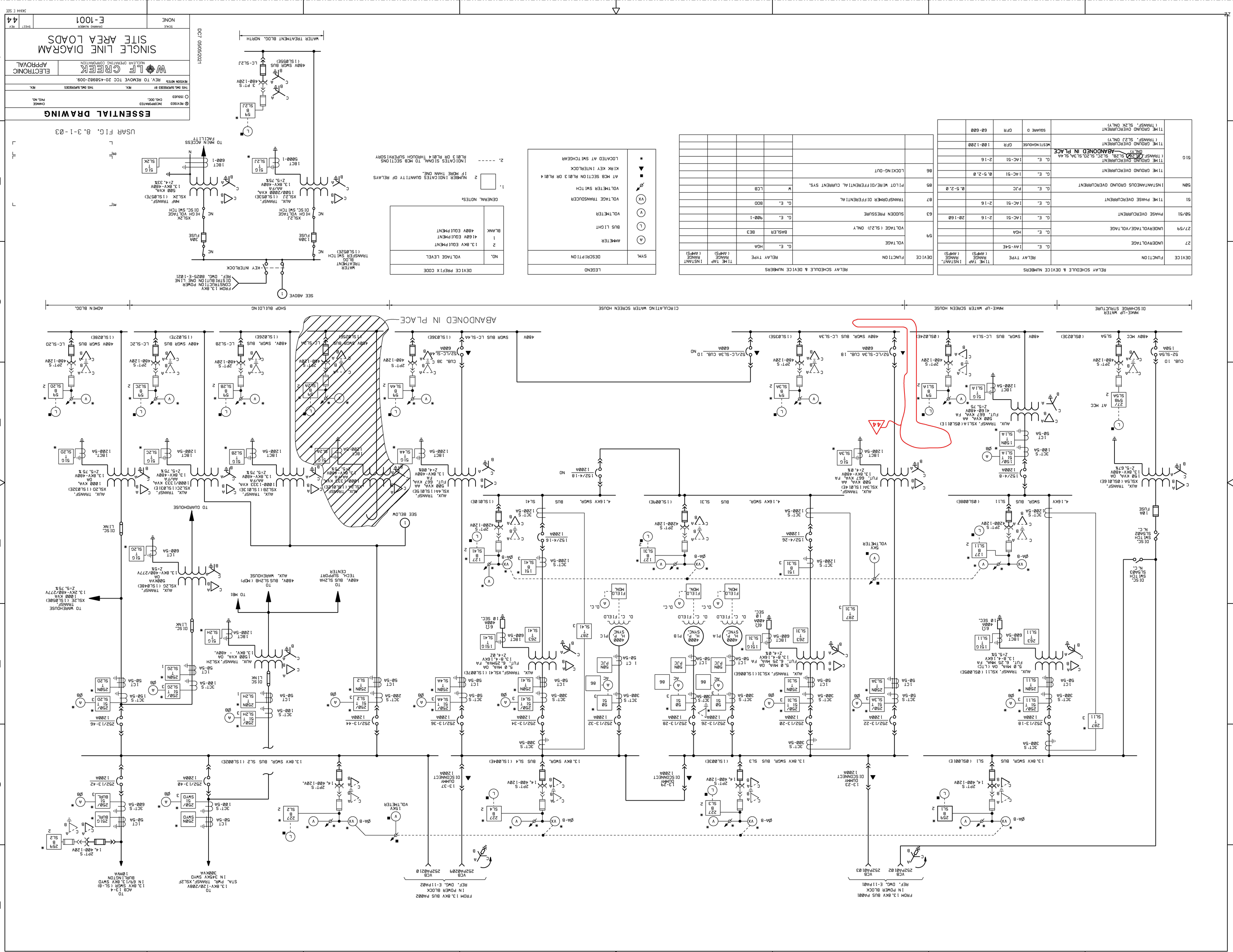
ESSENTIAL DRAWING
WOLF CREEK NUCLEAR OPERATING CORPORATION
ELECTRONIC APPROVAL
SINGLE LINE DIAGRAM
SITE AREA LOADS
E-1001
44
DC7 05/05/2021
USAR FIG. 8.3-1-03
ABANDONED IN PLACE
MAKE-UP WATER DISCHARGE STRUCTURE
MAKE-UP WATER SCREEN HOUSE
CIRCULATING WATER SCREEN HOUSE
SHOP BUILDING
ADMIN BLDG.
WATER TREATMENT BLDG. NORTH
WATER TREATMENT BLDG
TO MAIN ACCESS FACILITY
TO GUARDHOUSE
TO WAREHOUSE
TO MB1
TO AUX. WAREHOUSE
TO 480V. BUS SL2H4 TECH. SUPPORT CENTER
TO 480V. BUS SL2H4 (MDP)
FROM 13.8KV BUS F0001 IN POWER BLOCK REF. DWG. E-11F001
FROM 13.8KV BUS F0002 IN POWER BLOCK REF. DWG. E-11F002
TO 13.8KV-120/208V STA. PWR. TRANSF. XSLCF 3000KVA
TO ACB 13-4 13.8KV SWGR (SL-B) IN E9/13.8KV SWYD BUILDING 10MVA
RELAY SCHEDULE & DEVICE NUMBERS
DEVICE PREFIX CODE
LEGEND
GENERAL NOTES
SEE ABOVE
SEE BELOW
KEY INTERLOCK
DISC. LINK
DISC. SWITCH SL5A02 N.C.
DISC. SWITCH SL5A03 N.C.
13.8KV SWGR. BUS SL1 (0SL0001E)
13.8KV SWGR. BUS SL2 (1SL0002E)
13.8KV SWGR. BUS SL3 (1SL0003E)
13.8KV SWGR. BUS SL4 (1SL0004E)
4.16KV SWGR. BUS SL11 (0SL0008E)
4.16KV SWGR. BUS SL31 (1SL0009E)
4.16KV SWGR. BUS SL41 (1SL0010E)
480V SWGR BUS (1SL0056E)
480V SWGR. BUS LC-SL1A (0SL0024E)
480V SWGR. BUS LC-SL3A (1SL0036E)
480V MCC SL5A (0SL0023E)
480V SWGR. BUS LC-SL2A (1SL0026E)
480V SWGR. BUS LC-SL2B (1SL0027E)
480V SWGR BUS LC-SL2C
480V SWGR BUS LC-SL2D (1SL0028E)
SWGR BUS LC-SL4A (1SL0036E)
480V SWGR BUS SL2H (1SL0056E)
AUX. TRANSF. XSL1A (0SL0011E) 500 KVA, AA FUT. 667 KVA, FA 41.6D-480V Z=5.75
AUX. TRANSF. XSL3A (1SL0014E) 500 KVA, AA FUT. 667 KVA, FA 13.8KV-480V Z=4.0%
AUX. TRANSF. XSL4A (1SL0016E) 500 KVA, AA FUT. 667 KVA, FA 13.8KV-480V Z=4.00%
AUX. TRANSF. XSL2A (1SL0013E) 500/1333 KVA, AA/FA 13.8KV-480V Z=5.75%
AUX. TRANSF. XSL2B (1SL0013E) 1000-1333 KVA, AA/FA 13.8KV-480V Z=5.75%
AUX. TRANSF. XSLCC (1SL0031E) 1000/1333 KVA, AA/FA 13.8KV-480V Z=5.75%
AUX. TRANSF. XSLCD (1SL0032E) 1000 KVA, OA 13.8KV-480V Z=5.75%
AUX. TRANSF. XSL2D (1SL0023E) 500KVA OA 13.8KV-480V Z=5.75%
AUX. TRANSF. XSL2E (1SL0050E) 1000 KVA 13.2KV-480/277V Z=5.75%
AUX. TRANSF. XSL2H 1500 KVA, OA 13.8KV. - 480V.
AUX. TRANSF. XSLL1 (0SL0005E) 5.0 MVA, OA (LTC) FUT. 6.25 MVA, FA 13.8-4.16KV Z=5.5%
AUX. TRANSF. XSL3A (1SL0006E) 5.0 MVA, OA FUT. 6.25 MVA, FA 13.8-4.16KV Z=4.0%
AUX. TRANSF. XSL4A (1SL0007E) 5.0 MVA, OA FUT. 6.25MVA, FA 13.8-4.16KV Z=4.02
AUX. TRANSF. XSL2A (1SL0053E) 1500/2000 KVA, AA/FA 13.8KV-480V Z=5.75%
AUX. TRANSF. XSL2J (1SL0057E) 500 KVA, 13.8KV-480V Z=4.33%
MAP TRANSF. XSL2K (1SL0057E) 500 KVA, 13.8KV-480V Z=4.33%
52/LC-SL3A CUB. 18 600A
52/LC-SL3A CUB. 10 600A
52/LC-SL4A CUB. 38 600A
52-SL5A 1500A
52-SL6A 1500A
CUB. 10
CUB. 38
52/4-18 1200A
152/4-16 1200A
152/4-26 1200A
252/13-18 1200A
252/13-20 1200A
252/13-22 1200A
252/13-26 1200A
252/13-28 1200A
252/13-32 1200A
252/13-34 1200A
252/13-36 1200A
252/13-40 1200A
252/13-42 1200A
252/13-44 1200A
252/13-46 1200A
13-23 DUMMY DISCONNECT 1200A
13-29 DUMMY DISCONNECT 1200A
13-37 DUMMY DISCONNECT 1200A
252PA0102 VCB
252PA0103 VCB
252PA0209 VCB
252PA0210 VCB
FROM 13.8KV BUS F0001 IN POWER BLOCK REF. DWG. E-11F001
FROM 13.8KV BUS F0002 IN POWER BLOCK REF. DWG. E-11F002
ZZ
A
B
C
D
E
F
G
H
1
2
3
4
5
6
7
8

SAFETY-RELATED LOADS

LOAD DESCRIPTION	NAMEPLATE LOAD RATING		REFER NOTES	ACCIDENT TYPE [1]	TIME TO START (SEC) [2]	NE001 KW LOADING [3] < 30 MIN. [4]	NE001 30 MIN. - 2 HRS [5]	NE001 2 HRS - 24 HRS [5]	NE001 24 HRS - 7 DAYS [5]	NE001 > 7 DAYS [6]	EQUIPMENT NO. / BUS NUMBER / LOAD SHED - SIS [7] / LOAD SHED - LOOP [7]		NE002 KW LOADING [3] < 30 MIN. [4]	NE002 30 MIN. - 2 HRS [5]	NE002 2 HRS - 24 HRS [5]	NE002 24 HRS - 7 DAYS [5]	NE002 > 7 DAYS [6]	WORST CASE KVAR LOADING [8]
<----- 4160 VOLT LOADS ----->																		
Component Cooling Water Pumps	HP/KW/KVA	700	9	LOOP	17 / 17	506.93	506.93	506.93	506.93	506.93	DPEG01A	DPEG01B	506.93	506.93	506.93	506.93	506.93	353.84
				MSLB		506.93	533.10	533.10	533.10	533.10	NB001	NB002	506.93	533.10	533.10	533.10	533.10	372.11
	Brake HP	672		LOCA		506.93	533.10	533.10	533.10	533.10	-	-	506.93	533.10	533.10	533.10	533.10	372.11
	Freq. Adj.	1.0303		SLOCA		506.93	533.10	533.10	533.10	533.10	UV1A	UV2A	506.93	533.10	533.10	533.10	533.10	372.11
Component Cooling Water Pumps	HP/KW/KVA	700	9	LOOP	MANUAL	0	0	0	0	0	DPEG01C	DPEG01D	0	0	0	0	0	0
				MSLB		0	0	0	0	0	NB001	NB002	0	0	0	0	0	0
	Brake HP	672		LOCA		506.93	533.10	533.10	533.10	533.10	-	-	506.93	533.10	533.10	533.10	533.10	372.11
	Freq. Adj.	1.0303		SLOCA		0	0	0	0	0	UV1B	UV2B	0	0	0	0	0	0
Containment Spray Pumps	HP/KW/KVA	500		LOOP	- / -	0	0	0	0	0	DPEN01A	DPEN01B	0	0	0	0	0	0
				MSLB		404.06	404.06	404.06	0	0	NB001	NB002	404.06	404.06	404.06	0	0	173.34
	Brake HP	505		LOCA	NOTE 10	404.06	404.06	404.06	0	0	-	-	404.06	404.06	404.06	0	0	173.34
	Freq. Adj.	1.0303		SLOCA		0	0	0	0	0	UV1A	UV2A	0	0	0	0	0	0
Residual Heat Removal Pumps	HP/KW/KVA	500		LOOP	MANUAL	0	381.60	381.60	381.60	381.60	DPEJ01A	DPEJ01B	0	381.60	381.60	381.60	381.60	167.13
				MSLB	22 / 22	262.35	262.35	0	381.60	381.60	NB001	NB002	262.35	262.35	0	381.60	381.60	167.13
	Brake HP	510		LOCA		405.45	405.45	405.45	381.60	381.60	-	-	405.45	405.45	405.45	381.60	381.60	177.57
	Freq. Adj.	1.0303		SLOCA		262.35	262.35	381.60	381.60	381.60	UV1A	UV2A	262.35	262.35	381.60	381.60	381.60	167.13
Essential Service Water Pumps	HP/KW/KVA	1750		LOOP	32 / 37	1509.16	1509.16	1509.16	1509.16	1509.16	DPEF01A	DPEF01B	1509.16	1509.16	1509.16	1509.16	1509.16	773.17
				MSLB		1509.16	1509.16	1509.16	1509.16	1509.16	NB001	NB002	1509.16	1509.16	1509.16	1509.16	1509.16	773.17
	Brake HP	1872		LOCA		1509.16	1509.16	1509.16	1509.16	1509.16	-	-	1509.16	1509.16	1509.16	1509.16	1509.16	773.17
	Freq. Adj.	1.0303		SLOCA		1509.16	1509.16	1509.16	1509.16	1509.16	UV1A	UV2A	1509.16	1509.16	1509.16	1509.16	1509.16	773.17
Centrifugal Charging Pumps	HP/KW/KVA	600		LOOP	12 / 12	384.47	384.47	384.47	384.47	384.47	DPBG05A	DPBG05B	384.47	384.47	384.47	384.47	384.47	164.94
				MSLB		540.22	540.22	384.47	384.47	384.47	NB001	NB002	540.22	540.22	384.47	384.47	384.47	218.57
	Brake HP	680		LOCA		545.84	545.84	545.84	384.47	384.47	-	-	545.84	545.84	545.84	384.47	384.47	220.84
	Freq. Adj.	1.0303		SLOCA		540.22	540.22	384.47	384.47	384.47	-	-	540.22	540.22	384.47	384.47	384.47	218.57
Safety Injection Pumps	HP/KW/KVA	450		LOOP	- / -	0	0	0	0	0	DPEM01A	DPEM01B	0	0	0	0	0	0
				MSLB	17 / 17	370.04	370.04	0	0	0	NB001	NB002	370.04	370.04	0	0	0	176.06
	Brake HP	460		LOCA		370.04	370.04	370.04	348.32	348.32	-	-	370.04	370.04	370.04	348.32	348.32	176.06
	Freq. Adj.	1.0303		SLOCA		370.04	370.04	348.32	348.32	348.32	UV1A	UV2A	370.04	370.04	348.32	348.32	348.32	176.06
Auxiliary Feed Water Pumps	HP/KW/KVA	800		LOOP	42 / 42	551.49	551.49	551.49	551.49	551.49	DPAL01A	DPAL01B	551.49	551.49	551.49	551.49	551.49	322.85
				MSLB		551.49	551.49	551.49	551.49	551.49	NB001	NB002	551.49	551.49	551.49	551.49	551.49	322.85
	Brake HP	690		LOCA		551.49	551.49	551.49	551.49	551.49	-	-	551.49	551.49	551.49	551.49	551.49	322.85
	Freq. Adj.	1.0303		SLOCA		551.49	551.49	551.49	551.49	551.49	UV1A	UV2A	551.49	551.49	551.49	551.49	551.49	322.85
<----- (ALL REMAINING LOADS ARE 480 VOLT)																		
125 VDC Swing Battery Chargers	HP/KW/KVA	1	12	LOOP	12 / 12	1.00	1.00	1.00	1.00	1.00	NK025	NK026	1.00	1.00	1.00	1.00	1.00	4.56
				MSLB		1.00	1.00	1.00	1.00	1.00	NG001	NG004	1.00	1.00	1.00	1.00	1.00	4.56
	Brake HP	N/A		LOCA		1.00	1.00	1.00	1.00	1.00	-	-	1.00	1.00	1.00	1.00	1.00	4.56
	Freq. Adj.	1		SLOCA		1.00	1.00	1.00	1.00	1.00	-	-	1.00	1.00	1.00	1.00	1.00	4.56
MCC Distribution Panels	HP/KW/KVA	45		LOOP	12 / 12	25.03	25.03	25.03	25.03	25.03	-	-	25.15	25.15	25.15	25.15	25.15	12.18
				MSLB		25.03	25.03	25.03	25.03	25.03	MCC	MCC	25.15	25.15	25.15	25.15	25.15	12.18
	Brake HP	N/A		LOCA		25.03	25.03	25.03	25.03	25.03	-	-	25.15	25.15	25.15	25.15	25.15	12.18
	Freq. Adj.	1.01		SLOCA		25.03	25.03	25.03	25.03	25.03	-	-	25.15	25.15	25.15	25.15	25.15	12.18
Motor Operated Valves	HP/KW/KVA	85/86.6		LOOP	12 / 12	65.73	0	0	0	0	-	-	63.54	0	0	0	0	42.04
				MSLB		65.73	0	0	0	0	MCC	MCC	63.54	0	0	0	0	42.04
	Brake HP	N/A		LOCA		65.73	0	0	0	0	-	-	63.54	0	0	0	0	42.04
	Freq. Adj.	1.01		SLOCA		65.73	0	0	0	0	-	-	63.54	0	0	0	0	42.04
125 Volt Battery Chargers	HP/KW/KVA	39		LOOP	12 / 12	46.47	46.47	46.47	46.47	46.47	NK021	NK022	46.47	46.47	46.47	46.47	46.47	44.79
				MSLB		46.47	46.47	46.47	46.47	46.47	NG001	NG004	46.47	46.47	46.47	46.47	46.47	44.79
	Brake HP	N/A		LOCA		46.47	46.47	46.47	46.47	46.47	-	-	46.47	46.47	46.47	46.47	46.47	44.79
	Freq. Adj.	1		SLOCA		46.47	46.47	46.47	46.47	46.47	-	-	46.47	46.47	46.47	46.47	46.47	44.79
125 Volt Battery Chargers	HP/KW/KVA	39		LOOP	12 / 12	46.47	46.47	46.47	46.47	46.47	NK023	NK024	46.47	46.47	46.47	46.47	46.47	44.79
				MSLB		46.47	46.47	46.47	46.47	46.47	NG003	NG002	46.47	46.47	46.47	46.47	46.47	44.79
	Brake HP	N/A		LOCA		46.47	46.47	46.47	46.47	46.47	-	-	46.47	46.47	46.47	46.47	46.47	44.79
	Freq. Adj.	1		SLOCA		46.47	46.47	46.47	46.47	46.47	-	-	46.47	46.47	46.47	46.47	46.47	44.79
Containment Coolers	HP/KW/KVA	150/75		LOOP	47 / 47	118.34	118.34	118.34	118.34	118.34	DSGN01A	DSGN01B	118.34	118.34	118.34	118.34	118.34	57.32
				MSLB		40.36	40.36	40.36	40.36	118.34	NG001	NG002	40.36	40.36	40.36	40.36	118.34	111.62
	Brake HP	146/46		LOCA		40.36	40.36	40.36	40.36	40.36	-	-	40.36	40.36	40.36	40.36	40.36	111.62
	Freq. Adj.	1.0303		SLOCA		40.36	40.36	40.36	40.36	40.36	-	-	40.36	40.36	40.36	40.36	40.36	111.62
Containment Coolers	HP/KW/KVA	150/75		LOOP	47 / 47	118.34	118.34	118.34	118.34	118.34	DSGN01C	DSGN01D	118.34	118.34	118.34	118.34	118.34	57.32
				MSLB		40.36	40.36	40.36	40.36	118.34	NG003	NG004	40.36	40.36	40.36	40.36	118.34	111.62
	Brake HP	146/46		LOCA		40.36	40.36	40.36	40.36	40.36	-	-	40.36	40.36	40.36	40.36	40.36	111.62
	Freq. Adj.	1.0303		SLOCA		40.36	40.36	40.36	40.36	40.36	-	-	40.36	40.36	40.36	40.36	40.36	111.62
Hydrogen Analyzer Pump	HP/KW/KVA	1		LOOP	MANUAL	0	0	0	0	0	SGS02A	SGS02B	0	0	0	0	0	0
				MSLB		0	0	0	0	0	NG001B	NG002B	0	0	0	0	0	0
	Brake HP	0.333		LOCA		0	0.36	0.36	0.36	0.36	-	-	0	0.36	0.36	0.36	0.36	0.57
	Freq. Adj.	1.0303		SLOCA		0	0.36	0.36	0.36	0.36	-	-	0	0.36	0.36	0.36	0.36	0.57
GK Compensatory Fans	HP/KW/KVA	75		LOOP	MANUAL	0	0	0	0	0	-	-	0	0	0	0	0	0
				MSLB		0	0	0	0	0	NG001A	NG002A	0	0	0	0	0	0
	Brake HP	N/A		LOCA		0	8.14	8.14	8.14	8.14	-	-	0	8.14	8.14	8.14	8.14	6.32
	Freq. Adj.	1.00		SLOCA		0	8.14	8.14	8.14	8.14	-	-	0	8.14	8.14	8.14	8.14	6.32
Hydrogen Mixing Fans	HP/KW/KVA	50/25		LOOP	12 / 12	22.36	22.36	22.36	22.36	22.36	DCGN03A	DCGN03B	22.36	22.36	22.36	22.36	22.36	24.44
				MSLB		9.30	9.30	9.30	9.30	22.36	NG001B	NG002B	9.30	9.30	9.30	9.30	22.36	26.68
	Brake HP	26.6/9.3		LOCA		9.30	9.30	9.30	9.30	9.30	-	-	9.30	9.30	9.30	9.30	9.30	26.68
	Freq. Adj.	1.0303		SLOCA		9.30	9.30	9.30	9.30	9.30	-	-	9.30	9.30	9.30	9.30	9.30	26.68
Hydrogen Mixing Fans	HP/KW/KVA	50/25		LOOP	12 / 12	22.36	22.36	22.36	22.36	22.36	DCGN03C	DCGN03D	22.36	22.36	22.36	22.36	22.36	24.44
				MSLB		9.30	9.30	9.30	9.30	22.36	NG001B	NG002B	9.30	9.30	9.30	9.30	22.36	26.68
	Brake HP	26.6/9.3		LOCA		9.30	9.30	9.30	9.30	9.30	-	-	9.30	9.30	9.30	9.30	9.30	26.68
	Freq. Adj.	1.01		SLOCA		9.30	9.30	9.30	9.30	9.30	-	-	9.30	9.30	9.30	9.30	9.30	26.68
ESW Traveling Water Screens	HP/KW/KVA	3		LOOP	52 / 57	2.96	2.96	2.96	2.96	2.96	DFEF01A	DFEF01B	2.96	2.96	2.96	2.96	2.96	1.56
				MSLB		2.96	2.96	2.96	2.96	2.96	NG005E	NG006E	2.96	2.96	2.96	2.96	2.96	1.56
	Brake HP	-		LOCA		2.96	2.96	2.96	2.96	2.96	-	-	2.96	2.96	2.96	2.96	2.96	1.56
	Freq. Adj.	1.01		SLOCA		2.96	2.96	2.96	2.96	2.96	-	-	2.96	2.96	2.96	2.96	2.96	1.56
Aux. Bldg. Penetration Room Coolers	HP/KW/KVA	30	13	LOOP	MANUAL	22.09	22.09	22.09	22.09	22.09	DSGL15A	DSGL15B	22.09	22.09	22.09	22.09	22.09	30.15
				MSLB	12 / 12	22.09	22.09	22.09	22.09	22.09	NG001B	NG002B	22.09	22.09	22.09	22.09	22.09	30.15
	Brake HP	25		LOCA		22.09	22.09	22.09	22.09	22.09	-	-	22.09	22.09	22.09	22.09	22.09	30.15
	Freq. Adj.	1.0303		SLOCA		22.09	22.09	22.09	22.09	22.09	-	-	22.09	22.09	22.09	22.09	22.09	30.15
Emerg. Exhaust Heating Coils	HP/KW/KVA	37	14	LOOP	MANUAL	0	0	0	0	0	EGG10A	EGG10B	0	0	0	0	0	0
				MSLB	12 / 12	37.00	37.00	37.00	37.00	37.00	NG003C	NG004C	37.00	37.00	37.00	37.00	37.00	0
	Brake HP	N/A		LOCA		37.00	37.00	37.00	37.00	37.00	-	-	37.00	37.00	37.00	37.00	37.00	0
	Freq. Adj.	1		SLOCA		37.00	37.00	37.00	37.00	37.00	-	-	37.00	37.00	37.00	37.00	37.00	0
Emerg. Exhaust Fans	HP/KW/KVA	25	13	LOOP	MANUAL	0	0	0	0	0	DCGG02A	DCGG02B	0	0	0	0	0	0
				MSLB	12 / 12	20.45	20.45	20.45	20.45	20.45	NG003C	NG002B	20.45	20.45	20.45	20.45	20.45	21.16
	Brake HP	24.0		LOCA		20.45	20.45	20.45	20.45	20.45	-	-	20.45	20.45	20.45	20.45	20.45	21.16
	Freq. Adj.	1.0303		SLOCA		20.45	20.45	20.45	20.45	20.45	-	-	20.45	20.45	20.45	20.45	20.45	21.16

SAFETY-RELATED LOADS

LOAD DESCRIPTION	NAMEPLATE LOAD RATING		REFER NOTES	ACCIDENT TYPE [1]	TIME TO START (SEC) [2]	NE001 KW LOADING [3] < 30 MIN. [4]	NE001 30 MIN. - 2 HRS [5]	NE001 2 HRS - 24 HRS [5]	NE001 24 HRS - 7 DAYS [5]	NE001 > 7 DAYS [6]	EQUIPMENT NO. / BUS NUMBER / LOAD SHED - SIS [7] / LOAD SHED - LOOP [7]		NE002 KW LOADING [3] < 30 MIN. [4]	NE002 30 MIN. - 2 HRS [5]	NE002 2 HRS - 24 HRS [5]	NE002 24 HRS - 7 DAYS [5]	NE002 > 7 DAYS [6]	WORST CASE KVAR LOADING [8]
Control Room Filtration Fans	HP/KW/KVA	5	13	LOOP	MANUAL	0	0	0	0	0	DCGK03A	DCGK03B	0	0	0	0	0	0
				MSLB	12 / 12	4.04	4.04	4.04	4.04	4.04	NG003C	NG004C	4.04	4.04	4.04	4.04	4.04	4.38
	Brake HP	4.15		LOCA		4.04	4.04	4.04	4.04	4.04	-	-	4.04	4.04	4.04	4.04	4.04	4.38
	Freq. Adj.	1.0303		SLOCA		4.04	4.04	4.04	4.04	4.04	-	-	4.04	4.04	4.04	4.04	4.04	4.38
Control Room A/C Compressors	HP/KW/KVA	40		LOOP	42 / 42	38.50	38.50	38.50	38.50	38.50	DSGK04AA	DSGK04BA	38.50	38.50	38.50	38.50	38.50	23.86
				MSLB		38.50	38.50	38.50	38.50	38.50	NG001	NG002	38.50	38.50	38.50	38.50	38.50	23.86
	Brake HP	N/A		LOCA		38.50	38.50	38.50	38.50	38.50	-	-	38.50	38.50	38.50	38.50	38.50	23.86
	Freq. Adj.	1.01		SLOCA		38.50	38.50	38.50	38.50	38.50	-	-	38.50	38.50	38.50	38.50	38.50	23.86
Control Room A/C Fans	HP/KW/KVA	40		LOOP	42 / 42	22.86	22.86	22.86	22.86	22.86	DSGK04AB	DSGK04BB	22.86	22.86	22.86	22.86	22.86	17.74
				MSLB		22.86	22.86	22.86	22.86	22.86	NG001	NG002	22.86	22.86	22.86	22.86	22.86	17.74
	Brake HP	27.4		LOCA		22.86	22.86	22.86	22.86	22.86	-	-	22.86	22.86	22.86	22.86	22.86	17.74
	Freq. Adj.	1.0303		SLOCA		22.86	22.86	22.86	22.86	22.86	-	-	22.86	22.86	22.86	22.86	22.86	17.74
Class 1E Equipment A/C Compressors	HP/KW/KVA	35	26	LOOP	42 / 42	28.20	28.20	28.20	28.20	28.20	DSGK05AA	DSGK05BA	28.20	28.20	28.20	28.20	28.20	17.48
				MSLB		28.20	28.20	28.20	28.20	28.20	NG001A	NG002A	28.20	28.20	28.20	28.20	28.20	17.48
	Brake HP	N/A		LOCA		28.20	28.20	28.20	28.20	28.20	-	-	28.20	28.20	28.20	28.20	28.20	17.48
	Freq. Adj.	1.01		SLOCA		28.20	28.20	28.20	28.20	28.20	-	-	28.20	28.20	28.20	28.20	28.20	17.48
Class 1E Equipment A/C Fans	HP/KW/KVA	15		LOOP	42 / 42	8.12	8.12	8.12	8.12	8.12	DSGK05AB	DSGK05BB	8.12	8.12	8.12	8.12	8.12	6.97
				MSLB		8.12	8.12	8.12	8.12	8.12	NG001A	NG002A	8.12	8.12	8.12	8.12	8.12	6.97
	Brake HP	9.65		LOCA		8.12	8.12	8.12	8.12	8.12	-	-	8.12	8.12	8.12	8.12	8.12	6.97
	Freq. Adj.	1.0303		SLOCA		8.12	8.12	8.12	8.12	8.12	-	-	8.12	8.12	8.12	8.12	8.12	6.97
Diesel Generator Bldg. Supply Fans	HP/KW/KVA	100		LOOP	12 / 12	72.31	72.31	72.31	72.31	72.31	DCGM01A	DCGM01B	72.31	72.31	72.31	72.31	72.31	93.45
				MSLB		72.31	72.31	72.31	72.31	72.31	NG003	NG004	72.31	72.31	72.31	72.31	72.31	93.45
	Brake HP	86.5		LOCA		72.31	72.31	72.31	72.31	72.31	-	-	72.31	72.31	72.31	72.31	72.31	93.45
	Freq. Adj.	1.0303		SLOCA		72.31	72.31	72.31	72.31	72.31	-	-	72.31	72.31	72.31	72.31	72.31	93.45
EDG Lube Oil / Keep Warm Pumps	HP/KW/KVA	20		LOOP	12 / 12	16.02	16.02	16.02	16.02	16.02	DPKJ03A	DPKJ03B	16.02	16.02	16.02	16.02	16.02	10.43
				MSLB		16.02	16.02	16.02	16.02	16.02	NG003D	NG004D	16.02	16.02	16.02	16.02	16.02	10.43
	Brake HP	-		LOCA		16.02	16.02	16.02	16.02	16.02	-	-	16.02	16.02	16.02	16.02	16.02	10.43
	Freq. Adj.	1.0303		SLOCA		16.02	16.02	16.02	16.02	16.02	-	-	16.02	16.02	16.02	16.02	16.02	10.43
EDG Rocker Arm Pre-Lube Pumps	HP/KW/KVA	0.5		LOOP	12 / 12	0.51	0.51	0.51	0.51	0.51	DPKJ02A	DPKJ02B	0.51	0.51	0.51	0.51	0.51	1.04
				MSLB		0.51	0.51	0.51	0.51	0.51	NG003D	NG004D	0.51	0.51	0.51	0.51	0.51	1.04
	Brake HP	0.5		LOCA		0.51	0.51	0.51	0.51	0.51	-	-	0.51	0.51	0.51	0.51	0.51	1.04
	Freq. Adj.	1.0303		SLOCA		0.51	0.51	0.51	0.51	0.51	-	-	0.51	0.51	0.51	0.51	0.51	1.04
Emergency Fuel Oil Transfer Pumps	HP/KW/KVA	2.5	15	LOOP	12 / 12	1.80	1.80	1.80	1.80	1.80	DPJE01A	DPJE01B	1.80	1.80	1.80	1.80	1.80	1.35
				MSLB		1.80	1.80	1.80	1.80	1.80	NG003D	NG004D	1.80	1.80	1.80	1.80	1.80	1.35
	Brake HP	N/A		LOCA		1.80	1.80	1.80	1.80	1.80	-	-	1.80	1.80	1.80	1.80	1.80	1.35
	Freq. Adj.	1.0303		SLOCA		1.80	1.80	1.80	1.80	1.80	-	-	1.80	1.80	1.80	1.80	1.80	1.35
Fuel Pool Pump Room Coolers	HP/KW/KVA	3	16	LOOP	MANUAL	0	2.44	2.44	2.44	2.44	DSGG04A	DSGG04B	0	2.44	2.44	2.44	2.44	2.82
				MSLB		0	2.44	2.44	2.44	2.44	NG003C	NG004C	0	2.44	2.44	2.44	2.44	2.82
	Brake HP	2.55		LOCA		0	2.44	2.44	2.44	2.44	-	-	0	2.44	2.44	2.44	2.44	2.82
	Freq. Adj.	1.0303		SLOCA		0	2.44	2.44	2.44	2.44	-	-	0	2.44	2.44	2.44	2.44	2.82
Spent Fuel Pool Cooling Pumps	HP/KW/KVA	150		LOOP	MANUAL	0	98.90	98.90	98.90	98.90	DPEC01A	DPEC01B	0	98.90	98.90	98.90	98.90	71.13
				MSLB		0	98.90	98.90	98.90	98.90	NG001	NG002	0	98.90	98.90	98.90	98.90	71.13
	Brake HP	124		LOCA		0	98.90	98.90	98.90	98.90	UV1A	UV2A	0	98.90	98.90	98.90	98.90	71.13
	Freq. Adj.	1.0303		SLOCA		0	98.90	98.90	98.90	98.90	-	-	0	98.90	98.90	98.90	98.90	71.13
Aux. Feed Water Pump Room Coolers	HP/KW/KVA	10		LOOP	42 / 42	8.51	8.51	8.51	8.51	8.51	SGF02A	SGF02B	8.51	8.51	8.51	8.51	8.51	13.99
				MSLB		8.51	8.51	8.51	8.51	8.51	NG001B	NG004C	8.51	8.51	8.51	8.51	8.51	13.99
	Brake HP	9.1		LOCA		8.51	8.51	8.51	8.51	8.51	-	-	8.51	8.51	8.51	8.51	8.51	13.99
	Freq. Adj.	1.0303		SLOCA		8.51	8.51	8.51	8.51	8.51	-	-	8.51	8.51	8.51	8.51	8.51	13.99
Centrifugal Charging Pump Room Coolers	HP/KW/KVA	10	16	LOOP	12 / 12	9.17	9.17	9.17	9.17	9.17	DSGL12A	DSGL12B	9.17	9.17	9.17	9.17	9.17	15.06
				MSLB		9.17	9.17	9.17	9.17	9.17	NG001A	NG002A	9.17	9.17	9.17	9.17	9.17	15.06
	Brake HP	9.8		LOCA		9.17	9.17	9.17	9.17	9.17	-	-	9.17	9.17	9.17	9.17	9.17	15.06
	Freq. Adj.	1.0303		SLOCA		9.17	9.17	9.17	9.17	9.17	-	-	9.17	9.17	9.17	9.17	9.17	15.06
Safety Injection Pump Room Coolers	HP/KW/KVA	10	16	LOOP	N/A	0	0	0	0	0	DSGL09A	DSGL09B	0	0	0	0	0	0
				MSLB	17 / 17	7.49	7.49	7.49	7.49	7.49	NG001A	NG002A	7.49	7.49	7.49	7.49	7.49	15.28
	Brake HP	7.6		LOCA		7.49	7.49	7.49	7.49	7.49	-	-	7.49	7.49	7.49	7.49	7.49	15.28
	Freq. Adj.	1.0303		SLOCA		7.49	7.49	7.49	7.49	7.49	-	-	7.49	7.49	7.49	7.49	7.49	15.28
Comp. Cooling Water Pump Room Coolers	HP/KW/KVA	15	16	LOOP	17 / 17	9.13	9.13	9.13	9.13	9.13	DSGL11A	DSGL11B	9.13	9.13	9.13	9.13	9.13	11.87
				MSLB		9.13	9.13	9.13	9.13	9.13	NG003C	NG004C	9.13	9.13	9.13	9.13	9.13	11.87
	Brake HP	10.4		LOCA		9.13	9.13	9.13	9.13	9.13	-	-	9.13	9.13	9.13	9.13	9.13	11.87
	Freq. Adj.	1.0303		SLOCA		9.13	9.13	9.13	9.13	9.13	-	-	9.13	9.13	9.13	9.13	9.13	11.87
Residual Heat Removal Pump Room Coolers	HP/KW/KVA	10	16	LOOP	MANUAL	0	7.49	7.49	7.49	7.49	DSGL10A	DSGL10B	0	7.49	7.49	7.49	7.49	15.28
				MSLB	22 / 22	7.49	7.49	7.49	7.49	7.49	NG001A	NG002A	7.49	7.49	7.49	7.49	7.49	15.28
	Brake HP	7.6		LOCA		7.49	7.49	7.49	7.49	7.49	-	-	7.49	7.49	7.49	7.49	7.49	15.28
	Freq. Adj.	1.0303		SLOCA		7.49	7.49	7.49	7.49	7.49	-	-	7.49	7.49	7.49	7.49	7.49	15.28
Containment Spray Pump Room Coolers	HP/KW/KVA	10	16	LOOP	N/A	0	0	0	0	0	DSGL13A	DSGL13B	0	0	0	0	0	0
				MSLB	27 / 27	7.49	7.49	7.49	7.49	0	NG001A	NG002A	7.49	7.49	7.49	7.49	0	15.28
	Brake HP	7.6		LOCA		7.49	7.49	7.49	7.49	0	-	-	7.49	7.49	7.49	7.49	0	15.28
	Freq. Adj.	1.0303		SLOCA		0	0	0	0	0	-	-	0	0	0	0	0	0
ESW Pump House Supply Fans	HP/KW/KVA	20	16	LOOP	32 / 37	14.45	14.45	14.45	14.45	14.45	DCGD01A	DCGD01B	14.45	14.45	14.45	14.45	14.45	10.42
				MSLB		14.45	14.45	14.45	14.45	14.45	NG005E	NG006E	14.45	14.45	14.45	14.45	14.45	10.42
	Brake HP	17.34		LOCA		14.45	14.45	14.45	14.45	14.45	-	-	14.45	14.45	14.45	14.45	14.45	10.42
	Freq. Adj.	1.0303		SLOCA		14.45	14.45	14.45	14.45	14.45	-	-	14.45	14.45	14.45	14.45	14.45	10.42
Control Room Pressurization System Heaters	HP/KW/KVA	5	14	LOOP	MANUAL	0	0	0	0	0	FGK02A	FGK02B	0	0	0	0	0	0
				MSLB	12 / 12	5.00	5.00	5.00	5.00	5.00	NG001A	NG002A	5.00	5.00	5.00	5.00	5.00	0
	Brake HP	N/A		LOCA		5.00	5.00	5.00	5.00	5.00	-	-	5.00	5.00	5.00	5.00	5.00	0
	Freq. Adj.	1		SLOCA		5.00	5.00	5.00	5.00	5.00	-	-	5.00	5.00	5.00	5.00	5.00	0
Control Room Pressurization System Fans	HP/KW/KVA	7.5	13	LOOP	MANUAL	0	0	0	0	0	DCGK04A	DCGK04B	0	0	0	0	0	0
				MSLB	12 / 12	3.74	3.74	3.74	3.74	3.74	NG001A	NG002A	3.74	3.74	3.74	3.74	3.74	1.96
	Brake HP	4.2		LOCA		3.74	3.74	3.74	3.74	3.74	-	-	3.74	3.74	3.74	3.74	3.74	1.96
	Freq. Adj.	1.0303		SLOCA		3.74	3.74	3.74	3.74	3.74	-	-	3.74	3.74	3.74	3.74	3.74	1.96
ESW Strainers	HP/KW/KVA	1.3	15	LOOP	152 / 157	1.69	1.69	1.69	1.69	1.69	DFEF02A	DFEF02B	1.69	1.69	1.69	1.69	1.69	1.05
				MSLB		1.69	1.69	1.69	1.69	1.69	NG005E	NG006E	1.69	1.69	1.69	1.69	1.69	1.05
	Brake HP	1.3		LOCA		1.69	1.69	1.69	1.69	1.69	-	-	1.69	1.69	1.69	1.69	1.69	1.05
	Freq. Adj.	1.01		SLOCA		1.69	1.69	1.69	1.69	1.69	-	-	1.69	1.69	1.69	1.69	1.69	1.05
480/120V NN Inverter BCTV	HP/KW/KVA	7.5	24	LOOP	12 / 12	10.36	10.36	10.36	10.36	10.36	NN11/NN13	NN12/NN14	10.27	10.27	10.27	10.27	10.27	5.49
				MSLB		10.36	10.36	10.36	10.36	10.36	NG001A	NG002A	10.27	10.27	10.27	10.27	10.27	5.49
	Brake HP	N/A		LOCA		10.36	10.36	10.36	10.36	10.36	-	-	10.27	10.27	10.27	10.27	10.27	5.49
	Freq. Adj.	1		SLOCA		10.36	10.36	10.36	10.36	10.36	-	-	10.27	10.27	10.27	10.27	10.27	5.49
TOTAL SAFETY RELATED LOADS:				LOOP		3684.8	4109.5	4109.5	4109.5	4109.5	PF:	85.9%	3682.7	4109.6	4109.6	4109.6	4109.6	2445.0
				MSLB		4787.7	4849.4	4061.3	4038.8	4213.4	PF:	84.7%	4785.5	4849.5	4061.3	4038.9	4213.5	3037.4
				LOCA		4936.4	5006.7	5006.7	4395.7	4388.2	PF:	85.3%	4934.2	5006.7	5006.7	4395.7	4388.2	3057.0
				SLOCA		4376.1	4446.4	4388.2	4388.2	4388.2	PF:	84.1%	4373.9	4446.4	4388.2	4388.2	4388.2	2855.7

NON-SAFETY RELATED LOADS

LOAD DESCRIPTION	NAMEPLATE LOAD RATING		REFER NOTES	ACCIDENT TYPE [1]	TIME TO START (SEC) [2]	NE001 KW LOADING [3] < 30 MIN. [4]	NE001 30 MIN. - 2 HRS [5]	NE001 2 HRS - 24 HRS [5]	NE001 24 HRS - 7 DAYS [5]	NE001 > 7 DAYS [6]	EQUIPMENT NO. / BUS NUMBER / LOAD SHED - SIS [7] / LOAD SHED - LOOP [7]		NE002 KW LOADING [3] < 30 MIN. [4]	NE002 30 MIN. - 2 HRS [5]	NE002 2 HRS - 24 HRS [5]	NE002 24 HRS - 7 DAYS [5]	NE002 > 7 DAYS [6]	WORST CASE KVAR LOADING [8]
Instrument Air Compressors [25]	HP/KW/KVA	250		LOOP	MANUAL	193.10	193.10	193.10	193.10	193.10	DCKA01A	DCKA01B	193.10	193.10	193.10	193.10	193.10	129.76
				MSLB		193.10	193.10	193.10	193.10	193.10	NG003	NG004	193.10	193.10	193.10	193.10	193.10	129.76
	Brake HP	250		LOCA		193.10	193.10	193.10	193.10	193.10	S-1	S-2	193.10	193.10	193.10	193.10	193.10	129.76
	Freq. Adj.	1.01		SLOCA		193.10	193.10	193.10	193.10	193.10	UV1B	UV2B	193.10	193.10	193.10	193.10	193.10	129.76
CRDM Cooling Fans	HP/KW/KVA	34.5		LOOP	MANUAL	0	23.31	23.31	23.31	23.31	DCGN01D	DCGN01B	0	23.31	23.31	23.31	23.31	12.01
				MSLB		0	23.31	23.31	23.31	23.31	NG001B	NG002B	0	23.31	23.31	23.31	23.31	12.01
	Brake HP	29.1		LOCA		0	0	0	0	0	S-1	S-2	0	0	0	0	0	0
	Freq. Adj.	1.0303		SLOCA		0	0	0	0	0	-	-	0	0	0	0	0	0
Boric Acid Transfer Pumps	HP/KW/KVA	15.5		LOOP	MANUAL 30 MIN.	0	11.60	11.60	11.60	11.60	DPBG02A	DPBG02B	0	11.60	11.60	11.60	11.60	7.01
				MSLB		0	11.60	11.60	11.60	11.60	NG001A	NG002A	0	11.60	11.60	11.60	11.60	7.01
	Brake HP	-		LOCA		0	11.60	11.60	11.60	11.60	S-1	S-2	0	11.60	11.60	11.60	11.60	7.01
	Freq. Adj.	1.0303		SLOCA		0	11.60	11.60	11.60	11.60	-	-	0	11.60	11.60	11.60	11.60	7.01
Back Up Pressurizer Heaters	HP/KW/KVA	692		LOOP	MANUAL 60 MIN.	0	692.40	692.40	692.40	0	TBB03	TBB03	0	692.40	692.40	692.40	0	0
				MSLB		0	692.40	692.40	692.40	0	PG021	PG022	0	692.40	692.40	692.40	0	0
	Brake HP	-		LOCA		0	0	0	0	0	S-1	S-2	0	0	0	0	0	0
	Freq. Adj.	1		SLOCA		0	692.40	692.40	692.40	0	UV1B	UV2B	0	692.40	692.40	692.40	0	0
Standby AC Lighting	HP/KW/KVA	75		LOOP	12 / 12	46.25	46.25	46.25	46.25	46.25	-	-	56.01	56.01	56.01	56.01	56.01	0
				MSLB	MANUAL	0	46.25	46.25	46.25	46.25	MCC	MCC	0	56.01	56.01	56.01	56.01	0
	Brake HP	-		LOCA		0	46.25	46.25	46.25	46.25	S-1	S-2	0	56.01	56.01	56.01	56.01	0
	Freq. Adj.	1		SLOCA		0	46.25	46.25	46.25	46.25	-	-	0	56.01	56.01	56.01	56.01	0
Non-Class 1E Instrument AC Power	HP/KW/KVA	30		LOOP	12 / 12	21.60	21.60	21.60	21.60	21.60	XPN07A	XPN08A	21.60	21.60	21.60	21.60	21.60	10.46
				MSLB		21.60	21.60	21.60	21.60	21.60	NG001B	NG002B	21.60	21.60	21.60	21.60	21.60	10.46
	Brake HP	N/A		LOCA		21.60	21.60	21.60	21.60	21.60	-	-	21.60	21.60	21.60	21.60	21.60	10.46
	Freq. Adj.	1		SLOCA		21.60	21.60	21.60	21.60	21.60	-	-	21.60	21.60	21.60	21.60	21.60	10.46
125 Volt Battery Chargers	HP/KW/KVA	39		LOOP	MANUAL 2 HR.	0	46.47	46.47	46.47	46.47	PK021	PK022	0	46.47	46.47	46.47	46.47	44.79
				MSLB		0	46.47	46.47	46.47	46.47	NG001	NG004	0	46.47	46.47	46.47	46.47	44.79
	Brake HP	N/A		LOCA		0	46.47	46.47	46.47	46.47	S-1	S-2	0	46.47	46.47	46.47	46.47	44.79
	Freq. Adj.	1		SLOCA		0	46.47	46.47	46.47	46.47	UV1B	UV2B	0	46.47	46.47	46.47	46.47	44.79
125 Volt Battery Chargers	HP/KW/KVA	39		LOOP	MANUAL 2 HR.	0	46.47	46.47	46.47	46.47	PK023	PK024	0	46.47	46.47	46.47	46.47	44.79
				MSLB		0	46.47	46.47	46.47	46.47	NG001	NG004	0	46.47	46.47	46.47	46.47	44.79
	Brake HP	N/A		LOCA		0	46.47	46.47	46.47	46.47	S-1	S-2	0	46.47	46.47	46.47	46.47	44.79
	Freq. Adj.	1		SLOCA		0	46.47	46.47	46.47	46.47	UV1B	UV2B	0	46.47	46.47	46.47	46.47	44.79
250 Volt Battery Charger	HP/KW/KVA	52		LOOP	MANUAL 2 HR.						NOTE 17	PJ031	0	61.95	61.95	61.95	61.95	59.72
				MSLB								NG002	0	61.95	61.95	61.95	61.95	59.72
	Brake HP	-		LOCA								S-2	0	61.95	61.95	61.95	61.95	59.72
	Freq. Adj.	1		SLOCA								UV2B	0	61.95	61.95	61.95	61.95	59.72
ESW Pumphouse Heaters	HP/KW/KVA	25	15, 18	LOOP	12 / 12	25.00	25.00	25.00	25.00	25.00	EGD01A	EGD01B	25.00	25.00	25.00	25.00	25.00	0
				MSLB	MANUAL	0	25.00	25.00	25.00	25.00	NG005E	NG006E	0	25.00	25.00	25.00	25.00	0
	Brake HP	N/A		LOCA		0	25.00	25.00	25.00	25.00	S-1	S-2	0	25.00	25.00	25.00	25.00	0
	Freq. Adj.	1		SLOCA		0	25.00	25.00	25.00	25.00	-	-	0	25.00	25.00	25.00	25.00	0
ESW Pumphouse Heaters	HP/KW/KVA	15	15, 18	LOOP	12 / 12	15.00	15.00	15.00	15.00	15.00	EGD01C	EGD01D	15.00	15.00	15.00	15.00	15.00	0
				MSLB	MANUAL	0	15.00	15.00	15.00	15.00	NG005E	NG006E	0	15.00	15.00	15.00	15.00	0
	Brake HP	N/A		LOCA		0	15.00	15.00	15.00	15.00	S-1	S-2	0	15.00	15.00	15.00	15.00	0
	Freq. Adj.	1		SLOCA		0	15.00	15.00	15.00	15.00	-	-	0	15.00	15.00	15.00	15.00	0
ESW Pumphouse Heaters	HP/KW/KVA	15	15, 18	LOOP	12 / 12	15.00	15.00	15.00	15.00	15.00	EGD01E	EGD01F	15.00	15.00	15.00	15.00	15.00	0
				MSLB	MANUAL	0	15.00	15.00	15.00	15.00	NG005E	NG006E	0	15.00	15.00	15.00	15.00	0
	Brake HP	N/A		LOCA		0	15.00	15.00	15.00	15.00	S-1	S-2	0	15.00	15.00	15.00	15.00	0
	Freq. Adj.	1		SLOCA		0	15.00	15.00	15.00	15.00	-	-	0	15.00	15.00	15.00	15.00	0
ESW Pumphouse Heaters	HP/KW/KVA	15	15, 18	LOOP	12 / 12	15.00	15.00	15.00	15.00	15.00	EGD01G	EGD01H	15.00	15.00	15.00	15.00	15.00	0
				MSLB	MANUAL	0	15.00	15.00	15.00	15.00	NG005E	NG006E	0	15.00	15.00	15.00	15.00	0
	Brake HP	N/A		LOCA		0	15.00	15.00	15.00	15.00	S-1	S-2	0	15.00	15.00	15.00	15.00	0
	Freq. Adj.	1		SLOCA		0	15.00	15.00	15.00	15.00	-	-	0	15.00	15.00	15.00	15.00	0
Count Lab Analyzers	HP/KW/KVA	9.6		LOOP	MANUAL	8.64	8.64	8.64	8.64	8.64	XSJ01	-	0	0	0	0	0	4.18
				MSLB		8.64	8.64	8.64	8.64	8.64	NG001	-	0	0	0	0	0	4.18
	Brake HP	N/A		LOCA		8.64	8.64	8.64	8.64	8.64	S-1	-	0	0	0	0	0	4.18
	Freq. Adj.	1		SLOCA		8.64	8.64	8.64	8.64	8.64	-	-	0	0	0	0	0	4.18
TOTAL NON-SAFETY RELATED LOADS:				LOOP		339.6	1159.8	1159.8	1159.8	467.4	PF:	96.9%	340.7	1222.9	1222.9	1222.9	530.5	312.7
				MSLB		223.3	1159.8	1159.8	1159.8	467.4	PF:	96.9%	214.7	1222.9	1222.9	1222.9	530.5	312.7
				LOCA		223.3	444.1	444.1	444.1	444.1	PF:	96.9%	214.7	507.2	507.2	507.2	507.2	300.7
				SLOCA		223.3	1136.5	1136.5	1136.5	444.1	PF:	86.0%	214.7	1199.6	1199.6	1199.6	507.2	300.7
TOTAL AUTO-CONNECTED LOADS:[20]				LOOP		3809.2	3743.5	3743.5	3743.5	3743.5	PF:	86.9%	3808.2	3744.7	3744.7	3744.7	3744.7	2173.1
				MSLB		4809.3	4769.7	3981.6	3959.1	4133.7	PF:	85.1%	4807.1	4769.7	3981.6	3959.1	4133.7	2973.9
				LOCA		**4958.0**	**4918.4**	**4918.4**	**4307.4**	**4299.9**	PF:	85.7%	**4955.8**	**4918.4**	**4918.4**	**4307.4**	**4300.0**	**2986.6**
				SLOCA		4397.7	4358.1	4299.9	4299.9	4299.9	PF:	84.5%	4395.5	4358.2	4300.0	4300.0	4300.0	2785.3
TOTAL LOAD ON DIESEL GENERATOR:[21]				LOOP		4024.4	5269.4	5269.4	5269.4	4577.0	PF:	88.8%	4023.4	5332.5	5332.5	5332.5	4640.1	2757.7
				MSLB		5011.0	**6009.3**	5221.1	5198.7	4680.9	PF:	87.6%	5000.2	**6072.4**	5284.2	5261.8	4744.0	3350.1
				LOCA		**5159.7**	5450.8	**5450.8**	4839.8	**4832.3**	PF:	85.4%	**5148.9**	5513.9	**5513.9**	4902.9	**4895.4**	**3357.7**
				SLOCA		4599.4	5582.9	5524.7	**5524.7**	4832.3	PF:	87.3%	4588.6	5646.0	5587.8	**5587.8**	4895.4	3156.4
TOTAL LOAD ON DIESEL GENERATOR:[21, 22] (Frequency Adjusted)				LOOP		4131.1	5391.3	5391.3	5391.3	4698.9	PF:	88.8%	4130.0	5454.4	5454.4	5454.4	4762.0	2828.1
				MSLB		5150.1	**6152.6**	5340.6	5317.5	4804.7	PF:	87.5%	5139.3	6215.7	5403.7	5380.6	4867.8	3438.5
				LOCA		**5303.3**	5597.9	5597.9	4968.4	**4960.7**	PF:	85.4%	5292.5	5661.0	5661.0	5031.5	5023.8	3446.1
				SLOCA		4726.1	5713.1	**5653.1**	**5653.1**	4960.7	PF:	87.2%	4715.2	5776.2	5716.2	5716.2	5023.8	3238.7
TOTAL LOAD ON DIESEL GENERATOR:[21, 22,] (Frequency Adjusted, with Cable Losses)				LOOP		4172.4	5445.2	5445.2	5445.2	4745.9	PF:	89.0%	4171.3	5509.0	5509.0	5509.0	4809.6	2828.1
				MSLB		5201.6	**6214.1**	5394.0	5370.6	4852.7	PF:	87.7%	5190.6	**6277.9**	5457.7	5434.4	4916.5	3438.5
				LOCA		**5356.3**	5653.9	**5653.9**	5018.1	**5010.3**	PF:	85.6%	**5345.4**	5717.7	5717.7	5081.8	**5074.0**	**3446.1**
				SLOCA		4773.3	5770.2	5709.6	**5709.6**	5010.3	PF:	87.4%	4762.4	5834.0	**5773.4**	**5773.4**	5074.0	3238.7
ASSOCIATED DIESEL GENERATOR RATINGS:[4, 5, 6]						7441.0	6821.0	6821.0	6821.0	6201.0			7441.0	6821.0	6821.0	6821.0	6201.0	
PERCENT MARGIN FROM GENERATOR RATING:[21]						30.66	11.90	20.09	19.00	22.07			30.80	10.98	19.16	18.08	21.05	
PERCENT MARGIN AT OVER-FREQUENCY w/CABLE LOSSES:[22, 23]						28.02	8.90	17.11	16.29	19.20			28.16	7.96	15.36	15.36	18.17	

LEGEND

- Non-shaded cells denote loads that are automatically sequenced.
- Shaded cells denote loads that are manually loaded.
- Double-outlined cells denote maximum total load for each time period.
- Control cell to enter frequency for determining effect on loading.

NOTES

1 All Accident Types are evaluated concurrant with a Loss of Offsite Power (LOOP).

2 The start times shown include both 12 sec. for the Diesel to come up to speed and voltage after DG start signal and the time when the sequencer starts the load. In the event that a LOCA is present without bus undervoltage, 12 sec. must be subtracted from the start times shown.

3 All loads are determined from the load tables and notes on Drawing E-11005A.

4 0-30 minutes - This time period would cover when immediate/intermittent loads such as MOVs would be energized. The generator set rating for this time period is 7441 kW.

5 30 minutes to 7 days - This intermediate time period would cover Hot Standby operations during a LOOP, operations during a Main Steam Line Break (MSLB), and would also cover the injection and recirculation phases during a Large Break LOCA, or Small Break LOCA (SLOCA). The generator set rating for this time period is 6821 kW.

6 Greater than 7 days - This time period would cover cold shutdown operations during a LOOP, operations during a Main Steam Line Break (MSLB), and would also cover an extended recirculation phase during a LOCA or SLOCA. The generator set rating for this time period is 6201 kW.

7 "UV" signals shed both safety and non-safety related loads upon loss of voltage on D/G buses. The "S" signal originates within the Load Shedder-Sequencer Panel. This signal is a derivative of the safety injection signal (SIS) and serves to trip those non-1E loads connected to the Class 1E buses on the occurrence of an SIS.

8 Worst case KVAR loading for each component is obtained from the load tables of E-11005A.

9 Sequencer starts one of the two component cooling water pumps in each load group and 5 seconds later starts the 2nd (standby) pump in the same load group provided the first pump failed to start.

10 Containment Spray Pump starts at 27 secs if a CSAS is present at 27 sec. Containment Spray Pump starts at 52 secs if a CSAS is not present at 27 secs.

11 Not Used.

12 Power values shown for NK25/NK26 represent the charger with no DC output load. When the Swing Charger is switched into service, its load becomes that of the charger it replaced.

13 Starts automatically from an SIS/CRVIS/FBVIS signal.

14 Starting will be interlocked with its respective fan.

Starts and/or stops automatically by a signal from pressure, level, or temperature switch, or manually operated when required.

Starting of a pump room cooler will be interlocked with its respective pump motor breaker in the automatic mode.

The 250 Volt Battery Charger load applies only to NE002.

Under certain circumstances this load may be connected to the bus and since it is not shed, this load must be considered as starting at 12 sec.

The various Overall Power Factor (PF) values were determined by using the Overall Maximum KW Loading for each separate grouping of 10 cases (5 time periods x 2 EDGs) and the associated Total Worst-Case KVAR Loading.

-----(Note 19 is not referenced in the above Table.)-----

The "Total Auto-Connected Load" includes all loads that are automatically sequenced back on to the diesel generator, together with all loads that could be automatically re-energized. Auto-Connected Loads do not include manually initiated loads.

21 The Total Load is the sum of the Total Safety Related Loads and Total Non-Safety Related Loads. The maximum Total Load for each Time Period is indicated by double-outlined cells with bold-face type. The values in these cells are used to determine the associated Diesel Generator margins.

22 The operating frequency of the EDG is not maintained at an exact 60 Hz. During over-frequency conditions, EDG loading increases by the cube of the frequency due to pumps and fans and directly proportional to the frequency for constant torque loads. The EDG frequency will be maintained between 59.4 Hz and 60.6 Hz. The worst case EDG loading will be at a frequency of 60.6 Hz (60 x 1.01).

LOAD	FREQUENCY ADJUSTMENT FACTOR
Pump/Fan Loads (Frequency Cubed):	1.0303
Constant Torque Loads (Frequency Direct):	1.01
Constant Loads (No Change due to Frequency):	1.00

23 An additional 1% has been conservatively added to each Frequency Adjusted loading condition to account for the effects of cable losses.

24 One inverter is operating at No Load and one Inverter is operating at Full Load. The loading provided is the total loading for both Inverters

25 An alternate model motor is approved with slightly different ratings (either may be installed at any given time). Shown details pertain to the worst case motor. See E-11005A for additional motor details.

26 The loads included in the "TOTAL LOAD ON DIESEL GENERATOR (Frequency Adjusted, with Cable Losses)" for the LOOP loads "Medium Time" are the same loads allowed to be loaded on the PB SBO DG KU01A, KU01B and KU01C. All the loads are manually loaded and managed per Operations procedures.

USAR FIG. 8.3-2

DC7 10/26/2021

ESSENTIAL DRAWING		
☑ REVISED ☐ ISSUED	INCORP. CHG. DOC. CR 10007548	CHANGE PKG. NO.
REVISION NOTES		
WOLF CREEK NUCLEAR OPERATING CORPORATION		ELECTRONIC APPROVAL
LIST OF LOADS SUPPLIED BY EMERGENCY DIESEL GENERATOR		
SCALE: NONE	DRAWING NUMBER: E-11005	REV: 63

22 x 34 D SIZE

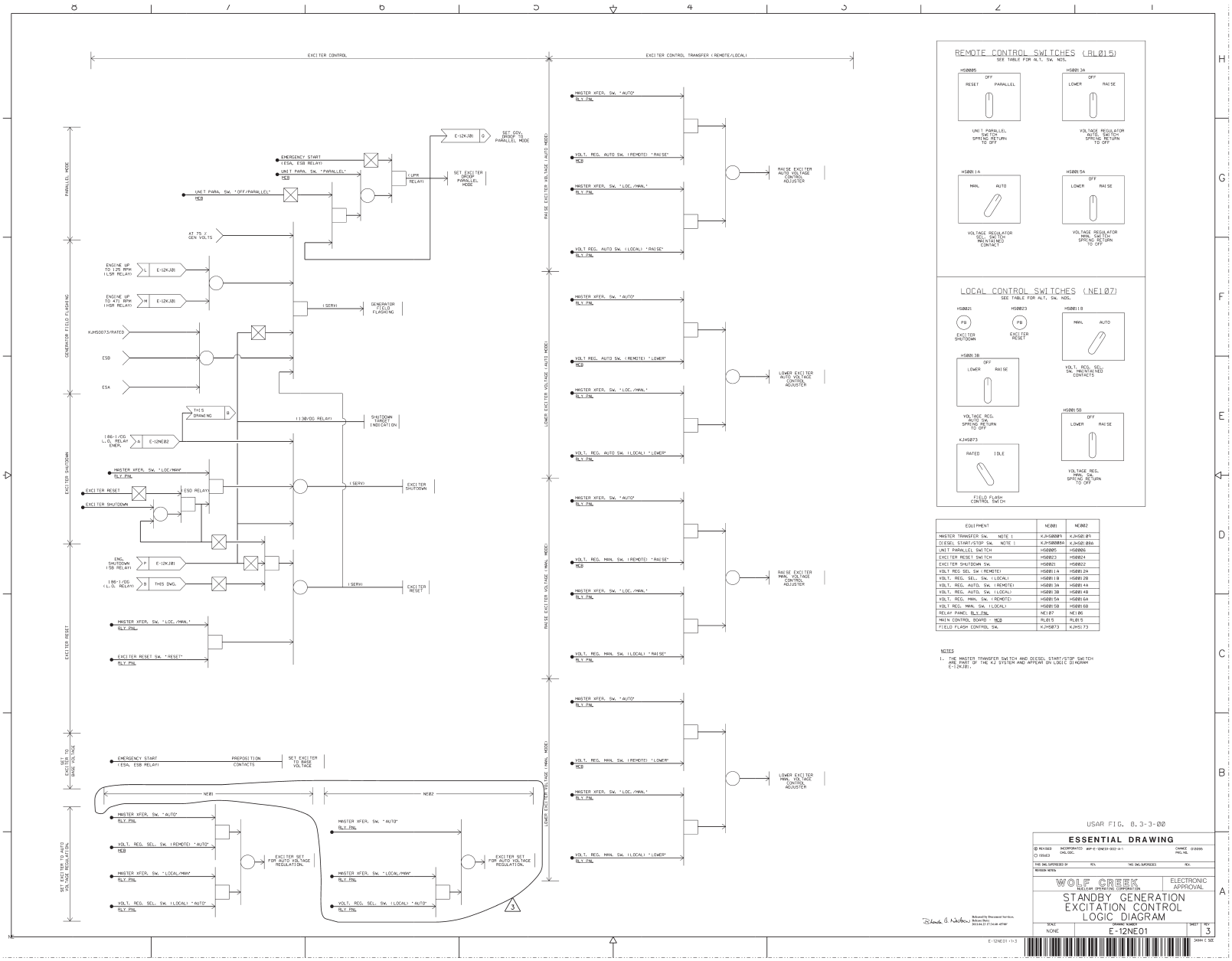

REMOTE CONTROL SWITCHES (RL015)

SEE TABLE FOR ALT. SW. NOS.

HS0005 — OFF / RESET / PARALLEL
UNIT PARALLEL SWITCH SPRING RETURN TO OFF

HS0013A — OFF / LOWER / RAISE
VOLTAGE REGULATOR AUTO. SWITCH SPRING RETURN TO OFF

HS0011A — MAN. / AUTO
VOLTAGE REGULATOR MAN./AUTO SELECTOR MAINTAINED CONTACT

HS0015A — OFF / LOWER / RAISE
VOLTAGE REGULATOR MAN. SW. SPRING RETURN TO OFF

LOCAL CONTROL SWITCHES (NE107)

SEE TABLE FOR ALT. SW. NOS.

HS0021 — PB — EXCITER SHUTDOWN

HS0023 — PB — EXCITER RESET

HS0011B — MAN. / AUTO
VOLT. REG. SEL. SW. MAINTAINED CONTACTS

HS0013B — OFF / LOWER / RAISE
VOLTAGE REG. AUTO SW. SPRING RETURN TO OFF

HS0015B — OFF / LOWER / RAISE
VOLTAGE REG. MAN. SW. SPRING RETURN TO OFF

KJHS073 — RATED / IDLE
FIELD FLASH CONTROL SWITCH

EQUIPMENT	NE001	NE002
MASTER TRANSFER SW. NOTE 1	KJHS0009	KJHS0189
DIESEL START/STOP SW. NOTE 1	KJHS0008A	KJHS0188
UNIT PARALLEL SWITCH	HS0005	HS0006
EXCITER RESET SWITCH	HS0023	HS0024
EXCITER SHUTDOWN SW.	HS0021	HS0022
VOLT REG SEL SW (REMOTE)	HS0011A	HS0011B
VOLT. REG. SEL. SW. (LOCAL)	HS0011B	HS0011B
VOLT. REG. AUTO. SW. (REMOTE)	HS0013A	HS0014A
VOLT. REG. AUTO. SW. (LOCAL)	HS0013B	HS0014B
VOLT. REG. MAN. SW. (REMOTE)	HS0015A	HS0016A
VOLT REG. MAN. SW. (LOCAL)	HS0015B	HS0016B
RELAY PANEL BLK. PNL	NE107	NE108
MAIN CONTROL BOARD - MCB	RL015	RL015
FIELD FLASH CONTROL SW.	KJHS073	KJHS073

NOTES:

1. THE MASTER TRANSFER SWITCH AND DIESEL START/STOP SWITCH ARE PART OF THE KJ SYSTEM AND APPEAR ON LOGIC DIAGRAM E-12KJ01.

USAR FIG. 8.3-3-00

ESSENTIAL DRAWING

REVISED — INCORPORATED WP-E-QNE01-002-A-1 — CHANGE 013085
1996/03 — CHG. DSC. — PKG. NO.

THIS DWG SUPERSEDES BY — REV. — THIS DWG.SUPERSEDES — REV.

REVISION NOTES

WOLF CREEK NUCLEAR OPERATING CORPORATION — ELECTRONIC APPROVAL

STANDBY GENERATION EXCITATION CONTROL LOGIC DIAGRAM

Released for Document Services. Release Date: 2024.06.27 17:44:49 -05'00'

SCALE	DRAWING NUMBER	SHEET	REV
NONE	E-12NE01		3

E-12NE01-1-3

24X44 E SIZE

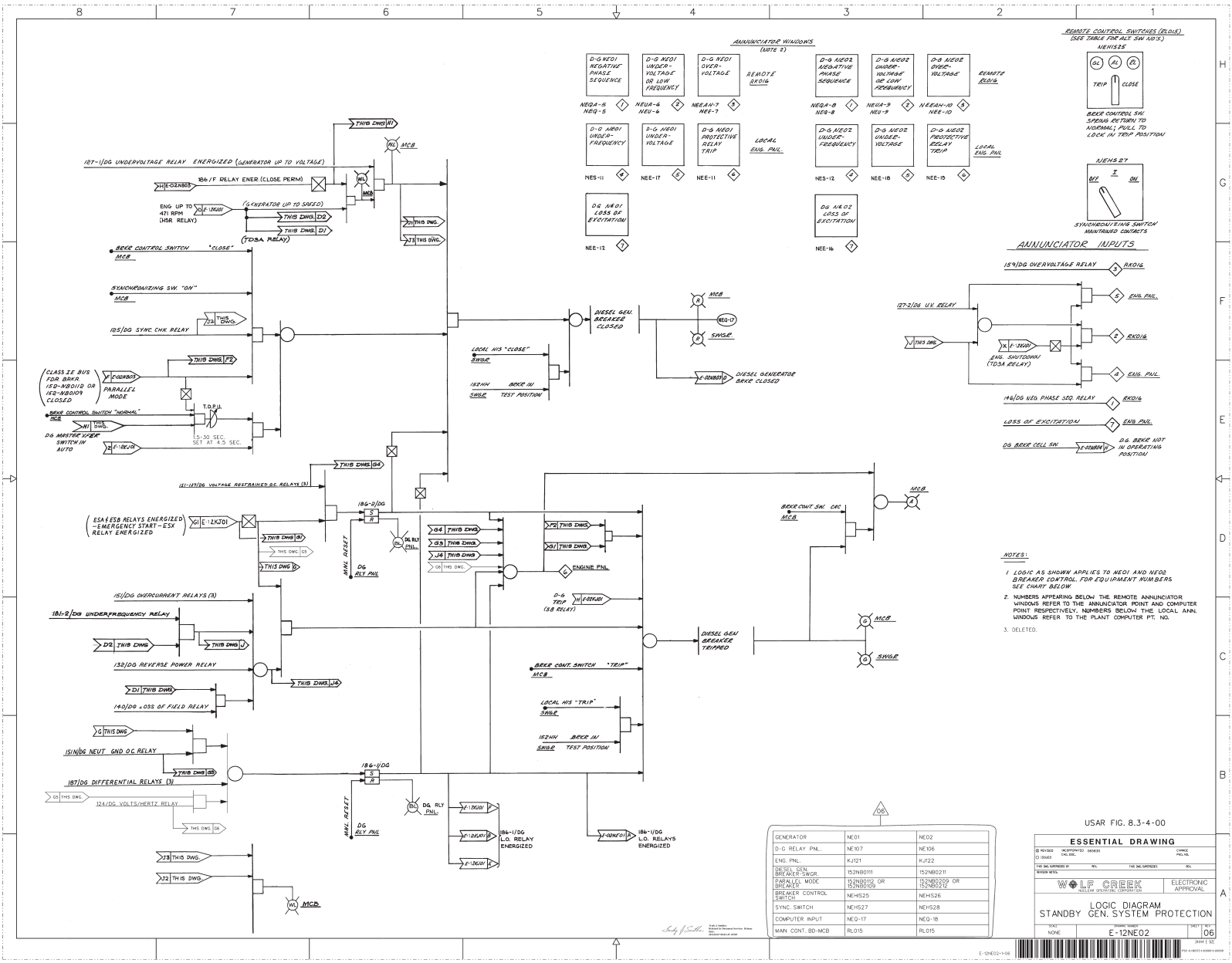

GENERATOR	NE01	NE02
D-G RELAY PNL.	NE107	NE106
ENG. PNL.	KJ121	KJ122
DIESEL GEN. BREAKER-SWGR.	152NB0111	152NB0211
PARALLEL MODE BREAKER	152NB0112 OR 152NB0109	152NB0212 OR 152NB0209
BREAKER CONTROL SWITCH	NEHS25	NEHS26
SYNC. SWITCH	NEHS27	NEHS28
COMPUTER INPUT	NEQ-17	NEQ-18
MAIN CONT. BD-MCB	RL015	RL015

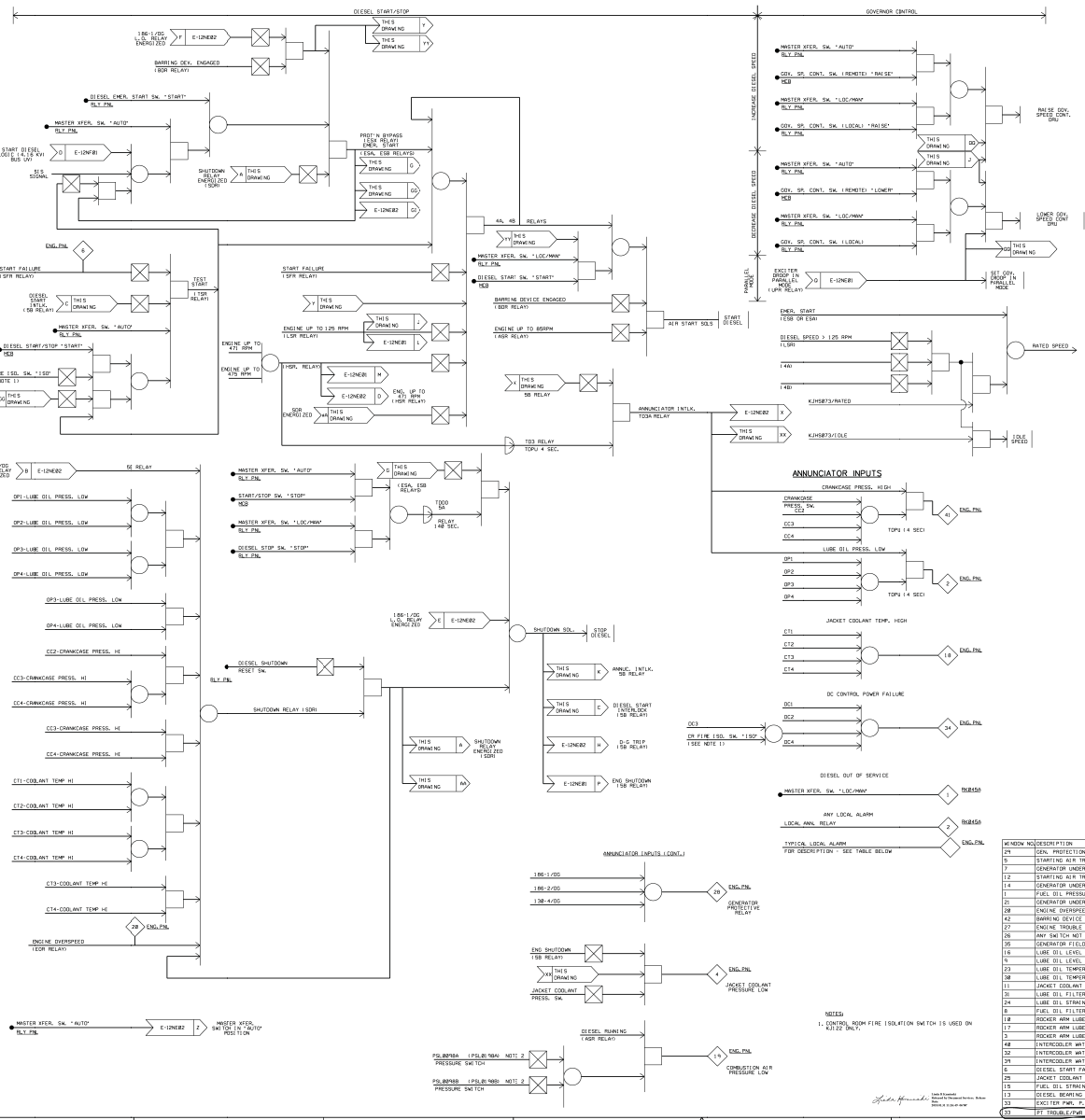

MAIN CONTROL BD CONTROL SWITCHES (RL015)

SEE TABLE FOR ALT. SW. NOS.

HS00086 — START-RESET / STOP — DIESEL START-RESET /STOP SW. MOMENTARY CONTACTS

HS00087A — OFF / LOWER / RAISE — GOVERNOR SPEED CONTROL SW. SPRING RETURN TO OFF

LOCAL CONTROL SWITCHES (NE107)

SEE TABLE FOR ALT. SW. NOS.

HS00081C — PB — DIESEL START SW. MOMENTARY CONTACTS

HS00081D — PB — EMERGENCY DIESEL START SW. MOMENTARY CONTACTS (BREAK GLASS)

HS00080 — PB — DIESEL STOP SW. MOMENTARY CONTACTS

HS00012 — PB — DIESEL SHUT-DOWN RESET SW. MOMENTARY CONTACTS

HS00085 — AUTO / LOC/MAN — MASTER TRANSFER SWITCH HANDLE REMOVABLE ONLY IN AUTO POS.

HS00070 — OFF / LOWER / RAISE — GOVERNOR SPEED CONTROL SW. SPRING RETURN TO OFF

KJHS073 — RATED / IDLE — FIELD FLASH CONTROL SWITCH

LOCAL CONTROL SWITCH (KJ122 ONLY)

HS0110 — NORM / ISO — CR FIRE ISO. SW. MAINTAINED CONTACTS

EQUIPMENT DESCRIPTION	DIESEL KJ01A	DIESEL KJ01B
DIESEL START STOP SW.	KJ-HS0080A	KJHS0180A
GOV. SPEED CONTROL SW. (REMOTE)	KJ-HS0087A	KJHS0187A
GOV. SPEED CONTROL SW. (LOCAL)	KJ-HS0070	KJHS0170
DIESEL START SW.	KJ-HS0081C	KJHS0181C
DIESEL STOP SW.	KJ-HS0080C	KJHS0180C
DIESEL EMERGENCY START	KJ-HS0081D	KJHS0181D
DIESEL SHUTDOWN RESET SW.	KJ-HS0012	KJHS0112
MASTER TRANSFER SW.	KJ-HS0085	KJHS0185
MAIN CONTROL BD-HCB	RL015	RL015
RELAY PANEL - BLY PNL	NE107	NE106
ENGINE PANEL - ENG PNL	KJ121	KJ122
AIR START SOLENOIDS	KJPV0081A, KJPV0081B	KJPV0181A, KJPV0181B
SHUTDOWN SOLENOIDS	KJPV0080	KJPV0180
FIELD FLASH CONTROL SW.	KJHS073	KJHS173
CONTROL ROOM FIRE ISO. SW.	———	KJHS0110

ANNUNCIATOR WINDOWS

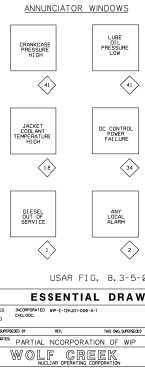

USAR FIG. 8.3-5-00

WINDOW NO.	DESCRIPTION
24	GEN. PROTECTION NOT BYPASSED DURING EMER. OPER.
5	STARTING AIR TRAIN A(C) PRESSURE LOW NOTE 2
7	GENERATOR UNDERFREQUENCY NOTE 1
12	STARTING AIR TRAIN B(D) PRESSURE LOW NOTE 2
14	GENERATOR UNDERVOLTAGE NOTE 1
1	FUEL OIL PRESSURE LOW NOTE 1
21	GENERATOR UNDER EXCITED
20	ENGINE OVERSPEED
42	BARRING DEVICE ENGAGED
27	ENGINE TROUBLE SHUTDOWN
26	ANY SWITCH NOT IN AUTO
35	GENERATOR FIELD GROUND
16	LUBE OIL LEVEL HIGH IN SUMP
9	LUBE OIL LEVEL LOW IN SUMP
23	LUBE OIL TEMPERATURE LOW
38	LUBE OIL TEMPERATURE HIGH
11	JACKET COOLANT TEMP LOW
31	LUBE OIL FILTER DIFFERENTIAL PRESS. HIGH
24	LUBE OIL STRAINER DIFF. PRESS. HIGH
8	FUEL OIL FILTER DIFF. PRESS. HIGH
18	ROCKER ARM LUBE OIL FILTER DIFF. PRESS. HIGH
17	ROCKER ARM LUBE OIL LEVEL HIGH
3	ROCKER ARM LUBE OIL PRESSURE LOW NOTE 1
48	INTERCOOLER WATER PRESSURE LOW NOTE 1
32	INTERCOOLER WATER TEMP LOW
34	INTERCOOLER WATER TEMP HIGH
6	DIESEL START FAILURE
25	JACKET COOLANT EXPANSION TNK. LEVEL LOW
15	FUEL OIL STRAINER DIFF. PRESS. HIGH
13	DIESEL BEARING TEMP HIGH
33	EXCITER PWR. P.T. FUSE STATUS (NE107 ONLY)
53	PT TROUBLE/PWR FAIL (NE106 ONLY)

NOTES:

1. CONTROL ROOM FIRE ISOLATION SWITCH IS USED ON KJ122 ONLY.

USAR FIG. 8.3-5-00

ESSENTIAL DRAWING

ID REVISED — INCORPORATED WP-E-12KJ01-006-A-1 — CHANGE 010251 — CHG. ORD. — PROC. NO.

THIS DWG. SUPERSEDES SP — REV. — THIS DWG. SUPERSEDES — REV.

REVISION NOTES: PARTIAL NCORPORATION OF WIP

WOLF CREEK NUCLEAR OPERATING CORPORATION

ELECTRONIC APPROVAL

STANDBY GENERATION ENGINE AND GOVERNOR CONTROL LOGIC DIAGRAM

SEAT: NONE — DRAWING NUMBER: E-12KJ01 — SHEET — REV: 07

3MAR 1 SEE

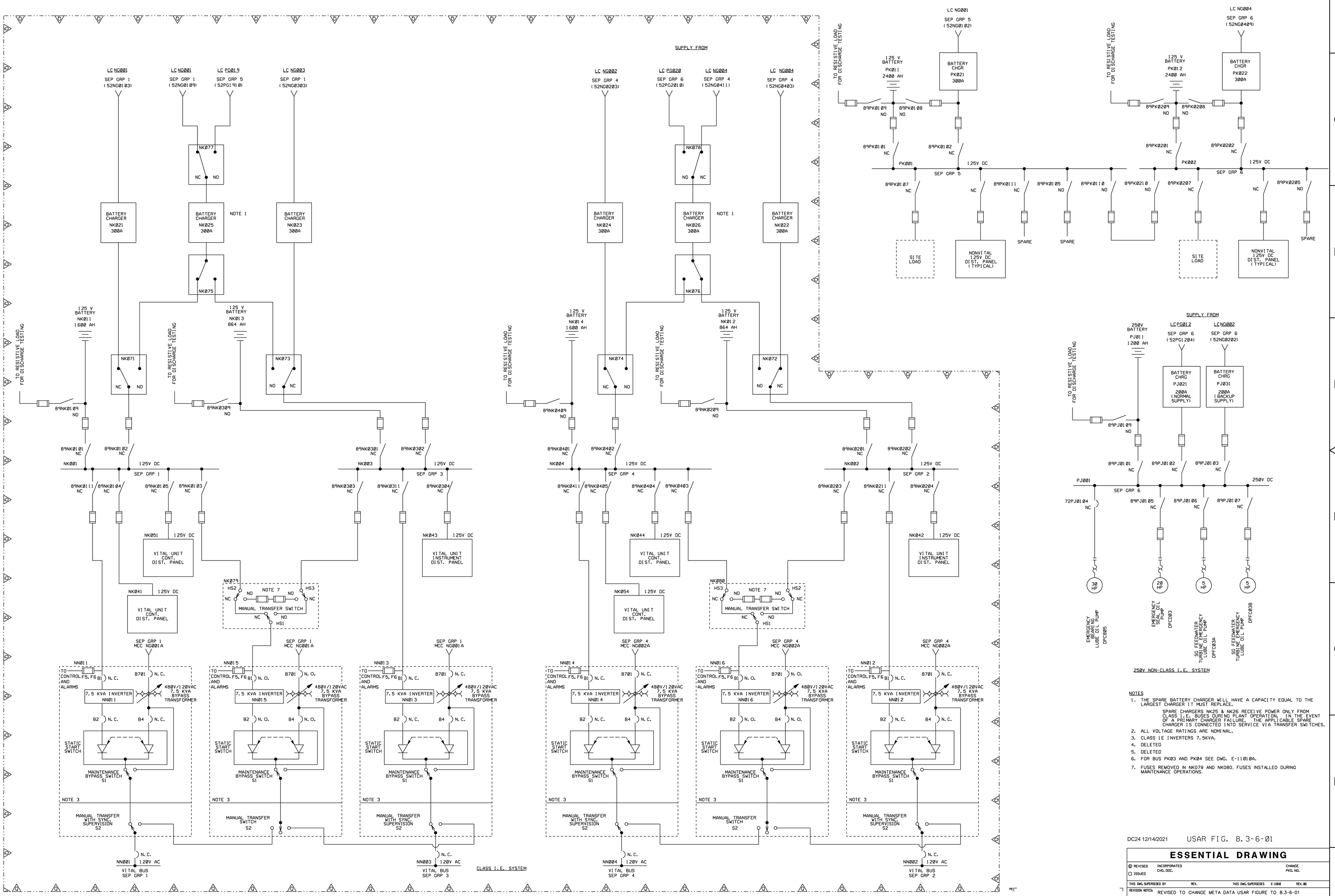

NOTES

1. THE SPARE BATTERY CHARGER WILL HAVE A CAPACITY EQUAL TO THE LARGEST CHARGER IT MUST REPLACE.

   SPARE CHARGERS NK25 & NK26 RECEIVE POWER ONLY FROM CLASS I.E. BUSES DURING PLANT OPERATION, IN THE EVENT OF A PRIMARY CHARGER FAILURE. THE APPLICABLE SPARE CHARGER IS CONNECTED INTO SERVICE VIA TRANSFER SWITCHES.
2. ALL VOLTAGE RATINGS ARE NOMINAL.
3. CLASS 1E INVERTERS 7.5KVA.
4. DELETED
5. DELETED
6. FOR BUS PK03 AND PK04 SEE DWG. E-11010A.
7. FUSES REMOVED IN NK079 AND NK080. FUSES INSTALLED DURING MAINTENANCE OPERATIONS.

DC24 12/14/2021 USAR FIG. 8.3-6-01

ESSENTIAL DRAWING

(X) REVISED INCORPORATED CHG. DOC. CHANGE PKG. NO.
( ) ISSUED

THIS DWG. SUPERSEDED BY REV. THIS DWG. SUPERSEDES E-11010 REV. 06

REVISION NOTES: REVISED TO CHANGE META DATA USAR FIGURE TO 8.3-6-01

WOLF CREEK NUCLEAR OPERATING CORPORATION

ELECTRONIC APPROVAL

DC MAIN SINGLE LINE DIAGRAM

SCALE	DRAWING NUMBER	SHEET	REV
NONE	E-11010		12

34X44 E SIZE

THIS DRAWING AND THE DESIGN IT COVERS IS THE PROPERTY OF THE UTILITIES WHICH ARE PARTICIPATING IN THE SNUPPS PROJECT IT IS LOANED ON THE BORROWER'S EXPRESS AGREEMENT THAT IT WILL NOT BE REPRODUCED, COPIED, LOANED, EXHIBITED, OR USED EXCEPT IN THE LIMITED WAY AND PRIVATE USE PERMITTED BY WRITTEN CONSENT GIVEN BY THE SNUPPS UTILITIES TO THE BORROWER.

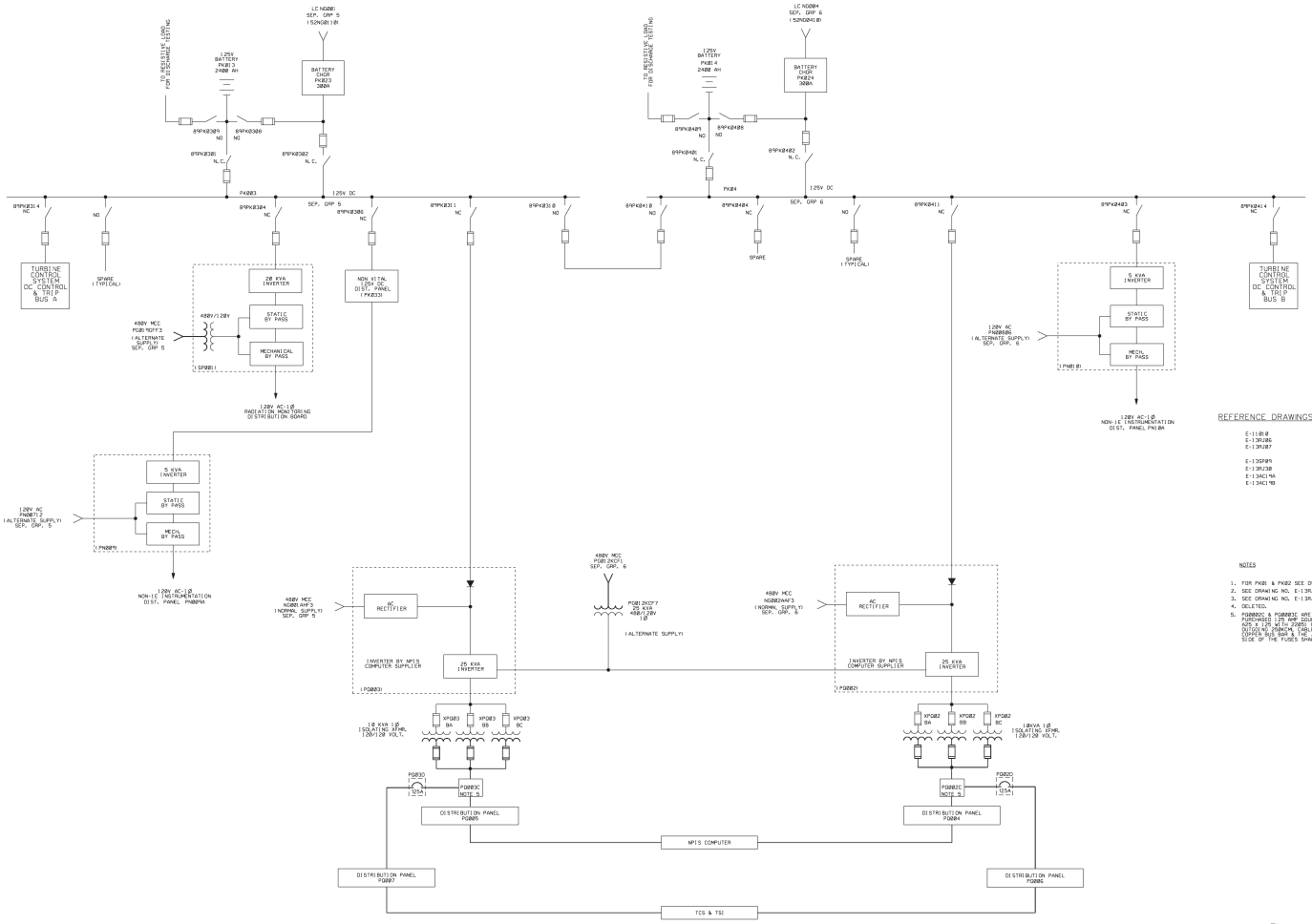

125V NON-CLASS I.E. SYSTEM

PK003 & PK004

REFERENCE DRAWINGS

E-11010
E-13RJ06
E-13RJ07

E-13SF09
E-13RJ30
E-13AC19A
E-13AC19B

NOTES

1. FOR PK001 & PK002 SEE DWG. NO. E-11010
2. SEE DRAWING NO. E-13RJ07 FOR DIST. PANEL DETAIL
3. SEE DRAWING NO. E-13RJ06 FOR DIST. PANEL DETAIL
4. DELETED.
5. PGBN003C & PGBN003E ARE NEMA 1 ENCLOSURES CONTAINING 3 FIELD PURCHASED 125 AMP. GOULD SHAWMUT AMPTRAP FUSES (CATALOG NO. TCL125). THE FUSES SHALL BE MOUNTED IN A VERTICAL POSITION. THE OUTGOING POWER CABLES SHALL BE TERMINATED ON A RIGHT COPPER BUS BAR & THE JUMPERS FROM THE COPPER BUS BAR TO THE LOAD SIDE OF THE FUSES SHALL BE #4 AWG.

USAR FIG. 8.3-7-00

ESSENTIAL DRAWING

⊕ REVISED	INCORPORATED CHLDRG.	CHANGE PKG. NO.
⊖ ISSUED		
THIS DWG. SUPERSEDES BY	REV.	THIS DWG. SUPERSEDES REV.
REVISION NOTES: USAR INFO ADDED		

WOLF CREEK NUCLEAR OPERATING CORPORATION — ELECTRONIC APPROVAL

DC MAIN SINGLE LINE DIAGRAM (PK03 AND PK04 BUS)

SCALE	DRAWING NUMBER	REV
NONE	E-11010A	05

SHEET 1 OF 1

E-11010A-1-05