TABLE OF CONTENTS

CHAPTER 9.0

AUXILIARY SYSTEMS

Section	Title	Page
9.1	FUEL STORAGE AND HANDLING	9.1-1
9.1.1	NEW FUEL STORAGE	9.1-1
9.1.1.1	Design Bases	9.1-1
9.1.1.2	Facility Description	9.1-3
9.1.1.3	Safety Evaluation	9.1-4
9.1.1.4	Tests and Inspections	9.1-5
9.1.1.5	Instrumentation Application	9.1-6
9.1.2	SPENT FUEL STORAGE AND TRANSFER	9.1-6
9.1.2.1	Design Bases	9.1-6
9.1.2.2	Facilities Description	9.1-8
9.1.2.3	Safety Evaluations	9.1-13
9.1.2.4	Tests and Inspections	9.1-15
9.1.2.5	Instrumentation Application	9.1-15
9.1.3	FUEL POOL COOLING AND CLEANUP SYSTEM	9.1 15
9.1.3.1	Design Bases	9.1-16
9.1.3.2	System Description	9.1-18
9.1.3.3	Safety Evaluation	9.1-25
9.1.4	FUEL HANDLING SYSTEM	9.1-28
9.1.4.1	Design Bases	9.1-28
9.1.4.2	System Description	9.1-29
9.1.4.3	Safety Evaluation	9 1-48
9.1.5	REFERENCES	9.1-64
App. 9.1A	FUEL STORAGE RACK ANALYSIS	9.1A-1
9.1A.1	THE HIGH DENSITY RACK (HDR) DESIGN CONCEPT	9.1A-1
9.1A.1.1	Introduction	9.1A-1
9.1A.1.2	Design Bases	9.1A-2
9.1A.1.3	Design Description	9.1A-3
9.1A.2	CRITICALITY ANALYSES FOR THE FUEL STORAGE POOL	9.1A-4
9.1A.2.1	Description of Fuel Storage Pool Conditions	9.1A-4
9.1A.2.1.1	Normal Operating Conditions	9.1A-4
9.1A.2.1.2	Abnormal and Accident Conditions	9.1A-6
9.1A.2.2	Analytical Methodology	9.1A-6
9.1A.2.2.1	Reference Fuel Assembly	9.1A-7
9.1A.2.2.2	High Density Reference Fuel Storage Cell	9.1A-7
9.1A.2.2.3	Analytical Technique	9.1A-7

TABLE OF CONTENTS (Continued)

Section	Title	Page
9.1A.2.2.3.1	Fuel Burnup Calculations and Uncertainties	9.1A-8
9.1A.2.2.3.2	Effect of Axial Burnup Distribution	9.1A-9
9.1A.2.2.4	Cnticality Analyses Uncertainties and Tolerances	9.1A-10
9.1A.2.2.4.1	Nominal Design	9.1A-10
9.1A.2.2.4.2	Uncertainties Due to Manufacturing Tolerances	9.1A-10
9.1A.2.2.4.2.1	Boron Loading Tolerances	9.1A-10
9.1A.2.2.4.2.2	Boral Width Tolerance	9.1A-11
9.1A.2.2.4.2.3	Tolerances in Cell Lattice Spacing	9.1A-11
9.1A.2.2.4.2.4	Stainless Steel Thickness Tolerances	9.1A-11
9.1A.2.2.4.2.5	Fuel Enrichment and Density Tolerances	9.1A-11
9.1A.2.2.4.3	Water-Gap Spacing Between Modules	9.1A-11
9.1A.2.2.4.4	Eccentric Fuel Positioning	9.1A-11
9.1A.2.2.5	Abnormal and Accident Conditions	9.1A-12
9.1A.2.2.5.1	Temperature and Water Density Effects	9.1A-12
9.1A.2.2.5.2	Lateral Rack Movement	9.1A-12
9.1A.2.2.5.3	Rack-Gap Changes	9.1A-13
9.1A.2.2.5.4	Abnormal Location of a Fuel Assembly	9.1A-13
9.1A.2.2.5.5	Dropped Fuel Assembly	9.1A-14
9.1A.2.2.6	Benchmark Calculations	9.1A-14
9.1A.2.2.6.1	Summary	9.1A-14
9.1A.2.2.6.2	Effect of Enrichment	9.1A-16
9.1A.2.2.6.3	Effect of ^{10}B Loading	9.1A-17
9.1A.2.2.6.4	Miscellaneous and Minor Parameters	9.1A-17
9.1A.2.2.6.4.1	Reflector Material and Spacings	9.1A-17
9.1A.2.2.6.4.2	Fuel Pellet Diameter and Lattice Pitch	9.1A-17
9.1A.2.2.6.4.3	Soluble Boron Concentration Effects	9.1A-18
9.1A.2.2.6.5	MOX Fuel	9.1A-18
9.1A.3	THERMAL AND HYDRAULIC ANALYSES	9.1A-18
9.1A.3.1	Decay Heat Load Limit	9.1A-20
9.1A.3.1.1	Decay Heat Load Calculations and conservatisms	9.1A-20
9.1A.3.2	Margin Against Boiling	9.1A-22
9.1A.3.2.1	Heat-up Calculations and Conservatism's	9.1A-22
9.1A.3.2.2	Time-to-Boil	9.1A-23
9.1A.3.3	Local Pool Water Temperature	9.1A-23
9.1A.3.3.1	Local Temperature Evaluation Methodology	9.1A-24
9.1A.3.3.2	Local Water and Fuel Cladding Temperatures	9.1A-27
9.1A.3.4	Fuel Rod Cladding Temperature	9.1A-27

TABLE OF CONTENTS (Continued)

Section	Title	Page
9.1A.3.5	Decay Heat Load Limits	9.1A-29
9.1A.4	STRUCTURAL AND SEISMIC CONSIDERATIONS	9.1A-29
9.1A.4.1	Analysis Methodology	9.1A-29
9.1A.4.1.1	Fuel Weights	9.1A-31
9.1A.4.1.2	Synthetic Time-Histories	9.1A-31
9.1A.4.2	WPMR Methodology	9.1A-31
9.1A.4.2.1	Model Assumptions	9.1A-32
9.1A.4.2.2	Stiffness Elements	9.1A-33
9.1A.4.2.3	Coefficients of Friction	9.1A-33
9.1A.4.2.4	Governing Equations of Motion	9.1A-34
9.1A.4.3	Structural Evaluation of the Fuel Rack Design	9.1A-34
9.1A.4.3.1	Stress Limit Evaluations	9.1A-35
9.1A.4.3.2	Loads and Loading Combinations for Fuel Storage Racks	9.1A-35
9.1A.4.3.3	Parametric Simulations	9.1A-36
9.1A.4.3.4	Time History Simulation Results	9.1A-37
9.1A.4.3.4.1	Rack Displacements	9.1A-37
9.1A.4.3.4.2	Pedestal Vertical Forces	9.1A-39
9.1A.4.3.4.3	Pedestal Friction Forces	9.1A-40
9.1A.4.3.4.4	Rack Impact Loads	9.1A-41
9.1A.4.3.4.5	Rack to Wall Impacts	9.1A-41
9.1A.4.3.4.6	Fuel to Cell Wall Impact Loads	9.1A-42
9.1A.4.3.5	Rack Structural Evaluation	9.1A-43
9.1A.4.3.5.1	Rack Stress Factors	9.1A-43
9.1A.4.3.5.2	Pedestal Thread Shear Stress	9.1A-44
9.1A.4.3.5.3	Local Stresses Due to Impacts	9.1A-45
9.1A.4.3.5.4	Assessment of Rack Fatigue Margin	9.1A-45
9.1A.4.3.5.5	Weld Stresses	9.1A-46
9.1A.4.3.5.6	Bearing Pad Analysis	9.1A-47
9.1A.4.3.5.7	Level A Evaluation	9.1A-47
9.1A.4.3.5.8	Hydrodynamic Loads on Pool Walls	9.1A-48
9.1A.4.4	Fuel Pool Structure Integrity	9.1A-49
9.1A.4.4.1	Description of Fuel Storage Pool Structure	9.1A-49
9.1A.4.4.2	Definition of Loads	9.1A-49
9.1A.4.4.2.1	Static Loading (Dead Loads and Live Loads)	9.1A-49
9.1A.4.4.2.2	Seismic Induced Loads	9.1A-50
9.1A.4.4.2.3	Thermal Loading	9.1A-50
9.1A.4.4.2.4	Pool Water Loading	9.1A-50
9.1A.4.4.3	Analysis Methodology	9.1A-50
9.1A.4.4.3.1	Finite Element Analysis Model	9.1A-50
9.1A.4.4.3.2	Analysis Technique	9.1A-51
9.14.4.4.3.3	Load Combinations	9.1A-52
9.1A.4.4.3.4	Results of Analyses	9.1A-53
9.1A.4.4.4	Pool Liner	9.1A-53
9.1A.4.4.5	Gamma Heating Considerations	9.1A-54
9.1A.4.4.6	Conclusions	9.1A-54
9.1A.5	ADMINISTRATIVE CONTROL OF FUEL MOVEMENT AND STORAGE IN REGIONS 2 AND 3	9.1A-54
9.1A.6	REFERENCES	9.1A-55

TABLE OF CONTENTS (Continued)

Section	Title	Page
9.2	WATER SYSTEMS	9.2-1
9.2.1	STATION SERVICE WATER SYSTEM	9.2-1
9.2.1.1	Service Water System	9.2-1
9.2.1.2	Essential Service Water System	9.2-3
9.2.2	COOLING SYSTEM FOR REACTOR AUXILIARIES	9.2-13
9.2.2.1	Design Bases	9.2-13
9.2.2.2	System Description	9.2-14
9.2.2.3	Safety Evaluation	9.2-19
9.2.2.4	Tests and Inspections	9.2-21
9.2.2.5	Instrumentation Applications	9.2-21
9.2.3	DEMINERALIZED WATER MAKEUP SYSTEM	9.2-22
9.2.3.1	Design Bases	9.2-22
9.2.3.2	System Description	9.2-23
9.2.3.3	Safety Evaluation	9.2-26
9.2.3.4	Tests and Inspections	9.2-26
9.2.3.5	Instrumentation Applications	9.2-26
9.2.4	POTABLE AND SANITARY WATER SYSTEM	9.2-27
9.2.4.1	Design Bases	9.2-27
9.2.4.2	System Description	9.2-28
9.2.4.3	Safety Evaluation	9.2-30
9.2.4.4	Tests and Inspections	9.2-30
9.2.4.5	Instrumentation Application	9.2-30
9.2.5	ULTIMATE HEAT SINK	9.2-31
9.2.5.1	Design Bases	9.2-31
9.2.5.2	System Description	9.2-31
9.2.5.3	Safety Evaluation	9.2-36
9.2.5.4	Tests and Inspections	9.2-40
9.2.5.5	Instrumentation Application	9.2-40
9.2.6	CONDENSATE STORAGE AND TRANSFER SYSTEM	9.2-41
9.2.6.1	Design Bases	9.2-41
9.2.6.2	System Description	9.2-41
9.2.6.3	Safety Evaluation	9.2-43
9.2.6.4	Tests and Inspections	9.2-43
9.2.6.5	Instrumentation Applications	9.2-43
9.2.7	REACTOR MAKEUP WATER SYSTEM	9.2-43
9.2.7.1	Design Bases	9.2-43
9.2.7.2	System Description	9.2-44
9.2.7.3	Safety Evaluation	9.2-47
9.2.7.4	Tests and Inspections	9.2-47
9.2.7.5	Instrumentation Applications	9.2-48

TABLE OF CONTENTS (Continued)

Section	Title	Page
9.2.8	CLOSED COOLING WATER SYSTEM	9.2-48
9.2.8.1	Design Bases	9.2-48
9.2.8.2	System Description	9.2-49
9.2.8.3	Safety Evaluation	9.2-50
9.2.8.4	Tests and Inspections	9.2-50
9.2.8.5	Instrument Applications	9.3-51
9.2.9	REFERENCES	9.2-51
9.3	PROCESS AUXILIARIES	9.3-1
9.3.1	COMPRESSED AIR SYSTEM	9.3-1
9.3.1.1	Design Bases	9.3-1
9.3.1.2	System Description	9.3-2
9.3.1.3	Safety Evaluation	9.3-5
9.3.1.4	Tests and Inspections	9.3-6
9.3.1.5	Instrumentation Applications	9.3-7
9.3.2	PLANT SAMPLING SYSTEMS	9.3-7
9.3.2.1	Design Bases	9 3-8
9.3.2.2	System Description	9.3-9
9.3.2.3	Safety Evaluation	9.3-12
9.3.2.4	Tests and Inspections	9.3-12
9.3.2.5	Instrumentation Applications	9.3-12
9.3.3	EQUIPMENT AND FLOOR DRAINAGE SYSTEMS	9.3-13
9.3.3.1	Design Bases	9.3-13
9.3.3.2	System Description	9.3-15
9.3.3.3	Safety Evaluation	9.3-26
9.3.3.4	Tests and Inspections	9.3-27
9.3.3.5	Instrumentation Application	9.3-28
9.3.4	CHEMICAL AND VOLUME CONTROL SYSTEM	9.3-29
9.3.4.1	Design Bases	9.3-30
9.3.4.2	System Description	9.3-33
9.3.4.3	Safety Evaluation	9.3-65
9.3.4.4	Tests and Inspections	9.3-68
9.3.4.5	Instrumentation Application	9.3-68
9.3.5	SERVICE GAS SYSTEM	9.3-69
9.3.5.1	Design Bases	9.3-69
9.3.5.2	System Description	9.3-70
9.3.5.3	Safety Evaluation	9.3-72
9.3.5.4	Tests and Inspections	9.3-72
9.3.5.5	Instrumentation Application	9.3-73

TABLE OF CONTENTS (Continued)

Section	Title	Page
9.3.6	BORON RECYCLE SYSTEM	9.3-73
9.3.6.1	Design Bases	9.3-73
9.3.6.2	System Description	9.3-74
9.3.6.3	Safety Evaluation	9.3-78
9.3.6.4	Tests and Inspections	9.3-78
9.3.6.5	Instrumentation Application	9.3-78
9.4	AIR CONDITIONING, HEATING, COOLING, AND VENTILATION	9.4-1
9.4.1	CONTROL BUILDING HVAC	9.4-1
9.4.1.1	Design Bases	9.4-1
9.4.1.2	System Description	9.4-4
9.4.1.3	Safety Evaluation	9.4-15
9.4.1.4	Tests and Inspections	9.4-17
9.4.1.5	Instrumentation Applications	9.4-18
9.4.2	FUEL BUILDING HVAC	9.4-18
9.4.2.1	Design Bases	9.4-19
9.4.2.2	System Description	9.4-21
9.4.2.3	Safety Evaluation	9.4-27
9.4.2.4	Tests and Inspections	9.4-28
9.4.2.5	Instrumentation Applications	9.4-29
9.4.3	AUXILIARY BUILDING	9.4-30
9.4.3.1	Design Bases	9.4-31
9.4.3.2	System Description	9.4-33
9.4.3.3	Safety Evaluations	9.4-44
9.4.3.4	Tests and Inspections	9.4-45
9.4.3.5	Instrumentation Applications	9.4-46
9.4.4	TURBINE BUILDING HVAC	9.4-47
9.4.4.1	Design Bases	9.4-47
9.4.4.2	System Description	9.4-49
9.4.4.3	Safety Evaluation	9.4-54
9.4.4.4	Tests and Inspections	9.4-55
9.4.4.5	Instrumentation Applications	9.4-55
9.4.5	RADWASTE BUILDING HVAC	9.4-56
9.4.5.1	Design Bases	9.4-56
9.4.5.2	System Description	9.4-57
9.4.5.3	Safety Evaluation	9.4-60
9.4.5.4	Tests and Inspections	9.4-60
9.4.5.5	Instrumentation Applications	9.4-61

TABLE OF CONTENTS (Continued)

Section	Title	Page
9.4.6	CONTAINMENT HVAC	9.4-61
9.4.6.1	Design Bases	9.4-62
9.4.6.2	System Description	9.4-65
9.4.6.3	Safety Evaluation	9.4-75
9.4.6.4	Tests and Inspections	9.4-76
9.4.6.5	Instrumentation Applications	9.4-77
9.4.7	DIESEL GENERATOR BUILDING VENTILATION	9.4-78
9.4.7.1	Design Bases	9.4-78
9.4.7.2	System Description	9.4-79
9.4.7.3	Safety Evaluation	9.4-82
9.4.7.4	Tests and Inspections	9.4-83
9.4.7.5	Instrumentation Applications	9.4-83
9.4.8	ESSENTIAL SERVICE WATER PUMPHOUSE VENTILATION	9.4-84
9.4.8.1	Design Bases	9.4-84
9.4.8.2	System Description	9.4-85
9.4.8.3	Safety Evaluation	9.4-88
9.4.8.4	Tests and Inspections	9.4-89
9.4.8.5	Instrumentation Applications	9.4-89
9.4.9	PLANT HEATING SYSTEM	9.4-89
9.4.9.1	Design Bases	9.4-89
9.4.9.2	System Description	9.4-89
9.4.9.3	Safety Evaluation	9.4-91
9.4.9.4	Tests and Inspections	9.4-91
9.4.9.5	Instrumentation Applications	9.4-91
9.4.10	CENTRAL CHILLED WATER SYSTEM	9.4-91
9.4.10.1	Design Bases	9.4-92
9.4.10.2	System Description	9.4-92
9.4.10.3	Safety Evaluation	9.4-94
9.4.10.4	Tests and Inspections	9.4-94
9.4.10.5	Instrumentation Applications	9.4-94
9.4.11	Essential Service Water Vertical Loop Chase Ventilation	
9.5	OTHER AUXILIARY SYSTEMS	9.5-1
9.5.1	FIRE PROTECTION SYSTEM	9.5-1
9.5.1.1	Design Bases	9.5-1
9.5.1.2	System Description	9.5-2
9.5.1.3	Safety Evaluation	9.5-27
9.5.1.4	Tests and Inspection	9.5-28
9.5.1.5	Instrumentation Applications	9.5-28
9.5.1.6	Personnel Qualification and Training	9.5-28
9.5.1.7	Equipment Operability	9.5-28

TABLE OF CONTENTS (Continued)

Section	Title	Page
9.5.2	COMMUNICATION SYSTEMS	9.5-37
9.5.2.1	Design Bases	9.5-38
9.5.2.2	System Description	9.5-39
9.5.2.3	Safety Evaluation	9.5-41
9.5.2.4	Tests and Inspections	9.5-42
9.5.3	LIGHTING SYSTEM	9.5-42
9.5.3.1	Design Bases	9.5-42
9.5.3.2	System Description	9.5-42
9.5.3.3	Failure Analysis	9.5-44
9.5.3.4	Tests and Inspections	9.5-45
9.5.4	EMERGENCY DIESEL ENGINE FUEL OIL STORAGE AND TRANSFER SYSTEM	9.5-45
9.5.4.1	Design Bases	9.5-45
9.5.4.2	System Description	9.5-46
9.5.4.3	Safety Evaluation	9.5-51
9.5.4.4	Tests and Inspections	9.5-52
9.5.4.5	Instrumentation Applications	9.5-52
9.5.5	EMERGENCY DIESEL ENGINE COOLING WATER SYSTEM	9.5-53
9.5.5.1	Design Bases	9.5-53
9.5.5.2	System Description	9.5-54
9.5.5.3	Safety Evaluation	9.5-58
9.5.5.4	Tests and Inspections	9.5-59
9.5.5.5	Instrumentation Applications	9.5-59
9.5.6	EMERGENCY DIESEL ENGINE STARTING SYSTEM	9.5-60
9.5.6.1	Design Bases	9.5-60
9.5.6.2	System Description	9.5-61
9.5.6.3	Safety Evaluation	9.5-64
9.5.6.4	Tests and Inspections	9.5-65
9.5.6.5	Instrumentation Applications	9.5-65
9.5.7	EMERGENCY DIESEL ENGINE LUBRICATION SYSTEM	9.5-66
9.5.7.1	Design Bases	9.5-66
9.5.7.2	System Description	9.5-67
9.5.7.3	Safety Evaluation	9.5-73
9.5.7.4	Tests and Inspections	9.5-74
9.5.7.5	Instrumentation Applications	9.5-74
9.5.8	EMERGENCY DIESEL ENGINE COMBUSTION AIR INTAKE AND EXHAUST SYSTEM	9.5-75
9.5.8.1	Design Bases	9.5-75
9.5.8.2	System Description	9.5-76
9.5.8.3	Safety Evaluation	9.5-80
9.5.8.4	Test and Inspections	9.5-80
9.5.8.5	Instrumentation Applications	9.5-81

TABLE OF CONTENTS (Continued)

Section	Title	Page
9.5.9	AUXILIARY STEAM SYSTEM	9.5-81
9.5.9.1	Design Bases	9.5-81
9.5.9.2	System Description	9.5-82
9.5.9.3	Safety Evaluation	9.5-84
9.5.9.4	Test and Inspections	9.5-84
9.5.9.5	Instrumentation Applications	9.5-84
9.5.10	BREATHING AIR SYSTEM	9.5-84
9.5.10.1	Design Basis	9.5-84
9.5.10.2	System Description	9.5-85
9.5.10.3	Safety Evaluation	9.5-86
9.5.10.4	Tests and Inspections	9.5-86
9.5.10.5	Instrumentation Applications	9.5-86
9.5.11	Station Blackout Diesel Generator Support Systems	9.5-86
9.5.11.1	General Description	9.5-86
9.5.11.2	Interfacing systems	9.5-87
9.5.11.3	System Testing	9.5-87
9.5.11.4	Component Descriptions	9.5-87
App. 9.5A	DESIGN COMPARISON TO REGULATORY POSITIONS OF REGULATORY GUIDE 1.120, REVISION 1, DATED NOVEMBER 1977, TITLED "FIRE PROTECTION GUIDELINES FOR NUCLEAR POWER PLANTS"	9.5A-0
App. 9.5B	FIRE HAZARDS ANALYSES	9.5B-0
App. 9.5C	RESPONSES TO QUESTIONS CONTAINED IN THE NRC'S LETTERS DATED NOVEMBER 3, 1977 FROM OLAN D. PARR TO THE SNUPPS UTILITY APPLICANTS	9.5C-0
App. 9.5D	RESPONSE TO QUESTIONS CONTAINED IN THE NRC'S LETTERS DATED OCTOBER 18, 1979 FROM OLAN D. PARR TO THE SNUPPS UTILITY APPLICANTS	9.5D-0
App. 9.5E	10 CFR PART 50 APPENDIX R COMPARISON	9.5E-0

TABLE OF CONTENTS (Continued)

Table No.	Title
9.1-1	New Fuel Storage Design Data
9.1-2	Spent Fuel Storage Design Data
9.1-3	Design Comparison to Regulatory Positions of Regulatory Guide 1.13 Revision 1, Dated December 1975 Titled "Spent Fuel Storage Facility Design Basis"
9.1-4	Fuel Pool Cooling and Cleanup System Design Parameters
9.1-5	Fuel Pool Cooling and Cleanup System Component Design Parameters
9.1-6	Spent Fuel Pool Cooling and Cleanup System Single Active Failure
9.1-7	Fuel Handling Crane Data
9.1-8	Deleted
9.1-9	Weight of Reactor Vessel Head
9.1-10	Final head Weight with SHA Modification Components for Drop Analysis
9.1-11	Vertical Deformation of Reactor Vessel and Supports Due to a Postulated SHA Drop Accident
9.1A-1	Summary of the Criticality Safety Analysis for the MZTR Storage Configuration
9.1A-2	Summary of the Criticality Safety Analysis for the Interim Checkerboard Storage Configuration
9.1A-3	Reactivity Effects of Abnormal and Accident Conditions
9.1A-4	Design Basis Fuel Assembly Specifications
9.1A-5	Reactivity Effects of Manufacturing Tolerances
9.1A-6	Reactivity Effects of Temperature and Void
9.1A-7	Summary of Criticality Benchmark Calculations
9.1A-8	Comparison of MCNP4a and KENO5a Calculated Reactivities for Various Enrichments
9. 1A-9	MCNP4a Calculated Reactivities for Critical Experiments with Neutron Absorbers
9.1A-10	Comparison of MCNP4a and KENO5a Calculated Reactivities for Various B10 Loadings
9.1A-11	Calculations for Critical Experiments with Thick Lead and Steel Reflectors

TABLE OF CONTENTS (Continued)

Table No.	Title
9.1A-12	Calculations for Critical Experiments with Various Soluble Boron Concentrations
9.1A-13	Calculations for Critical Experiments with MOX Fuel
9.1A-14	Data for Decay Heat Load Limit Evaluation
9.1A-15	Data for Time-To-Boil Evaluation
9.1A-16	Data for Local Temperature Evaluation
9.1A-17	Results of Decay Heat Load Limit Evaluation
9.1A-18	Rack Material Data (200°F)
9.1A-19	Time-History Statistical Correlation Results
9.1A-20	Comparison of Bounding Calculated Load/Stresses vs. Code Allowables At Impact Locations and At Welds
9.1A-21	Bending Strength Evaluation
9.1A-22	Shear Strength Evaluation
9.2-1	Service Water System Flow Requirements Normal Power Generation Operation
9.2-2	Essential Service Water System Flow Requirements Normal Power Generation Operation
9.2-3	Essential Service Water System Flow Requirements Post-LOCA Operation
9.2-4	Essential Service Water System Flow Requirements Normal Shutdown Operation
9.2-5	Essential Service Water System Component Data
9.2-6	Essential Service Water System Single Active Failure Analysis
9.2-7	Essential Service Water System, Indicating and Alarm Devices
9.2-8	Essential Service Water system, Indicating and Alarm Devices
9.2-9	Component Cooling Water System Requirements Normal Operation
9.2-10	Component Cooling Water System Requirements Shutdown (@ 4 Hours) Operations
9.2-11	Component Cooling Water System Requirements Post-LOCA
9.2-12	Component Cooling Water System Component Data

TABLE OF CONTENTS (Continued)

Table No.	Title
9.2-13	Component Cooling Water System Single Active Failure Analysis
9.2-14	Component Cooling Water system, Indicating and Alarm Devices
9.2-15	Major Components Supplied with Water from Demineralized Water Storage and Transfer System
9.2-16	Plant Water Chemistry Specifications
9.2-17	ESW/UHS Cooling Water Chemistry Analysis
9.2-18	Deleted
9.2-19	Heat Loads from Station Auxiliaries Post-LOCA
9.2-20	Heat Loads from Station Auxiliaries Normal Shutdown
9.2-21	Design Comparison to Regulatory Positions of Regulatory Guide 1.27, Revision 2, Dated January 1976, Titled "Ultimate Heat Sink for Nuclear Power Plants"
9.2-22	Components and Systems Served by Condensate Storage and Transfer System
9.2-23	Summary of Reactor Makeup Water Requirements
9.2-24	Components Cooled by the Closed Cooling Water System
9.2-25	Minimum ESW Total System Temperature Rise
9.2-26	Condensate Storage and Transfer System Component Data
9.3-1	Component Description Compressed Air System
9.3-2	Safety-Related Pneumatically Operated Valves
9.3-3	Primary Sampling System Sample Point Design Data
9.3-4	Radwaste Sampling System Sample Point Design Data
9.3-5	Process Sampling System Sample Point Design Data
9.3-6	List of Grab Sample Points for Primary and Radwaste Sampling Systems

TABLE OF CONTENTS (Continued)

Table No.	Title
9.3-7	Floor and Equipment Drainage System Single Active Failure Analysis
9.3-8	Chemical and Volume Control System Design Parameters
9.3-9	Chemical and Volume Control System Principal Component Data Summary
9.3-10	Failure Mode and Effects Analysis - Chemical and Volume Control System Active Components - Normal Plant Operation and Safe Shutdown
9.3-11	Service Gas Requirements
9.3-12	Laboratory Gas Requirements
9.3-13	Boron Recycle System Principal Component Data Summary
9.4-1	Outside Environment Design Conditions
9.4-2	Design Comparison to Regulatory Positions of Regulatory Guide 1.52, Revision 2, Dated March 1978, Titled "Design, Testing, and Maintenance Criteria for Post-Accident Engineered-Safety-Feature Atmosphere Cleanup System Air Filtration and Adsorption Units of Light-Water-Cooled Nuclear Power Plants"
9.4-3	Design Comparison to Regulatory Positions of Regulatory Guide 1.140, Revision 0, Dated March 1978, Titled "Design, Testing, and Maintenance Criteria for Normal Ventilation Exhaust System Air Filtration and Adsorption Units of Light-Water-Cooled Nuclear Power Plants"
9.4-4	Design Data for Control Building HVAC System Components
9.4-5	Single-Failure Analyses Control Building HVAC Systems
9.4-6	Design Data for Fuel Building HVAC System Components

TABLE OF CONTENTS (Continued)

Table No.	Title
9.4-7	Single-Failure Analysis - Emergency Exhaust System, Spent Fuel Pool Pump Room Coolers, and Fuel Building HVAC Isolation
9.4-8	Design Data for Auxiliary Building HVAC System Components
9.4-9	Single-Failure Analyses - Pump Room Coolers, Penetration Room Coolers and Emergency Exhaust System
9.4-10	Design Data for Turbine Building Ventilation System Components
9.4-11	Design Data for Radwaste Building HVAC System Components
9.4-12	Design Data for the Containment HVAC System Components
9.4-13	Comparison of Containment Minipurge Containment Isolation Valves with BTP CSB 6-4
9.4-14	Design Data for the Diesel Generators Building Ventilation System Components
9.4-15	Single-Failure Analyses - Diesel Generator Building Ventilation System
9.4-16	Essential Service Water Pumphouse and UHS Electrical Equipment Room Ventilation System Components
9.4-17	Single-Failure Analyses - Essential Service Water Pumphouse Ventilation System
9.4-18	Design Data for Plant Heating System Components
9.4-19	Design Data for Central Chilled Water System Components
9.5.1-1	Fire Protection System Design Codes and Standards
9.5.1-2	Fire Protection System Fire Suppression Systems
9.5.1-3	Deleted

TABLE OF CONTENTS (Continued)

Table No.	Title
9.5.2-1	Communication Systems in Plant Areas Required to be Manned for Post Fire Safe Shutdown Following Control Room Evacuation
9.5.4-1	Emergency Diesel Engine Fuel Oil Storage and Transfer System Component Data
9.5.4-2	Emergency Diesel Engine Fuel Oil Storage and Transfer System Indicating and Alarm Devices
9.5.4-3	Comparison of the Design to Regulatory Positions of Regulatory Guide 1.137, Revision 0, dated January 1978, "Fuel-Oil Systems for Standby Diesel Generators"
9.5.5-1	Emergency Diesel Engine Cooling Water System Component Data (per Diesel Engine)
9.5.6-1	Emergency Diesel Engine Starting System Component Data
9.5.7-1	Emergency Diesel Engine Lubrication System Component Data
9.5.7-2	Emergency Diesel Engine Lubrication System Indicating Devices
9.5.8-1	Emergency Diesel Engine Combustion Air Intake and Exhaust System Component Data
9.5.9-1	Components Supplied by Auxiliary Steam
9.5A-1	WCGS Fire Protection Comparison to APCSB 9.5-1, Appendix A
9.5E-1	WCGS Fire Protection Comparison to 10CFR50, Appendix R

CHAPTER 9 - LIST OF FIGURES

*Refer to Section 1.6 and Table 1.6-3. Controlled drawings were removed from the USAR at Revision 17 and are considered incorporated by reference.

Figure #	Sheet	Title	Drawing #*
9.1-1	0	New Fuel Storage Rack	
9.1-2	1	Elevation View of Rack Layout	
9.1-2	2	Rack Structure & Misc. Details	
9.1-2	3	Pool Layout for Wolf Creek	
9.1-3	1	Fuel Pool Cooling and Cleanup System	M-12EC01
9.1-3	2	Fuel Pool Cooling and Cleanup System	M-12EC02
9.1-4	0	Arrangement Drawing Containment Building Polar Crane	
9.1-5	0	Hook Limits for Containment Building Polar Crane	
9.1-6	0	Arrangement Drawing Fuel Building Cask Handling Crane	
9.1-7	0	Hook Limits for Fuel Building Cask Handling Crane	
9.1-8	0	Arrangement Drawing Spent Fuel Bridge Crane	
9.1-9	0	Hook Limits for Spent Fuel Pool Bridge Crane	
9.1-10	0	Refueling Machine	
9.1-11	0	New Fuel Elevator	
9.1-12	0	Fuel Transfer System	
9.1-13	0	Rod Cluster Control Charging Fixture	
9.1-14	0	Spent Fuel Handling Tool	
9.1-15	0	New Fuel Handling Tool	
9.1-16	0	Upper Core Barrel Handling Fixture	
9.1-17	0	Quick-Acting Stud Tensioner	
9.1-18	0	Model of Critical Buckling Load for the Drive Rod	
9.1-19	0	Buckling Load for Section 2	
9.1-20	0	Buckling Load for Section 1	
9.1-21	0	Spring Mass System of the Head Upper Package and Reactor Vessel	
9.1-22	0	Upper Portion of Vessel	
9.1-23	0	Outlet Nozzle	
9.1-24	0	Details of Seismic Restraint Assembly-Plan View	
9.1-25	0	Details of Snubber Earthquake Restraint Assembly	
9.1-26	0	Polar Crane in the “Parked Position” at AZ. 315° during Plant Operation	
9.1A-1	0	Representation of the KENO5a Reference MZTR Calculational Model	
9.1A-2	0	Representation of the KENO5a Reference Checkerboard Calculational Model	
9.1A-3	0	Minimum Required Fuel Assembly Burnup as a Function of Nominal Enrichment to Permit Storage in Regions 2 and 3 (Fuel assemblies with enrichments less than 2.0wt% ^{235}U will conservatively be required to meet the burnup requirements of 2.0 wt% ^{235}U assemblies).	

CHAPTER 9 - LIST OF FIGURES

*Refer to Section 1.6 and Table 1.6-3. Controlled drawings were removed from the USAR at Revision 17 and are considered incorporated by reference.

Figure #	Sheet	Title	Drawing #*
9.1A-4	0	MCNP Calculated k-eff Values for Various Values of the Spectral Index	
9.1A-5	0	KENO5a Calculated k-eff Values for Various Values of the Spectral Index	
9.1A-6	0	MCNP Calculated k-eff Values at Various U-235 Enrichments	
9.1A-7	0	KENO Calculated k-eff Values at Various U-235 Enrichments	
9.1A-8	0	Comparison of MCNP and KEN05a Calculations for Various Fuel Enrichments	
9.1A-9	0	Comparison of MCNP and KENO5a Calculations for Various Boron-10 Areal Densities	
9.1A-10	0	Fuel Storage Pool Cooling Model	
9.1A-11	0	Isometric View of Spent Fuel Pool CFD Model	
9.1A-12	0	Wolf Creek Elevation 2007 ft. Spent Fuel Pool Time History Accelerogram X Direction of Bounding OBE Spectra (2% Damping)	
9.1A-13	0	Wolf Creek Elevation 2007 ft. Spent Fuel Pool Time History Accelerogram Y Direction of Bounding OBE Spectra (2% Damping)	
9.1A-14	0	Wolf Creek Elevation 2007 ft. Spent Fuel Pool Time History Accelerogram Z Direction of Bounding OBE Spectra (2% Damping)	
9.1A-15	0	Wolf Creek Elevation 2007 ft. Spent Fuel Pool Time History Accelerogram X Direction of Bounding DBE Spectra (4% Damping)	
9.1A-15a	0	Wolf Creek Elevation 2007 ft. Spent Fuel Pool Time History Accelerogram Y Direction of Bounding DBE Spectra (4% Damping)	
9.1A-16	0	Wolf Creek Elevation 2007 ft. Spent Fuel Pool Time History Accelerogram Z Direction of Bounding DBE Spectra (4% Damping)	
9.1A-17	0	Wolf Creek Fuel Storage Pool Rack Impact Spring Numbering Scheme (Bottom)	
9.1A-18	0	Wolf Creek Fuel Storage Pool Rack Impact Spring Numbering Scheme (Top)	
9.1A-19	0	Wolf Creek Half-Full Fuel Storage Pool Bottom Springs at Baseplate	
9.1A-20	0	Wolf Creek Half-Full Fuel Storage Pool Top Springs	
9.1A-21	0	Wolf Creek Cask Loading Pool Bottom Springs	
9.1A-22	0	Wolf Creek Cask Loading Pool Top Springs	

CHAPTER 9 - LIST OF FIGURES

*Refer to Section 1.6 and Table 1.6-3. Controlled drawings were removed from the USAR at Revision 17 and are considered incorporated by reference.

Figure #	Sheet	Title	Drawing #*
9.1A-23	0	Isometric View of the Fuel Storage Pool Area	
9.1A-24	0	Plan View and Dimensions of the Fuel Storage Pool Area	
9.1A-25	0	Plot of Gap Between Racks 13 and 14 at Spring No. 496 in Full SFP Model	
9.1A-26	0	Plot of Gap Between Racks 14 and 15 at Spring No. 504 in Full SFP Model	
9.1A-27	0	Plot of Gap Between Racks 14 and the wall at Spring No. 501 in Full SFP Model	
9.2-1	1	Service Water System	M-12EA01
9.2-1	2	Service Water System	M-12EA02
9.2-1	3	Service Water System	M-0022 Sheet 1
9.2-2	1	Essential Service Water System	M-12EF01
9.2-2	2	Essential Service Water System	M-12EF02
9.2-2	3	Essential Service Water System	M-K2EF01
9.2-2	4	Essential Service Water System	M-K2EF03
9.2-3	0	ESW Pumphouse Equipment Location - Plan	M-KG080
9.2-4	0	ESWS Pumphouse Equipment Location - Sections	M-KG081
9.2-5	1	Makeup Demineralizer System	M-0025 Sheet 1
9.2-5	2	Makeup Demineralizer System	M-0025 Sheet 2
9.2-5	3	Makeup Demineralizer System	M-0025 Sheet 3
9.2-5	4	Makeup Demineralizer System	M-0025 Sheet 4
9.2-5	4A	Makeup Demineralizer System	M-0025 Sheet 4A
9.2-5a	0	Potable Water System	A-0503 Sheet 1
9.2-6	0	Deleted	
9.2-6A	0	Heat Rejection Rate to Ultimate Heat Sink - LOCA	
9.2-6B	0	Double Ended Pump Suction Guillotine Break, Maximum Safety Injection, 4 Air Coolers, Total Air Cooler Heat Removal Rate vs Time	
9.2-6C	0	Double Ended Pump Suction Guillotine Break, Maximum Safety Injection, 4 Air Coolers, RHR Heat Exchanger Heat Removal Rate Vs Time	
9.2-7	0	Ultimate Heat Sink Inlet and Outlet Temperatures - Worst Temperature Period	
9.2-8	0	Deleted	
9.2-9	0	Deleted	
9.2-10	0	Ultimate Heat Sink - Elevation - Worst Evaporation Period	
9.2-11	0	Transient Velocity at Wolf Creek UHS Location - Case I	
9.2-12	0	Transient Velocity at Wolf Creek UHS Location - Case II	

CHAPTER 9 - LIST OF FIGURES

*Refer to Section 1.6 and Table 1.6-3. Controlled drawings were removed from the USAR at Revision 17 and are considered incorporated by reference.

Figure #	Sheet	Title	Drawing #*
9.2-13	0	Reactor Make-up Water System	M-12BL01
9.2-14	0	Closed Cooling Water System	M-12EB01
9.2-15	1	Component Cooling Water System	M-12EG01
9.2-15	2	Component Cooling Water System	M-12EG02
9.2-15	3	Component Cooling Water System	M-12EG03
9.2-16	0	Demineralized Water Storage and Transfer System	M-12AN01
9.2-17	1	Domestic Water System	M-12KD01
9.2-17	2	Domestic Water System	M-12KD02
9.2-18	0	Integrated Heat Rejection to Ultimate Heat Sink - LOCA	
9.2-19	0	Heat Rejection Rate to Ultimate Heat Sink - Shutdown	
9.2-20	0	Integrated Heat Rejected to Ultimate Heat Sink - Shutdown	
9.2-21	0	Emergency Makeup Water Requirement - LOCA	
9.2-22	0	Integrated Emergency Makeup Water Requirement	
9.2-23	0	Condensate Storage and Transfer System	M-12AP01
9.2-24	1	Waste Water Treatment Facility	M-12WT01
9.2-25	1	Waste Water Treatment Facility	M-12WT03
9.3-1	1	Compressed Air System	M-12KA01
9.3-1	2	Compressed Air System (Service Air)	M-12KA02
9.3-1	3	Instrument Air System	M-12KA03
9.3-1	4	Instrument Air System	M-12KA04
9.3-1	5	Compressed Air System	M-12KA05
9.3-1	6	Compressed Air System	M-12KA06
9.3-1	7	Compressed Air System	M-12KA07
9.3-2	1	Nuclear Sampling System	M-12SJ01
9.3-2	2	Nuclear Sampling System	M-12SJ03
9.3-3	0	Nuclear Sampling System	M-12SJ02
9.3-4	1	Process Sampling System	M-12RM01
9.3-4	2	Process Sampling System	M-12RM02
9.3-4	3	Process Sampling System	M-12RM03
9.3-5	1	Sanitary Lift Station & Turb. Bldg. Sanitary Drainage System	M-12LA01
9.3-5	2	Comm. Corridor & Control Bldg. Sanitary Drainage System	M-12LA02
9.3-5	3	Chemical and Detergent Waste	M-12LD01
9.3-5	4	Turbine Bldg. and Aux. Feedwater Pump Rooms Oily Waste System	M-12LE01

CHAPTER 9 - LIST OF FIGURES

*Refer to Section 1.6 and Table 1.6-3. Controlled drawings were removed from the USAR at Revision 17 and are considered incorporated by reference.

Figure #	Sheet	Title	Drawing #*
9.3-5	5	Control and Diesel Generator Bldg. Oily Waste System	M-12LE02
9.3-5	6	Turbine Bldg. and Aux. Boiler Room Oily Waste System	M-12LE03
9.3-5	7	Tendon Access Gallery and Turbine Bldg. Oily Waste System	M-12LE04
9.3-5	8	Auxiliary Building Floor and Equipment Drain (FED) System	M-12LF01
9.3-5	9	Auxiliary Building Floor and Equipment Drain System	M-12LF02
9.3-5	10	Auxiliary Building Floor and Equipment Drain System	M-12LF03
9.3-5	11	Auxiliary Building Floor and Equipment Drain System	M-12LF04
9.3-5	12	Auxiliary Building Floor and Equipment Drain System	M-12LF05
9.3-5	13	Radwaste and Fuel Bldgs. FED System	M-12LF06
9.3-5	14	Radwaste Bldg. FED System	M-12LF07
9.3-5	15	Control and Fuel Bldgs. FED System	M-12LF08
9.3-5	16	Reactor Bldg. and Hot Machine Shop FED System	M-12LF09
9.3-5	17	Radwaste Bldg. and Tunnel FED System	M-12LF10
9.3-6	1	Major Drainage Areas	
9.3-6	2	Floor Drain for Safety-Related Rooms Aux. Building Basement	
9.3-7	1	Reactor Building, Stainless Steel Liner Plate, Reactor Refueling Canal	C-0L2931
9.3-7	2	Fuel Building-Area 1, Stainless Steel Liner Plate Plan, Spent Fuel Pool	C-1L6111
9.3-8	1	Chemical and Volume Control System	M-12BG01
9.3-8	2	Chemical and Volume Control System	M-12BG02
9.3-8	3	Chemical and Volume Control System	M-12BG03
9.3-8	4	Chemical and Volume Control System	M-12BG04
9.3-8	5	Chemical and Volume Control System	M-12BG05
9.3-9	1	Service Gas System	M-12KH01
9.3-9	2	Service Gas System	M-12KH02
9.3-10	0	Gas Supply Location/Interface	
9.3-11	1	Boron Recycle System	M-12HE01
9.3-11	2	Boron Recycle System	M-12HE02
9.3-11	3	Boron Recycle System	M-12HE03
9.4-1	1	Control Building HVAC	M-12GK01
9.4-1	2	Control Building HVAC	M-12GK02
9.4-1	3	Control Building HVAC	M-12GK03
9.4-1	4	Control Building HVAC	M-12GK04
9.4-1	5	Control Building HVAC	M-12GK05
9.4-2	1	Fuel Building HVAC	M-12GG01
9.4-2	2	Fuel Building HVAC	M-12GG02

CHAPTER 9 - LIST OF FIGURES

*Refer to Section 1.6 and Table 1.6-3. Controlled drawings were removed from the USAR at Revision 17 and are considered incorporated by reference.

Figure #	Sheet	Title	Drawing #*
9.4-3	1	Miscellaneous Buildings HVAC	M-12GF01
9.4-3	2	Miscellaneous Buildings HVAC	M-12GF02
9.4-3	3	Auxiliary Building HVAC	M-12GL03
9.4-3	4	Auxiliary Building HVAC	M-12GL02
9.4-3	5	Auxiliary Building HVAC	M-12GL01
9.4-4	1	Turbine Building HVAC	M-12GE01
9.4-4	2	Turbine Building HVAC	M-12GE02
9.4-4	3	Turbine Building HVAC	M-12GE03
9.4-4	4	Turbine Building HVAC	M-12GE04
9.4-5	1	Radwaste Building HVAC	M-12GH01
9.4-5	2	Radwaste Building HVAC	M-12GH02
9.4-6	1	Containment Cooling System	M-12GN01
9.4-6	2	Containment Cooling System	M-12GN02
9.4-6	3	Containment Atmospheric Control System	M-12GR01
9.4-6	4	Containment Purge Systems HVAC	M-12GT01
9.4-7	0	Diesel Generators Building HVAC	M-12GM01
9.4-8	0	Essential Service Water Pump House HVAC	M-K2GD01
9.4-9	1	Plant Heating System	M-12GA01
9.4-9	2	Plant Heating System	M-12GA02
9.4-10	0	Central Chilled Water System	M-12GB01
9.4-11	0	Waste Water Treatment Facility HVAC	M-12VW01
9.5-1	1	Fire Protection System (site)	M-0023 Sheet 1
9.5-1	2	Fire Protection System (site)	M-0023 Sheet 2
9.5-1	3	Fire Protection System (site)	M-0023 Sheet 3
9.5-1	4	Fire Protection System (site)	M-0023 Sheet 4
9.5-2	0	Outdoor Piping, Key Plan and General Notes	M-0051
9.5-3	0	ESW Pump House Fire Protection	
9.5.1-1	1	Fire Protection Turbine Building	M-12KC01
9.5.1-1	2	Fire Protection System (power block)	M-12KC02
9.5.1-1	3	Fire Protection System (power block)	M-12KC03
9.5.1-1	4	Fire Protection (Halon) System	M-12KC04
9.5.1-1	5	Fire Protection System (power block)	M-12KC05
9.5.1-1	6	Fire Protection (Halon) System	M-12KC06
9.5.1-1	7	Fire Protection (Halon) System	M-12KC07
9.5.1-2	1	Fire Area Delineation el. 1974’	10466-A-1801
9.5.1-2	2	Fire Area Delineation el. 2000’	10466-A-1802
9.5.1-2	3	Fire Area Delineation el. 2026’	10466-A-1803
9.5.1-2	4	Fire Area Delineation el. 2047’-6”	10466-A-1804
9.5.1-3	1	Reactor Coolant Pump Lube Oil Collection System	
9.5.1-3	2	Reactor Coolant Pump Lube Oil Collection System	

CHAPTER 9 - LIST OF FIGURES

*Refer to Section 1.6 and Table 1.6-3. Controlled drawings were removed from the USAR at Revision 17 and are considered incorporated by reference.

Figure #	Sheet	Title	Drawing #*
9.5.2-1	0	Telephone System Riser Diagram	E-14QE01
9.5.2-2	0	Public Address System Riser Diagram	E-1L9903
9.5.3-1	0	Lighting Distribution Riser Diagram	E-1L9901
9.5.4-1	0	Emergency Fuel Oil System	M-12JE01
9.5.5-1	1	Standby Diesel Generator "A" Cooling Water System	M-12KJ01
9.5.5-1	2	Standby Diesel Generator "B" Cooling Water System	M-12KJ04
9.5.6-1	1	Standby Diesel Generator "A" Intake, Exh., F.0. and Starting Air System	M-12KJ02
9.5.6-1	2	Standby Diesel Generator "B" Intake, Exh., F.0. and Starting Air System	M-12KJ05
9.5.7-1	1	Standby Diesel Generator "A" Lube Oil System	M-12KJ03
9.5.7-1	2	Standby Diesel Generator "B" Lube Oil System	M-12KJ06
9.5.9-1	1	Auxiliary Boiler System	M-12FA01
9.5.9-1	2	Auxiliary Steam System	M-12FB01
9.5.9-1	3	Auxiliary Steam System	M-12FB02
9.5.9-1	4	Auxiliary Steam Chemical Addition System	M-12FE01
9.5.10-1	1	Breathing Air System	M-12KB01
9.5.10-1	2	Breathing Air System	M-12KB02
9.5.10-1	3	Breathing Air System	M-12KB03

CHAPTER 9.0

AUXILIARY SYSTEMS

This chapter provides information concerning the auxiliary systems included in the WCGS powerblock. Those systems that are essential for the safe shutdown of the plant or the protection of the health and safety of the public are identified. The description of each system, the design bases for the system and for critical components, a safety evaluation demonstrating how the system satisfies the design bases, the testing and inspection to be performed to verify system capability and reliability, and the required instrumentation and controls are provided. Those aspects of the auxiliary systems that have little or no relationship to protection of the public against exposure to radiation are described in enough detail to allow understanding of the auxiliary system design and function. Emphasis is placed on those aspects of design and operation that might affect the reactor and its safety features or contribute to the control of radioactivity.

The capability of the system to function without compromising the safe operation of the plant under both normal operating or transient situations is clearly shown by the information provided, i.e., a failure analysis.

9.1 FUEL STORAGE AND HANDLING

The power block has its own fuel storage and handling facility. The onsite fuel storage and handling facilities are designed to accommodate both new and spent fuel assemblies.

9.1.1 NEW FUEL STORAGE

A new fuel storage facility (NFSF) is located within the fuel building, and provides onsite dry storage for 66 new fuel elements (approximately one-third core).

9.1.1.1 Design Bases

The NFSF maintains the new fuel elements in a subcritical array during all postulated design basis events.

9.1.1.1.1 Safety Design Bases

SAFETY DESIGN BASIS ONE - The NFSF is protected from the effects of natural phenomena, including earthquakes, tornadoes, hurricanes, floods, and external missiles (GDC-2).

SAFETY DESIGN BASIS TWO - The NFSF will perform its intended function and maintain structural integrity after an SSE or following a postulated hazard, such as fire, internal missiles, or pipe break (GDC-3 and 4).

SAFETY DESIGN BASIS THREE - Components of the NFSF are not shared with other units (GDC-5).

SAFETY DESIGN BASIS FOUR - The NFSF is designed to store reactor core fuel assemblies in a subcritical array (GDC-62).

SAFETY DESIGN BASIS FIVE - The NFSF meets the requirements of 10 CFR 73.40, 10 CFR 73.55, and 10 CFR 73.60, which require physical protection of special nuclear material while in storage.

SAFETY DESIGN BASIS SIX - The NFSF, including the new fuel storage racks, precludes insertion of new fuel assemblies in other than prescribed locations within the NFSF.

SAFETY DESIGN BASIS SEVEN - The new fuel storage racks are designed for the following loads and combinations thereof:

a. Dead loads

b. Live loads (fuel assemblies)

c. Crane uplift load (maximum of 5,000 pounds)

d. Safe shutdown earthquake loads

e. Operating basis earthquake loads

SAFETY DESIGN BASIS EIGHT - The NRC issued an exemption to the requirements of 10CFR70.24 to WCNOC on June 24, 1997. On November 12, 1998 the NRC issued 10CFR50.68, which provides eight criteria that may be followed in lieu of criticality monitoring per 10CFR70.24. One of these criteria require that radiation monitors are provided in storage areas when fuel is present to detect excessive radiation levels. Monitors meeting the provisions of GDC-63 are provided in the NFSF area to provide prompt warning of high radiation.

SAFETY DESIGN BASIS NINE - The capability to inspect the NFSF is provided (GDC-61).

9.1.1.1.2 Power Generation Design Basis

There are no power generation design bases associated with the NFSF.

9.1.1.2 Facility Description

The NFSF is a separate and protected area containing fuel storage racks, and is enclosed by a reinforced concrete structure with an associated steel plate top containing hinged openings covering each fuel assembly. The concrete vault is described in Section 3.8. Drainage is provided to prevent accumulation of water within the vault. The new fuel storage racks are carbon steel support structure with stainless steel guides where the rack comes into contact with the fuel assembly. New fuel assemblies are received, inspected, and stored in the new fuel storage racks in the NFSF or in the Fuel Storage Pool. A total of 66 new fuel assemblies can be stored in the NFSF racks in a lattice array having a minimum center-to-center distance of 21 inches in both horizontal directions. The NFSF is shown in Figures 1.2-20 and 1.2-21. Figure 9.1-1 shows a typical new fuel storage rack module.

The new fuel storage rack modules are designed and fabricated as four vertical continuous cells for the storage of fuel assemblies. The cells are continuous stainless steel tubes to ensure good vertical alignment and stability for the fuel assemblies in storage position. Design, fabrication, and installation of the new fuel storage racks are based on the ASME Code specifications. Stresses in a fully loaded rack are below the design stress level defined in the ASME Code, Section III, Appendix XVII. The new fuel storage racks are designed to seismic Category I criteria, and are anchored to the seismic Category I floor and walls of the NFSF.

The criticality analysis (Reference 5) shows that the spacing between fuel assemblies in the storage racks is sufficient to maintain the array in a subcritical condition, even when fully loaded. New fuel is stored in 21-inch, center-to-center racks in the NFSF, with no water present, but which are designed to prevent accidental criticality even if unborated water is present. For the flooded condition, assuming new fuel of the highest anticipated enrichment in place, the effective multiplication factor does not exceed 0.95. The maximum enrichment that may be stored in the NFSF is 5.0 w/o U-235]. The effective multiplication factor does not exceed 0.98 with fuel of the highest anticipated enrichment in place, assuming possible sources of moderation, such as aqueous foam or mist.

In the analysis for the storage facilities, the fuel assemblies are assumed to be in their most reactive condition, namely fresh or undepleted, and with no control rods or removable neutron absorbers present. Credit is taken for the inherent neutron-absorbing effect of materials of construction for the racks.

Assemblies cannot be closer together than the design separation provided by the storage facility, except in special cases such as in fuel shipping containers where analyses are carried out to establish the acceptability of the design. The mechanical integrity of the fuel assembly is assumed.

Section 9.1.4 provides an evaluation to demonstrate that the new fuel storage racks can withstand a maximum crane uplift force of 5,000 pounds. A dropped fuel assembly cannot impact the racks, since a steel cover is provided over the new fuel storage area.

To further ensure that no fuel can be damaged, each storage cell is designed to prevent any portion of a fuel assembly or core component (e.g., control rods) from extending above support or guiding surfaces of the storage cell. See Table 9.1-1 for the design data for the NFSF.

9.1.1.3 Safety Evaluation

The safety evaluations given below correspond to the safety design bases in Section 9.1.1.1.1.

SAFETY EVALUATION ONE - The NFSF is located in the fuel building. The fuel building is designed to withstand the effects of earthquakes, tornadoes, hurricanes, floods, external missiles, and other appropriate natural phenomena. Sections 3.3, 3.4, 3.5, 3.7(B), and 3.8 provide the bases for the adequacy of the structural design of the building.

SAFETY EVALUATION TWO - The NFSF is designed to remain functional after an SSE. Sections 3.7(B).2 and 3.9(B) provide the design loading conditions that were considered. Sections 3.5, 3.6, and 9.5.1 provide the hazards analyses to assure that the facility is properly protected.

SAFETY EVALUATION THREE - The power block has an NFSF capable of storing one-third of a core. No sharing is necessary.

SAFETY EVALUATION FOUR - The criticality analysis (Reference 5) demonstrates that a 21-inch (square pitch) center-to-center storage spacing of fuel assemblies in both horizontal directions ensures the subcriticality of new fuel assemblies within the NFSF.

SAFETY EVALUATION FIVE - The new fuel may be stored in a totally enclosed vault with reinforced concrete walls and a steel plate top. The new fuel storage vault is located within the fuel building. The security measures taken for the protection of the new fuel against industrial sabotage and theft are discussed in the Physical Security Plan.

SAFETY EVALUATION SIX - A steel checker plate cover is provided over the entire new fuel storage concrete vault. Hinged covers are provided directly over each fuel storage position. The covers and fuel racks are sized to prevent insertion of a fuel assembly in other than its prescribed location.

SAFETY EVALUATION SEVEN - The new fuel storage racks, loaded with fuel, are designed to minimize the distortion or buckling of rack arrangements. Stresses in the fully loaded racks do not exceed stresses specified by the ASME Code, Section III, Appendix XVII. This condition ensures a $k_{eff} \leq 0.98$. The new fuel storage equipment is designed to meet seismic Category I requirements. The crane hookup to the new fuel assemblies is done manually and under administrative control. The new fuel storage racks are designed to withstand a maximum uplift force of 5,000 pounds. The impact load of a dropped fuel assembly is taken by the checker plate covering the new fuel assemblies. The checker plate has been analyzed and determined capable of sustaining the maximum fuel assembly drop.

The probability of a dropped mass accident occurring is remote since:

a. New fuel storage racks in the new fuel storage vault are protected from dropped objects by a steel protective cover.

b. Safe handling features, as described in Section 9.1.4, are incorporated into the new fuel assembly handling tools.

SAFETY EVALUATION EIGHT - As described in Section 9.1.1.5, a monitoring system is provided to initiate an audible alarm if high radiation occurs.

SAFETY EVALUATION NINE - As described in Section 9.1.1.4, the NFSF is accessible for periodic inspection.

9.1.1.4 Tests and Inspections

The NFSF requires no shielding and is completely accessible to plant personnel. Prior to initial use, the new fuel storage racks and modules were inspected to ensure the absence of any binding using a dummy assembly. For each cell, the dummy assembly was inserted and removed. Thereafter, the cells are periodically inspected.

9.1.1.5 Instrumentation Application

As described in Section 12.3.4, two area radiation monitors are provided near the NFSF which will provide a distinct audible and visual alarm to alert personnel in the vicinity. The monitors provide a hi-hi radiation alarm at 15 mrem/hr which will give prompt warning of high radiation. These monitors are provided in accordance with GDC-63.

Criticality is precluded from occurring, however, by design and proper operation of the fuel handling system, as described in Section 9.1.4.

9.1.2 SPENT FUEL STORAGE AND TRANSFER

A fuel storage facility (FSF) is located within the fuel building and provides onsite storage for spent fuel elements. Fuel storage racks are located in the fuel storage pool, which is constructed of reinforced concrete with a stainless steel lining and is an integral part of the fuel building. The fuel storage pool consists of the spent fuel pool and the cask loading pool (with optional fuel storage racks installed). The fuel storage pool provides a cooling and shielding medium for the spent fuel. The facility provides protection for spent fuel assemblies under conditions such as tornadoes, hurricanes, earthquakes, and flooding and provides an efficient method for safe and reliable fuel handling operations within the fuel storage pool.

Onsite storage of spent fuel is also provided by the Independent Spent Fuel Storage Facility (ISFSI) under the general license provisions of 10 CFR 72, Subpart K. The ISFSI provides onsite spent fuel storage capacity in addition to the FSF to ensure sufficient onsite storage capacity to accommodate plant operation through end of plant life and maintain full core offload capability in the FSF. WCNOC has selected the NUHOMS® EOS system for this purpose.

After a sufficient cooling period, spent fuel assemblies are transferred from the storage racks to a dry shielded canister housed in a transfer cask located in the cask loading pool. The EOS dry shielded canister has a capacity of 37 storage locations. Once loaded, the transfer cask is moved to the cask washdown pit for decontamination and top closure operations. Subsequently, the transfer cask is removed from the cask washdown pit and downended onto a transfer trailer located in the truck bay of the fuel building. The transfer trailer is moved from the fuel building to the ISFSI storage pad. The transfer cask with support skid is removed from the transfer trailer by the loading crane, the transfer cask is then aligned with and docked at the horizontal storage module, and the sealed dry storage canister is inserted into the horizontal storage module via a hydraulic ram. Refer to the NUHOMS® EOS System UFSAR, Docket 72-1042 for details of this storage system regarding detailed description, design bases and safety evaluation.

9.1.2.1 Design Bases

The FSF is safety related, and is required to ensure a subcritical array during all normal, abnormal, and accident conditions. It also provides a shielding and cooling medium for the spent fuel.

9.1.2.1.1 Safety Design Bases

SAFETY DESIGN BASIS ONE - The FSF is capable of withstanding the effects of natural phenomena, such as earthquakes, tornadoes, hurricanes, floods, and external missiles (GDC-2).

SAFETY DESIGN BASIS TWO - The FSF is designed to maintain structural integrity after an SSE to perform its intended function following a postulated hazard, such as fire, internal missiles, or pipe break. The FSF uses the design and fabrication codes commensurate with Category I structures and the seismic category assigned by Regulatory Guide 1.29 (GDC-3 and 4).

SAFETY DESIGN BASIS THREE - Components of this system are not shared with other units (GDC-5).

SAFETY DESIGN BASIS FOUR - The fuel storage pool is designed to maintain fuel assemblies in a subcritical array with $k_{eff} \leq 0.95$ when fuel assemblies are inserted into prescribed locations (GDC-62).

SAFETY DESIGN BASIS FIVE - The fuel handling area and equipment are designed to prevent a drop of an unacceptable object into the fuel storage pool. The FSF is designed to prevent the loss of cooling water within the pool that could uncover the stored fuel or prevent cooling capability. A redundant seismic Category I emergency makeup water supply is provided. The fuel building is a controlled air leakage facility.

SAFETY DESIGN BASIS SIX - The fuel storage racks are designed for the following loads and combinations thereof:

a. Dead loads

b. Live loads (fuel assemblies)

c. Crane uplift load (the spent fuel pool bridge crane - 2 tons)

d. Safe shutdown earthquake loads

e. Operational basis earthquake loads

f. Thermal loads

g. Fuel assembly drop load

h. Spent fuel pool transfer gate drop load

SAFETY DESIGN BASIS SEVEN - The FSF is designed to meet the requirements of 10 CFR 73.55 and 10 CFR 73.60, which require physical protection of special nuclear material while in storage.

SAFETY DESIGN BASIS EIGHT - The fuel storage racks are constructed so as to preclude insertion of spent fuel assemblies into other than prescribed storage locations. If a fuel assembly is accidentally lowered or dropped onto the top of the racks or into the annular space between the spent fuel racks and the pool wall, subcriticality is maintained in all cases with a shutdown margin of at least 0.05 ($k_{eff} \leq 0.95$).

SAFETY DESIGN BASIS NINE - The NRC issued an exemption to the requirements of 10CFR70.24 to WCNOC on June 24, 1997. On November 12, 1998 the NRC issued 10CFR50.68, which provides eight criteria that may be followed in lieu of criticality monitoring per 10CFR70.24. One of these criteria require that radiation monitors are provided in storage areas when fuel is present to detect excessive radiation levels. Monitors meeting the provisions of GDC-63 are provided in the FSF area to provide prompt warning of high radiation.

SAFETY DESIGN BASIS TEN - The capability to inspect the SFSF is provided (GDC-61).

9.1.2.1.2 Power Generation Design Bases

POWER GENERATION DESIGN BASIS ONE - Shielding for the FSF is sufficient to prevent exposure of the plant personnel to radiation levels greater than 2.5 mrem/hr during normal operations and 10 mrem/hr during fuel handling operations, except where appropriate access controls are implemented. Gaseous radioactivity above the spent fuel pool is maintained below the limits, as defined in Table 1, Column 1 of Appendix B to 10 CFR 20.

POWER GENERATION DESIGN BASIS TWO - A leak chase and collection system is provided for the detection of leaks in the spent fuel pool liner plate.

POWER GENERATION DESIGN BASIS THREE - Borated demineralized reactor makeup water may be used to fill and to supplement water inventory in the spent fuel pool. Boration is not essential for maintaining the subcriticality of the stored fuel assemblies. An alternate source of makeup water is supplied from the refueling water storage tank.

POWER GENERATION DESIGN BASIS FOUR - Fuel handling devices have provisions to avoid dropping or jamming of fuel assemblies and to avoid applying or carrying improper loads during the transfer operation.

POWER GENERATION DESIGN BASIS FIVE - Cranes and hoists which are used to lift spent fuel have a maximum lift height so that the minimum required depth of water is maintained for shielding. In addition to crane and hoist limitations, a long-handled tool is utilized when handling spent fuel.

9.1.2.2 Facilities Description

The fuel storage pool provides storage space for irradiated spent fuel. The fuel storage pool is a reinforced concrete structure with a stainless steel liner having a normal water volume of approximately 55,260 cubic feet (413,400 gallons). The fuel storage pool water is borated to a concentration of no less than 2165 ppm. Figures 1.2-20 through 1.2-22 depict the storage facility. Figure 9.1-2 is a possible fuel storage rack arrangement. See Table 9.1-2 for design data for the fuel storage pool.

When Wolf Creek received its low power operating license in September 1985, the spent fuel pool was authorized to store no more than 1344 fuel assemblies to be located in 12 spent fuel storage racks in the spent fuel pool. With the NRC approval of the Wolf Creek storage pool rerack amendment in 1999, and with the completion of the rerack modification to the spent fuel pool, Wolf Creek's expanded storage space is increased to a capability to store 2363 fuel assemblies. The modification replaced the original 12 fuel storage racks with 15 high density storage racks in the spent fuel pool. Additional capability to add three high density storage racks within the cask loading pool could be made available with supporting evaluations, during a future campaign. The three high density racks within the cask loading pool would be capable of storing 279 fuel assemblies.

Under the high density storage design, the fuel storage pool can be defined as a Mixed Zone Three Region (MZTR) storage configuration. Fuel Storage configuration patterns are setup using administrative controls to establish storage areas specifically designated for low burnup fuel, including fresh (unburned) fuel. Selected configurations ensure that a full core discharge can be accommodated with some allowance for other fuel assemblies that could also require Region 1 storage. Cells reserved for storage of fresh fuel, and spent fuel without any burnup limitations is designated as Region 1. Region 2 and 3 cells have associated minimum burnup requirements for unrestricted fuel storage. The MZTR storage configurations are described in Appendix 9.1A. As an alternative to MZTR storage, Region 1 fuel storage may be accomplished in a checkerboard pattern without any enrichment/burnup restrictions.

The new racks have a closer assembly to assembly spacing to allow for more fuel storage capability. The rack modules are designed as cellular structures such that each fuel assembly has a square opening with conforming lateral support and a flat horizontal bearing surface. The design maximizes structural integrity while minimizing inertial mass. Each rack assembly is supported by four legs which are remotely adjustable. Therefore, the racks can be made vertical and the tops of the racks can easily be made co-planer with each other. The rack module support legs are engineered to accommodate undulations in the pool floor flatness. A bearing pad is interposed between the rack pedestals and the pool liner. It serves to diffuse the dead load of the loaded racks into the reinforced concrete structure of the pool slab. The composite box subassembly, baseplate, and support legs constitute the principle components of the rack module.

The rack modules are free-standing and self supporting. They are primarily made from Type 304L austenitic stainless steel in a prismatic array interconnected through longitudinal welds. They are separated by a gap of approximately 1.5 inches from one another. Along the pool walls, a nominal gap is provided which varies for each wall. The minimum allowable cell to wall dimension is ¾ inches and the maximum nominal dimension is 7.57 inches.

The racks contain Boral as an active neutron absorber. The Boral provides fixed neutron absorbtion for primary reactivity control in the high density racks. The Boral absorbers in the racks have been sized to sufficiently shadow the active fuel height of all fuel assembly designs stored in the pool.

The criticality analysis (including the associated assumptions and input parameters) given in Appendix 9.1A shows that the spacing between fuel assemblies in the storage racks is sufficient to maintain the array, when fully loaded and flooded with nonborated water, in a subcritical condition, i.e., k_{eff} of less than 0.95.

This is based upon fuel with an original enrichment of 5.00 weight percent U-235 with at least 16 IFBA rods or 4.6 percent U-235 without IFBA. Fresh unirradiated fuel assemblies are either stored in the NFSF or in Region 1 of an MZTR or checkerboard configuration in the fuel storage pool (or both). Appendix 9.1A provides a discussion of the criticality analysis for the fresh unirradiated fuel stored wet in the fuel storage pool.

Burnable poison rod assemblies, unirradiated rod control clusters, and thimble plug devices are normally stored in the fuel assemblies in the spent fuel pool. Items such as damaged fuel inserts, burnable poison rods, and other debris from fuel reconstitution may be stored in a container located in the fuel storage pool.

The fuel storage rack configuration does not prevent accidental lowering or dropping of a fuel assembly across the top of the racks or into the space between the racks and the pool wall. Criticality under these conditions is addressed in Safety Evaluation Eight. To further assure that no fuel can be damaged, each storage cell is designed to prevent any portion of a fuel assembly or core component from extending above the top of the rack. The fuel storage racks are also designed to withstand the impact resulting from a falling fuel assembly under normal loading and unloading conditions and are designed to meet seismic Category I requirements. Design, fabrication, and installation of the fuelstorage pool racks are based on applicable ASME Codes. Allowable stresses are expressed as percentages of yield stresses obtained from Section III of the ASME Code.

The structural, seismic, criticality, and thermal hydraulic analyses (including the associated assumptions and input parameters) given in Appendix 9.1A show that the racks are designed so that subcriticality is maintained during all normal, abnormal, or accident conditions.

The fuel storage racks installed in the fuel storage pool were designed and manufactured by Holtec International. The rack modules are freestanding on the floor liner plate of the spent fuel pool. Time-history seismic analyses have been performed and demonstrate that no lateral supports from the pool walls or fastenings to the pool floor are required. The supports for the racks are sufficiently large in area to prevent damage to the spent fuel pool liner and floor leakchase system from concentrated loads.

The rack modules are constructed from stainless steel square tubes arranged in an alternating pattern such that the connection of the tube corners from storage cells. A Boral (aluminum and boron carbide) panel centered on each side is attached to the walls of the stainless steel tubes by a stainless steel sheathing. Peripheral cells use a stainless steel sheathing on the outside wall to attach the Boral panel. The fuel assemblies are nominally located in the center of each storage cell on a nominal lattice spacing of approximately 8.99 inches. Each storage cell has a hole in or near the bottom and a rectangular opening on the top of the cell to allow cooling water to flow through the storage cell. The size of the openings precludes blockage by any crud accumulations.

Adjacent to the spent fuel pool are two small pools and a washdown pit. One pool is the fuel transfer canal which has a normal water volume of approximately 13,990 cubic feet (104,659 gallons) and is connected to the refueling pool (inside the containment) by the fuel transfer tube. A leaktight gate is provided to separate the fuel storage pool and the fuel transfer canal. This allows the fuel transfer canal to be drained for maintenance of the fuel transfer system mechanisms.

The second pool is the spent fuel shipping cask loading pool, which has a normal water volume of approximately 12,200 cubic feet (91,268 gallons). It is designed for loading spent fuel assemblies into the spent fuel shipping cask for off-site transport or the transfer cask when storing spent fuel at the ISFSI. A leaktight gate is provided to separate the spent fuel pool from the cask loading pool in the event that the cask loading pit is drained. When fuel storage racks are installed in the cask loading pool, and the cask loading pool leaktight gate, which separates the cask loading pool from the spent fuel pool is permanently opened, the cask loading pool becomes part of the fuel storage pool. Since the cask loading pool is deeper than the spent fuel pool. Platforms will be installed beneath the cask loading pool racks to allow installation at the same elevation as the spent fuel pool racks.

For cask loading operations associated with the ISFSI, the optional spent fuel racks are not installed in the cask loading pool. The transfer slot gate between the spent fuel pool and the cask loading pool is removed (i.e., normal configuration), such that the water volumes between the spent fuel pool and cask loading pool are commingled. When placing the transfer cask in the cask loading pool, the water level in the fuel storage pool is initially adjusted to accommodate changes in level due to the displacement caused by the transfer cask, while maintaining water level within the HI and LO alarm setpoints. Spent fuel assemblies are transferred from the spent fuel pool racks to the transfer cask located in the cask loading pool. As spent fuel is removed over the course of a loading campaign, water addition may be necessary to maintain pool level within the alarm setpoints.

During ISFSI fuel loading operations, the fuel pool cooling and cleanup system described in section 9.1.3 operates under normal conditions providing cooling to the spent fuel located in the transfer cask, and purification to remove impurities from the water to improve visual clarity for both the spent fuel pool and the cask loading pool; and minimize radiation dose to operations personnel. The combined water volume is borated to the requirements of the NUHOMS® EOS System Technical Specifications, where the minimum soluble boron concentration varies up to 2,500 ppm based on fuel parameters, and therefore may exceed the minimum concentration of 2,165 ppm specified for the spent fuel pool.

Under the provisions of 10 CFR 50.68(c), the criticality requirements of 10 CFR 50.68(b) do not apply to the spent fuel placed within the transfer cask. Subcritical conditions are maintained by use of fixed neutron absorbers in the basket assembly of the dry shielded canister housed within the transfer cask, and presence of soluble boron in the spent fuel pool. The criticality analyses provided in the NUHOMS® EOS System UFSAR demonstrates that the spacing between the fuel assemblies in the basket assembly of the dry shielded canister is sufficient to maintain the array, when fully loaded and flooded with borated water per the requirements of the NUHOMS® EOS System Technical Specifications, in a subcritical condition less than the upper subcriticality limit (USL).

For fuel handling activities in the cask loading pool, the drop of a fuel assembly is possible. Similar to the description provided above for fuel assembly drops in the spent fuel pool, a fuel assembly drop can occur above the open transfer cask in the vertical configuration with the fuel assembly falling down into a storage cell of the basket assembly, or landing on the top of the basket assembly. A vertical drop could also occur outside of the transfer cask, when the fuel assembly is in transit between the transfer slot and transfer cask. A drop of a fuel assembly in the horizontal configuration can occur with the fuel assembly coming to rest across the top flange of the transfer cask. For these fuel drop events the criticality analyses are not adversely affected, since the spacing between storage cells in the basket remains unchanged and the neutron absorber material remains intact. The

radiological consequences evaluated in section 15.7.4 for a fuel assembly drop in the spent fuel pool bound these fuel drop events in the cask loading pool.

During ISFSI unloading operations in the cask loading pool to retrieve the spent fuel stored at the ISFSI, the same conditions apply, essentially in the reverse order.

The concrete structures for the refueling pool, spent fuel pool, cask loading pool, and fuel transfer canal are designed in accordance with the criteria for seismic Category I structures contained in Sections 3.7(B) and 3.8. As such, they are designed to maintain leaktight integrity to prevent the loss of cooling water from the pools. In the event of a loss of integrity of the watertight gate, while one of the small pools is drained, a minimum of 10 feet of water is maintained above the top of the fuel. In addition, all piping penetrations into the pool are designed to preclude draining the pool down to an unacceptable limit, as described in Section 9.1.3.

For the purpose of providing an easily decontaminable surface and to provide a construction form for the concrete pour, a liner plate surface which serves no safety function is provided for these pools.

The liner plate is fabricated from 1/4-inch 304L stainless steel, which has been hot rolled, annealed, pickled, and then cold rolled to provide a smooth finish. The joint welds are provided with a leakchase system for initial testing and subsequent monitoring of weld integrity. Following installation and testing, a breach of the liner plate (which could result in any significant loss of water through the leakchase system) is not considered credible.

A monitoring system is provided for the leakchase system, as described in Section 9.3.3. Any water collected is directed to the floor and equipment drain system and transferred to the liquid radwaste system for processing.

The liner plate is anchored to the concrete walls by welding to steel angles which are embedded in the concrete. An analysis has been performed which demonstrates that the liner plate will not, as a result of an SSE, break away from the walls and fall on top of the fuel storage racks. Consequently, the liner plate is prevented from either inflicting mechanical damage to the spent fuel or from blocking the flow of cooling water around the fuel. The watertight gates are also seismically designed to preclude their failure during an SSE and falling onto the fuel storage racks.

If weld repair of the liner plate is made in the future, the repair will be in accordance with the following:

a. Materials used, including weld rod, will be verified in accordance with ASTM specifications or equivalent

b. Repair procedures will be in accordance with the original fabrication specifications or equivalent

c. Welders will be qualified in accordance with ASME Section IX or equivalent

d. Non-destructive examination of the weld repairs will be in accordance with the original fabrication specification or equivalent

Should repairs be necessary with water in the fuel pool, special procedures may be required and modifications to the above criteria may be required due to the particular circumstances.

The fuel pool cooling and cleanup system functions to limit the fuel storage pool temperature to 140°F during normal plant conditions; remove impurities from the water to improve visual clarity; and limit the radiation dose to the operating personnel to 2.5 mrem/hr during normal operations and 10 mrem/hr during refueling operations. The above dose rates consider the contribution from spent fuel and the fuel storage pool water. No other radioactive equipment that would significantly contribute to the dose rate is stored in the pool. A description of the fuel storage pool cooling and cleanup system is provided in Section 9.1.3.

The fuel transfer tube is completely shielded with permanent shielding to within radiation zone limits. No special access control, radiation monitoring, or posting is required.

The expansion bellows for the fuel transfer tube are under water in the fuel transfer canal in the fuel building (see revised Figure 3.8-48). There is no bellows inspection room or opening. The fuel transfer tube is completely surrounded by concrete or water, with the exception of the seismic gaps, so that no personnel access is possible.

The fuel transfer tube in the seismic gap between the containment wall and the internal containment structure and in the seismic gap between the containment wall and the fuel building is shielded, using permanently installed lead loaded silicone foam rubber, to meet the radiation zone limits (Figure 12.3-2). Therefore, there is no unshielded portion of the fuel transfer tube. See Section 12.2.1.3.1 for additional information.

Section 9.1.4 discusses the load-bearing capability of all of the cranes serving the FSF. Section 9.1.4 also provides an evaluation which demonstrates that the maximum uplift force is due to the spent fuel pool bridge crane and the maximum impact load that is due to a dropped fuel assembly. The racks are designed to withstand these loads with no increase in k_{eff}.

9.1.2.3 Safety Evaluations

The safety evaluations given below correspond to the safety design bases in Section 9.1.2.1.1.

SAFETY EVALUATION ONE - The FSF is located in the fuel building. The fuel building is designed to withstand the effects of earthquakes, tornadoes, hurricanes, floods, external missiles, and other appropriate natural phenomena. Sections 3.3, 3.4, 3.5, 3.7(B), and 3.8 provide the bases for the adequacy of the structural design of these buildings.

SAFETY EVALUATION TWO - The FSF is designed to remain functional after an SSE. Appendix 9.1A provides the design loading conditions that were considered. Sections 3.5, 3.6, and 9.5.1 provide the hazards analyses to assure that the facility is properly protected.

SAFETY EVALUATION THREE - The plant has a FSF capable of storage of 2363 fuel assemblies, with the capability of ultimately expanding to 2642 fuel assemblies pending addition of storage racks in the Cask Loading Pool and the supporting evaluations, during a future campaign.

SAFETY EVALUATION FOUR - The criticality analyses described in Appendix 9.1A demonstrate that the MZTR loading configuration or alternate Region 1 checkerboard pattern configuration satisfies the subcriticality condition,

assuming fresh fuel of up to 5.0 weight percent enrichment with sixteen IFBAs (4.6 weight percent without IFBAs) and unborated water in the pool.

Procedures and precautions described in Appendix 9.1A are employed to ensure that each fuel assembly has achieved the burnup VS initial enrichment that is specified in Appendix 9.1A before it is stored in Region 2 or Region 3 in the fuel storage pool.

SAFETY EVALUATION FIVE - As described in Section 9.1.2.2, the spent fuel is stored within a concrete pool which has no penetrations which can result in an unacceptable loss of water. As described in Section 9.1.3, a system provides cooling and emergency makeup water for the spent fuel pool. Section 9.4.6 describes the ventilation system provided for the fuel building. Table 9.1-3 indicates compliance with Regulatory Guide 1.13 positions.

SAFETY EVALUATION SIX - The structural, seismic, criticality, and thermal-hydraulic analyses provided in Appendix 9.1A demonstrate that the fuel storage racks are designed to withstand normal, abnormal, and accident conditions without causing a decrease in the degree of subcriticality. Section 9.1.4 evaluates the bases for external loads on the fuel storage racks. The probability of a dropped mass accident occurring is remote because of the safe handling features described in Section 9.1.4.

SAFETY EVALUATION SEVEN - The spent fuel is stored within a reinforced concrete wall pool in the fuel building. The security measures taken for the protection of the new and spent fuel against industrial sabotage and theft are discussed in the Physical Security Plan.

SAFETY EVALUATION EIGHT - Criticality analyses, described in Appendix 9.1A, show that if a fuel assembly is dropped on top of the racks or into the gap between the racks and the pool wall, the subcriticality criteria are maintained. The worst geometric configuration is for a fresh fuel assembly to be inadvertently loaded into an empty cell in the checkerboard configuration with the remainder of the rack fully loaded with fuel from the highest permissible reactivity. If it is assumed that all fuel assemblies are new fuel and the pool water is unborated, $k_{eff} \leq 0.95$.

SAFETY EVALUATION NINE - As described in Section 9.1.2.5, a monitoring system is provided to initiate an audible alarm if high radiation occurs.

SAFETY EVALUATION TEN - Access to the FSF is provided for periodic inspection as shown in Figures 1.2-20 through 1.2-22.

9.1.2.4 Tests and Inspections

The fuel storage racks were shop tested by insertion of a dummy assembly which is 0.17 inch minimum wider than an actual fuel assembly to ensure there is no significant resistance.

9.1.2.5 Instrumentation Application

As described in Section 12.3.4, two area radiation monitors are provided near the FSF which will provide a distinct audible and visual alarm to alert personnel in the vicinity. The monitors provide a hi-hi radiation alarm at 15 mrem/hr which will give prompt warning if high radiation occurs. These monitors are provided in accordance with GDC-63.

Criticality is precluded from occurring, however, by design and proper operation of the fuel handling system, as described in Section 9.1.4.

9.1.3 FUEL POOL COOLING AND CLEANUP SYSTEM

The fuel pool cooling and cleanup system (FPCCS) is designed to maintain the fuel storage pool water temperature below prescribed limits by removing decay heat generated by stored spent fuel assemblies and to remove impurities from the refueling pool water, the spent fuel pool water, the transfer canal water, and the water in the cask loading pool in order to ensure optical clarity and to limit the concentration of specific activity in the water. This section describes the FPCCS.

The FPCCS consists of three subsystems:

a. Fuel pool cooling system

b. Fuel pool cleanup system

c. Fuel pool surface skimmer system

Each of these subsystems has specific functions and design bases.

9.1.3.1 Design Bases

9.1.3.1.1 Safety Design Bases

The portion of the FPCCS associated with the cooling of spent fuel is safety-related.

SAFETY DESIGN BASIS ONE - The safety-related portion of the FPCCS is protected from the effects of natural phenomena, such as earthquakes, tornadoes, hurricanes, floods, and external missiles (GDC-2).

SAFETY DESIGN BASIS TWO - The FPCCS is designed to remain functional after an SSE and to perform its intended function following the postulated hazards of fire, internal missiles, or pipe break (GDC-3 and 4).

SAFETY DESIGN BASIS THREE - Safety functions can be performed, assuming a single active component failure coincident with the loss of offsite power. Components of this system are not shared with other units (GDC-5 and 44).

SAFETY DESIGN BASIS FOUR - The active components are capable of being tested during plant operation. Provisions are made to allow for inservice inspection of components at appropriate times specified in the ASME Boiler and Pressure Vessel Code, Section XI (GDC-45 and 46).

SAFETY DESIGN BASIS FIVE - The safety-related portions of the FPCCS use the design and fabrication codes consistent with the quality group classification assigned by Regulatory Guide 1.26 and the seismic category assigned by Regulatory Guide 1.29. The power supply and control functions are in accordance with Regulatory Guide 1.32.

SAFETY DESIGN BASIS SIX - The capability to isolate components or piping is provided so that the FPCCS's safety function is not compromised. This includes isolation of components to deal with leakage or malfunctions and to isolate nonsafety-related portions of the FPCCS (GDC-44).

SAFETY DESIGN BASIS SEVEN - The containment isolation valves in the system are selected, tested, and located in accordance with the requirements of GDC-54 and 56 and 10 CFR 50, Appendix J, Type C testing.

SAFETY DESIGN BASIS EIGHT - The fuel pool cooling system maintains the fuel storage pool water temperature below 170°F, considering the

maximum decay heat generation rate resulting from the maximum anticipated spent fuel inventory with the maximum anticipated fuel burnup (GDC-44 and 61 and Regulatory Guide 1.13).

SAFETY DESIGN BASIS NINE - System piping is arranged so that loss of piping integrity or operator error does not result in draining of the fuel storage pool below a minimum depth above the stored fuel to ensure sufficient cooling media for cooling the stored spent fuel (Regulatory Guide 1.13).

SAFETY DESIGN BASIS TEN - Redundant seismic Category I makeup water supplies from the essential service water system are provided to ensure adequate makeup capability.

SAFETY DESIGN BASIS ELEVEN - A monitoring system is provided for the FPCCS to detect conditions that could result in the loss of decay heat removal capabilities (GDC-63).

9.1.3.1.2 Power Generation Design Bases

POWER GENERATION DESIGN BASIS ONE - The fuel pool cooling system is comprised of two cooling trains, each of which limits the fuel storage pool water temperature to a maximum of 140°F during a partial core offload and 170°F during a full core offload. Assumptions and heat loads for both design conditions are given in Table 9.1-4.

POWER GENERATION DESIGN BASIS TWO - The fuel pool cleanup and surface skimmer systems maintain the optical clarity of the pool water so that fuel handling operations are not hampered by limited visibility.

POWER GENERATION DESIGN BASIS THREE - The fuel pool cleanup system limits the fission and corrosion product concentrations in the refueling pool water, the transfer canal water, and the fuel storage pool water to permit operator access to the fuel storage area and for fuel handling operations.

POWER GENERATION DESIGN BASIS FOUR - The fuel pool cleanup system contains two pumps and two filters to allow for continuous system operation at a reduced capacity during filter cartridge changing and pump maintenance.

POWER GENERATION DESIGN BASIS FIVE - The fuel pool cleanup system provides the means for filtering and demineralizing the contents in the refueling water storage tank (RWST).

9.1.3.2 System Description

9.1.3.2.1 General Description

The FPCCS shown in Figure 9.1-3 consists of two cooling trains, a cleanup loop, and a surface skimmer loop. The system design parameters are given in Table 9.1-4.

9.1.3.2.1.1 Fuel Pool Cooling System

The fuel pool cooling system consists of two 100-percent-capacity cooling trains for the removal of decay heat generated by irradiated fuel stored in the fuel storage pool. Each train consists of a horizontal centrifugal pump, a shell and U-tube heat exchanger, a strainer, manual valves, and the instrumentation required for system operation. The fuel pool cooling heat exchangers are serviced by the component cooling water system on the shell side with motor-operated isolation valves provided.

Spent fuel is placed in the fuel storage pool during a refueling sequence, and is stored there until it is shipped offsite or transferred to the ISFSI. During a refueling, approximately 2/5 of a core may be transferred to the fuel storage pool or the entire core may be transferred to the fuel storage pool during a core-offload. The decay heat generated is transferred from the fuel pool cooling system through the fuel pool cooling heat exchangers to the component cooling water system.

During normal system operation, one fuel pool cooling pump takes suction from the fuel storage pool and transfers the pool water through a fuel pool cooling heat exchanger back to the fuel storage pool. The fuel pool cooling pump suction is protected by a permanent strainer located at the terminal end of the suction piping within the fuel storage pool. The pump suction line penetrates the spent fuel pool wall, near the normal fuel storage pool water level. The return line terminates at nominal elevation 2038 feet, approximately 17 feet above the top of the storage racks in the fuel storage pool. In order to prevent the draining of the fuel storage pool by siphoning action, an antisiphon hole is located in each return line, near the surface of the pool water.

Normal makeup water to the fuel storage pool is supplied by the reactor makeup water system. An alternate source of makeup water is the RWST via the fuel pool cleanup pumps. Boron addition to the fuel storage pool is normally accomplished by supplying borated water from the boric acid tanks via the boric acid blender. Boron may also be added by using the RWST as the source of makeup water to the fuel storage pool. All makeup and boron addition operations require manual action. Isolation of nonsafety-related portions of the FPCCS is a manual action.

Whenever irradiated fuel assemblies are in the fuel storage pool, at least 23 feet of water is maintained over the top of irradiated fuel assemblies seated in the storage racks. The water level in the fuel storage pool is determined to be above the minimum required depth once per 7 days. With water level less than 23 feet, suspend crane operations with loads in the fuel storage areas. Technical Specification 3.7.15 specifies the required actions taken during movement of irradiated fuel assemblies with water level less than 23 feet.

An FPCCS leak is detected when an abnormally high amount of makeup water is required for the fuel storage pool. Leakage is also detected by the floor drain system, as described in Section 9.3.3. Once a significant leak is found, the affected item is isolated and repaired.

9.1.3.2.1.2 Fuel Pool Cleanup System

The fuel pool cleanup system contains two inline centrifugal pumps and two filters in parallel, a mixed bed demineralizer, and a wye-type strainer. The pumps and filters are designed for 50 percent of the system capacity, and the demineralizer and strainer are designed for 100-percent system capacity. The demineralizer removes ionic corrosion impurities and fission products. The filters are provided to remove particulate matter which would have otherwise entered the demineralizer, and the wye strainer downstream of the demineralizer removes resin fines which may be released from the resin bed.

The fuel pool cleanup system provides the capability for purification of the water in the fuel storage pool, the transfer canal, the refueling pool, and the RWST. The water chemistry specifications are given in Table 9.2-16.

The fuel pool cleanup pump design is based upon both fuel pool cleanup pumps running. One fuel storage pool volume is processed per day. The design flow rate allows one volume change of the RWST contents in less than 25 hours, or the contents of the refueling pool in less than 22 hours.

9.1.3.2.1.3 Fuel Pool Surface Skimmer System

Surface debris is removed from the fuel storge pool, the fuel transfer canal, and refueling pool by a surface skimmer system. This system is comprised of surface intakes containing float-type strainers positioned just below the water surface. Lines from both pools and the fuel transfer canal are tied into a common header containing a pump and filter which discharges back into the fuel storage pool or refueling pool.

9.1.3.2.2 Component Description

FPCCS component design parameters are given in Table 9.1-5. Codes and standards applicable to the FPCCS are listed in Tables 3.2-1

and 9.1-5. The FPCCS is designed and constructed in accordance with the following quality group requirements: containment penetrations are quality group B, the separate and redundant cooling loops are quality group C, and the cleanup and skimmer loops are quality group D. The quality group B and C portions are designed to seismic Category I criteria.

Fuel Pool Cooling Pumps - The pumps are 100-percent-capacity, horizontal/centrifugal units. All wetted surfaces are austenitic stainless steel. Each pump takes suction from the fuel storage pool via separate suction lines. Each pump is sized to include an additional 5-percent margin on flow at the design head to accommodate normal degradation of performance due to impeller wear.

Fuel Pool Skimmer Pump - The inline centrifugal pump takes suction from movable surface skimmers, circulates the water through a pool surface strainer and a high efficiency filter, and returns it to the spent fuel pool. All wetted surfaces of the pump are austenitic stainless steel.

Fuel Pool Cleanup Pumps - These inline centrifugal pumps are used to circulate fuel storage pool and refueling pool water through the fuel pool cleanup filters, demineralizer, and wye strainer for removal of particulate and ionic impurities. Each pump is designed to provide 50 percent of the design flow in the loop. All wetted parts of the pumps are austenitic stainless steel. The contents of the RWST may also be circulated through the cleanup loop, using these pumps.

Fuel Pool Cooling Heat Exchangers - The heat exchangers are the shell and U-tube type. Fuel pool water circulates through the tubes while component cooling water circulates through the shell. Each of the two heat exchangers is sized for 100 percent of the design heat load.

Fuel Pool Cleanup Demineralizer - A flushable, mixed bed demineralizer is used to provide adequate fuel pool water purity for Zone B access of plant personnel to the pool working areas. This demineralizer is also used to purify the contents of the RWST.

Fuel Pool Cleanup Filters - Two filters in parallel, each sized at 50 percent of design flow in the cleanup loop, are located in the purification train, upstream of the demineralizer, to prevent possible particulates from being passed to the demineralizer.

Fuel Pool Skimmer Filter - The fuel pool skimmer filter is used to remove particles which are swept from the fuel pool water surface and not removed by the basket strainer in the floating skimmer.

Fuel Pool Strainers - A strainer is located in each fuel pool cooling pump suction line to prevent the introduction of relatively large particles which might otherwise foul the fuel pool cooling heat exchangers or damage the fuel pool cooling pumps.

Fuel Pool Skimmer Strainer - A strainer is located in the floating skimmer inlet to remove relatively large debris from the skimmer process flow.

Fuel Pool Cleanup Strainer - A wye-type strainer is provided downstream of the fuel pool cleanup demineralizer to prevent the entry of resin fines into the fuel pool and to trap any resin beads released in the event of retention element failure.

Refueling Pool Drain Inlet Strainer - a strainer is located in the inlet of refueling pool drain line to the suction of the reactor coolant drain tank pumps to prevent the introduction of relatively large particles which might otherwise restrict the refueling pool drain flow and/or damage the reactor coolant drain tank pumps.

Valves - Manual stop valves are used to isolate equipment and manual throttle valves to provide flow control. Valves in contact with fuel pool water are austenitic stainless steel. Motor-operated isolation valves are provided in the CCW line from each fuel pool cooling heat exchanger.

Piping - All piping in contact with the fuel pool water is austenitic stainless steel. The piping is welded, except where flanged connections are used to facilitate maintenance.

9.1.3.2.3 System Operation

9.1.3.2.3.1 Fuel Pool Cooling System

Normal operations of the fuel pool cooling system are manual and intermittent. The system is started, operated, and secured locally as required to maintain the water temperature below the established temperature limit for the fuel storage pool and to minimize the starting and stopping of a fuel pool cooling pump. During refueling, the refueling pool and the reactor core are cooled by the RHR system, as described in Section 5.4.7. The fuel pool cooling system is used only for removal of the decay heat generated by the irradiated fuel in the fuel storage pool.

The fuel storage pool water is borated to a concentration of no less than 2165 ppm.

Boron addition to the fuel storage pool is normally supplied from the boric acid tanks via the boric acid transfer pumps and the boric acid mixing tee, using a feed-and-bleed process. Boron may also be added to the pool water by supplying borated water from the RWST via the fuel pool cleanup pumps. These operations require manual action by the operator.

Makeup water to the fuel storage pool is normally provided by the reactor makeup water system via a manually operated valve. Makeup water may also be supplied from the RWST via the fuel pool cleanup pumps if the reactor makeup water system is unavailable. These makeup supplies compensate for normal evaporative losses from the fuel storage pool. The flow rate to the fuel storage pool is locally controlled by a manually operated valve.

When a complete irradiated core is unloaded from the reactor and stored in the fuel storage pool, the fuel pool cooling system has the capability to maintain the fuel storage pool water temperature below 170 F with only one cooling train operating in the normal mode (see Table 9.1-4).

Following a loss of normal power, without a loss-of-coolant accident (LOCA), the fuel pool cooling pumps can be switched manually to the standby power system to maintain cooling of the fuel storage pool.

Following a LOCA with loss of offsite power, the fuel pool cooling pumps trip, and cooling of the fuel storage pool is interrupted. The fuel storage pool water temperature is increased from the initial temperature, indicated in Table 9.1-4, Item 5c. Post-LOCA, at the start of the recirculation phase, component cooling water (CCW) flow to the fuel pool heat exchangers will be automatically isolated and CCW flow to the RHR heat exchangers will be automatically started. Flow is manually reestablished to the fuel pool heat exchangers after approximately 4 hours, when sufficient excess capacity exists in the CCWS. When the FPCCS is reestablished, the fuel pool cooling pumps are manually loaded to the Class 1E power source, and CCW flow is established to at least one of the fuel pool cooling heat exchangers.

The heat load contribution from the fuel storage pool for determination of the maximum total heat load to the UHS, as described in Section 9.2.5, is based on the decay heat rate shown in Table 9.1-4, item 5C. The fuel storage pool is assumed to contain fuel from the recent full core discharge (193 fuel assemblies) with the balance of the rack cells (2449 cells) occupied by fuel from old discharges. The heat loads, shown in Table 9.1-4, item 5c, occur 15 days after shutdown, which corresponds to the earliest time for reactor startup.

The bulk fuel storage pool and in-cell thermal hydraulic analysis (including the associated assumptions and input parameters) given in Appendix 9.1A supports the data provided in Table 9.1-4.

Redundant, safety-related sources of makeup water are supplied to the fuel storage pool by the ESW system, via manually operated valves. This source of makeup is to be used only when nonsafety-related makeup sources are not available.

During normal shutdown of the reactor, the RHR system is utilized to remove core decay heat, as described in Section 5.4.7. At approximately 4 hours after shutdown, the RHR heat exchanger represents sufficient available CCW duty to require reducing or terminating CCW flow to the FPCCS heat exchangers. Under this mode of operation, the fuel storage pool temperature is allowed to rise to a maximum of 170°F, at which point flow is reestablished to the FPCCS heat exchangers and sufficient excess CCWS capacity exists to handle the fuel storage pool duty.

The fuel storage pool lowest temperature, as evaluated in Appendix 9.1A reactivity analysis, is 39°F. Intermittent use of the fuel pool cooling system to maintain the pool temperature at or above 39°F is acceptable.

9.1.3.2.3.2 Fuel Pool Cleanup System

Normal fuel pool cleanup system operation is manual and intermittent. The system is started, operated, and secured locally, as required, to maintain optical clarity and to limit ionic corrosion and fission product concentration in the fuel storage pool and the refueling pool. During normal system operation, both fuel pool cleanup pumps can be run to obtain maximum system capability. Samples are periodically taken from the cleanup loop to determine the quality of the water.

During a refueling, after the refueling pool is filled with borated water from the RWST, the fuel pool cleanup pump(s) take suction from the refueling pool and transfer the water through the fuel pool cleanup filter(s) and the fuel pool cleanup demineralizer and back to the refueling pool. The cleanup of the refueling pool by the fuel pool cleanup system is augmented by the CVCS via the RHR system to expedite the cleanup process. These operations are continued during the entire refueling process to maintain water clarity for refueling and to minimize the radiation dose to operators. Following transfer of the irradiated fuel to

the fuel storage pool, the cleanup lines to the refueling pool are manually isolated and drained, and fuel storage pool cleanup is initiated as required.

After the refueling pool is drained to the RWST, the fuel pool cleanup system is isolated from the fuel storage pool, and the RWST is manually aligned for cleanup by the fuel pool cleanup filter(s) and demineralizer, via the fuel pool cleanup pump(s).

Upon high differential pressure or indication by manual sampling that the demineralizer resins are spent, the demineralizer resins are transferred to the solid radwaste system, as described in Section 11.4. Upon high differential pressure across the fuel pool cleanup or skimmer filters, that filter is isolated, and the cartridge is replaced by the filter handling system of the solid radwaste system, as described in Section 11.4.

However, if the system is unable to maintain sufficient clarity of the pool water and radiation levels adjacent to the pool when operated continuously, the filter and/or resin is replaced. No set radiation sampling frequency has been established for the pool water. In general, sampling is more frequent during and immediately after a refueling or if pool water radiation levels are higher than at other times.

Design parameters for the fuel pool cleanup system are as follows:

	Filter	Demineralizer
1. Decontamination factor		
Iodine	1	100
Cesium and rubidium	1	10
Other nuclides	1	100
2. Radiation level (See Section 12.2.1.3.2)	NA	NA

The fuel pool cleanup system is manually secured when the fuel pool water temperature exceeds 140°F to prevent damage to the fuel pool cleanup system resin beds.

9.1.3.2.3.3 Fuel Pool Surface Skimmer System

The fuel pool surface skimmer system is aligned and operated, as required, to clean the refueling pool water surface and/or the fuel storage pool water surface. All operations require manual operator action.

9.1.3.3 Safety Evaluation

The safety evaluations given below correspond to the safety design bases in Section 9.1.3.1.1.

SAFETY EVALUATION ONE - The safety-related portions of the FPCCS are located in the reactor, auxiliary, and fuel buildings. These buildings are designed to withstand the effects of earthquakes, tornadoes, hurricanes, floods, external missiles, and other appropriate natural phenomena. Sections 3.3, 3.4, 3.5, 3.7(B), and 3.8 provide the bases for the adequacy of the structural design of these buildings.

SAFETY EVALUATION TWO - The safety-related portions of the FPCCS are designed to remain functional after a safe shutdown earthquake. Sections 3.7(B).2 and 3.9(B) provide the design loading conditions that were considered. Sections 3.5 and 3.6 provide hazards analyses to assure that safe shutdown, as outlined in Section 7.4, can be achieved and maintained.

SAFETY EVALUATION THREE - Complete redundancy is provided and, as indicated by Table 9.1-6, no single failure will compromise the system's safety functions. All vital power can be supplied from either onsite or offsite power systems, as described in Chapter 8.0.

SAFETY EVALUATION FOUR - The FPCCS was initially tested with the program given in Chapter 14.0. Periodic inservice functional testing is done in accordance with Section 9.1.3.4.

Section 6.6 provides the ASME Boiler and Pressure Vessel Code Section XI requirements that are appropriate for the FPCCS.

SAFETY EVALUATION FIVE - Section 3.2 delineates the quality group classification and seismic category applicable to the safety-related portion of this system and supporting system. Section 9.1.3.2.2 shows that the components meet the design and fabrication codes given in Section 3.2. All the power supplies and the control functions necessary for safe function of the FPCCS are Class 1E, as described in Chapters 7.0 and 8.0.

SAFETY EVALUATION SIX - Section 9.1.3.2.1.1 describes provisions made to identify and isolate leakage or malfunction and to isolate the affected portion of the system.

SAFETY EVALUATION SEVEN - Sections 6.2.4 and 6.2.6 provide the safety evaluation for the system containment isolation arrangement and testability.

SAFETY EVALUATION EIGHT - The maximum decay heat generation rate that can be removed is governed by the capabilities of the fuel pool cooling system. The maximum decay heat loading was determined to be 63.41 MBtu/hr as discussed in appendix 9.1A.5.5 (see also Table 9.1-4). Under peak heat load, one fuel pool cooling train can maintain the fuel storage pool water temperature at or below 170°F. The fuel storage pool temperature may exceed 150°F for a maximum duration of 9 days following a full core offload (reference 9). Cycle-specific decay heat analysis and administrative controls ensure that the maximum pool thermal loading limit is not exceeded.

The maximum anticipated heat load to be removed by the fuel pool cooling system is based on the decay heat generated by a full core (193 assemblies) removed from the reactor and stored in the fuel storage pool 106 hours following a reactor shutdown, while the spent fuel assemblies from all of the previous (i.e., 2642-193=2449 assemblies) refuelings remain in the fuel storage pool.

The fuel pool cooling system is controlled manually. Assuming that one fuel pool cooling train fails, the fuel storage pool is large enough that an extended period of time is required for the water to heat up significantly, if cooling were interrupted. Therefore, there is sufficient time for the operator to manually switch to the backup cooling train. Table 9.1-4 contains the heatup rates for the design basis conditions. Table 9.1-3 indicates compliance with the Regulatory Guide 1.13 position.

SAFETY EVALUATION NINE - The fuel pool cooling piping and other piping penetrating the fuel storage pool enter and terminate near the normal pool water level to preclude the possibility of draining the pool. The cooling water return lines, which terminate at nominal elevation 2038 feet of the fuel storage pool, each contain a vent hole near the normal spent pool storage water level, so that the pool cannot be siphoned.

SAFETY EVALUATION TEN - The redundant seismic Category I essential service water system intertie with the fuel storage pool ensures adequate fuel storage pool makeup water, considering the maximum anticipated evaporation rates of the fuel storage pool water, as given in Table 9.1-4.

SAFETY EVALUATION ELEVEN - As described in Section 9.1.3.5, a monitoring capability is provided to verify fuel storage pool level and bulk temperature.

9.1.3.4 Tests and Inspections

Preoperational testing is discussed in Chapter 14.0.

Provisions are incorporated in the design to allow for periodic starting of the nonoperating pump for verification of the required cooling flowpath. These operations demonstrate the operability, performance, and structural and leaktight integrity of all FPCCS components.

The safety-related components of the system, i.e., pumps, valves, heat exchangers, and piping (to the extent practicable), are designed and located to permit preservice and inservice inspections.

9.1.3.5 Instrumentation Applications

The instrumentation provided for the fuel pool cooling and cleanup system is discussed below. Alarms and indications are provided as noted.

a. Temperature

Instrumentation is provided to measure the temperature of the water in the spent fuel pool and give main control room indication as well as annunciation when normal temperatures are exceeded. Instrumentation is also provided to indicate the temperature of the fuel pool water as it leaves each heat exchanger.

b. Pressure

Instrumentation is provided to measure and give local indication of the pressures in the suction and discharge lines of the fuel pool cooling pumps. Local pressure indication is provided on the discharge of the fuel pool cleanup pumps and fuel pool skimmer pump. Differential pressure instrumentation is also provided at the fuel pool cleanup demineralizer and filters and the fuel pool skimmer filter so that the pressure differential across these components can be determined.

c. Flow

Instrumentation is provided to measure and give local and main control room indication of the flow in the outlet line of the fuel pool cleanup pumps. A low-flow alarm is located in the main control room, in addition to a local low-flow alarm.

Instrumentation is also provided to measure and give local and main control room indication of the flow in the discharge lines of the fuel pool cooling pumps.

d. Level

A Class 1E level switch is provided to protect each fuel pool cooling pump from loss of suction on low water level in the fuel storage pool. Instrumentation is also provided to measure the water level of the fuel storage pool and give local and main control room indication and annunciation of high or low pool levels.

A non-Class 1E wire-guided wave radar level instrument is provided to reliably monitor the spent pool water level under adverse environmental conditions resulting from a beyond design basis external event (BDBEE) as described in Appendix 3D.

Redundant (designated Primary and Backup) level indications are located in the Auxiliary Building HVAC area, room 1512 for the Primary indication and room 1501 for Backup indication. The level indications provide a diverse, wide-range indication of spent fuel pool levels.

9.1.4 FUEL HANDLING SYSTEM

The fuel handling system (FHS) provides a safe means for handling fuel assemblies and control components from the time of receipt of new fuel assemblies to loading spent fuel into casks located in the cask loading pool for transfer to the ISFSI for onsite storage or for shipment of spent fuel for off-site transport. This includes equipment necessary for reactor vessel servicing. However, this does not include equipment specific to the ISFSI transfer cask or shipping casks, which is addressed in separate SARs for these systems/packages.

Design considerations include maintaining occupational radiation exposures ALARA during transportation and handling.

The fuel handling system is composed of cranes, equipment, special fuel handling devices, and a fuel transfer system that are designed to meet the seismic and safety classifications shown in Section 3.2.

9.1.4.1 Design Bases

9.1.4.1.1 Safety Design Bases

The portions of the FHS that are safety related are the containment isolation features of the fuel transfer tube and the crane structural components which prevent the falling of major crane components onto fuel assemblies or safe shutdown equipment.

SAFETY DESIGN BASIS ONE - The FHS is protected from the effects of natural phenomena, such as earthquakes, tornadoes, hurricanes, floods, and external missiles (GDC-2).

SAFETY DESIGN BASIS TWO - The FHS is designed to remain intact after an SSE or following the postulated hazards of fire, internal missiles, or pipe breaks (GDC-3 and 4).

SAFETY DESIGN BASIS THREE - The FHS components are capable of being tested during plant operation. Provisions are made to allow for inservice inspection and testing of components at appropriate times.

SAFETY DESIGN BASIS FOUR - The FHS is designed and fabricated to codes consistent with the seismic category assigned by Regulatory Guide 1.29 and industry standard specifications.

SAFETY DESIGN BASIS FIVE - The containment isolation provisions for the system are selected, tested, and located in accordance with the requirements of GDC-54 and 10 CFR 50, Appendix J, Type B testing.

SAFETY DESIGN BASIS SIX - The FHS is designed and arranged so that there are no loads which, if dropped, could result in damage, leading to the release of radioactivity in excess of 10 CFR 50.67 guidelines, or impair the capability to safely shut down the plant.

This meets the requirements of Regulatory Guide 1.13 and excludes the system from the requirements of Regulatory Guide 1.104.

9.1.4.2 System Description

9.1.4.2.1 General Description

The fuel handling system consists of the equipment needed to refuel the reactor core. Basically, this equipment is composed of cranes, handling equipment, and a fuel transfer system.

The associated fuel handling structures are divided into seven areas. In general, these areas are:

a. The refueling pool

b. The fuel transfer canal

c. The spent fuel pool

d. The shipping cask loading pool

e. The cask washdown pit

f. The new fuel storage vault

g. The new fuel receiving and inspection area

Figures 9.1-4 through 9.1-17 show equipment configurations and the areas of movement of the spent fuel and cask handling cranes.

Each new fuel assembly is removed from its shipping container utilizing a new fuel handling tool suspended from the monorail on the cask handling crane, inspected in the new fuel inspection area, and stored in the new fuel storage racks within the new fuel storage facility or moved to the new fuel elevator where it is lowered and transferred to a fuel storage pool storage location.

The new fuel is moved from its storage rack or inspection area, utilizing the new fuel handling tool suspended on the monorail hoist on the cask handling crane, and transferred to the new fuel elevator. The new fuel elevator is used to lower the new fuel assemblies into the cask loading pool. The new fuel is moved from the new fuel elevator, utilizing the spent fuel handling tool with the spent fuel bridge crane, and either placed in the fuel storage pool or transferred to the upended fuel containers located in the transfer canal, and then moved through the fuel transfer tube to the refueling pool where it is handled by the refueling machine.

The fuel transfer system includes a rod cluster control (RCC) storage rack and refueling machine. These facilitate the exchange of control rods between spent fuel and new fuel. The RCC storage rack may be used for temporary storage of new fuel during the refueling operations.

Spent fuel is removed from the reactor with the refueling machine, transferred to the fuel storage pool by the fuel transfer system and the spent fuel pool bridge crane, and deposited in a fuel storage pool rack.

In the fuel storage pool, fuel assemblies are moved by the spent fuel bridge crane. When lifting spent fuel assemblies, a long-handled tool is used to ensure that sufficient radiation shielding is maintained.

After a sufficient cooling time in the fuel storage pool (2-9 years), selected spent fuel assemblies may be removed from the storage racks and transferred to the ISFSI for onsite storage. Spent fuel assemblies are loaded in the ISFSI transfer cask located in the cask loading pool. Once the spent fuel assemblies are loaded in the dry shielded canister housed in the transfer cask, the transfer cask is moved to the washdown pit for top closure operations, testing and decontamination activities, then the transfer cask is downended onto the transfer trailer and moved to the ISFSI. The transfer cask with support skid is removed from the transfer trailer by the loading crane, the transfer cask is then aligned with and docked to the horizontal storage module, and the dry shielded canister is inserted into the horizontal storage module, all in accordance with the NUHOMS® EOS System UFSAR and Technical Specifications.

Similarly, after a sufficient decay period in the fuel storage pool (90-150 days), the spent fuel may be removed from the storage racks and transferred to the spent fuel shipping cask within the cask loading pool. The cask is sealed in the loading pool and then is decontaminated in the washdown pit to meet applicable transportation regulations and shipped off site.

In order to meet Department of Transportation regulations, dose rates below the maximum of 200 mrem/hr at the surface of the transporting vehicle and 10 mrem/hr at 6 feet from the surface must be attained prior to shipping.

Reactor servicing consists of those operations necessary to support refueling, maintenance, and inservice inspection.

9.1.4.2.2 Component Description

Principal codes and standards applicable to the FHS are listed in Tables 3.2-1 and 9.1-7 (Sheet 2).

REFUELING MACHINE - The refueling machine is a rectilinear bridge and trolley crane with a vertical mast extending down into the refueling pool. The bridge spans the refueling pool and runs on rails set into the pool edges. The bridge and trolley motions are used to position the vertical mast over a fuel assembly in the core. The bridge, trolley, main hoist, and hoist controls are interlocked through the use of the same control panel. A long tube with a pneumatic gripper on the end is lowered from the mast to grip the fuel assembly. The gripper tube is long enough so that the upper end is contained in the mast when the gripper end contacts the fuel assembly. A winch mounted on the trolley raises the gripper tube and fuel assembly up into the mast tube. The fuel is transported to its new position while inside the mast tube.

All controls for the refueling machine are mounted on a removable console on the trolley. The bridge and trolley are positioned in relation to a grid pattern referenced to the core. Bridge and trolley positions are indicated by a pointer-ruler system, and “absolute” encoders.

The outer mast is mounted on the trolley structure on a support bearing that allows rotation of the mast to allow a fuel assembly that is not properly oriented with the core position to be picked up and rotated into proper alignment. In the event a fuel assembly must be turned, the stops can be disconnected and the mast turned manually. With the mast rotated from normal operating position, the hoist is run at slow speed.

Fuel assemblies can be placed in the core in only one way relative to the core centerlines. Orientation of the fuel is maintained by the gripper which can engage the fuel only when the relative orientation is correct.

Indications are observed by the operator at the console. The drives for the bridge and trolley are variable speed. The maximum speed for the bridge is approximately 60 feet per minute. The trolley and hoist maximum speeds are both approximately 40 feet per minute. The auxiliary monorail hoist on the refueling machine has a variable speed controller to give hoisting speeds of 0 to 20 feet per minute.

Electrical interlocks, Programmable Logic Controller, and resolvers on the bridge and trolley drives prevent damage to the fuel assemblies. The winch is also provided with limit switches plus a mechanical stop to prevent a fuel assembly from being raised above a safe shielding depth should the limit switch fail. In an emergency, the bridge, trolley, and winch can be operated manually, using a handwheel, or equivalent, on the motor shaft. Suitable restraints are provided between the bridge and trolley structures and their respective rails to prevent derailing.

A conservative design approach is used for all load-bearing parts. The static design load for the crane structure and all lifting components is normal dead and live loads plus three times the fuel weight with a RCC assembly inserted. The design load on the wire rope hoisting cables does not exceed 0.20 times the average breaking strength. Where two cables are used, each is assumed to carry one-half the load.

A single finger on the fuel gripper can support the weight of a fuel assembly and RCC assembly without exceeding the requirements given in Table 9.1-7.

All components critical to the operation of the equipment or located so that parts can fall into the reactor are assembled with the fasteners positively restrained from loosening under vibration.

The refueling machine design includes the following provisions to ensure safe handling of fuel assemblies:

a. Safety interlocks

Operations which could endanger the operator or damage the fuel are prohibited by mechanical or fail-safe electrical interlocks, or by redundant electrical interlocks. All other interlocks are intended to provide equipment protection and may be implemented either mechanically or by electrical interlock, not necessarily fail-safe. The following interlocks are provided on the refueling machine:

1. When the gripper is engaged, the machine cannot move outside the core region unless the guide tube is in its full up position.

2. When the gripper is disengaged, the machine cannot traverse unless the gripper is withdrawn into the mast.

3. Vertical motion of the guide tube is permitted only in a controlled area over the reactor (avoiding the vessel guide studs), fuel transfer system, rod cluster control change fixture, gripper disengage plate or load testing fixture.

4. Traverse of the trolley and bridge is limited to the areas of item 3 and a clear path connecting those areas.

5. A key-operated interlock bypass switch is provided to defeat interlocks 1 through 4. That switch also operates a flashing red light to indicate that the interlocks are bypassed.

6. The gripper is monitored by limit switches to confirm operation to the fully engaged or fully disengaged position. An audible and a visual alarm are actuated if both engaged and disengaged switches are actuated at the same time or if neither is actuated. A time delay may be used to allow for recycle time of normal operation.

7. The loaded fuel gripper will not release unless it is in its down position in the core, or in the fuel transfer system or rod cluster control change fixture, and the weight of the fuel is off the mast.

8. Raising of the guide tube is not permitted if the gripper is disengaged and the load monitor indicates that it is still attached to the fuel assembly.

9. Raising of the guide tube is not allowed by two overload interlocks if the hoist loading exceeds specified values. The setpoint for the primary interlock is specified as the force in lbs. above the total weight of guide tube plus fuel assembly plus fuel insert. For wet conditions the setpoint for the primary overload interlock is less than or equal to 150 lbs. The setpoint for the master overload is less than or equal to 2614 lbs.

10. Lowering of the guide tube is not allowed by an underload interlock if the hoist loading falls below a specified value. The setpoint for the interlock is specified as the force in lbs. below the total weight of the guide tube plus fuel assembly plus lightest component. The setpoint for the underload is less than or equal to 150 lbs. At ≤2 inches above the full down position in the core, upender, and RCCA change fixture, the underload interlock will be bypassed.

11. The guide tube is prevented from rising to a height where there is less than 10 feet of nominal water coverage over the fuel.

12. The guide tube is prevented from lowering completely out of the mast.

13. The guide tube travels only at a controlled speed of about 2.5 fpm when: a) the bottom of the fuel begins to enter the core, and b) the gripper approaches the top of the core. In addition, just above those points, the guide tube automatically stops lowering, and requires acknowledgment from the operator before proceeding. If the guide tube is in open water (greater than two inches in both X and Y directions, or greater than the width of a fuel assembly plus two inches in one direction from any fuel assembly), the guide tube may operate at maximum speed.

14. The fuel transfer system lifting arm is prevented from moving unless the loaded gripper is in the full up position or the unloaded gripper is withdrawn into the mast, or unless the refueling machine is out of the upender zone. An interlock is provided from the refueling machine to the fuel transfer system to accomplish this.

b. Bridge and trolley holddown devices

The refueling machine bridge and trolley are both horizontally restrained on the rails by two pairs of guide rollers, one pair at each wheel location on one truck only. The rollers are attached to the bridge truck and contact the vertical faces on either side of the rail to prevent horizontal movement. Vertical restraint is accomplished by antirotation bars located at each of the four wheels for both the bridge and trolley. The antirotation bars are bolted to the trucks and extend under the rail flange. Horizontal and vertical restraints are both adequately designed to withstand the forces and overturning moments resulting from the SSE.

c. Main hoist braking system

The main hoists are equipped with two independent braking systems. A solenoid-release, spring-set electric brake is mounted on the motor shaft. This brake operates in the normal manner to release upon application of current to the motor and set when current is interrupted. The second brake is a mechanically actuated load brake internal to the hoist gear box that engages if the load starts to overload the hoist. It is necessary to apply torque from the motor to raise or lower the load. In raising, this motor cams the brake open; in lowering, the motor slips the brake, allowing the load to lower. This brake actuates upon loss of torque from the motor for any reason and is not dependent on any electrical circuits. Both brakes are rated at 125 percent of the hoist design load.

d. Fuel assembly support system

The main hoist system is supplied with redundant paths of load support so that failure of any component will not result in free-fall of the fuel assembly. Two wire ropes are anchored to the winch drum and carried to a load-equalizing mechanism on the top of the gripper tube. In addition, supports for the equalizing mechanism are backed up by passive restraints to pick up the load in the event of the failure of this primary support.

During each refueling outage and prior to removing fuel, the gripper and hoist system are load tested to 3250 pounds.

The in-Mast sipping system is a set of hardware that provides the means for performing on line, qualitative leak testing of irradiated fuel assemblies during normal core off load operations. The hardware includes adapters for the refueling machine mast to inject air at the bottom of the mast. A mean is provided to sample the fission gasses at the top of the mast and direct the sample to the portable analysis equipment. The air injection manifold is a two piece ring bolted to the bottom of the stationary mast to support the four air injection nozzles. The purpose of this manifold is to inject a stream of bubbles into the mast once the fuel assembly is in the up position. The stream of bubbles will strip off and fission gasses migrating out of the assembly and carry them to the top of the mast for collection.

The air collection manifold is a single piece ring mounted on the top of the stationary mast to provide a means to collect and sample the fission gasses from the fuel assembly. The final mast components are the roller covers to close off openings around the guide rollers in the stationary mast and air supply tubing mounted on the outside of the stationary mast to connect the air nozzle manifold to the air supply.

CASK HANDLING CRANE - The cask handling crane is a Crane Manufacturers Association of America (CMAA) No. 70, Class A, indoor electrical overhead traveling bridge crane with a single trolley and all the necessary motors, controls, and brakes, and a festooned pendant control station. The crane hoist is rated at 125 tons and is designed, fabricated and installed as single failure proof in accordance with NUREG 0554 and 0612. The crane and accessories are used to handle spent fuel shipping casks between the railroad cars or trucks, the loading pool, and the washdown pit. The crane is also used to handle the ISFSI transfer cask between the transfer trailer, the cask loading pool and the cask washdown pit. The lifting yoke for the transfer cask and the associated lifting trunnions on the transfer cask are designed, fabricated and tested as single failure proof per the requirements of NUREG-0612 and ANSI N14.6, such that a drop event when rigging the ISFSI transfer cask in the fuel building is precluded. A drop of the lifting yoke or top shield plug when rigging the top shield plug into the dry shielded canister when located in the cask loading pool is also precluded by design.

The main hoist and the main bridge trolley have an inching feature for positioning of the crane at desired locations.

The cask handling crane is equipped with a monorail and hoist which is used to transfer new fuel from the new fuel storage vault to the new fuel elevator. The monorail is also used for moving new fuel shipping containers. The monorail hoist is rated at 5 tons. The festooned pendant control station or radio control unit is utilized for controlling the cask handling crane and the monorail hoist.

The handling tool of the cask handling crane is designed to prevent a shipping cask from dropping into the spent fuel pool.

Under normal use, limit switches and mechanical stops are located to prevent any crane (other than the spent fuel pool bridge crane) from traveling over the spent fuel pool. During scheduled maintenance periods, the cask handling crane is used to provide access over the spent fuel pool, for example, for servicing of light bulbs and fire detectors. During these periods, the rail stops are removed to allow crane travel. These rail stops, which are not heavy loads, are hinged such that they can be rotated out of the path of the cask handling crane. The hinged connections are outside the crane rails and the stops rotate away from the center of the fuel building to allow crane travel. These stops do not require lifting to clear the cask handling crane, but are permanently attached to the crane rail support girder, thus precluding a drop. Administrative procedures are used to control removal and replacement of the interlock and stops and to position the hoist and hook so as not to travel above the pool during use of the cask handling crane above the pool.

Geared-type upper and lower limit switches are used in the control circuit of each hoist system of the fuel building cask handling crane. In addition to the geared-type limit switches, a weight-operated hoist upper limit switch is used in each hoist system of the cask handling crane. The two types of hoist upper limit switches are redundant and independent. If the geared-type limit switch were to fail, the weight-operated limit switch would cut off power to the

hoist, thus preventing vertical motion of the lifting block and the occurrence of a two-blocking event.

Specific data for the cask handling crane travel speeds and lifting capacities are shown on Table 9.1-7.

SPENT FUEL POOL BRIDGE CRANE - The spent fuel bridge crane is a CMAA No. 70, Class B type. The crane is designed to maintain its integrity during an SSE.

The crane consists of a 5-ton-capacity wheeled bridge structure with steel deck walkway, a 2-ton motorized monorail trolley, and a 5-ton manual push-type trolley. The crane has interlocking capabilities with the new fuel elevator, fuel storage pool transfer gate, and cask loading gate. The crane also has a 1/4-inch bridge and trolley positioning capability.

The spent fuel bridge crane is used to transport new and spent fuel to and from various locations inside the fuel building. These locations include the new fuel elevator, fuel storage racks, spent fuel transfer cask for the ISFSI, spent fuel shipping cask for offsite transport, upending device of the fuel transfer car, and fuel storage pool transfer gates. The handling tools for the new and spent fuel are different to prevent interchanging of the same. The hoist travel and tool length are designed to limit the maximum lift of a fuel assembly to a safe shielding depth.

The 2-ton electric hoist of the crane is primarily used to transfer spent fuel and new fuel assemblies. Control is from a pendant station supported from the trolley. The 5-ton manual chain hoist and trolley are used to move the fuel storage pool transfer gates to and from their normal storage positions. The hoists share the same monorail. While moving the transfer gates, the gates are secured by a redundant support to preclude the dropping of a gate on the fuel storage racks.

The spent fuel pool bridge crane has a limited maximum lift height so that the minimum required depth of the water shielding is maintained when the spent fuel is handled. This is accomplished by the use of limit switches.

Geared-type upper and lower limit switches are used in the control circuit of the electric hoist system of the spent fuel pool bridge crane. In addition to the geared-type limit switches, a weight-operated hoist upper limit switch is used in the electric hoist system of the spent fuel pool bridge crane. The two types of hoist upper limit switches are redundant and independent. If the geared-type limit switch were to fail, the weight-operated limit switch would cut off power to the hoist, thus preventing vertical motion of the lifting block and the occurrence of a two-blocking event.

Specific data pertaining to the travel speeds are shown on Table 9.1-7.

CONTAINMENT BUILDING POLAR CRANE - The polar crane is a CMAA No. 70, Class C type.

The containment has a 260/25-ton polar crane which is used, in conjunction with the various lifting rigs, to remove the Simplfied Head Assembly (SHA), the reactor vessel upper internals, and the lower internals. The 25-ton auxiliary hook on the polar crane, in conjunction with strategically located 3-ton-capacity jib cranes, is used for routine maintenance and inservice inspection. The crane is controlled from its bridge-mounted cab or a portable radio control unit. The polar crane is used during plant outages for maintenance activities, in plant modes 3 to 6. The heaviest load lifted is the SHA. The polar crane is designed to maintain its structural integrity under operating basis earthquake (OBE) and safe shutdown earthquake (SSE) conditions. An analysis has been performed to show that the polar crane will not derail under an OBE during plant operation. It is also designed to carry 260 Ton under an SSE, generally during outages.

The polar crane bridge is equipped with seismic restraints (snubbers), one in each corner of the crane girders G1 and G2 (corner #1 is snubber #1,corner #2 is snubber #2, etc), refer to Figures 9.1-24 to 9.1-26. Girder G1 is between corner #1 and corner #2 and Girder G2 is between corner #3 and corner #4. Each snubber consists of two wheels, each wheel contained in a frame. The two frames are pinned into a holding frame and thus are able to move with respect to each other. The wheels are pushed toward each other by a spring loaded hydraulic snubber. Thus, the wheels rest against the face of the girder flange on which the crane rests. In case of a seismic event (OBE or SSE), the wheels will stay in contact with the girder flange face, while the shock absorbers prevent the crane from moving more than 1/4 of an inch in the horizontal plane. The snubber wheels will be in contact with the face of the girder flange during plant modes 1 and 2. The snubbers in corners #1 to #4 may be retracted ¾” in all plant modes. Structural integrity during an SSE with the snubbers retracted to 3/4” has been analyzed in all plant modes. Vertical motion of the polar crane is restrained through the use of upkick lugs on the snubber frame, which project under the girder flange face, during seismic events.

Positive means are also provided to limit motion of the polar crane trolley during a seismic event. Trolley earthquake restraints are provided to limit vertical motion of the trolley. These restraints are attached to both sides of the trolley girders (G1 and G2) and project under the flanges supporting the rails on which the trolley runs. To help limit horizontal motion of the trolley during a seismic event, rail capture bars are provided.

The main hoist of the polar crane has a micro-drive, which enables the operator to move the main hoist hook at a speed of 3 inches per minute. The auxiliary hoist of the polar crane has an "inching" feature, which allows the operator to raise or lower the load at approximately 1/16 of an inch increments.

Geared-type upper and lower limit switches are used in each hoist system of the containment building polar crane. The geared-type limit switch is driven off the hoist drum shaft through an eccentric pin and crank arrangement. As the switch drive shaft rotates, it rotates two cam gears. Cam screws lock the cam wheels to their respective cam gears. Snap switches are actuated when the lobes on their associated cam wheels contact the switch

pushers. Snap switches open or close the contacts, thereby breaking or completing the electrical circuit to the hoist motor and holding brake.

In addition to the geared-type limit switches, a weight-operated hoist upper limit switch is used in each hoist system of the containment building polar crane. This assembly is used as a safety-type limit switch or final upper stop to prevent over-travel of the hook block as it approaches its upper limit. Thus, the block and load are prevented from coming into contact with any portion of the trolley, and an unsafe condition is avoided (two blocking event).

The two types of hoist upper limit switches, geared and weight-operated, are redundant and independent. This is to say that if the geared-type limit switch were to fail, the weight-operated limit switch would stop the load block from rising higher and would prevent the occurrence of a two-blocking event.

The polar crane main and auxiliary hooks are administratively controlled by procedure to prevent travel over the reactor vessel in all modes except cold shutdown and refueling. Once the upper internals have been removed and fuel is in the reactor vessel, crane hook travel will be prohibited over the open vessel except for the occasional need for reversing the orientation of the main/auxiliary hoists and for required vessel servicing activities such as irradiation sample removal. When there is fuel in the vessel, administrative procedures will not allow raising or lowering the hook while traveling over the open vessel to reverse the hoist orientation and the only item attached to either hook may be the load cell linkage attacked to the main hook. Note that during irradiation sample removal, the loads on the hoist hook, which are carried over the vessel are light (less than 600 pounds).

Specific data pertaining to the crane travel speeds and lifting capacity are shown on Table 9.1-7.

FUEL TRANSFER TUBE AND ASSOCIATED COMPONENTS - The fuel transfer system permits the safe underwater transfer of new and spent fuel assemblies between the fuel transfer canal in the fuel building and the refueling pool in the reactor building. Connecting these two areas is the fuel transfer tube which is a steel pipe 20 inches outside diameter and approximately 20 feet long. The pipe is inserted in a sleeve which is embedded in the concrete walls separating the two areas.

Angle rails forming a track and extending from the refueling canal through the transfer tube and into the transfer canal permit the controlled travel of the fuel car. During the fuel transfer operations, the fuel assemblies are supported by the fuel car. Attached to the car is the transfer car container which holds the fuel assembly. This container is a tube and is equipped with a centrally located pivot which allows the fuel assembly to be rotated from a vertical to a horizontal orientation for easier transfer. The fuel transfer car and container assembly travel through the transfer tube as one unit.

Positioned at the fuel bldg side of the transfer tube are mechanical stops. Water-activated hydraulic lifting arms which are the mechanisms that allow the fuel assembly to be pivoted are provided at both ends of the transfer tube. Each hydraulic drive is operated by a hydraulic pump.

The travel of the fuel assembly, transfer car, and container is achieved by the use of a pusher arm. This arm is connected to two stainless steel cables near the floor of the fuel transfer canal. These cables are driven by a motor-winch assembly and directed by a series of sheaves so that the cables will push the transfer car in one direction and pull in the other direction to move the container from the fuel building to the reactor building and vice versa. The motor-winch assembly is located near the operating floor of the fuel building.

The fuel transfer car is equipped with an emergency pullout cable to withdraw the car from the transfer tube should a system breakdown occur.

During reactor operation, the transfer car is stored in the fuel storage area. A blind flange is bolted on the reactor building cavity end of the transfer tube to seal the reactor containment. The terminus of the tube outside the containment is closed by a gate valve in the fuel building.

The following safety features are provided in the fuel transfer system during operation with NO bypass funcitons in effect:

a. Transfer car permissive switch

   The transfer car controls are located in the fuel storage area, and conditions in the containment are, therefore, not visible to the operator. The transfer car permissive switch allows a second operator in the containment to stop the car movement if conditions visible to him warrant such control.

   Transfer car operation is possible only when both lifting arms are in the down position, as indicated by the limit switches. The permissive switch is a backup for the transfer car lifting arm interlock. Assuming that the fuel container is in the upright position in the containment and the lifting arm interlock circuit fails in the permissive condition, the operator in the fuel storage area still cannot operate the car because of the permissive switch interlock. The interlock, therefore, can withstand a single failure.

b. Lifting arm (transfer car position)

Two redundant interlocks allow a lifting arm operation only when the transfer car is at the respective end of its travel and, therefore, can withstand a single failure.

Of the two redundant interlocks which allow a lifting arm operation only when the transfer car is at the end of its travel, one interlock is a position limit switch in the control circuit. The backup interlock is a mechanical latch device on the transfer car that is opened by the car moving into position.

c. Transfer car (valve open)

An interlock on the transfer tube valve permits transfer car operation only when the transfer tube valve position switch indicates that the valve is fully open.

d. Transfer car (lifting arm)

The transfer car lifting arm is primarily designed to protect the equipment from overload and possible damage if an attempt is made to move the car when the fuel container is in the vertical position. This interlock is redundant and can withstand a single failure. The basic interlock is a position limit switch in the control circuit. The backup interlock is a mechanical latch device that is opened by the weight of the fuel container when it is in the horizontal position.

e. Lifting arm (refueling machine)

The refueling canal lifting arm is interlocked with the refueling machine. The fuel transfer system lifting arm is prevented from moving unless the loaded gripper is in the full up position or the unloaded gripper is withdrawn into the mast, or unless the refueling machine is out of the upender zone.

f. Lifting arm (spent fuel pool bridge crane (SFPBC))

The lifting arm is interlocked with the SFPBC. The lifting arm cannot be operated unless the spent fuel pool bridge crane 2 Ton electric hoist is not over the lifting arm area.

ROD CLUSTER CONTROL CHANGING FIXTURE - The RCC changing fixture is used for periodic RCC element inspections and for the transfer of RCC elements from one fuel assembly to another. The major subassemblies which comprise the changing fixture are the frame and track structure, the carriage, the guide tube, the gripper, and the drive mechanism. The carriage is a movable container supported by the frame and track structure. The tracks provide a guide for the four flanged carriage wheels and allow horizontal movement of the carriage during the changing operation. The positioning stops on the carriage and frame locate each of the three carriage compartments directly below the guide tube. Two of these compartments are designed to hold individual fuel assemblies while the third is made to support a single RCC element.

The guide tube is situated above the carriage and is mounted on the refueling canal wall. The guide tube provides for the guidance and proper orientation of the gripper and RCC element as they are being raised and lowered. The gripper is a pneumatically actuated mechanism responsible for engaging the RCC element. It has two flexure fingers which can be inserted into the top of the RCC element when air pressure is applied to the gripper piston. Normally, the fingers are locked in the radially extended position. Mounted on the operating deck is the drive mechanism assembly which is composed of the manual carriage drive mechanism, the revolving stop operating handle, the pneumatic selector valve for actuating the gripper piston, and the electric hoist for elevation control of the gripper.

NEW FUEL ELEVATOR - The new fuel elevator consists of a box-shaped assembly with its top end open. The elevator is sized to house only one fuel assembly. It is located on the wall of the cask loading pool and is used primarily to lower a new fuel assembly to the pool bottom. It is also used to support other activities and may contain an irradiated fuel assembly, fuel rodlet container, or other equipment or components weighing less than the design value for the elevator. When it is at the bottom of the pool, the fuel assembly is transported to either the fuel storage pool storage racks or to the container of the fuel transfer car by the use of the spent fuel pool bridge crane.

SPENT FUEL ASSEMBLY HANDLING TOOL - The spent fuel assembly handling tool, also referred to as the long-handling tool, is used to manually handle the new and spent fuel in the fuel storage pool. An operator on the spent fuel pool bridge crane guides and operates the tool. The tool is designed to maintain its integrity during an SSE.

The tool employs four cam-actuated latching fingers which grip the underside of the fuel assembly top nozzle. When the fingers are

latched, a lock pin is inserted into the operating handle to prevent the fingers from being accidentally unlatched during fuel handling operations.

The tool weighs approximately 376 pounds and is preoperationally tested at 125 percent the weight of one fuel assembly with control assembly inserted (1,600 pounds).

NEW FUEL ASSEMBLY HANDLING TOOL - The new fuel assembly handling tool is a short-handled device located on the cask handling crane monorail. It is used to handle new fuel on the operating deck of the fuel building, to remove the new fuel from the shipping container, and to facilitate inspection and storage of the new fuel and loading of fuel into the new fuel storage racks and the new fuel elevator.

The new fuel assembly handling fixture employs four cam-actuated latching fingers which grip the underside of the fuel assembly top nozzle. When the fingers are latched, the safety mechanism on the side of the tool is turned in to prevent accidental unlatching of the fingers.

The tool weighs approximately 80 pounds and is preoperationally tested at 125 percent the weight of one fuel assembly with control rod inserted (1,600 pounds).

REACTOR CAVITY SEAL RING - A permanent, watertight reactor cavity seal ring is mounted between the reactor vessel flange and the cavity liner at the bottom of the refueling pool. The permanent cavity seal ring (PCSR) covers the annulus around the vessel permitting the cavity to be flooded for refueling. The PCSR is designed to remain in place during all plant operations as well as during refueling. Access covers are provided to allow a ventilation flow path during reactor operation. The PCSR is not an ASME Code class item and it is classified as a non-nuclear safety class item in accordance with ANSI N18.2 (1973).

9.1.4.2.3 System Operation

The fuel handling equipment is designed to handle the spent fuel assembly under water from the time it leaves the reactor vessel until it is placed in a cask for transfer to the ISFSI or a container for shipment from the site. Underwater transfer of spent fuel assemblies provides an effective, economic, and transparent radiation shield, as well as a reliable cooling medium for the removal of decay heat.

Fuel is moved between the reactor vessel and the refueling canal by the refueling machine. A RCC changing fixture is located in the refueling canal for transferring control elements from one fuel assembly to another. The fuel transfer system is used to move fuel assemblies between the containment building and the fuel storage building. After a fuel assembly is placed in the fuel container, the lifting arm pivots the fuel assembly to the horizontal position for passage through the fuel transfer tube.

The fuel transfer tube is fitted with a blind flange on the refueling pool end and a gate valve on the fuel transfer canal end.

After the transfer car transports the fuel assembly through the transfer tube, the lifting arm at that end of the tube pivots the assembly to a vertical position so that the assembly can be lifted out of the fuel container.

During nonrefueling operations, a blind flange seals the containment side of the transfer tube in order to ensure the leaktight integrity of the containment. Two 0-ring seals are located around the periphery of the blind

flange with leak-check provisions between them in order to perform a Type B test per 10 CFR 50, Appendix J.

In the fuel storage building, fuel assemblies are moved about by the fuel handling machine. When lifting fuel assemblies, the hoist uses a long-handled tool to assure that sufficient radiation shielding is maintained. A shorter tool is used to handle new fuel assemblies initially, but the new fuel elevator must be used to lower the assembly to a depth at which the fuel handling machine, using the long-handled tool, can place the new fuel assemblies into or out of the fuel storage racks.

In MODES 5, 6, and defueled, during spent fuel pool bridge crane operations, one offsite AC circuit and one EDG are required to be operable. When either the required offsite AC circuit or the required EDG is determined to be inoperable, operation of the spent fuel pool bridge crane is suspended. The suspension of movement of the spent fuel pool bridge crane shall not preclude completion of movement of the component to a safe position.

Decay heat, generated by the spent fuel assemblies in the fuel storage area, is removed by the fuel pool cooling and cleanup system. After a sufficient decay period, the spent fuel assemblies may be removed from the fuel racks and loaded into a transfer cask for onsite storage at the ISFSI or shipping containers for removal from the site.

9.1.4.2.3.1 Fuel Handling System Operations

NEW FUEL RECEIVING AND STORAGE - New fuel assemblies are delivered to the site by truck or rail in approved containers. New fuel containers are removed from the truck or railcar in the fuel shipping and unloading area of the fuel building. Each container is moved from a horizontal to a vertical position, opened, and fuel assembly is removed from the container with the use of the new fuel handling tool, suspended on the monorail hoist on the cask handling crane. The assemblies are moved to the new fuel inspection area. A strongback is used initially to upend and prevent the bowing of the new fuel assembly. While the new fuel assembly is in this area, the cleanliness is verified, and the assembly is visually inspected for any damage.

Following inspection, the new fuel is transferred using of the new fuel handling tool suspended from the monorail hoist on the cask handling crane to the new fuel storage racks in the new fuel storage vault, or moved to the new fuel elevator where it is lowered and transferred to a fuel storage pool location.

REFUELING PROCEDURE - The refueling operation follows a detailed procedure which provides a safe, efficient, refueling operation. The following significant points are assured by the refueling procedures:

a. The refueling water and the reactor coolant are maintained at no less than the boron concentration specified in the COLR. This concentration, together with the negative reactivity of the control rods, is sufficient to keep the core approximately 5-percent Δ/k subcritical during the refueling operations. It is also sufficient to maintain the core subcritical in the unlikely event that all of the RCC assemblies were removed from the core.

b. The water level in the refueling pool is high enough to keep the radiation levels within acceptable limits when the fuel assemblies are being removed from the core.

The refueling operation is divided into five major phases:

Phase I - Preparation

Phase II - Reactor disassembly

Phase III - Fuel handling

Phase IV - Reactor reassembly

Phase V - Preoperational checks and startup

Phase I - Preparation

The reactor is shut down, borated, and cooled to cold shutdown conditions ($\leq$140 F) with a final k_{eff} $\leq$0.95 and all rods inserted. Following a radiation survey, the containment is cleared for entry. The reactor coolant system level is lowered to a point slightly below the reactor vessel flange. The fuel transfer equipment, refueling machine and polar crane are checked for proper operation.

Phase II - Reactor Disassembly

Prior to reactor vessel head disassembly, several items must be disconnected and removed. The tie rods which anchor the control rod drive mechanism (CRDM) seismic support platform to the refueling pool walls are disconnected. All cables connected to the reactor vessel head (rod position indication, CRDM power cables, upper instrumentation thermocouple leads, upper head loose parts monitoring leads, and head vent valves) are disconnected. The power cables to the CRDM fans are disconnected. RVLIS is disconnected. The reactor vessel head shield doors are closed for shielding.

The insulation is removed from the vessel head and studs detensioned and removed, guide studs installed and stud holes plugged. The refueling cavity is prepared for flooding by installing blind flanges on the refueling pool drain holes, checking underwater lights, tools and the fuel transfer system with the fuel transfer system blind flange removed. The shield plugs and cover plates on the permanent cavity seal ring are installed.

With the refueling cavity prepared for flooding, the reactor vessel head is lifted slightly and lift rig inspections completed. The reactor vessel head is gradually raised to clear CRDM drive shafts and core exit thermocouple bullet noses, cavity flood up is commenced and the reactor vessel head is moved to storage area. The remainder of the refueling cavity is flooded to the normal refueling level specified in Technical Specifications. The control rod drive shafts are disconnected from the RCC assemblies, and the upper internals are removed from the vessel and stored in the refueling cavity. The fuel assemblies and RCC assemblies are now free of obstructions and the core is ready for refueling.

Phase III - Fuel Handling

The reactor shall be determined to have been subcritical for at least 76 hours by verification of the date and time of subcriticality prior to movement of irradiated fuel in the reactor vessel. With the reactor subcritical for less than 76 hours, suspend all operations involving movement of irradiated fuel in the reactor vessel. This requirement is consistent with the assumptions of Section 15.7.4.5.1.2.

Prior to initiation of the refueling sequence, the refueling pool water level is raised to the same level as the fuel storage pool, and the gate valve, which normally isolates the fuel building side of the transfer tube is opened. In this condition, there is communication between the fuel building pools and the refueling pool; therefore, level monitoring, including a low level alarm, is provided by the fuel pool cooling and cleanup system.

The refueling sequence is started with the refueling machine. Spent fuel assemblies are removed from the core in the sequence prepared by plant personnel before each refueling.

During those activities that are defined as core alterations in the Technical Specifications, direct communications between the Control Room and refueling station are demonstrated. Communications is verified within 1 hour prior to the start of core alterations and at least once per 12 hours during core alterations. Without direct communications between the Control Room and the refueling station, core alterations are suspended.

The general fuel handling sequence is:

a. The refueling machine is positioned over a fuel assembly in the core.

b. The fuel assembly is lifted by the refueling machine to a predetermined height sufficient to clear the reactor vessel and still leave sufficient water covering to eliminate any radiation hazard to the operating personnel.

c. The fuel transfer car is moved into the refueling pool from the fuel transfer canal.

d. The spent fuel assembly is moved by the refueling machine to the fuel transfer car.

e. The fuel assembly container on the transfer system is pivoted to the vertical position by the upender.

f. The refueling machine is moved to line up the spent fuel assembly with the fuel assembly container, and the spent fuel assembly is loaded into the assembly container on the transfer system.

g. The container is pivoted to the horizontal position by the upender.

h. The fuel and container are moved through the fuel transfer tube to the fuel transfer canal by the transfer car.

i. The fuel assembly and container are pivoted to the vertical position. The spent fuel assembly is unloaded by the spent fuel handling tool attached to the spent fuel pool bridge crane.

j. The spent fuel assembly is transferred through the spent fuel storage pool transfer gate, and placed in a designated location in the spent fuel storage racks.

k. This sequence continues until the core is off-loaded. The core may be either partially or fully off-loaded.

l. Fuel is reloaded into the reactor vessel by reversing the steps necessary for fuel removal.

The reactor is now ready for the reassembly phase.

Phase IV - Reactor Reassembly

The reactor reassembly, following refueling, is essentially achieved by reversing the operations given in Phase II - Reactor Disassembly.

During those activities that are defined as core alterations in Technical Specifications, direct communications between the Control Room and refueling station are demonstrated. Communications is verified within 1 hour prior to the start of core alterations and at least once per 12 hours during core alterations. Without direct communications between the Control Room and the refueling station, core alterations are suspended.

Phase V - Preoperational Checks and Startup

After the refueling pool has been drained, the reactor assembled, and the fuel transfer tube has been isolated, cleanup of the fuel handling areas within the containment building is performed in accordance with the established station housekeeping procedures.

The blind flanges covering the refueling pool drain holes are removed and stored in designated locations, and the refueling pool strainers are replaced. Any maintenance which is required on fuel handling equipment inside the containment is done during this general cleanup phase of refueling.

SPENT FUEL STORAGE AT THE ISFSI – Spent fuel is stored onsite in the NUHOMS® EOS System under the general license provisions of 10 CFR 72 Subpart K. Refer to Chapter 9 of the NUHOMS® EOS System UFSAR, Docket 72-1042 for details of the loading, transfer and storage operations for the ISFSI. Following is a summary of the interface of ISFSI equipment with the fuel handling systems in the fuel building.

The spent fuel assemblies are stored in the fuel storage pool, until sufficient cooling time permits transfer to and storage at the ISFSI. The ISFSI transfer cask is brought into the shipping/receiving area. The 125 ton cask handling crane, utilizing the lifting yoke upends the transfer cask and places it on the floor of the fuel building. The transfer cask lid is disengaged from the top of the cask and stored in its designated storage area (either before or after upending the transfer cask). The dry shielded canister is then brought into the fuel building and placed in the transfer cask which is subsequently moved to the cask washdown pit where the components are further prepared for fuel loading.

The transfer cask is then lowered into the cask loading pool where the cask loading pool is flooded (i.e., gate for transfer slot removed). The spent fuel handling tool on the spent fuel bridge crane transfers the selected spent fuel assemblies from the fuel storage racks through the transfer slot to the cask loading pool and places them in the dry shielded canister housed within the transfer cask.

After the spent fuel is loaded, the top shield plug is placed into the dry shielded canister and then the transfer cask is moved to the cask washdown pit for top closure activities, testing and decontamination. The transfer cask lid

is installed and bolted down. The transfer cask is then removed from the cask washdown pit and downended onto the transfer trailer for transfer to the ISFSI pad where the dry shielded canister is inserted into the designated horizontal storage module for storage.

SPENT FUEL SHIPMENT - The spent fuel assemblies are stored on site, in the fuel storage pool, until fission product inventory and the decay heat is low enough to permit shipment. A spent fuel shipping cask (either by rail or truck) is brought into the shipping/receiving area. The 125-ton cask handling crane upends the cask and places it in the cask washdown pit where it is thoroughly cleaned. The cask head is then disengaged from the top of the cask and stored in its designated storage area.

The cask is then lowered into the cask loading pool. The cask loading pool is normally flooded and considered part of the fuel storage pool. The removable gate is used to isolate the spent fuel pool from the cask loading pool, if a leak should occur in the cask loading pool.

The spent fuel handling tool on the spent fuel bridge crane transfers the spent fuel from the fuel storage racks to the cask loading pool and places it into the shipping cask.

After the cask is loaded, it is capped in the pool and then carried to the cask washdown pit for decontamination. The cask is then placed on the railcar or truck bed. The cask is monitored for radioactivity and verification made to ensure that the provisions of state and federal regulations are met.

Spent Fuel Casks (used to remove fuel from the plant) shall not be immersed in, or carried over, the Cask Loading Pool while spent fuel is stored in storage racks within this pool, unless one of the following is performed prior to the load lift:

1. An evaluation is performed to demonstrate the acceptability of damage to the stored fuel, rack modules, pool liner, and structure.

2. Effective means (such as crane stops, limits, barriers or impact limiters, etc.) are implemented to preclude damage to the stored fuel, rack modules, and structure.

9.1.4.3 Safety Evaluation

Safety evaluations are numbered to correspond to the safety design bases in Section 9.1.4.1.1.

SAFETY EVALUATION ONE - The safety-related portions of the FHS are located in the reactor and fuel buildings. These buildings are designed to withstand the effects of earthquakes, tornadoes, hurricanes, floods, external missiles, and other appropriate natural phenomena. Sections 3.3, 3.4, 3.5, 3.7(B), and 3.8 provide the bases for the adequacy of the structural design of these buildings.

SAFETY EVALUATION TWO - The safety-related portions of the FHS are designed to remain intact after an SSE. Section 3.7(B) provides the design loading conditions that were considered. Sections 3.5, 3.6, and 9.5.1 provide the required hazards analysis.

SAFETY EVALUATION THREE - The FHS is initially tested with the program given in Chapter 14.0. Periodic inservice functional testing is done in accordance with Section 9.1.4.4. The fuel transfer tube is inspected in accordance with the technical requirements of ASME Section XI.

SAFETY EVALUATION FOUR - Section 3.2 delineates the seismic category applicable to the safety-related portions of this system. Table 9.1-7 shows that the components meet the design and fabrication codes given in Section 3.2.

SAFETY EVALUATION FIVE - Sections 6.2.4 and 6.2.6 provide the safety evaluation for the system containment isolation arrangement and testability.

SAFETY EVALUATION SIX - In the event of a fuel handling accident in the fuel building, the radiological consequences analyzed in Chapter 15.0 demonstrate that the 10 CFR Part 50.67 guideline values are not exceeded. The circumstances resulting in a handling accident are limited to the following conditions.

a. Fuel drop from a lifting device

b. Improper operation of the transfer equipment and cranes

c. Drop of the RV head

The fuel handling equipment is designed to prevent a fuel assembly drop by providing special gripping devices which are locked in a manner which will not allow the release of the fuel assembly during transfer. The special features are described in Section 9.1.4.2.2.

Improper operation of the fuel transfer system is prevented by the location of special limit switches and interlocks which will not allow the movement of fuel assemblies unless they are properly oriented, horizontal, thus avoiding a fuel handling accident. Further description of these devices is given in Section 9.1.4.2.2.

Limit switches and interlocks located on the fuel handling cranes, in conjunction with administrative limits, prevent any improper operations which may result in a fuel handling accident. The limiting devices on the refueling machine and spent fuel pool bridge crane do not allow fuel to be moved unless it is in the proper orientation and handled correctly in the gripping tool of the crane.

Concerning the handling of loads over fuel in the fuel storage pool, administrative controls are employed to prevent the handling of loads that have a greater potential energy than those which have been analyzed.

The cask handling crane is restricted from moving the spent fuel cask over the spent fuel pool, the new fuel vault, the fuel pool cooling system, or engineered safety features systems which could be damaged by dropping the cask. The cask handling crane trolley and main hoist are designed, fabricated, and installed per CMAA No. 70 (2010), AISC 14 Edition, AWS D1.1 2010, and meets the requirements of NUREG-0554 and NUREG-0612 for single failure proof. Therefore, spent fuel cask drop events need not be postulated, provided that the lifting and rigging devices that interface between the cask handling crane main hook and spent fuel cask (including lifting attachment points provided on the cask) are single failure proof per ANSI N14.6.

In a SHA (Simplified Head Assembly) removal or reassembly, it is postulated that the polar crane cable fails. If this unlikely event should occur, various consequences would prevail depending upon the position of the SHA in relation to the reactor vessel at the time of the polar crane cable failure. Eleven accident cases have been defined that envelope the effects of dropping the SHA at critical points along the path from the reactor vessel to the head storage stand.

The accident cases that have been defined are as follows:

1. (W) The Old Head Assembly falls approximately 14' through the air with the total load (318,673 lbs), with polar crane rope failure, while engaged on guide studs and impacts the reactor vessel flange (RV). This case has been explicitly analyzed by Westinghouse in WCAP-9198, revisions 0 and 1.

2. (W) The Old Head Assembly falls 4' through the air and 24.50' through water and impacts the RV flange with the total load (318,673 lbs) when the polar crane rope fails. The water medium provides additional damping compared with air. Westinghouse in WCAP-9198, revisions 0 and 1, determined that the impact velocity will be lower than case 1.

3. (W) The Old Head Assembly falls 4' through the air and 6.50' through water and strikes the guide studs, falls 18' through water and impacts the RV flange at an angle of 2.83°, with the total load (318,673 lbs) when the polar crane rope fails. This case is analyzed in Westinghouse WCAP 9198, revisions 0 and 1.

4. (W) The Old Head Assembly falls 4' through the air and 24.50' through water and lands partially on the RV flange and partially on concrete. This case considers the total load (318,673 lbs) when the polar crane rope fails. This case is analyzed in Westinghouse WCAP-9198, revisions 0 and 1.

5. (W) The Old Head Assembly falls 4' through the air and 24.50' through water and strikes the cavity floor. This case considers the total load (318,673 lbs) when the polar crane rope fails. This case in analyzed in Westinghouse WCAP-9198, revisions 0 and 1.

6. (W) The Old Head Assembly falls 24.50' through water, rotates into the refueling pool and strikes the concrete. This case considers the total load (318,673 lbs) when the polar crane rope fails. This case in analyzed in Westinghouse WCAP-9198, revision 0 and 1.

7. (A) The Simplified Head Assembly falls 28.50' through air and impacts the RV flange. This case considers the total load (357,000 lbs) when the polar rope crane fails. This case envelops Cases 1 through 6 analyzed in Westinghouse WCAP-9198, revisions 0 and 1.

8. (A) The Simplified Head Assembly falls 32' through air and impacts the RV flange. This case considers the total load (357,000 lbs) when the polar rope crane fails.

9. (A) The Simplified Head Assembly falls 35' through air and impacts the RV flange. This case considers the total load (357,000 lbs) when the polar rope crane fails. This is a one time evaluation only.

10. (WCNOC) The total load (366,000 lbs) when the polar crane rope fails with SHA, falls 28.5 feet through air and impacts the vessel flange assuming there is no water in the refueling pool. This is the most conservative case than having the SHA fall 4 feet through air and 24.5 feet through water. This case envelopes cases 1 through 6 analyzed by Westinghouse in WCAP-9198, Revision 0 and 1 (References 5.1 and 5.5) and Case 7 analyzed by ARES.

11. (WCNOC) The total load (366,000 lbs) when the polar crane rope fails with SHA, falls 32 feet through air and impacts the vessel flange assuming that there is no water in the refueling pool. This case will accommodate the setting of the "Limit Geared" switch during the refueling outages when the SHA is directly above the reactor vessel. This case bounds Cases 1 through 6 and 8.

Notes:

(W) = Westinghouse.

(A) = ARES Corporation.

(WCNOC) = Wolf Creek Nuclear Operating Corporation

The first six cases, Cases 1 to 6, were evaluated generically in Reference 1. It was found that Case 2 is the limiting accident case in terms of maximum impact velocity and medium participating mass at impact. In Part I of the WCGS head drop accident analysis, the reactor vessel nozzles are analyzed for a Case 2 situation using the methods and assumptions of Reference 1. However, the necessary changes from Reference 1 in weights, stiffnesses, and drop heights (assume there is no water in the refueling pool, the vessel head is positioned 28.50′ feet above the vessel flange and the polar crane cable is postulated to fail) were made in order to make this analysis more specific to WCGS while remaining conservative in terms of reactor vessel nozzle evaluation.

Cases 7 to 11 were analyzed in Reference 11. Cases 8 and 9 were performed to justify post plant events. Case 7 envelopes all Westinghouse cases where the SHA load drop occurs over the RV. Cases 9 and 10 were analyzed by Wolf Creek in the revised calculation in Reference 11. The load considered is 366,000 lbs. This load is the limiting load that can be carried. The studs, nuts and bolts, and the tie rods are not included in this weight. The absolute maximum lift height over the reactor vessel flange is 32'-0".

In order to more fully address the question of maintenance of core cooling capability, a reactor vessel support evaluation for the postulated head drop accident was also performed and is reported as Part II of the WCGS head drop accident analysis.

Part I - Reactor Vessel Nozzle Evaluation (28.50′ and 32′-0″)

Head assembly falls 28.50′ or 32 feet feet through air and impacts the vessel flange.

During SHA disassembly or reassembly, the vessel head is positioned 28.50 feet or 32 feet above the vessel flange. When the SHA is directly above the reactor vessel and at the maximum lift height, the polar crane cable is postulated to fail. The SHA falls, engages on the guide studs, and lands directly on the reactor vessel flange.

a. Head assembly impact velocity calculation

Assumptions

1. Final velocity is assumed to be equivalent to that of a 28.50′ and 32′-0″ drop through air. One time evaluation for 35′ drop. (Ref. 11)

2. The head does not bind with the guide studs.

Analysis

The head will impact on the reactor vessel flange after dropping. The head velocity just before the impact is given by the following equation

$$V = \sqrt{2gh}$$

where:

V = impact velocity

g = acceleration of gravity (32.2 ft/sec^2)

h = height = 28.50'; 32'

therefore $V=\sqrt{2\ (32.2\ ft/sec^2)\ (28.5\ ft)}$ = 42.84 ft/sec
or 514.08 in./sec

For h = 28.50 feet, collision occurs after 1.503 seconds.

At that time, the velocity is 514 inches/second.

For h=32', collision occurs after 419 seconds.

therefore $V=\sqrt{2(32.2'/\sec^2)(32) = 45.40\,ft/\sec\, or\, 545\,in/\sec}$

b. Consideration of fuel assemblies

The fuel assemblies, and specifically the fuel cladding, must retain their integrity in order to ensure no release of fission-product gases. During this accident, the head assembly itself does not come in contact with the fuel assemblies.

The drive rods, which extend above the reactor vessel flange, are carefully inserted into the head during normal refueling operations. However, during the accident, it cannot be assumed that all the drive rods enter the head penetrations. The drive rods will buckle under the weight of the falling head, and the buckling load of each buckling drive rod must be able to be withstood by the corresponding fuel assembly. The drive rod buckling load is the only major force experienced by the fuel assemblies and is calculated hereafter.

<u>Model of Critical Buckling Load for the Drive Rod</u>

Refer to Figure 9.1-18.

1. Buckling Load of Section l

Before the buckling load of Section 1 can be calculated, the end condition at its base must be defined. The end condition for Section 1 is determined by the reaction and buckling load of Section 2. Section 2 is considered to have 2 pinned ends because of the small radial clearance (0.325 inch).

2. Buckling Load for Section 2 (refer to Figure 9.1-19)

$$P_{cr} = \frac{\pi^2 EI}{(KL^2)}$$

P_{cr} = critical buckling load

E = modulus of elasticity

I = moment of inertia of an area

L = length

K = effective length factor ~ 0.82

D = average of major and minor drive rod thread diameters

d = inside diameter of drive rod

Calculate I

$$I = \frac{\pi(D^4 - d^4)}{64}$$

$$D = \frac{1.75 + 1.475}{2} = 1.613$$

$$I = \frac{\pi(1.613^4 - 0.875^4)}{64} = 0.3031 in.^4$$

E = 28.3 x 10^6 lb/in.^{2}

L = 12.50

$$P_{cr} = \frac{\pi^2(28.3x10^6)(0.3031)}{(12.50)^2}$$

P_{cr} = 541,810.05 lbs

The buckling load for Section 2 is 541,816 pounds. A P_{cr} load for Section 1 of anything less than 541,816 pounds will indicate that the two act independently of each other and Section 2 will not buckle, (refer to Figure 9.1-20).

$$P_{cr} = \frac{\pi^2 EI}{(KL^2)}$$

E = 28.3 x 10^6 lb/in.^{2}

I = 0.3031 in.^{4}

L = 138″

K = 0.82 (Effective Length Factor)

$$P = \frac{\pi^2(28.3x10^6)(0.3031)}{(0.82x138)^2}$$

P_{cr} = 6611 lbs

The maximum vertical force on the fuel assembly is the buckling load of Section 1. An impact force of this value will not impart enough damage to the fuel assembly, and fuel cladding integrity is maintained.

c. Consideration of reactor vessel nozzles

Description

The impact load of the head assembly on the vessel is transmitted through the vessel to the four supported vessel nozzles. The nozzles must be able to support this load without exceeding the allowable stress limits. The effects on the nozzles were evaluated by conservatively assuming the head drop through 28 feet of air.

Assumptions

1. The head assembly is assumed to drop 28.50 feet and 32 feet through air.

2. If it is assumed that the stresses due to the impact load are distributed throughout any elastic body exactly as in the case of static loading, then it can be shown that the vertical deformation, δ_i and the stresses σ_i produced in any such body by the vertical impact of a body falling from a height (h) are greater than the deformation δ and stress σ produced by the weight of the same body applied as a static load in the ratio (Reference 4):

$$\frac{\delta_i}{\delta} = \frac{\sigma_i}{\sigma} = 1 + \sqrt{1 + 2\frac{h}{\delta}}$$

If h=0, we have the case of sudden loading and

$$\frac{\delta_i}{\delta} = \frac{\sigma_i}{\sigma} = 2 \quad \text{as assumed.}$$

The above approximate formula is derived on the assumption that the impact load strains the elastic body in the same way (though not in the same degree) as static loading and that all the kinetic energy of the moving body is expended in producing this strain.

Actually in the impact some kinetic energy is dissipated and this loss, which can be found by equating the momentum of the entire system before and after impact, is more conveniently taken into account by multiplying the available energy by a factor K, the value of which is as follows (Reference 4):

Energy

Dissipation $$K = \frac{1 + \frac{1}{3}\frac{M_1}{M}}{\left(1 + \frac{1}{2}\frac{M_1}{M}\right)^2}$$

Factor

where:

M = mass of the moving body = $\frac{W}{g}$

M_1 = mass of the body struck by the moving body

$$= \frac{W_1}{g}$$

From the above equations, the impact load Wi can be derived as follows:

$$W_1 = W\left(1 + \sqrt{1 + \frac{2Kh}{\delta}}\right)$$

3. The rigidity of the vessel flange causes the impact loads to be distributed evenly to the four supporting nozzles.

4. The reactor vessel is supported by two inlet and two outlet nozzles.

5. Load deformation of the head at impact is neglected.

6. The area and moment of inertia for the inlet nozzle are larger than for the outlet nozzle at the nozzle to shell juncture region. Similar difference exists also for the cross section at the integral pad location. Hence, the outlet nozzle was evaluated for impact stresses.

Analysis

Determination of the Impact Load W_i

The head upper package and reactor vessel can be idealized as a simple spring mass system as shown in Figure 9.1-21.

Determination of Spring Constant k_v

The upper portion of the reactor vessel was idealized as spring k_v. To simplify the analysis, the upper portion of the vessel was conservatively assumed to be a cylindrical member with the cross section and parameters as follows (see Figure 9.1-22):

$$\delta = \frac{PL}{AE}$$

$$k_v = \frac{P}{\delta} = \frac{AE}{L}$$

where:

R = outside radius

r = inside radius

t = thickness

A = area

L = length = 91" (Ref. 1)

E = modulus of elasticity for carbon molysteel at 70° F

A = $\pi(R^2-r^2)$

= $\pi(96.19^2 - 85.44^2) = 6{,}134$ in.^{2}

$$k_v = \frac{(6{,}134)\times(29.9\times10^6)}{63} = 2.911 \times10^6 \text{ lb/in}$$

Spring constants for the inlet (k_{in}) and outlet (k_{on}) regions were determined from a 3-D finite element analysis of the reactor vessel.

Determination of equivalent spring constant k_e of the system shown in Figure 9.1-21:

k_{in} = 79.8 x 10^6 lbs/in.

k_{on} = 71.7 x 10^6 lbs/in.

k_s = 70.0 x 10^6 lbs/in. (Ref. 1)

k_v = 2.911 x 10^6 lbs/in.

k_{cool} = 407 x 10^6 lbs/in.

For the nozzles and supports in series:

$$k_{inlet\text{-}support} = \frac{1}{1/k_{in} + 1/k_s + 1/k_{cool}} = k_{ins}$$

$k_{inlet\text{-}support}$ = 3.416 x 10^7 lbs/in. = k_{ins}

$$k_{outlet\text{-}support} = \frac{1}{\frac{1}{k_{on}} + \frac{1}{k_s} + \frac{1}{k_{cool}}}$$

$k_{outlet\text{-}support}$ = 3.258 x 10^7 lbs/in. = k_{ons}

For springs in parallel:

$k_p = 2\ k_{ons} + 2\ k_{ins}$

k_p = 13.35 x 10^7 lbs/in.

For the springs in series:

$$k_e \frac{1}{\frac{1}{k_v} + \frac{1}{k_p}} = 12.76x10^7$$

The weight of the upper package, head assembly, and crane block (W) is 366,000 pounds (Table 9.1-10).

The weight of the vessel flange and nozzle shell (W_1) is 661,656 pounds.

$$K = \frac{1 + \frac{1}{3}\frac{W_1}{W}}{\left(1+\frac{1}{2}\frac{W_1}{W}\right)^2} = \frac{1 + \frac{1}{3}\ \frac{661,656}{366,000}}{\left[1 + \frac{1}{2}\left(\frac{661,656}{366,000}\right)\right]^2} = 0.442$$

Energy dissipation factor (K) is 0.442.

$$\delta = \frac{W}{k_e}$$

Static deflection (δ) is 0.0029 in.

<u>Impact Load</u> - For 28.50′ and 32′ drops

Impact Load (W_i) for 28.50 feet drop.

Equation $Wi = W\left(1 + \sqrt{1 + \frac{2Kh}{\delta}}\right)$ becomes:

$$Wi = 366,000\left[1 + \sqrt{1 + \frac{(2)(0.442)(28.50)(12)}{0.0029}}\right] = 119.2 \times 10^6$$

Impact load = 119.2 x 10^6 lbs

$$\text{Impact Displacement} = \frac{\text{Impact Load}}{\text{Stiffness (Ke)}} = \frac{119.2\text{x}10^6}{12.76\text{x}10^7} = 0.934 \text{ inches}$$

Assuming a perfect drop and four supported nozzles equally share the impact load:

$$\text{Impact force/nozzle} = \frac{119.2\text{x}10^6}{4} = 29.81\text{x}10^7 \text{lbs.}$$

Determine the stress developed in the outlet nozzle due to impact load (refer to Figure 9.1-23).

Impact Load (W_1) for 32 feet drop

Equation $W_1 = W\left(1 + \sqrt{1 + 2\frac{Kh}{\delta}}\right)$ becomes

$$W_1 = 366,000\left(1 + \sqrt{1 + \frac{2x0.442x32x12}{0.0029}}\right)$$

W_1 = 126 x 10^8 lbs

Impact load = 126 x 10^8 lbs

Impact Displacement = Impact Load / Stiffness
= (119.2 x 10^6 lbs)/(12.76 x 10^7 lbs/in)
= 0.99 in

Consistent with the assumption made in References 1 and 2, four supported nozzles equally share the impact load.

Impact force/nozzle = 1.26 x 10^8 lbs/4 = 31.58 x 10^6 lbs.

Nozzle Evaluation for 28.50' Drop:

R = 23.03 in.

r = 14.705 in.

Moment of Inertia (I) = $\frac{\pi}{4}\left(R^4 - r^4\right) = 1.842x10^5 in^4$

Maximum Bending Stress in the outlet nozzle

$$\sigma_B = \frac{MR}{I} = 53,660 \text{ psi}$$

where:

M=(Impact Force/Nozzle)*(a)=(29.81 x 10^6)*(14.40)=429.2 x 10^6 in-lb

Shear Stress

Maximum load at the nozzle cross section = impact force/nozzle = 29.81 x 10^6 lbs.

$$\tau_{avg} = \frac{\text{(Impact Force/Nozzle)}}{\pi\left(\mathrm{R}^2 - r^2\right)} = \frac{29.81x10^6}{\pi\left(23.03 - 14.705\right)} = 30,200 \text{ psi}$$

Maximum Principal Stress

$$\sigma_{\max} = \frac{1}{2}\sigma_B + \sqrt{\frac{1}{4}\sigma_B{}^2 + \tau_{avg}^2} = 67,230 \text{ psi}$$

Therefore, σ_{max} is less than the allowable limit of 84,000 psi (lesser of $3.6S_m$ or $1.05S_u$).

Nozzle Evaluation for 32 feet Drop Height

Bending Moment (M) = Impact force/nozzle * (a)
= (31.58x10^6 lbs)x(14.4 in.)=454,752 x 10^6 in-lb

Bending Stress (σ_B) = $\frac{MR}{I}$ = 56,850 psi

Shear Stress in Outlet Nozzle

Maximum load at the nozzle cross section = Impact force/nozzle = 31.58×10^6 lbs

$$\tau_{avg} = \frac{\text{Impact Force/Nozzle}}{\pi\left(R^2 - r^2\right)} = \frac{31.58 \times 10^6}{\pi\left(23.03^2 - 14.705^2\right)} = 30{,}200 \text{ psi}$$

Maximum Principal Stress in Outlet Nozzle

$$\sigma_{max} = \frac{1}{2}\sigma_B + \sqrt{\frac{1}{4}\sigma_B + \tau_{avg}^2} = 69{,}900 \text{ psi}$$

Therefore, σ_{max} is less than the allowable limit of 84,000 psi (lesser of 3.6 S_m or 1.05 S_u).

The results of the preceding analysis show that the reactor vessel nozzles are not stressed above allowable limits. In order to more completely address the question of maintenance of core cooling capability, an evaluation of the reactor vessel supports was performed, and the results are reported in Part II.

d. Consideration of core barrel

In a normal reassembly of the reactor vessel, the SHA first contacts the upper internals flange applying pressure against the core barrel holddown spring. The upper internals depress the holddown spring until the SHA contacts the vessel flange.
During this accident case the above reassembly description occurs compressing the hold-down spring. Any amplified effects could cause some yielding on the outer portion of the core barrel and upper internals flanges.

The bottom of the core barrel is designed with supports for a hypothetical accident in which the core barrel support, the flange, might fail and allow the core barrel to fall. These supports will limit its travel to approximately 1-1/4 inches in a cold condition without any failure to the fuel. Therefore, in an unlikely event of this accident case causing failure of the core barrel the lower internals supports would limit the core barrel travel as in the hypothetical accident to approximately 1-1/4 inches and still maintain the integrity of the core.

Part II - Reactor Vessel Support Evaluation

Due to the high impact loads on the reactor vessel nozzles reported in Part I, a reactor vessel support evaluation was performed for the effects caused by a postulated vessel head drop accident. In an effort to reduce the probability of vessel support damage due to high impact loads, the accident evaluation input parameters were revised to more closely reflect actual WCGS plant conditions during refueling. These changes are described as follows.

a. The mass assumed to resist the impact of the falling SHA is given in Part I as 290 kips. This is the weight of the vessel nozzles, vessel flange, and the upper portion of the vessel barrel. Since, in fact, the reactor vessel shell, internals, fuel, and water in the vessel are not isolated from one another in terms of the response to a vertical load on the vessel flange, the entire weight of the vessel shell, vessel internals, fuel, and water was assumed for Part II to resist the impact of the falling head assembly. This weight was found to be 1650 kips.

The WCGS reactor vessel supports were evaluated to determine the maximum vertical displacement of the reactor vessel due to the postulated head drop accident. This was done using energy balance techniques, taking into consideration energy losses at impact as determined by the change in velocity of the total system based on conservation of momentum principles.

The vessel supports are made up of a cooling box structure designed by Westinghouse that, in turn, is supported by a Bechtel design of structural steel framing partially embedded in the primary shield wall. The vertical stiffness of the Westinghouse-designed cooling box was found to be 4.07×10^5 kips/inch. This value is the resultant of several stiffnesses acting in series that were calculated separately along the height of the support. The separate calculations were necessary due to geometric changes in the cooling box which affected the bearing area of the vertical plates of which the box is composed.

The minimum moment of inertia along the height of the support was found to be 9,355 in.^{4}. This value was assumed constant throughout the unbraced length of 21.5 inches in order to find the minimum Euler buckling load of the cooling box. The buckling load ranges between 5.59×10^6 kips for pinned-pinned end conditions and 22.37×10^6 kips for fixed-fixed end conditions.

The minimum yield load of the cooling box was found by multiplying the cross-sectional area at the critical section (the same area used to determine the minimum moment of inertia) by the nominal yield strength of the steel. These values are 242.25 square inches and 50 ksi, respectively, and give a resulting yield load for each cooling box of 12.11×10^3 kips. A comparison of the yield load and minimum buckling load shows that the cooling box will yield before it buckles.

The yield displacement of the cooling box was found by dividing the yield load of 12.11×10^3 kips by the vertical stiffness, 4.07×10^5 kips/inch. The resulting displacement is 0.0298 inch. This defines the limit of elastic vertical deformation. Any further deformation was assumed to be perfectly plastic.

The Bechtel-designed portion of the reactor vessel supports has the following properties, as provided by Bechtel:

Stiffness:	34,880 kips/inch
Elastic Capacity:	7,560 kips per support
Ductility Ratio:	10

From the above data, the yield displacement was found to be 0.22 inch with an ultimate deformation of 2.2 inches. As in the cooling box portion of the support, any deformation beyond the yield displacement was assumed to be perfectly plastic.

The stiffness of the reactor vessel upper barrel used in the support evaluation was revised to 1.550×10^6 kips/inch. This was the result of changes in the following parameters affecting the stiffness calculation. These values were taken from the vessel drawing.

E = 28,000 ksi

R = 96.35 inches

r = 85.60 inches

A = 6,145 square inches

L = 111 inches

The parameter labels are defined in the reactor vessel nozzle evaluation of Part I.

The total system stiffness was found by adding the following stiffnesses in series:

a. Reactor vessel inlet and outlet nozzle stiffnesses (two each, from Part I)

b. Cooling box and embedded structural steel stiffnesses (four each)

c. Reactor vessel upper barrel stiffness

The resulting total system stiffness is 85,270 kips/inch.

A bilinear load-displacement curve describing the system response was next developed. A comparison of the minimum yield loads of the cooling box and embedded structural steel showed that the embedded structural steel will yield first at 7,560 kips per support or a total of 30,240 kips for all four supports. Dividing this yield load by the system stiffness gives a yield displacement of the total system of 0.36 inch. The following load-displacement curve can then be developed:

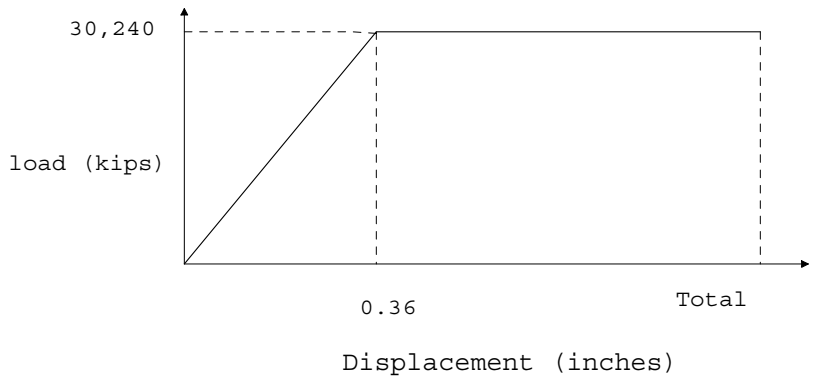

The area under the load-displacement curve is the internal resistance of the system to the impact load and system deformation caused by the postulated head drop accident. The area under the load-displacement curve, with X being the total displacement, is found as follows:

$$I = 30{,}240\ (X) - 0.5\ (30{,}240)\ 0.36$$

Where I = internal resistance

30,240 = minimum yield load of support system (kips)

0.36 = yield displacement of support system (inches)

The external work on the system is done by the falling head assembly and is the sum of the kinetic energy remaining after impact and the work required to deform the system vertically a distance X. The total kinetic energy at impact is modified to account for that which is lost by dissipation. The modification is by a factor determined by conservation of momentum and is given as follows:

For 28.5 feet Drop Height

The external work is given as follows:

$$E=366 \times (342) \times 0.442 + 366 \times (X)$$

Where,

342 inches = height of drop

Assuming the internal resistance equals the external work less the dissipated energy, the total system deformation was found by equating the expressions for I and E.

$$I = E$$

$$30{,}240\ (X) - 0.5 \times (30{,}240) \times 0.346 = 366 \times (342) \times 0.442 + 366 \times (X)$$

Solving for X,

$$X = 2.03 \text{ inch}$$

For 32 feet Drop Height

The external work is given as follows:

$$E = 366 \times (384) \times 0.442 + 366 \times (X)$$

Where,

384 inches = height of drop (inches)

Assuming the internal resistance equals the external work less the dissipated energy, the total system deformation was found by equating the expressions for I and E.

$$I = E$$

$$30{,}240\ (X) - 0.5 \times (30{,}240) \times 0.346 = 366 \times (384) \times 0.442 + 366 \times (X)$$

Solving for X,

$$X = 2.26 \text{ inch}$$

The distribution of the elastic deformation of the various components involved in supporting the reactor vessel is shown in Table 9.1-11. These values were determined by multiplying the total system elastic deformation of 0.36 inch by the ratio of the stiffness of the specific component to the total system stiffness. The plastic deformation of 1.684 (=2.03-0.346) inch for 28.5 feet drop and 1.914(=2.26-0.346) inch for 32 feet drop occurred entirely in the embedded structural steel portion of the vessel supports, since the minimum yield load assumed for the total system was that of the embedded steel. The total deformation of the embedded steel was found to be 1.684 (=1.682+0.217) inch for 28.5 feet drop height and 2.131 (=1.914+0.217) inch for 32 feet drop height. These deformations are less than the limit of 2.167 inches given previously.

After the maximum vessel displacement was determined, the routing of the essential auxilairy lines attached to each loop was examined to locate any possible interferences with civil structures, equipment, or pipe whip restraints. No interferences were found for the total vessel displacement indicated in Table 3-2. Table 3-3 shows the design margins based on maximum nozzle stresses for 28.5 and 32 feet drop heights.

The results of the support evaluation for the postulated head drop accident show that the reactor vessel supports and, hence, the reactor vessel and nozzles will displace vertically a maximum of 0.91 inch for 28.5 feet drop height and 1.00 inch for 32 feet drop height. Permanent deformation of the support system is 0.55 inch for 28.5 feet drop height and 0.64 inch for 32 feet drop height. The maximum displacement of the reactor vessel will not have an effect on the ability of the reactor coolant loop piping and essential auxilairy piping to circulate borated water to the core and remove residual heat. Therefore, core cooling capability and fuel cladding integrity are maintained.

The cranes and fuel transfer system are provided with limit switches to guard against improper travel and operations and to ensure correct and safe handling of the fuel assemblies. More specific details and descriptions of the limit switch applications are given in Section 9.1.4.2.2 for each major component where they may apply.

9.1.5 REFERENCES

1. Alexander, D. W., Shakely, R., and Dudek, D. F., "Reactor Vessel Head Drop Analysis," WCAP-9198, Westinghouse Letter SAP-07-45 dated June 27, 2007.

2. Hunsaker, J. C. and Rightnire, B. G., Engineering Applications of Fluid Mechanics, page 183.

3. Hoemer, J. F., Fluid-Dynamic Drag, page 317.

4. Roark, R. J., Formulas For Stress and Strain - Fourth Edition, pages 340, 370, and 371.

5. Holtec Documentation No. 981968, Rev. 2, "Criticality Analysis of the Wolf Creek New Fuel Vault with 5% Enriched Fuel (calculation)" DCN C-175A-00088-W03

6. Letter from J. C. Stone, USNRC, to O. L. Maynard, WCNOC dated June 24, 1997, Request For Exemption From 10 CFR 70.24 Criticality Monitoring Requirements - Wolf Creek Generating Station (TAC NO. M89161).

7. Holtec Documentation No. HI-971768, Rev. 5, "Thermal-Hydraulic Evaluation of the Reracked Callaway and Wolf Creek Spent Fuel Pool" DCN c-175A-00052-W06.

8. Calculation No. AN-99-032, Rev. 0, "The Heat Rejection Rate from the Spent Fuel Pool to the Ultimate Heat Sink following a LOCA"

9. Letter ET 98-0103, dated December 8, 1998, from R. A. Muench, WCNOC, to USNRC, Docket No. 50-482: Follow-up To December 3, 1998, NRC/Wolf Creek Nuclear Operating Corporation/AmerenUE Meeting on Spent Fuel Pool Rerack

10. Holtec Documentation No. HI-971754, Rev. 3, "Analysis of the Mechanical Accidents for Callaway and Wolf Creek Nuclear Plants" (C-175A-00053)

11. Calculation 0720517.01–C-001: "WCNOC Reactor Vessel Head Drop Analysis"

12. Westinghouse calculation CN-CSE-02-40: "Simplified Head Assembly (SHA) loads".

TABLE 9.1-1

NEW FUEL STORAGE DESIGN DATA

Component Requirements	Design Data
New fuel storage vault capacity	66 new fuel assemblies (approximately 34% of a core)
New fuel storage vault size	21 feet - 0 inches wide, 24 feet - 10 inches long, 15 feet - 0 inches deep (clear dimensions)
Module array	Center-to-center cell lattice array is 21 x 21 inches with 33 dual cell modules which are arranged in three rows of 11 modules each.

TABLE 9.1-2

SPENT FUEL STORAGE DESIGN DATA

Component Requirements	Design Data
Type	High density
Spent fuel pool storage capacity	With the Wolf Creek fuel storage pool rerack modification (SFP) in the year 2000, Wolf Creek total fuel storage space was increased from 1340 to 2363 fuel assemblies in the Spent Fuel Pool (SFP). The modification made in 2000 replaced the 12 original fuel storage racks with 15 high density storage racks. The license amendment in support of the rerack modification also included an additional capability to add 3 more high density storage racks, which would make a total of 18 high density storage racks. If the 3 additional high density storage racks are installed in the cask loading pool in the future, this would allow the capability to hold an additional 279 fuel assemblies, which would allow the total storage space of 2642 fuel assemblies in the SFP.
Fuel Storage pool size (does not include Cask loading pool)	28 feet - 6 inches wide 50 feet - 0 inches long 41 feet - 0 inches deep
Module array	Refer to Figure 9.1-2.
Fuel Storage pool design temperature, F	170

TABLE 9.1-3

DESIGN COMPARISON TO REGULATORY POSITIONS
OF REGULATORY GUIDE 1.13 REVISION 1,
DATED DECEMBER 1975, TITLED "SPENT FUEL
STORAGE FACILITY DESIGN BASIS"

Regulatory Guide 1.13 Position	WCGS
1. The spent fuel storage facility (including its structures and equipment, except as noted in Paragraph 6 below) should be designed to Category I seismic requirements.	1. Complies as described in Section 9.1.2.1.1.
2. The facility should be designed (a) to keep tornadic winds and missiles generated by these winds from the fuel storage pool and (b) to keep missiles generated by tornadic winds from contacting fuel within the pool.	2. Complies as described in Section 3.5, and 3.8.
3. Interlocks should be provided to prevent cranes from passing over stored fuel (or near stored fuel in a manner such that if a crane failed the load could tip over on stored fuel) when fuel handling is not in progress. During fuel handling operations, the interlocks may be bypassed and administrative control used to prevent the crane from carrying loads that are not necessary for fuel handling over the stored fuel or other prohibited areas. The facility should be designed to minimize the need for bypassing such interlocks.	3. Complies as described in Section 9.1.4.
4. A controlled leakage building should enclose the fuel pool. The building should be equipped with an appropriate ventilation and filtration system to limit the potential release of radioactive iodine and other radioactive materials. The building need not be designed to withstand extremely high winds, but leakage should be suitably controlled during refueling operations. The design of the ventilation and filtration system should be based on the assumption that the cladding of all of the fuel rods in one fuel bundle might be breached. The inventory of radioactive materials available for leakage from the building should be based on the assumptions given in Regulatory Guide 1.25, "Assumptions Used for Evaluating the Potential Radiological Consequences of a Fuel Handling Accident in the Fuel Handling and Storage Facility for Boiling and Pressurized Water Reactors" (Safety Guide 25).	4. Complies as described in Section 9.4.2 and 15.7.4. Note that Regulatory Guide 1.25 has been replaced by following Regulatory Guide 1.183.

TABLE 9.1-3 (Sheet 2)

Regulatory Guide 1.13 Position	WCGS
5. The spent fuel storage facility should have at least one of the following provisions with respect to the handling of heavy loads, including the refueling cask: a. Cranes capable of carrying heavy loads should be prevented, preferably by design rather than by interlocks, from moving into the vicinity of the pool; or b. Cranes should be designed to provide single-failure-proof handling of heavy loads, so that a single failure will not result in loss of capability of the crane-handling system to perform its safety function; or c. The fuel pool should be designed to withstand, without leakage that could uncover the fuel, the impact of the heaviest load to be carried by the crane from the maximum height to which it can be lifted. If this approach is used, design provisions should be made to prevent the crane, when carrying heavy loads, from moving in the vicinity of stored fuel.	5. Complies as described in Section 9.1.4.
6. Drains, permanently connected mechanical or hydraulic systems, and other features that by maloperation or failure could cause loss of coolant that would uncover fuel should not be installed or included in the design. Systems for maintaining water quality and quantity should be designed so that any maloperation or failure of such systems (including failures resulting from the safe shutdown earthquake) will not cause fuel to be uncovered. These systems need not otherwise meet Category I seismic requirements.	6. Complies as described in Section 9.1.2 and 9.1.3.
7. Reliable and frequently tested monitoring equipment should be provided to alarm both locally and in a continuously manned location if the water level in the fuel storage pool fails below a predetermined level or if high local-radiation levels are experienced. The high-radiation-level instrumentation should also actuate the filtration system.	7. Complies as described in Section 9.1.3.

TABLE 9.1-3 (Sheet 3)

Regulatory Guide 1.13 Position	WCGS
8. A seismic Category I makeup system should be provided to add coolant to the pool. Appropriate redundancy or a backup system for filling the pool from a reliable source, such as a lake, river, or onsite seismic Category I water-storage facility, should be provided. If a backup system is used, it need not be a permanently installed system. The capacity of the makeup systems should be such that water can be supplied at a rate determined by consideration of the leakage rate that would be expected as the result of damage to the fuel storage pool from the dropping of loads, from earthquakes, or from missiles originating in high winds.	8. Complies as described in Section 9.1.3.

TABLE 9.1-4

FUEL POOL COOLING AND CLEANUP SYSTEM
DESIGN PARAMETERS

1.	Fuel pool storage capacity, assemblies	Spent fuel pool	2363
		Ultimate	2642
2.	Spent fuel pool water volume(1), gal (water level 1'-6" from top of pool)	Nominal	400,000
3.	Boron concentration of the spent fuel pool water, ppm (minimum)		2,165
4.	Evaporation rates, gpm		
	@140°F	1.80	
	@170°F	5.57	

5a. Heat Loads and Bulk Pool Temperature for a Partial Core Offload (2), (5), (8), (9)

Heat Rate (MBtu/hr)	SFP Bulk Temperature (°F)
27.15	≤ 140

5b. Heat Loads and Bulk Pool Temperature for Full Core Offload (3), (6), (8), (9)

Heat Rate (MBtu/hr)	SFP Bulk Temperature (°F)
63.41	≤ 170

5c. Heat Loads and Bulk Pool Temperature 15 Days After Shutdown for Refueling (4), (7), (8), (9)

Heat Rate (MBtu/hr)	SFP Bulk Temperature (°F)
16.94	140

TABLE 9.1-4 (Sheet 2)

NOTES:

(1) For computation of thermal parameters, the spent fuel pool is considered isolated from the fuel transfer canal and the cask loading pool.

(2) The initial pool heatup rate [upon addition of spent fuel from refuel 26 (when the fuel storage pool is considered full)] is 8.0 °F/hr, assuming that FSP cooling is not operational.

(3) Pool heatup rate for core off load is 18.7 °F/hr, assuming that FSP cooling is not operational.

(4) Pool heat up rate 15 days after shutdown is 4.91°F/hr, assuming that FSP cooling is not operational.

(5) The maximum heat load is based on decay heat generation from the projected number of fuel assemblies that are discharged from a partial core offload, plus 26 previous refueling batches.

(6) The maximum anticipated heat load is based on the decay heat generated by a full core (193 assemblies) removed from the reactor and stored in the spent fuel pool, while the spent fuel assemblies from 26 previous refuelings remain in the spent fuel pool.

(7) The maximum heat load is based on decay heat generation from the fuel assemblies that are offloaded from the core and stored in the pool after reactor shutdown, plus 26 previous refueling batches. The cooling time is based on the assumption that the reactor could be brought back on line 15 days (360) hours following shutdown for refueling.

(8) Use of one cooling water train with 105°F CCW is assumed.

(9) See USAR Section 9.1A.3 for explanation of how the Maximum Heat Rate is determined.

TABLE 9.1-5

FUEL POOL COOLING AND CLEANUP SYSTEM
COMPONENT DESIGN PARAMETERS

Fuel Pool Cooling Pump	
Quantity	2
Type	Horizontal centrifugal
Design pressure, psig	150
Design temperature, °F	225
Design flow, gpm	3,250
Design head, ft	124
Material	Austenitic stainless steel
Design code	ASME Section III, Class 3
Motor data	150 hp/460 V/3 phase/60 Hz
Seismic category	I
Fuel Pool Skimmer Pump	
Quantity	1
Type	Inline centrifugal
Design pressure, psig	300
Design temperature, °F	160
Design flow, gpm	100
Design head, ft	156.7
Material	Austenitic stainless steel
Design code	MS

TABLE 9.1-5 (Sheet 2)

Fuel Pool Cleanup Pump	
Quantity	2
Type	Inline centrifugal
Design pressure, psig	300
Design temperature, °F	160
Design flow, gpm	150
Design head, ft	161.4
Material	Austenitic stainless steel
Design code	MS
Fuel Pool Cooling Heat Exchanger	
Quantity	2
Design heat transfer, Btu/hr	15.09×10^6*
Heat transfer area: gross, ft2	5270
Design codes	ASME Section III Class 3 and TEMA "R"
Seismic category	I

	Shell	Tube
Design pressure, psig	150	150
Design temperature, °F	200	250
Design flow, gpm	3,000	3,250
Inlet temperature, °F	105	125
Outlet temperature, °F	115.1	115.7
Fluid circulated	Component cooling water	Fuel pool cooling water
Material	Carbon steel	Austenitic stainless steel

*This nominal heat load was used to determine the heat exchanger surface requirement. The spent fuel pool heat exchanger has been verified to be capable of maintaining the pool temperature within acceptable limit for full core offload conditions.

TABLE 9.1-5 (Sheet 3)

Fuel Pool Cleanup Demineralizer	
Quantity	1
Design pressure, psig	150
Design temperature, °F	250
Design flow, gpm	300
Resin volume, ft^3	145
Design pressure drop (fouled), psi	12-15
Material	Austenitic stainless steel
Design code	ASME Section VIII, Div. 1
Fuel Pool Cleanup Filters	
Quantity	2
Design pressure, psig	150
Design temperature, °F	250
Design flow, gpm	150
Design pressure drop (clean/fouled), psi	2*/30
Filtration requirement	Absolute Filtration program target size is .1 micron at $\geq$ 99.98% efficiency
Material, vessel	Austenitic stainless steel
Design code	ASME Section VIII, Div. 1
Fuel Pool Skimmer Filter	
Quantity	1
Design pressure, psig	150

TABLE 9.1-5 (Sheet 4)

Design temperature, °F	250
Design flow, gpm	100
Design pressure drop (clean/fouled), psi	1*/30
Filtration requirement	Absolute Filtration program target size is .1 micron at ≥ 99.98% efficiency

* The clean filter differential pressure indicated here reflects the original filter housing design pressure drop. The filter cartridges used as a part of the absolute filtration program may have an initial clean pressure drop much higher than this due to the smaller pore size.

TABLE 9.1-6

SPENT FUEL POOL COOLING AND CLEANUP SYSTEM SINGLE ACTIVE FAILURE

	Component	Failure	Comments
1.	FPC pump	Fail to start when manually started.	Two pumps are provided. One pump is sufficient for residual heat removal.
2.	Fuel Storage Pool level switch	Fails to stop pump upon low level in pool.	Two level switches are provided - one dedicated to each FPC pump. One switch is sufficient for protection of one pump
3.	Motor-operated isolation valve for CCW outlet to FPC heat exchanger	Fails to close upon automatic actuation at start of post-LOCA recirculation.	Two separate component cooling water loops are provided. One CCW loop provides 100 percent of post-LOCA cooling capacity.
		Fails to open upon manual actuation when fuel pool cooling heat load can be accepted after a LOCA.	Two separate cooling loops are provided. One loop provides 100 percent of residual heat removal.

TABLE 9.1-7

FUEL HANDLING CRANE DATA (1)

Parameters	Name of Crane: Polar Crane	Cask Handling Crane see note 8	Spent Fuel Pool Bridge Crane	Refueling Machine
Capacity of main hoist	260 tons (5)	125 tons	2 tons	2.4 tons
Capacity of auxiliary monorail hoist (const)	25 tons	5 tons	5 ton manual	
Capacity of auxiliary monorail hoist (normal)	25 tons	5 tons & 2 tons (2)		1.5 tons
Capacity of main trolley	260 tons (5)	125 tons	5 tons	2.4 tons
Capacity of lift beam	500 tons			
Maximum main hoist speed (normal)	6.4 fpm	5.0 loaded 7.5 no load or light load fpm	21 fpm	40 fpm
Minimum main hoist speed (normal)	3 ipm	3.0 ipm	7 fpm	
Maximum auxiliary monorail hoist speed (normal)	51 fpm			
Minimum auxiliary monorail hoist speed (normal)	3 fpm			
Maximum trolley speed (normal)	51.5 fpm	20 fpm	30 fpm	40 fpm
Minimum trolley speed (normal)	6 fpm	12 ipm	10 fpm	
Maximum bridge speed (normal)	51.5 fpm	20 fpm	30 fpm	60 fpm
Minimum bridge speed (normal)	6 fpm	12 ipm	10 fpm	
Maximum load during plant Operation	167.5 tons	125 tons	1,966 lbs (Dry)	3,166 lbs
Normal expected load Range	0-167.5 tons	0 – 125 tons	0 - 1,671 lbs (wet)	
Maximum construction Load	475 tons			
Maximum main hoist speed (constr)	5 fpm			
Minimum main hoist speed (constr)	3 ipm			
Maximum trolley speed (constr)	51.5 fpm			
Minimum trolley speed (constr)	6 fpm			
Maximum bridge speed (constr)	51.5 fpm			
Minimum bridge speed (constr)	6 fpm			

TABLE 9.1-7 (Sheet 2)

Parameters	Name of Crane Polar Crane	Cask Handling Crane See note 8	Spent Fuel Pool Bridge Crane	Refueling Machine
Normal load range (constr)	0 – 475 tons			
Maximum monorail hoist Speed		18 fpm		20 fpm
Minimum monorail hoist Speed		1.0 fpm		0 fpm
Maximum monorail trolley Speed		30 fpm		
Minimum monorail trolley Speed		1.0 fpm		
Lifting limitation	28.5/32 ft (above vessel flange) See Note 7	Cask bottom 3 inches above fl El. 2047’-6”	25’-4” (Hook limit is 2066’ 11-15/16”) See Note 6	
Seismic class	(3)	(3)	(3)	(4)
Design standards				
General	CMAA No. 70 (1975)	CMAA No. 70 (1975)	CMAA No. 70 (1975)	CMAA No. 70
Structural	Covered by CMAA	See note 8 Covered by CMAA	Covered by CMAA	ASME Sect. III, App. XVII, Subarticle XVII-2200
Electrical	NFPA Vol. 5 Art. 610 1974-1975	NFPA Vol. 5 Art. 610 1974-1975	NFPA Vol. 5 Art. 610 1974-1975	NFPA Vol. 5 Art. 610 1974-1975
Materials	ASTM Std’s	ASTM Std’s	ASTM Std’s	ASTM Std’s
Others	OSHA 29 CFR 1910 & 1926	OSHA 29 CFR 1910 & 1926	OSHA 29 CFR 1910 & 1926	OSHA 29 CFR 1910 & 1926

NOTES:

(1) Rated speeds given are within 10 percent of the actual speeds.
(2) Refer to Figure 9.1-7: a 2-ton limit to the monorail hoist exists only over area B on Figure 9.1-7.
(3) Seismic Category I
(4) Component is non-Seismic Category I. Component is seismically designed and constructed if Position C.2 of Regulatory Guide 1.29 applies per Table 3.2-3.
(5) Capacity of main hoist & trolley = 260 tons concurrent with a SSE event
(6) When lifting a loaded RCC Handling Tool, the Spent Fuel Pool Bridge Crane hook height shall not exceed 2057’ 10”. When lifting a loaded BPRA Handling Tool the maximum hook height shall not exceed 2060’ 2”.
(7) 28.50’ SHA drop through the air, 32’ maximum drop through the air.
(8) The cask handling crane trolley and main hoist are designed, fabricated, and installed per CMAA No. 70 (2010), AISC 14 Edition, AWS D1.1 2010, and meets the requirements of NUREG-0554 and NUREG-0612 for single failure proof.

[TABLE 9.1-8 HAS BEEN DELETED]

TABLE 9.1-9

Original Head Weight without SHA Modification
Components for Drop Analysis

Items	Weight (lbs)
Head	165,150
CRDM (full length)	74,100
Rod position indicator coil stack	14,895
Seismic platform	11,100
Stud tensioner hoist	900
Dummy cans	848
Sling block platform	570
Head insulation	500
Lifting rig and vent shroud (15,125 + 5,250 lbs)	20,375
Load block	16,000
Studs, Nuts and Washers	37,150
Head shield and support structure	20,000
Contingency	10,000
Total (lbs)	371,588
Use (lbs)	**375,000**

Items	Weight (lbs)
Plenum (Including fans)	20,390
Cable support structure	2,937
Shroud extension	2,861
Radiation shield	20,373
CRDM cable bridges	730
DRPI cable bridge	1,530
Cables on CSS	1,460
Cables on CRDM bridge	557
Cables on DRPI bridge	891
Transition Assembly	554
Total	**52,283**

TABLE 9.1-10

Final Head Weight with SHA Modification Components
for Drop Analysis

Item No.	Item Description	Weight (lbs)	Reference
1	Head	161,150	Reference 12
2	CRDM (full length)	74,100	Reference 12
3	Rod position indicator coil stack	14,895	Reference 12
4	Seismic platform	12,550	Reference 12
5	Stud tensioner hoist	900	Reference 12
6	Dummy Cans	848	Reference 12
7	Sling block platform	597	Reference 12
8	Head insulation	1,700	Reference 12
9	Shroud support ring	3,619	Reference 12
10	Upper cooling shroud	1,508	Reference 12
11	Lifting rig	15,936	Reference 12
12	Tie rods	2,259	Reference 12
13	Ladder	149	Reference 12
14	Head vent pipe	657	Reference 12
15	Studs, nuts, and washers (not to be considered, see Attachment B)	37,150	Reference 12
16	Added SHA Weight	52,283	From Table 9.1-9
17	**Total Head Assembly Weight without Items 12 and 15**	**341,402**	-
18	Bottom Block Assembly	11,750	Dwg. M-063-00087
19	Weight of rope for a conservative length of 60 feet = 2 lbs/ft x 16 ropes x 60 ft	2,880	
20	Weight of Lead Blankets	300	
21	**Total Head Assembly Weight (Add Items 17 to 20)**	**356,332**	Reference 11
22	**Critical Life Load $-P_{ir}$ for Drop Analysis**	**357,000**	

Table 9.1-11

Vertical Deformation of Reactor Vessel and Supports due to a Postulated SHA Drop Accident

Supporting Component	**Elastic Deformation (inch)**	**Plastic Deformation for 28.5 feet Drop Height (inch)**	**Plastic Deformation for 32 feed Drop* Height (inch**
Vessel Plus Nozzles	0.12	None	None
Westinghouse Cooling Box	0.02	None	None
Bechtel Embedded Framing	0.22	0.55	0.64
Subtotals	0.36	0.55	0.64
Total Displacement (Elastic + Plastic)	**0.91 inch for 28.5 feet Drop Height** **1.00 inch for 32 feet Drop Height**		
Allowable Displacement	**2.20 inch**		

Reactor Vessel Nozzle Stresses due to Postulated SHA Drop Accident.

Supporting Component	**Allowable Nozzle Stress (psi)**	**Principal Nozzle Stress for 28.5 feet Drop Height (psi)**	**Principal Nozzle Stress for 32 feet Drop Height (psi)***
Vessel Nozzles	84,000	79,019	83,719
Margin Factor (Nozzle Stress/Allowable Stress)	**-**	**0.94**	**1.00**

12999

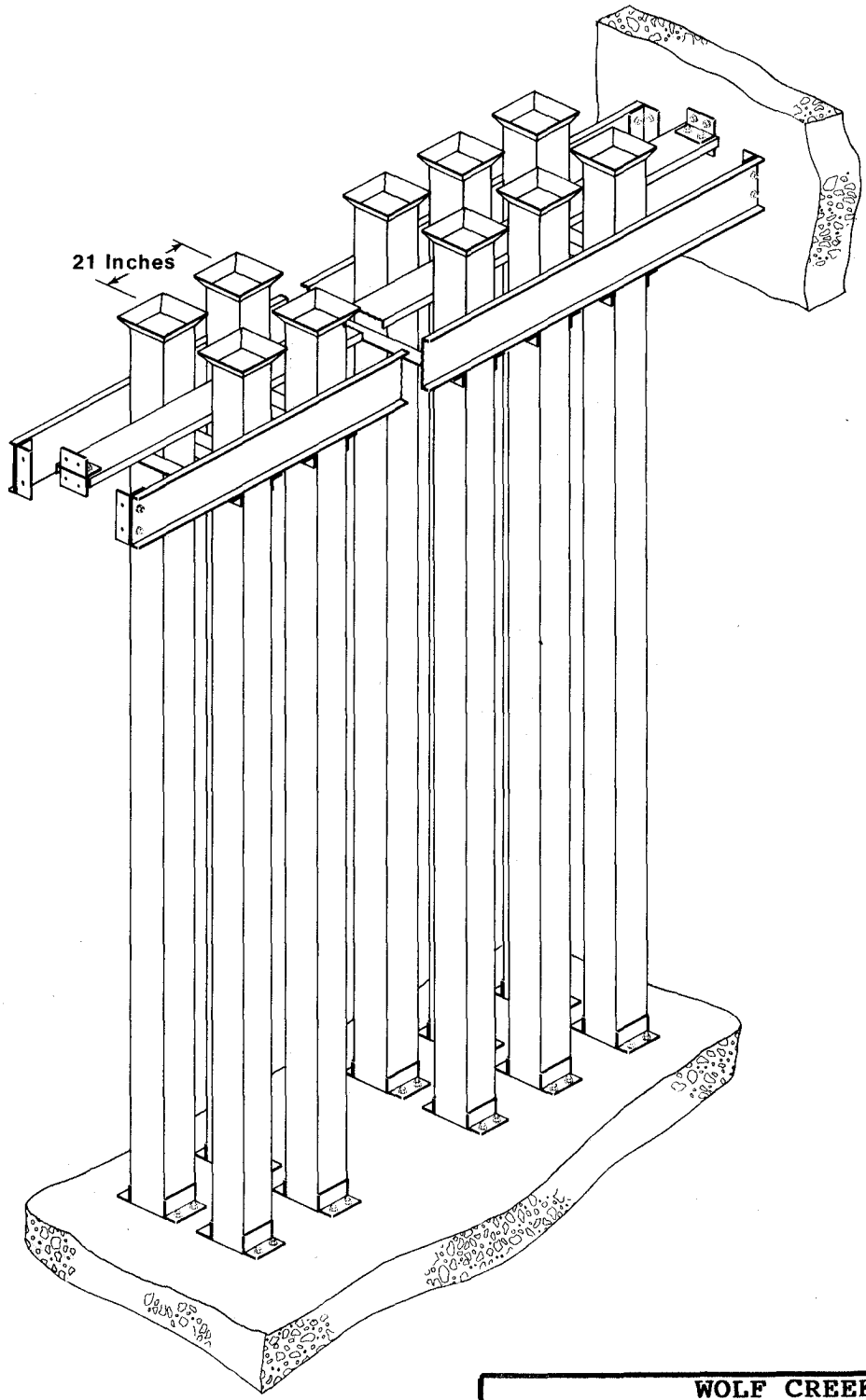

Rev. 0

WOLF CREEK
UPDATED SAFETY ANALYSIS REPORT

FIGURE 9.1-1

NEW FUEL STORAGE RACK

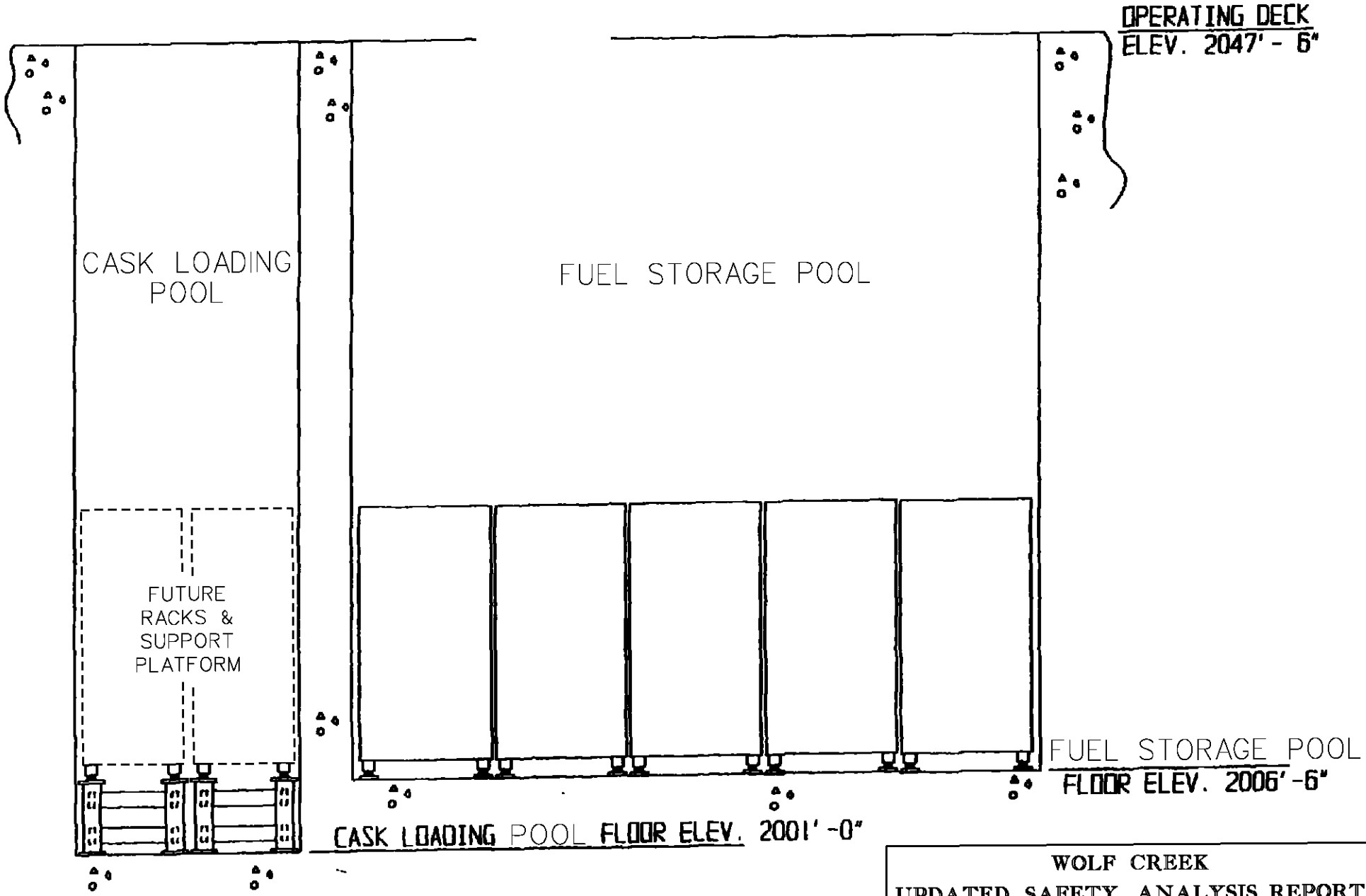

WOLF CREEK
UPDATED SAFETY ANALYSIS REPORT

ELEVATION VIEW OF RACK LAYOUT
FIGURE 9.1-2
(SHEET 1 OF 3)

REV. 14

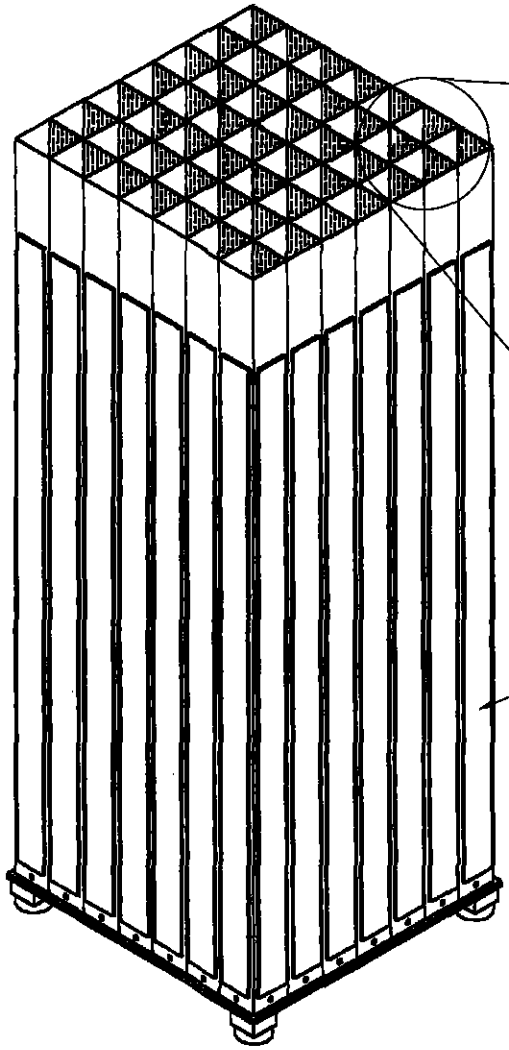

PICTORIAL VIEW OF TYPICAL RACK STRUCTURE

(ACTUAL INDIVIDUAL RACK SIZE VARIES IN TOTAL NUMBER OF STORAGE CELLS)

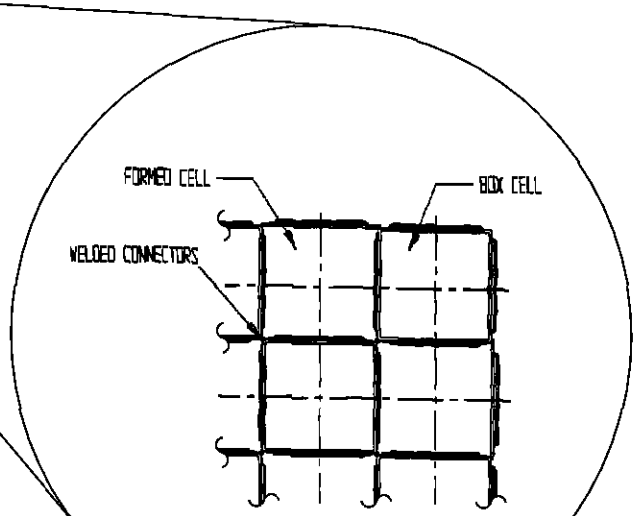

TYPICAL ARRAY OF STORAGE CELLS
(NON-FLUX TRAP CONSTRUCTION)

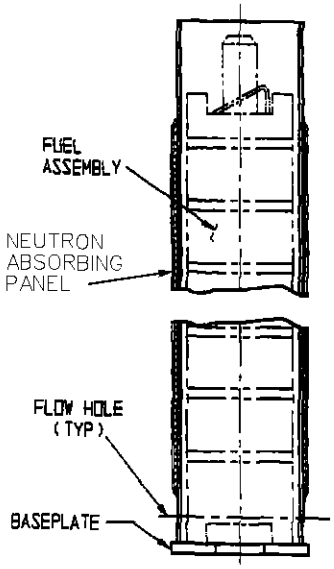

PWR CELL IN ELEVATION VIEW

WOLF CREEK UPDATED SAFETY ANALYSIS REPORT
RACK STRUCTURE & MISC. DETAILS FIGURE 9.1-2 (SHEET 2 OF 3)

REV. 14

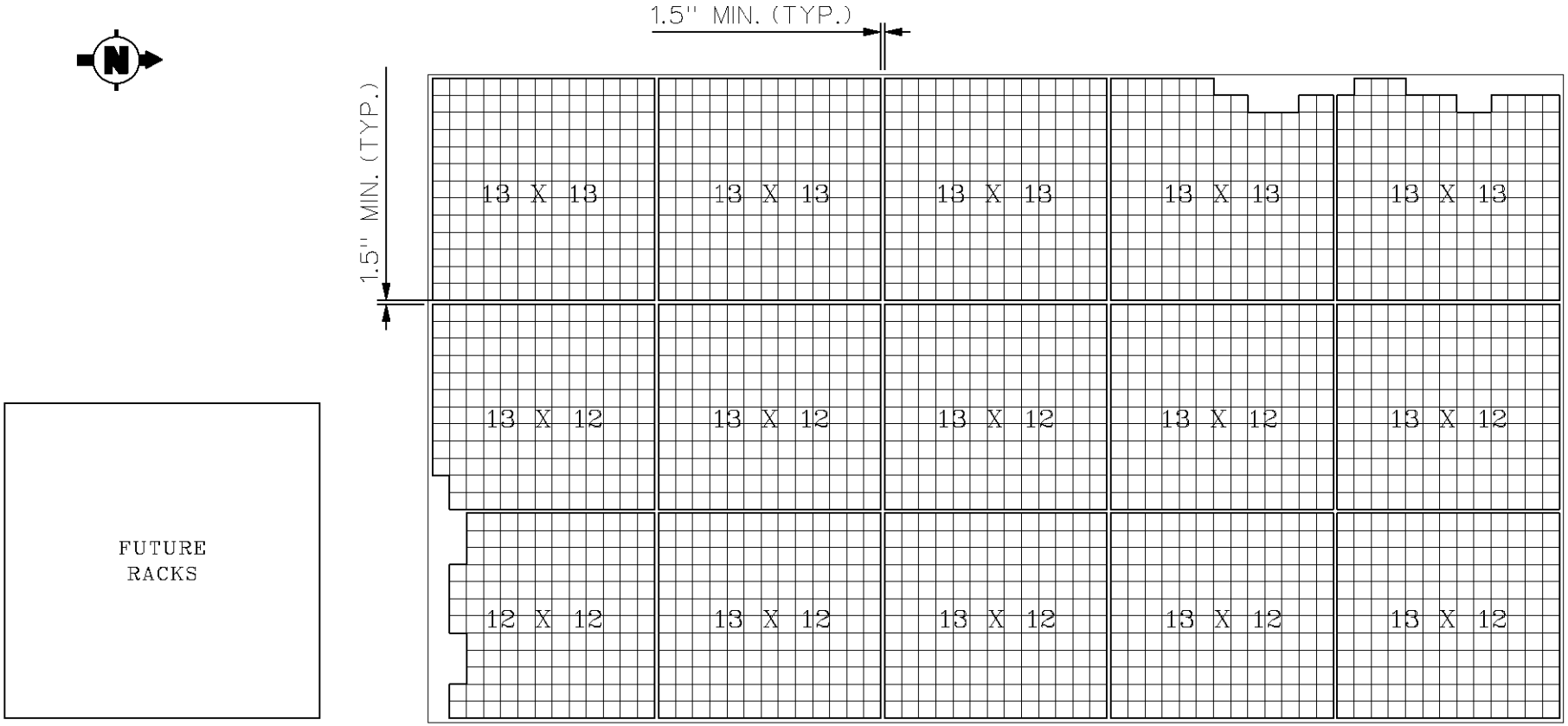

WOLF CREEK
UPDATED SAFETY ANALYSIS REPORT

POOL LAYOUT FOR WOLF CREEK
FIGURE 9.1-2
(SHEET 3 OF 3)

REV. 14

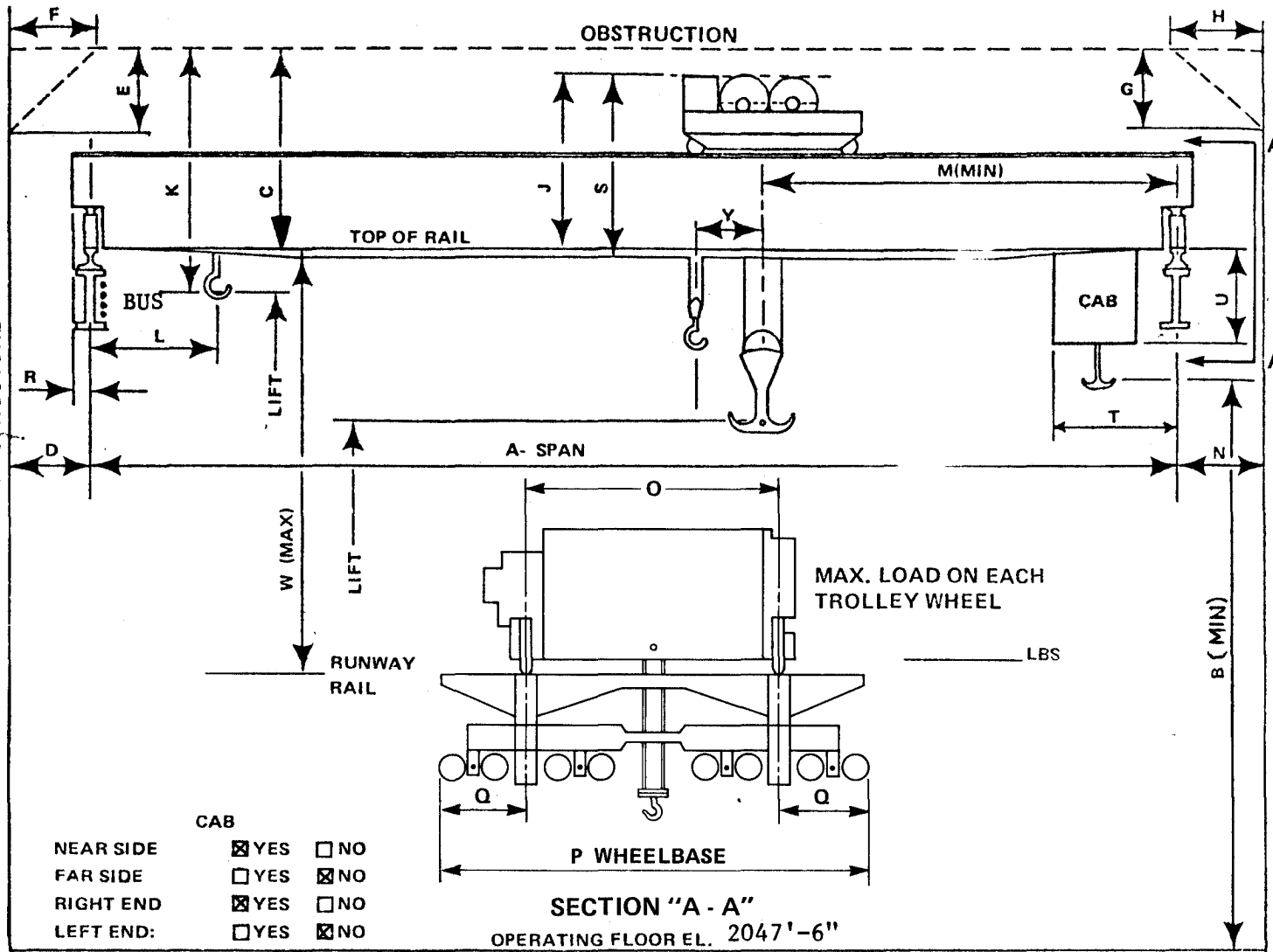

CAB		
NEAR SIDE	☒ YES	☐ NO
FAR SIDE	☐ YES	☒ NO
RIGHT END	☒ YES	☐ NO
LEFT END:	☐ YES	☒ NO

CAPACITY - MAIN 260 TONS
CAPACITY - AUX. 25 TONS
LIFT - MAIN 103 FT 11 IN
LIFT - AUX. 126 FT 3 IN
A 134 FT 0 IN
B 72 FT 10 IN (HIGH HOOK)
C N/A FT N/A IN
D 3 FT 0 IN
E 0 FT 0 IN
F 0 FT 0 IN
G 0 FT 0 IN

H 0 FT 0 IN
J 18 FT 6 IN
K N/A FT N/A IN
L 9 FT 9 IN
M 6 FT 6 IN
N 3 FT 0 IN
O 25 FT 0 IN
P 45 FT 0 IN
Q 10 FT 0 IN
R 1 FT 6 IN
S FT IN
T 14 FT 9 IN

U 9 FT 0 IN
W 121 FT 0 IN
Y 4 FT 6 IN
LENGTH OF MAIN LINE
RUNWAY N/A FT N/A IN
MAX. LOAD ON EACH
WHEEL 180,300 LBS
RUNWAY RAIL
175 LBS

NOTE: "NEAR SIDE" & "LEFT/RIGHT" - FACING CRANE DRIVE SIDE.
Top of Rail Elevation 2122'-6" "N" is 1'-8" to Obstruction

WOLF CREEK
UPDATED SAFETY ANALYSIS REPORT

FIGURE 9.1-4

ARRANGEMENT DRAWING CONTAINMENT BUILDING POLAR CRANE

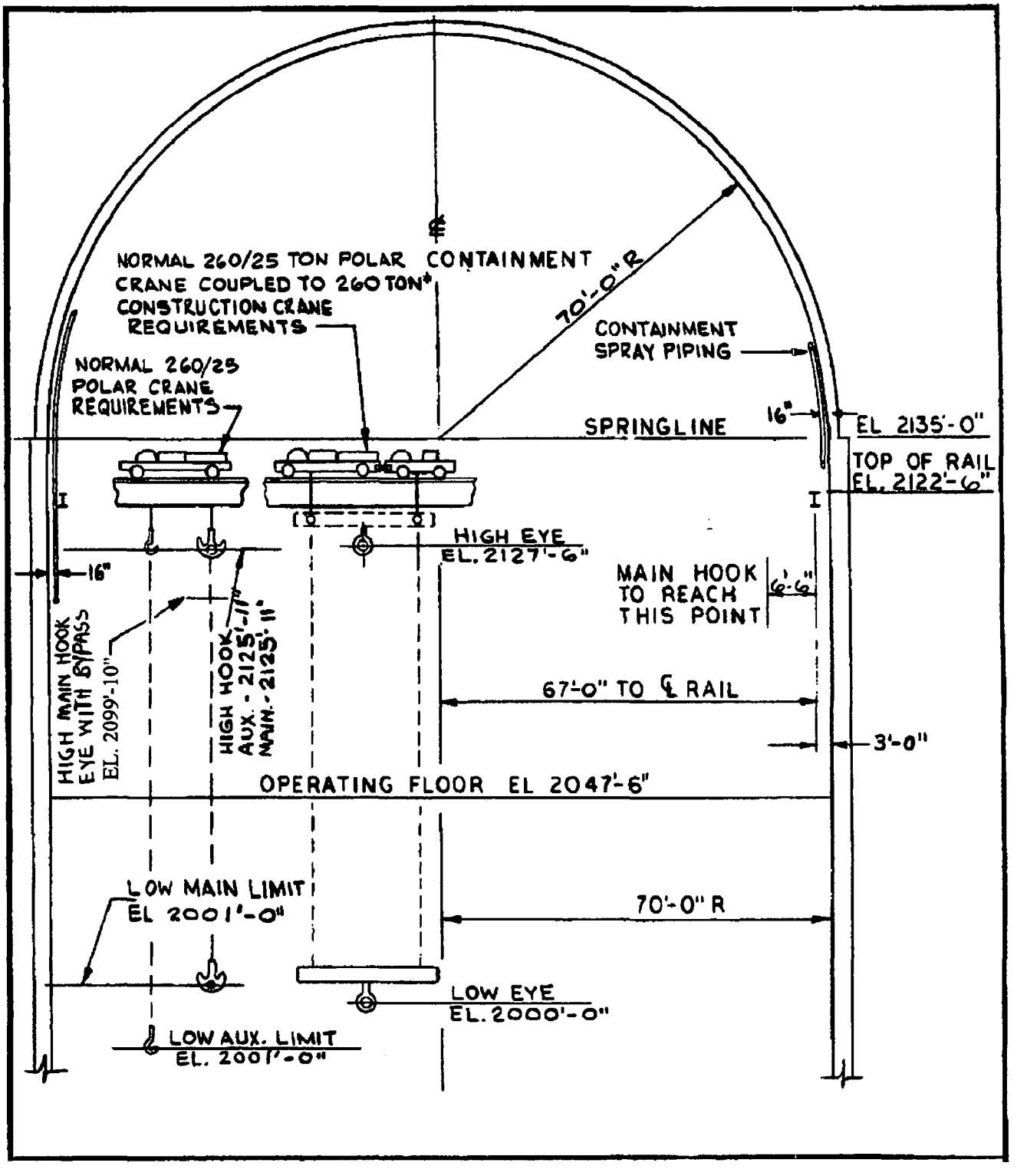

ACCESS TO CRANE IS AT ELEVATION 2113'-8"

NOTES:

(1) Top/Reactor Flange Elevation = 2021'-6"

(2) Total height Of Simplified Head Assembly (SHA) = 574.40" (M-797-00147-W05)

WOLF CREEK UPDATED SAFETY ANALYSIS REPORT	REV.22
FIGURE 9.1-5 HOOK LIMITS FOR CONTAINMENT BUILDING POLAR CRANE	

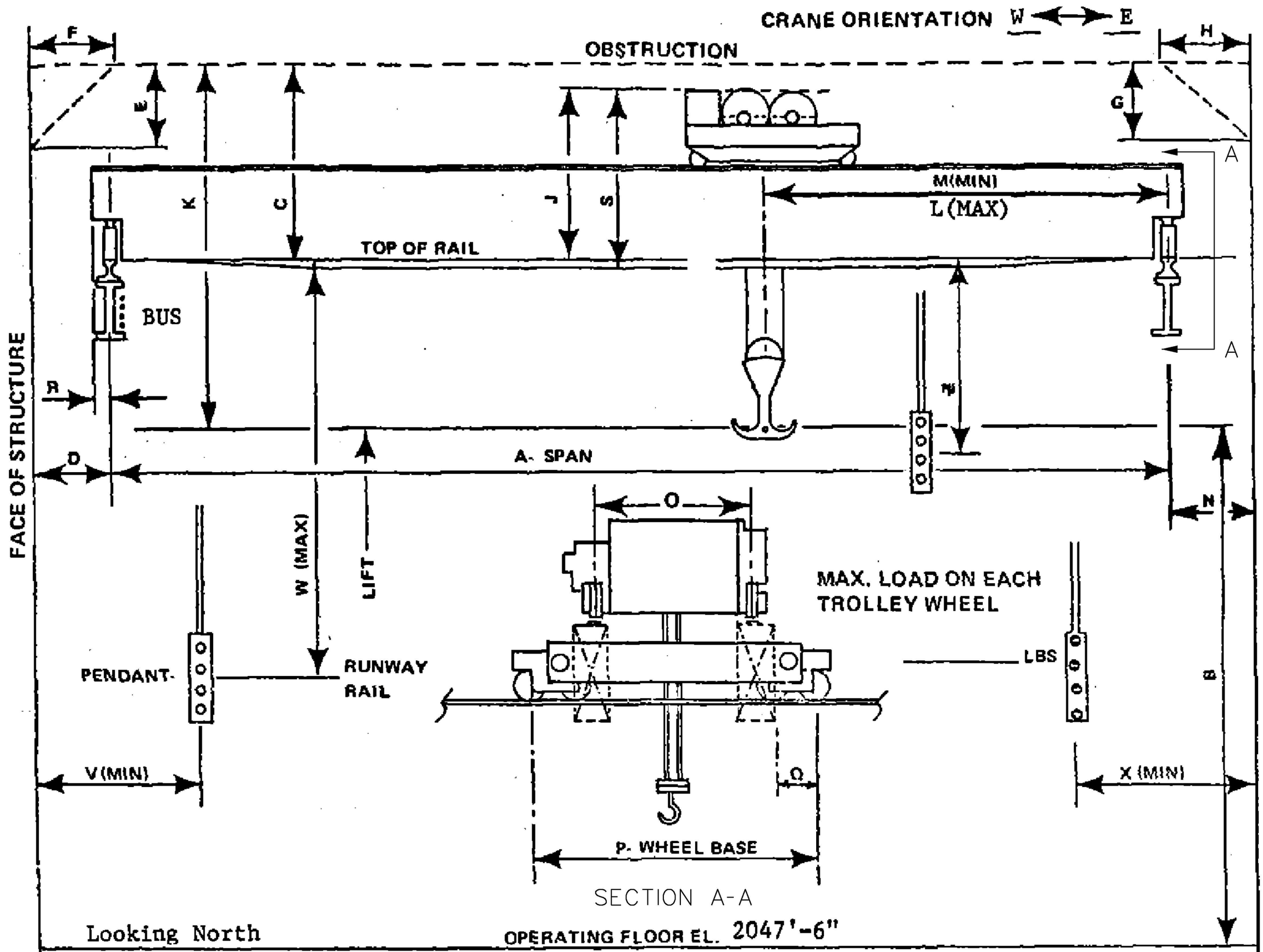

CAPACITY - MAIN 125 TONS
Aux 5 Tons**
LIFT - MAIN 81 FT 1 IN
Lift-Aux. 71 Ft. 6 In.
A 78 FT 6 IN
B 33 FT 7 IN (HIGH HOOK)
C 11 FT 11-1/2 IN
D 1 FT 3 IN
E 0 FT 0 IN
F 0 FT 0 IN
G 0 FT 0 IN

AREA OF CHANGE

AREA OF CHANGE

H 0 FT 0 IN
J 11 FT. 8-1/2 IN (MAX.ALLOWABLE)
K FT IN
L 40 FT 10 IN
M 13 FT 0 IN
N 1 FT 3 IN
O 15 FT 6 IN
P 21 FT 0 IN
Q FT IN
R FT IN
S FT IN

AREA OF CHANGE

V 5 FT 1 IN
W 80 FT 6 IN
X N/A FT N/A IN

LENGTH OF MAIN LINE
RUNWAY 100 FT 0 IN
MAX. LOAD ON EACH
WHEEL LBS
RUNWAY RAIL
Size 175 LBS
Z 8 FT 0 IN *

NOTE: "NEAR SIDE" & "LEFT/RIGHT" - FACING CRANE DRIVE SIDE.
Top of Rail - 2083'-6 1/2"

** 5 tons, 2 tons over new fuel storage area
Aux. hoist is bridge mounted monorail system

* HIGH PENDANT

REV. 32

WOLF CREEK
UPDATED SAFETY ANALYSIS REPORT

Figure 9.1-6, REV.

ARRANGEMENT DRAWING FUEL BUILDING CASK HANDLING CRANE

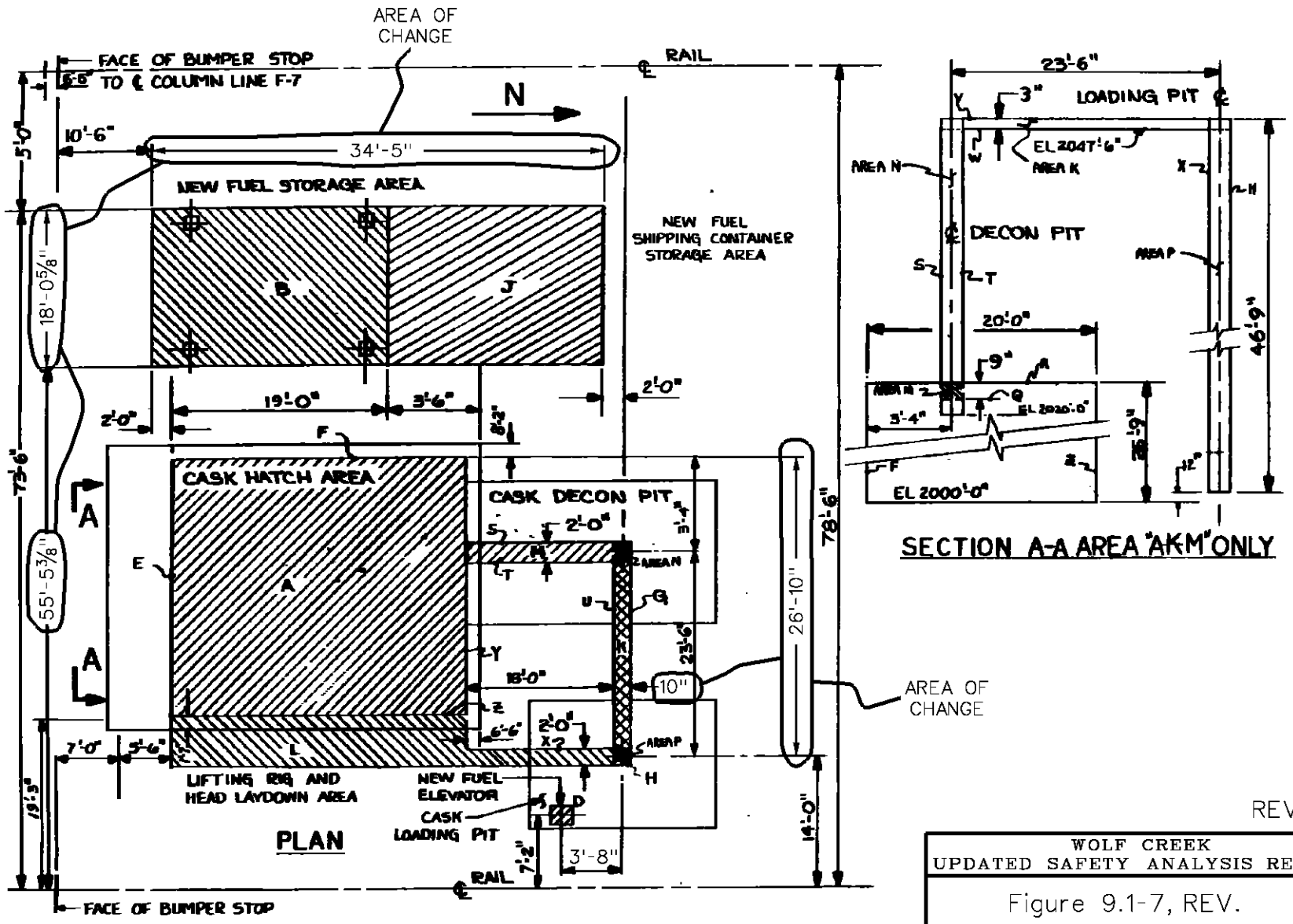

REV. 14

WOLF CREEK
UPDATED SAFETY ANALYSIS REPORT

Figure 9.1-7, REV.

HOOK LIMITS FOR FUEL BUILDING CASK HANDLING CRANE

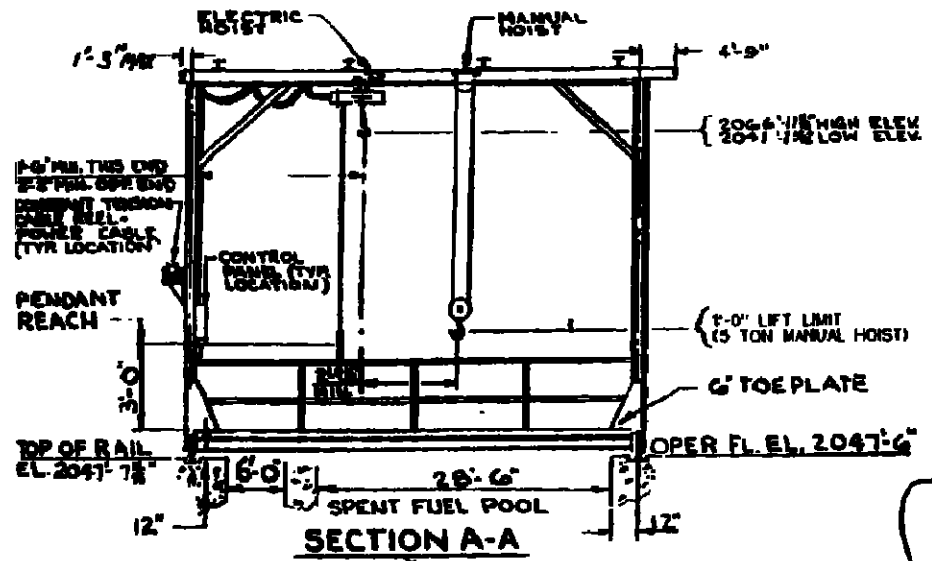

SECTION A-A

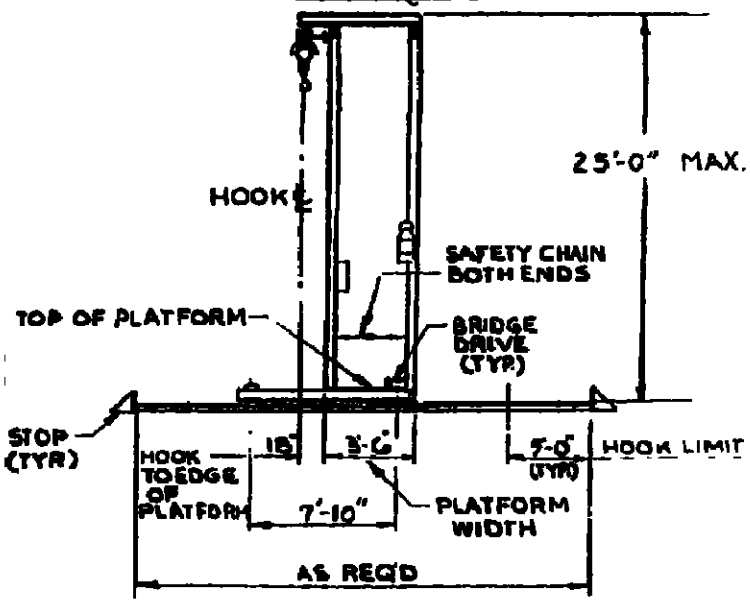

SECTION B-B

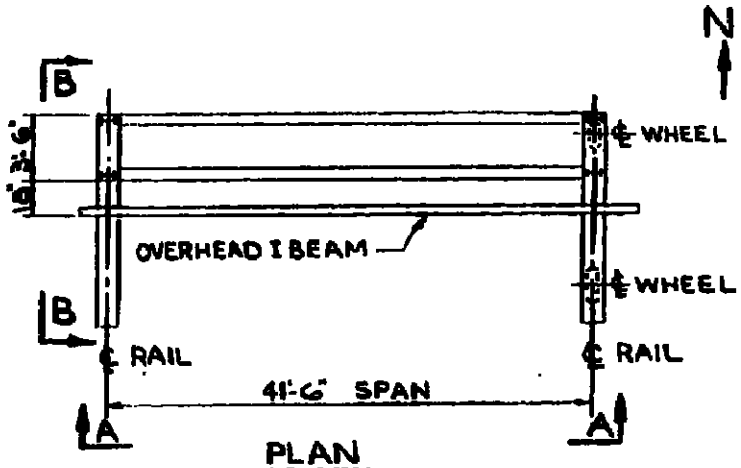

PLAN

NOTES:

FOR INFORMATION REGARDING SPENT FUEL BRIDGE CRANE ACCESS TO THE FAR NORTH EDGE OF FUEL POOL, SEE CCP 09356.

AREA OF CHANGE

CAPACITY:	BRIDGE	- 5 TON
	ELEC. HOIST	- 2 TON
	MANUAL HOIST	- 5 TON
MAX. LIFT SPEED		- 21 FPM ± 10%
MIN. LIFT SPEED		- 7 FPM ± 10%
MAX. BRIDGE SPEED		- 30 FPM ± 10%
MIN. BRIDGE SPEED		- 10 FPM ± 10%
MAX TROLLEY SPEED		30 FPM ± 10%
MIN TROLLEY SPEED		10 FPM ± 10%

MAINTENANCE PLATFORM - NOT SHOWN
TOP OF RAIL ELEVATION 2047'-7 1/8"

Rev. 15

WOLF CREEK
UPDATED SAFETY ANALYSIS REPORT

FIGURE 9.1-8

ARRANGEMENT DRAWING
SPENT FUEL BRIDGE CRANE

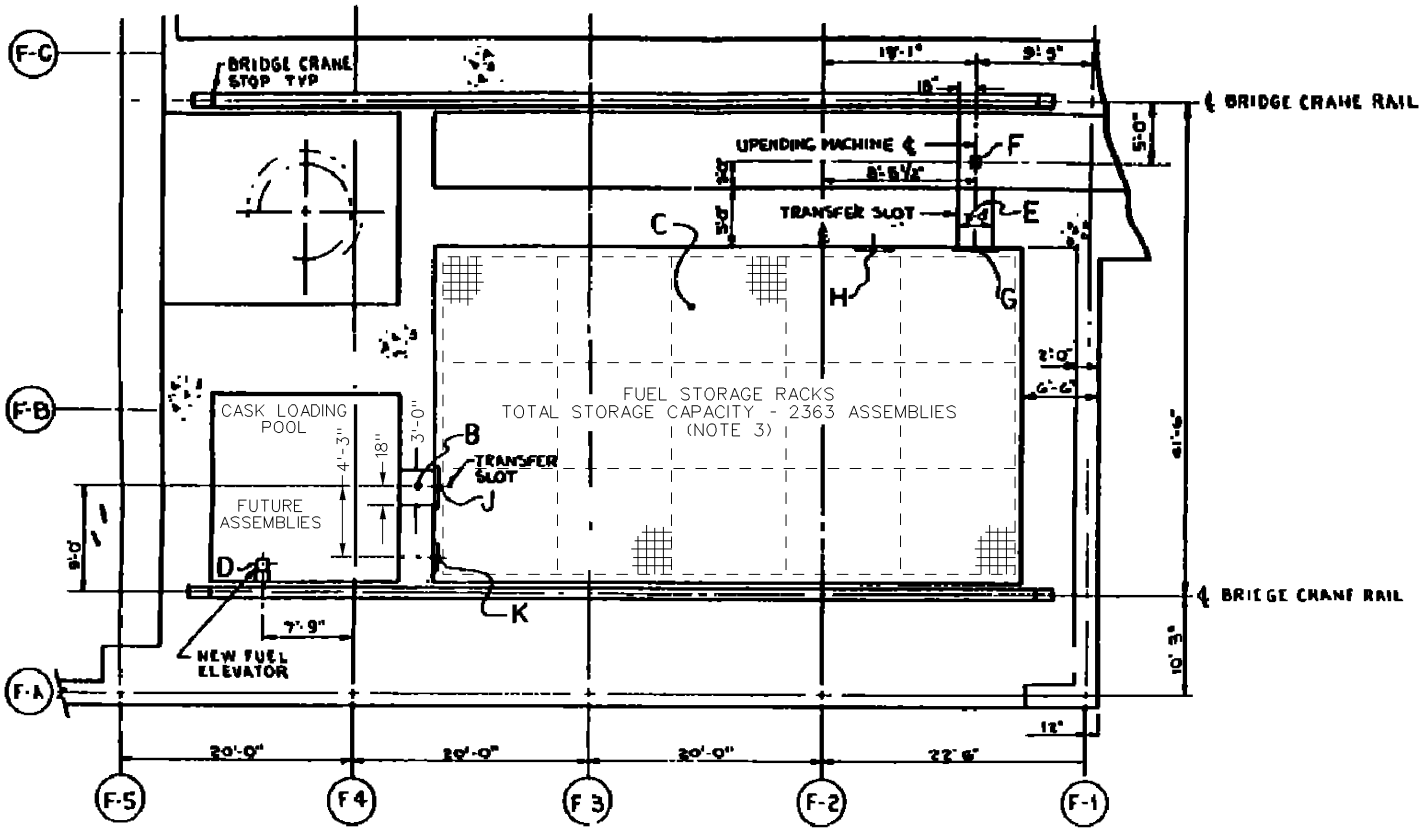

PLAN

→ N

NOTES

1. SPACING BETWEEN FUEL ELEMENT ASSEMBLIES TO BE 8.99" ON CENTER. INDEX POSITIONING OF CRANE TO BE DESIGNED TO HANDLE ASSEMBLIES.

2. SHOWS NORMAL CRANE TRAVEL LIMITS. THESE LIMITS ARE NOT APPLICABLE WHEN CONCERNING CELLS LOCATED NEAR THE PERIPHERY OF THE FUEL STORAGE POOL WALLS.

AREA OF CHANGE

WOLF CREEK
UPDATED SAFETY ANALYSIS REPORT

HOOK LIMITS FOR SPENT FUEL POOL BRIDGE CRANE
FIGURE 9.1-9

12999

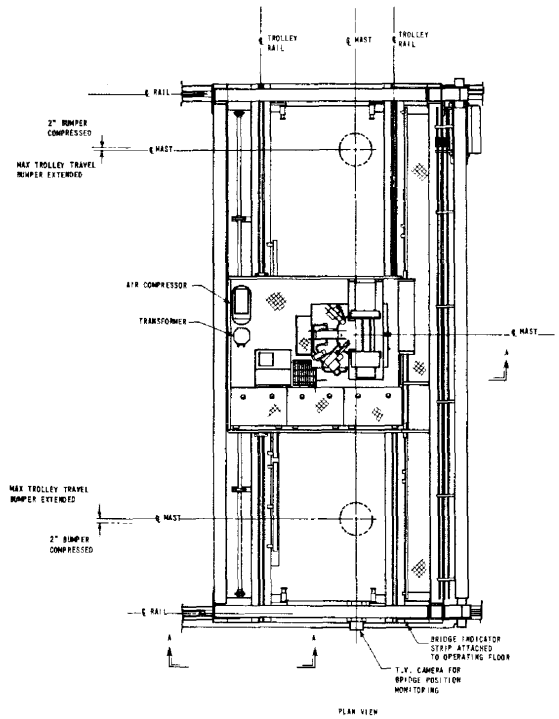

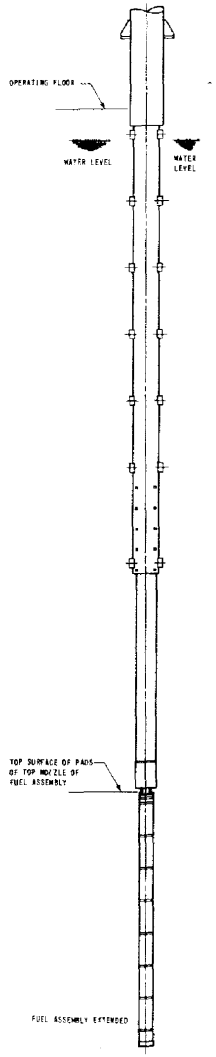

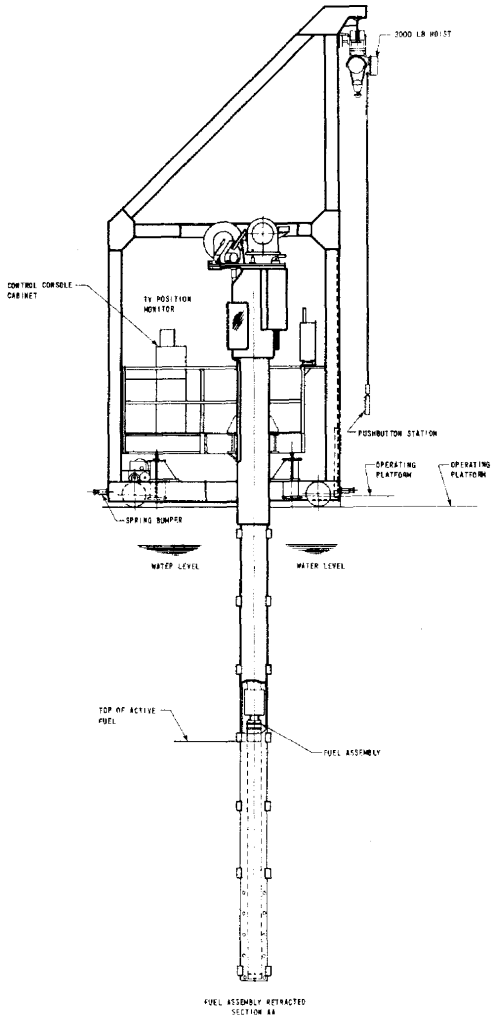

Rev. 0

WOLF CREEK
UPDATED SAFETY ANALYSIS REPORT

FIGURE 9.1-10

REFUELING MACHINE

WOLF CREEK

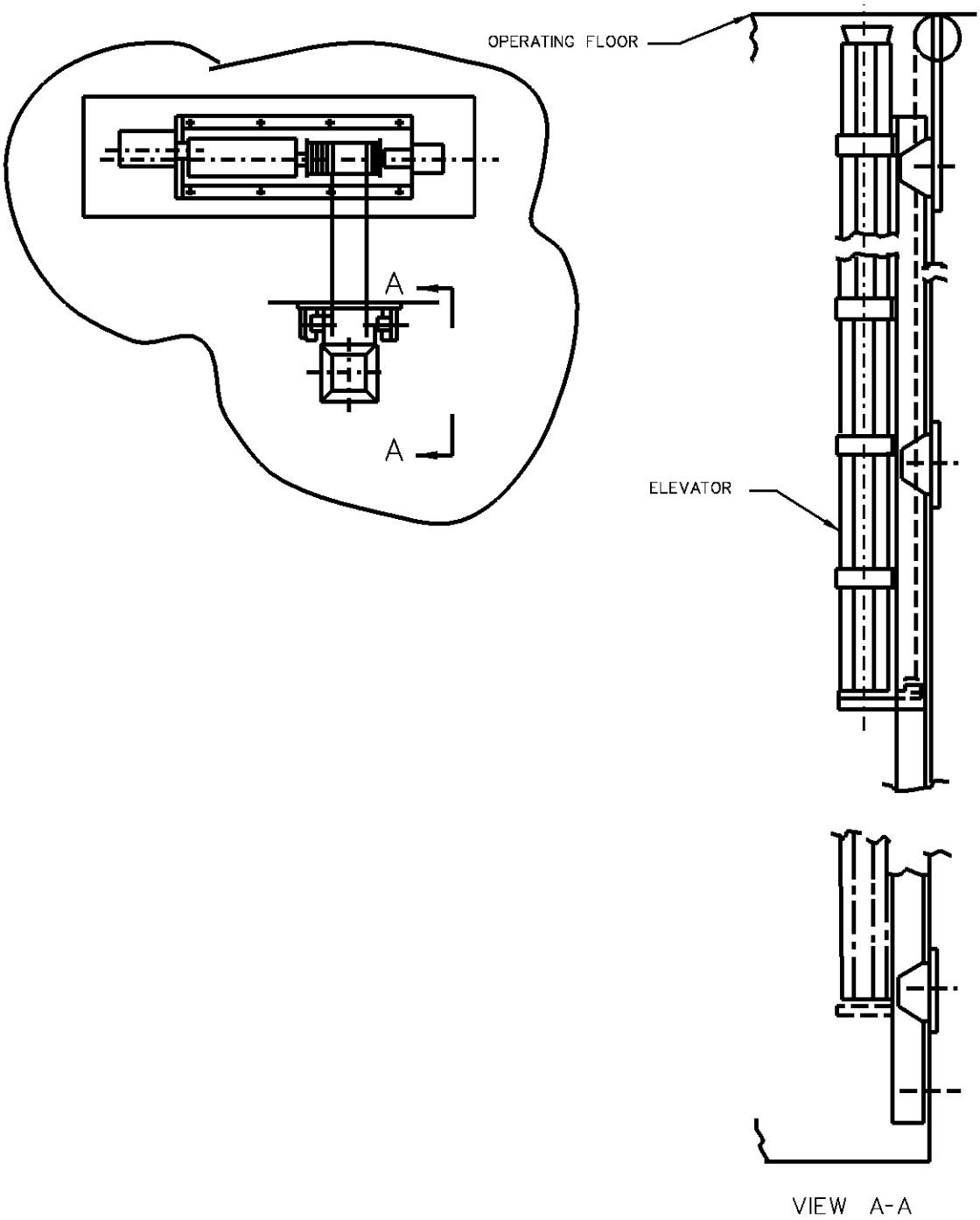

WOLF CREEK
UPDATED SAFETY ANALYSIS REPORT

FIGURE 9.1-11

NEW FUEL ELEVATOR

Rev. 14

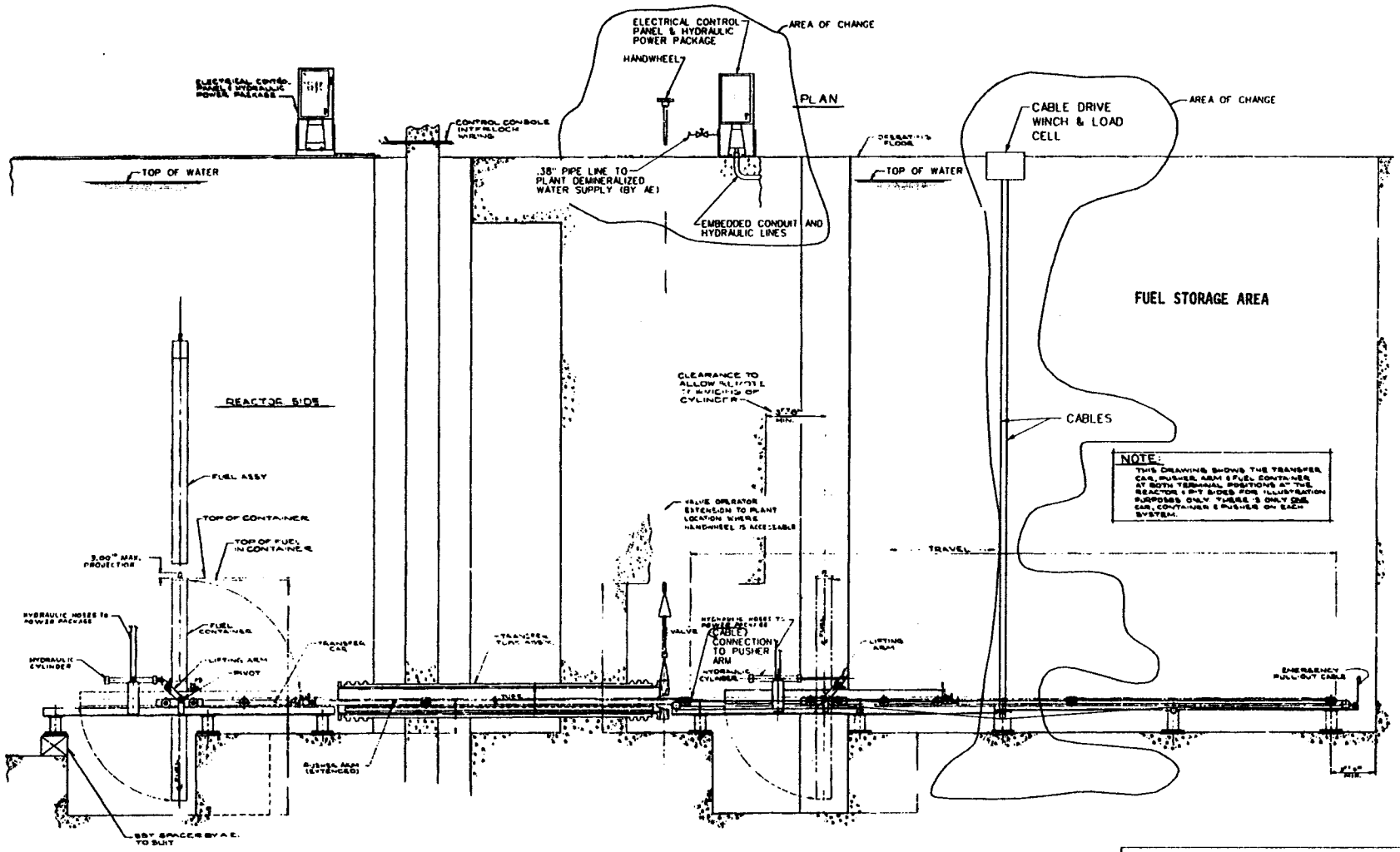

Rev. 11

WOLF CREEK
UPDATED SAFETY ANALYSIS REPORT

FIGURE 9.1-12

FUEL TRANSFER SYSTEM

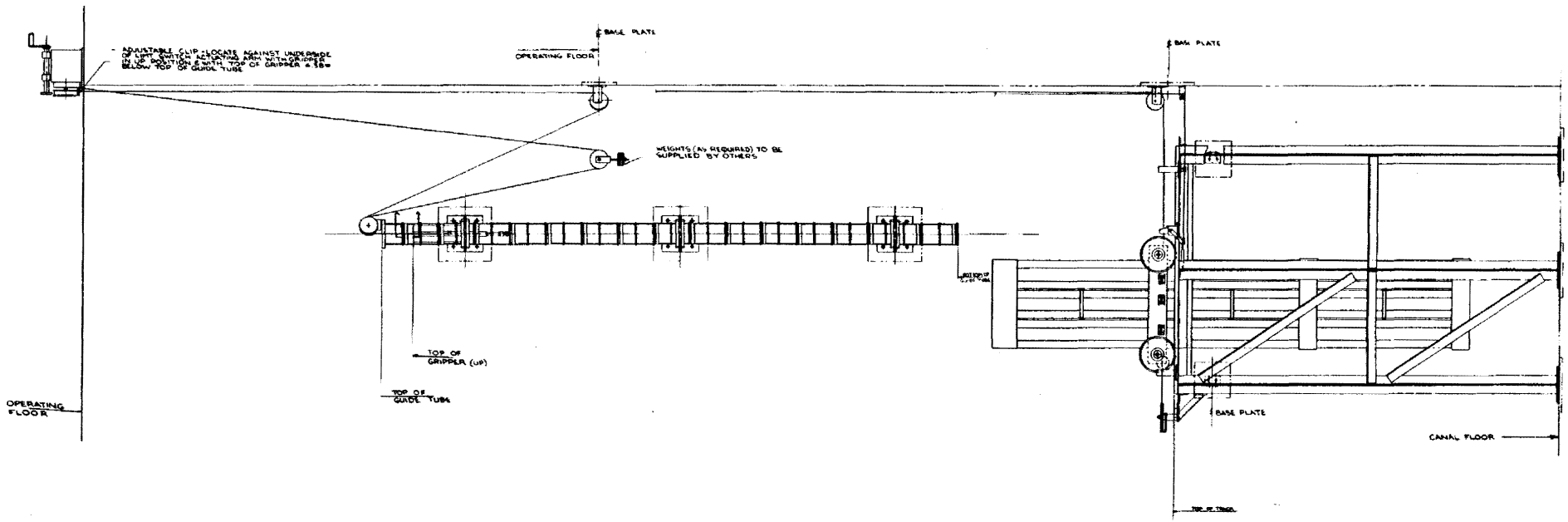

Rev. 0

WOLF CREEK
UPDATED SAFETY ANALYSIS REPORT

FIGURE 9.1-13

ROD CLUSTER CONTROL CHANGING FIXTURE

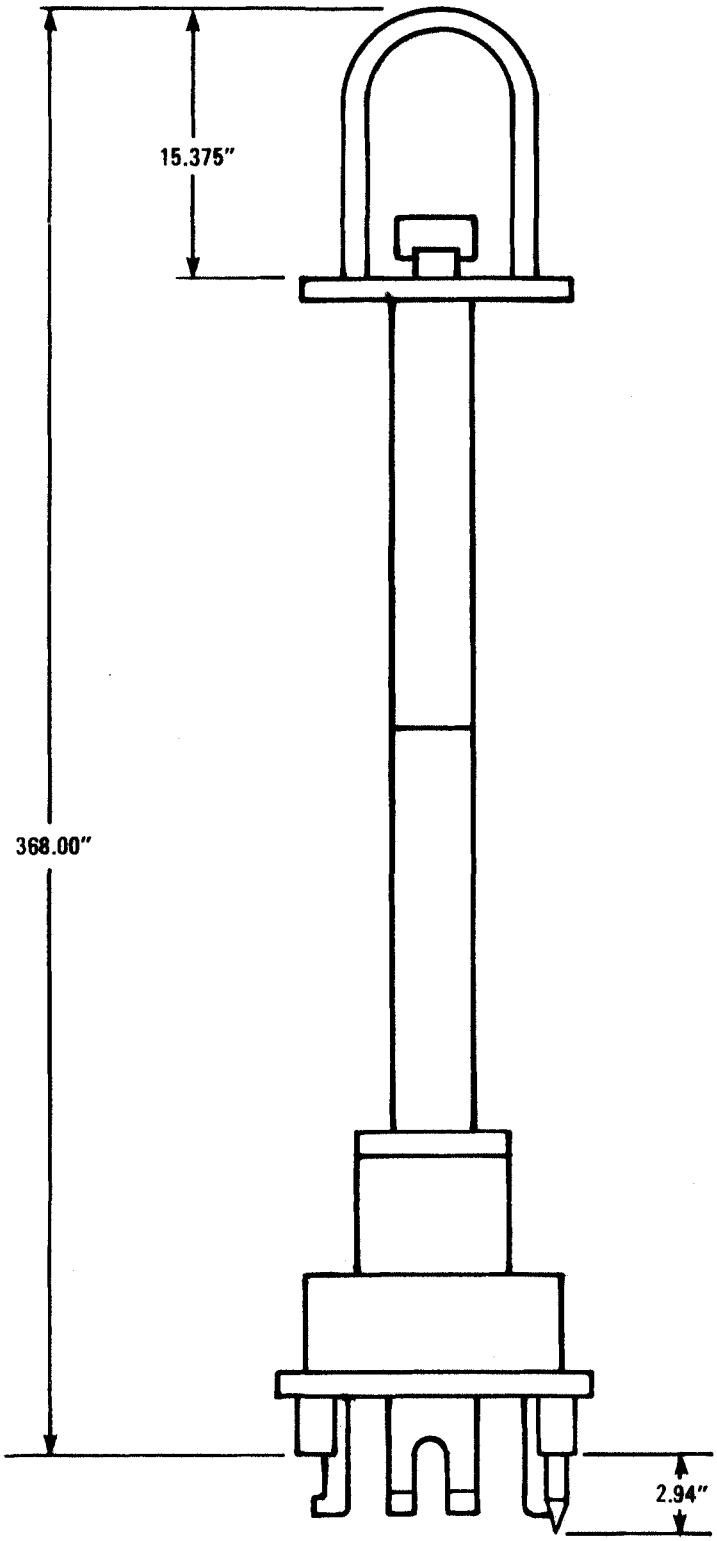

WOLF CREEK
UPDATED SAFETY ANALYSIS REPORT

FIGURE 9.1-14

SPENT FUEL HANDLING TOOL

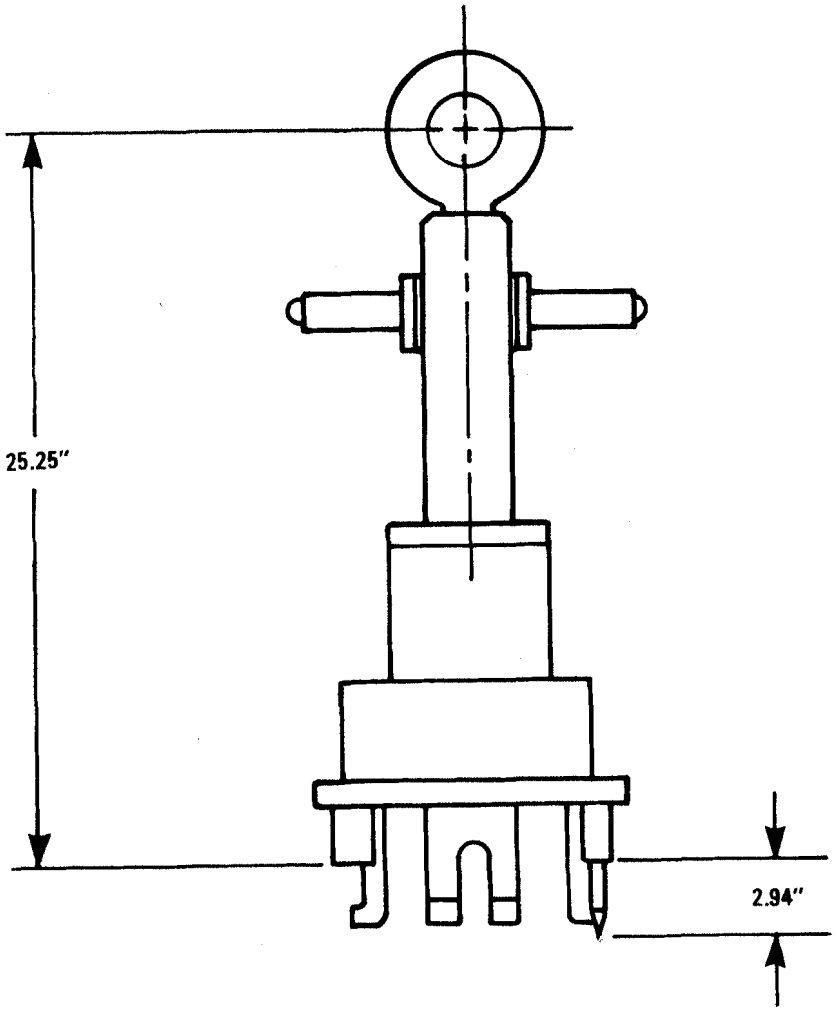

Rev. 0

WOLF CREEK
UPDATED SAFETY ANALYSIS REPORT

FIGURE 9.1-15

NEW FUEL HANDLING TOOL

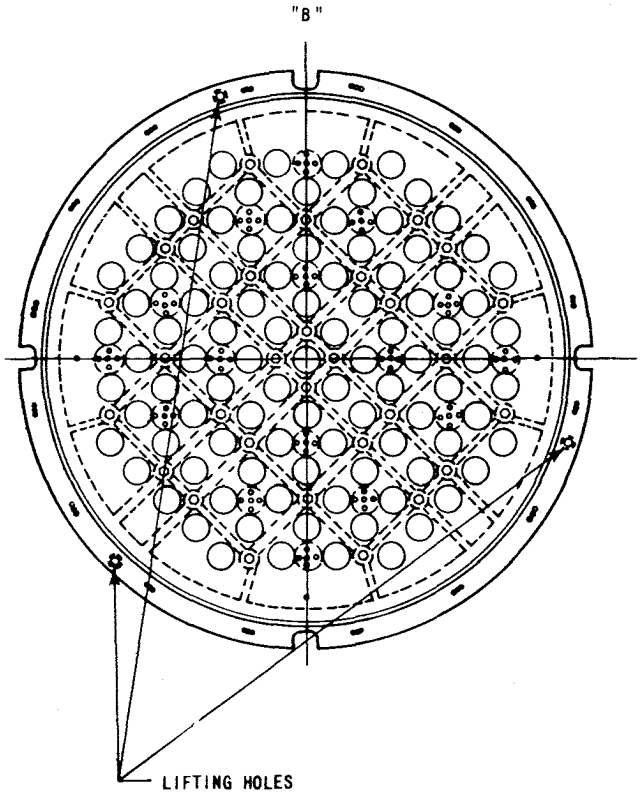

PLAN VIEW OF UPPER CORE SUPPORT STRUCTURE

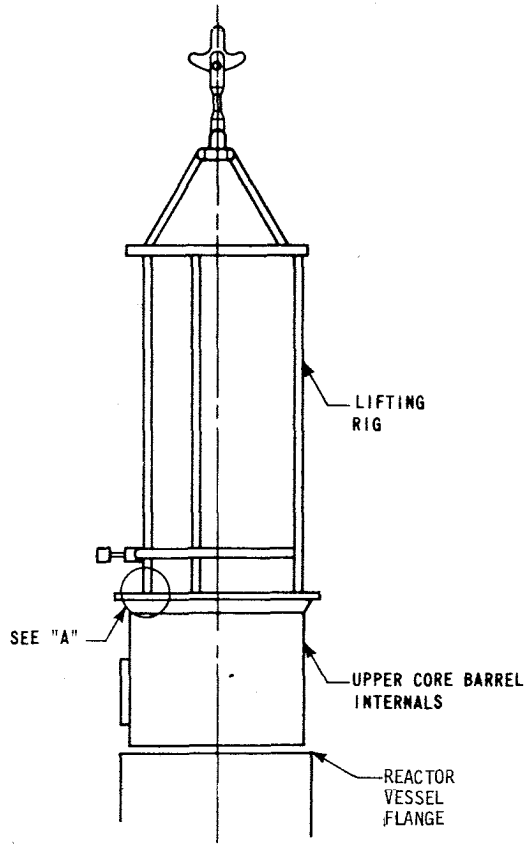

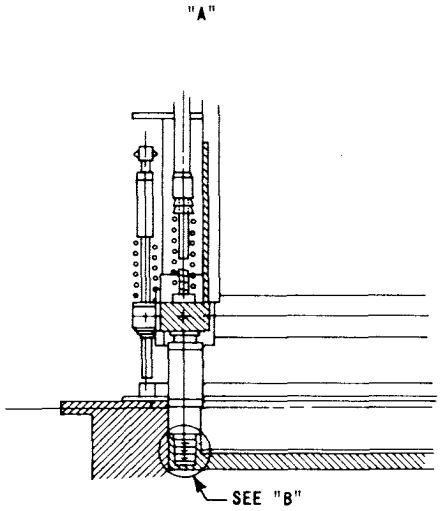

WOLF CREEK
UPDATED SAFETY ANALYSIS REPORT

FIGURE 9.1-16

UPPER CORE BARREL HANDLING FIXTURE

17942-1

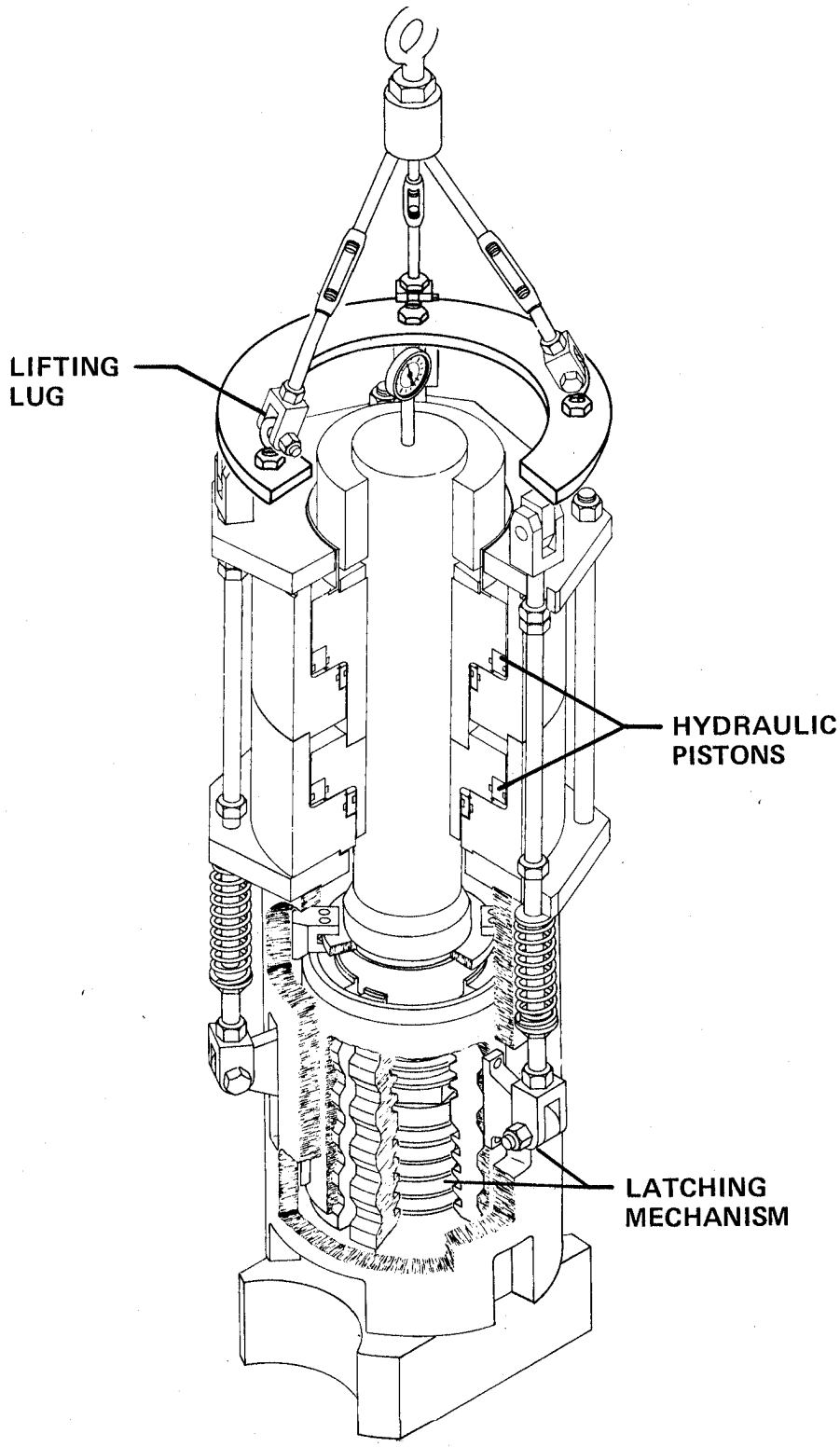

WOLF CREEK UPDATED SAFETY ANALYSIS REPORT
FIGURE 9.1-17 QUICK-ACTING STUD TENSIONER

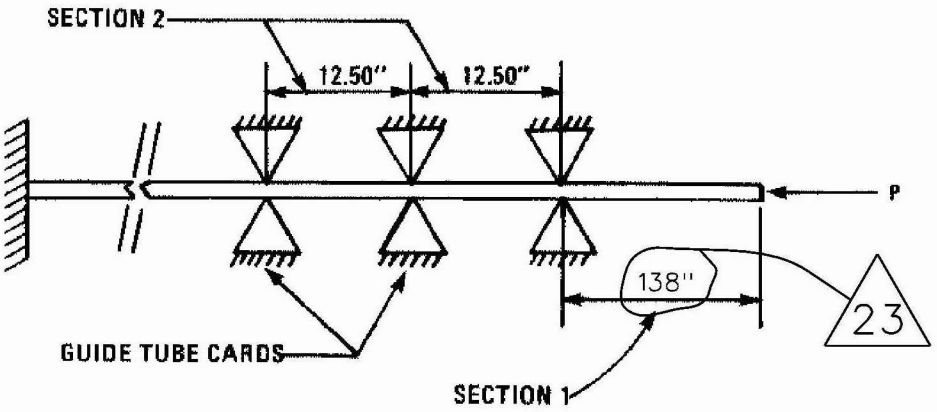

SECTION 2 OCCURS A TOTAL OF 6 TIMES DOWN THE GUIDE TUBE

RADIAL CLEARANCE BETWEEN DRIVE ROD AND CARD = 0.325"
LARGEST DIAMETER THAT CAN PASS THROUGH GUIDE TUBE CARD - 2.4"

REV. 23

WOLF CREEK
UPDATED SAFETY ANALYSIS REPORT

Figure 9.1-18

MODEL OF CRITICAL BUCKLING LOAD FOR THE DRIVE ROD

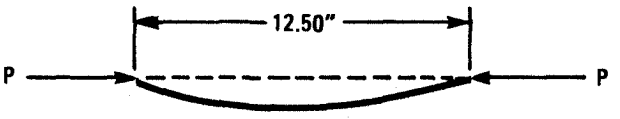

Rev. 0

WOLF CREEK
UPDATED SAFETY ANALYSIS REPORT

FIGURE 9.1-19

BUCKLING LOAD FOR SECTION 2

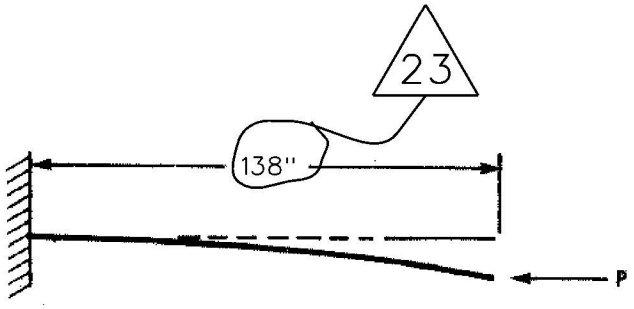

REV. 23

WOLF CREEK
UPDATED SAFETY ANALYSIS REPORT

Figure 9.1-20

BUCKLING LOAD FOR SECTION 1

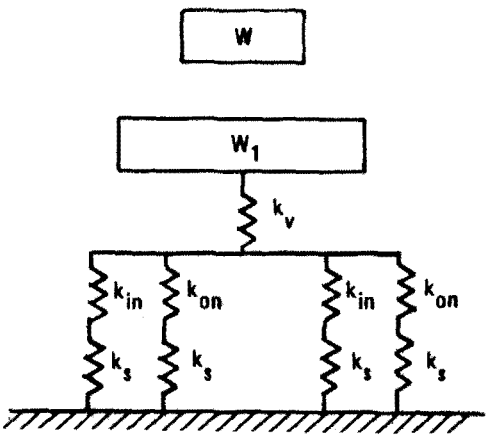

W = WEIGHT OF THE UPPER PACKAGE, HEAD POLAR CRANE HOOKS, AND CABLE
W_1 = WEIGHT OF THE VESSEL FLANGE, NOZZLES, AND REGION IN BETWEEN
k_{in} = SPRING CONSTANT OF INLET NOZZLE REGION
k_{on} = SPRING CONSTANT OF OUTLET NOZZLE REGION
k_s = SPRING CONSTANT OF SUPPORTS
k_v = SPRING CONSTANT OF VESSEL AND FLANGE USING EQUIVALENT CYLINDER ANALYSIS

WOLF CREEK
UPDATED SAFETY ANALYSIS REPORT

FIGURE 9.1-21

SPRING MASS SYSTEM OF THE HEAD UPPER PACKAGE AND REACTOR VESSEL

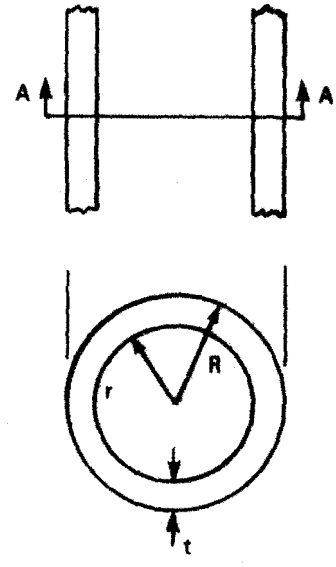

Rev. 0

WOLF CREEK
UPDATED SAFETY ANALYSIS REPORT

FIGURE 9.1-22

UPPER PORTION OF VESSEL

Table 9.1A-1

Summary of the Criticality Safety Analysis for the MZTR Storage Configuration

Design Basis Burnups at 5.0 ± 0.05 wt% ^{235}U initial enrichment	0 in Region 1 50 in Region 2 40.75 in Region 3
Temperature for Analysis	20°C
Uncertainties	
Manufacturing tolerances (Table 4.5.1)	± 0.0059
Water-gap (horizontal)	± 0.0014
Water-gap (vertical)	± 0.0003
Burnup (Region 2)	± 0.0056
Burnup (Region 3)	± 0.0001
Eccentricity in position	negative
KENO5a statistics (95%/95%)	± 0.0003
Bias statistics (95%/95%)	± 0.0012
Statistical combination of uncertainties*	± 0.0084

Region 1 Fuel Description	5.0 wt% ^{235}U with 16 IFBA rods	4.6 wt% ^{235}U with no IFBA rods
Reference k_{eff} (KENO5a)	0.9266	0.9294
Total Uncertainty (above)	0.0084	0.0084
Calculational Bias (see Appendix A)	0.0030	0.0030
Axial Burnup Effect	negative	negative
Temperature Correction to 4°C (39°F)	0.0020	0.0020
Maximum k_{eff}	**0.9400**	**0.9428**
Limiting k_{eff}	**0.9500**	**0.9500**

* Square root of the sum of the squares.

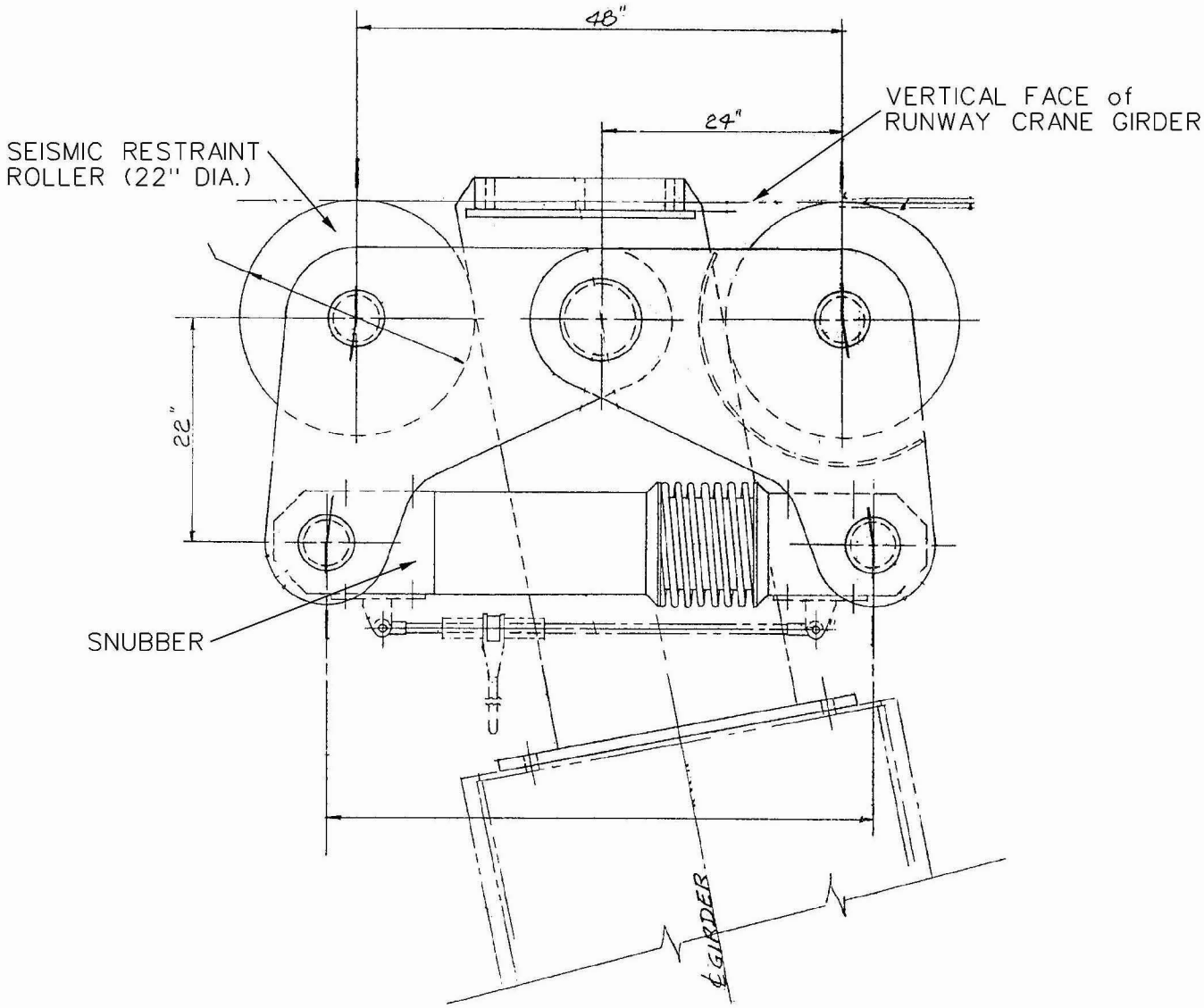

REV. 23

WOLF CREEK
UPDATED SAFETY ANALYSIS REPORT

Figure 9.1-24

PLAN VIEW DETAILS OF
SEISMIC RESTRAINT ASSEMBLY

Ref. 10466-M-063-00070

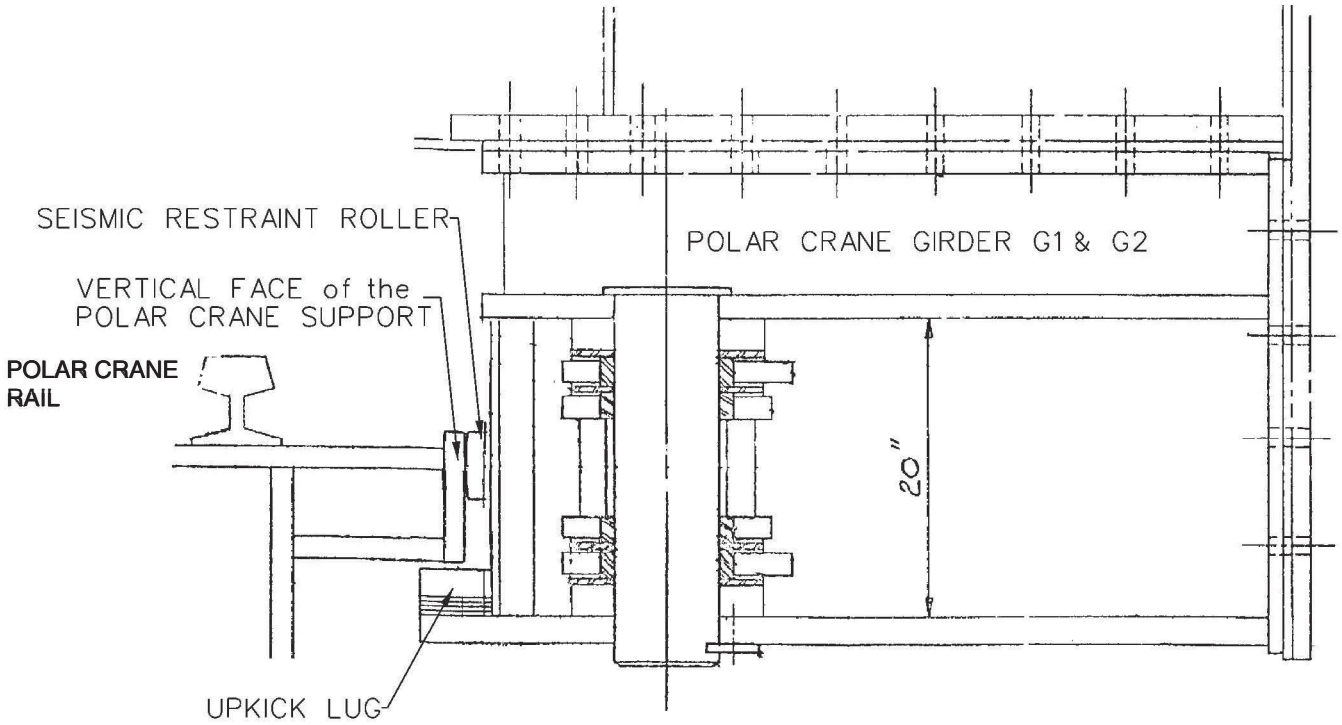

REV. 23

WOLF CREEK
UPDATED SAFETY ANALYSIS REPORT

Figure 9.1-25

DETAILS of SNUBBER
EARTHQUAKE RESTRAINT ASSEMBLY

Ref. 10466-M-063-00070

Polar Crane Parked Position

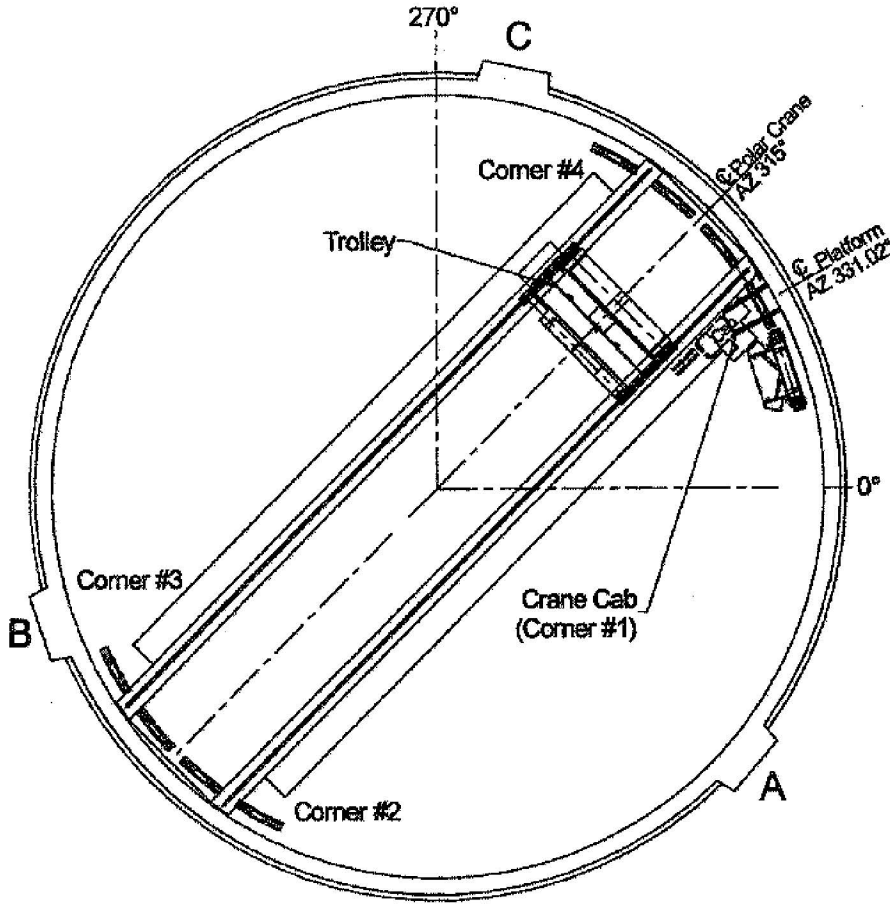

REV. 23

WOLF CREEK
UPDATED SAFETY ANALYSIS REPORT

Figure 9.1-26

POLAR CRANE in the
"PARKED POSITION" at AZ. 315°
during PLANT OPERATION

APPENDIX 9.1A

FUEL STORAGE RACK ANALYSIS

9.1A.1 THE HIGH DENSITY RACK (HDR) DESIGN CONCEPT

9.1A.1.1 Introduction

Historically, spent fuel rack designs have been based on conservative assumptions that could easily be accommodated since it was not planned to store large numbers of high exposure spent fuel assemblies on-site. Previously it was anticipated that only small amounts of high exposure fuel assemblies (1/4 to 1/2 of a full core load) would normally be stored in the spent fuel pool at any one time. Additionally it was anticipated that occasionally (e.g., for inservice inspection of the reactor vessel internals) the entire core would be unloaded and temporarily stored in the initial spent fuel pool. Therefore, the spent fuel storage rack design was based on the conservative assumption that all fuel rack storage positions would be occupied by fresh unirradiated fuel assemblies of the highest initial enrichment that was foreseen as being usable in that facility.

The penalty in achievable fuel storage density associated with this conservative design assumption was relatively small under the circumstances anticipated and easily accommodated by a conservative fuel rack design. The potential penalty associated with this conservative design basis is no longer small when long-term on-site storage of spent fuel is a necessity.

There is no situation where more than one full core load of fresh unirradiated fuel assemblies is to be stored in the fuel storage pool. Therefore, it is unnecessary and wasteful to base the entire fuel storage rack design on the assumption of fresh unirradiated fuel of the highest initial enrichment.

In the previous maximum density rack (MDR) design concept utilized by Wolf Creek, the spent fuel pool was divided into two separate and distinct regions which, for the purpose of criticality considerations may be considered as separate pools. Suitability of this design assumption regarding pool separability was assured through appropriate design restrictions at the boundaries between Region 1 and Region 2. The smaller region, Region 1, of the pool was designed on the basis of accepted conservative criteria which allowed for the safe storage of a number of fresh unirradiated fuel assemblies (including a full core loading if that should prove necessary). The larger region of the pool, Region 2, was designed to store irradiated fuel assemblies. The change in criteria was the recognition of actual fuel and fission product inventory, accompanied by a system for checking fuel prior to moving any fuel assembly from Region 1 to Region 2.

In the HDR design concept, currently utilized by Wolf Creek, the rack modules for the fuel storage pool are designed for storage of both new fuel and spent fuel. Spent fuel storage is designated into Regions based upon initial enrichment and accumulated burnup. Region 1 is designed to accommodate new fuel with a maximum nominal enrichment of 5.0 weight percent of U-235, with a minimum of 16 IFBA or 4.6 weight percent U-235, no IFBA. Region 2 and Region 3 are designed to accommodate fuel of various initial enrichments which have accumulated minimum burnups within an acceptable domain as detailed in Section 3.7 of the Technical Specifications.

9.1A.1.2 Design Bases

The high density fuel storage racks are designed to assure that the effective neutron multiplication factor (k_{eff}) in the fuel storage pool is equal to or less than 0.95 with the racks fully loaded with fuel of the highest anticipated reactivity, and flooded with unborated water at the temperature within the operating range corresponding to the highest reactivity. The fuel storage racks are designed to accommodate any and all of the following Westinghouse fuel assembly types: 17x17 OFA, 17x17 Standard, and 17x17 Vantage 5H (V5H), with a maximum nominal initial enrichment of 5.0 wt% ^{235}U and a minimum of 16 Integral Fuel Burnable Absorber (IFBA) rods. The OFA designation is used generically throughout this discussion and includes V-5 and V+ fuel. Additional restrictions are specified to allow the storage of these fuel assembly types without IFBA rods. USAR Section 9.1A.6 lists the applicable codes, standards, and regulations or pertinent sections thereof relied on for the criticality safety analysis.

The maximum calculated reactivity includes a margin for uncertainty in reactivity calculations including mechanical tolerances. All uncertainties are statistically combined, such that the final k_{eff} will be equal to or less than 0.95 with a 95% probability at a 95% confidence level. Enrichments less than 5.0 wt% ^{235}U are also evaluated, and soluble boron concentrations necessary to protect against postulated accidents are determined. USNRC guidelines and the applicable ANSI standards specify that the maximum effective multiplication factor, k_{eff}, including bias, uncertainties, and calculational statistics, shall be less than or equal to 0.95, with 95% probability at the 95% confidence level. To assure that reactivity in the fuel storage pool is always less than the calculated maximum reactivity, the following conservative assumptions were made in performing the criticality safety analysis:

Moderator is unborated water at a temperature that results in the highest reactivity (4°C, corresponding to the maximum possible moderator density).

No soluble poison or control rods are assumed to be present for normal operations, although the additional margin due to the presence of soluble boron is identified.

The effective multiplication factor of an infinite radial array of fuel assemblies was used except for the assessment of peripheral effects and certain abnormal/accident conditions where neutron leakage is inherent.

Neutron absorption in minor structural members is conservatively neglected, i.e., spacer grids are replaced by water.

Depletion calculations assume conservative operating conditions; highest fuel and moderator temperature and an allowance for the soluble boron concentrations during incore operation.

The assemblies with IFBA rods are assumed to contain the minimum possible number of IFBA rods (i.e., 16), in a conservative loading pattern, with a conservative length of 120 inches. Further, the IFBA loading used in the analyses is reduced by an uncertainty of 5%.

9.1A.1.3 Design Description

Because the fuel storage racks are designed to accommodate any and all of the following Westinghouse fuel assembly types: 17x17 OFA, 17x17 Standard, and 17x17 Vantage 5H (V5H), with a maximum initial enrichment of 5.0 wt% ^{235}U, the most reactive assembly type was identified via independent criticality calculations. To assure the acceptability of the racks for storage of any and all of these assembly types, the most reactive assembly is used in the criticality analyses. At zero burnup, the 17x 17 OFA assembly has the greatest reactivity in the storage racks, and is therefore used as the design basis fuel assembly.

The Mixed-Zone Three-Region (MZTR) configuration uses fuel assemblies with high discharge burnup as barrier fuel to isolate fresh fuel assemblies in order to achieve an acceptable k_{eff} in the fuel storage pool. Three separate storage regions are provided, with independent criteria defining the highest potential reactivity in each of the three regions:

- Region 1 is designed to accommodate new un-irradiated (fresh) fuel with a maximum nominal enrichment of 5.0 wt% ^{235}U and a minimum of 16 IFBA rods, or fuel of equivalent reactivity (e.g., 4.6 wt% ^{235}U maximum enrichment without IFBA rods).

- Region 2 is designed to accommodate fuel with a maximum nominal initial enrichment of 5.0 wt% ^{235}U and high (≥ 50 MWd/kgU) discharge fuel burnup, or fuel of initial enrichment and burnup combinations yielding an equivalent reactivity. Region 2 locations are used to isolate Region 1 fuel assemblies from other Region 1 and Region 3 fuel assemblies.

- Region 3 is designed to accommodate fuel with a maximum nominal initial enrichment of 5.0 wt% ^{235}U and typical (40.75 ≤ burnup ≤ 50 MWd/kgU) discharge fuel burnup, but can accommodate any spent fuel with discharge fuel burnup greater than or equal to 40.75 MWd/kgU. Additionally, fuel of initial enrichment and burnup combinations yielding an equivalent reactivity are acceptable for storage in Region 3.

The water in the fuel storage pool normally contains soluble boron. The presence of this soluble boron results in a large sub-criticality margin under actual operating conditions. However, NRC guidelines specify that the criticality limit, $k_{eff} \leq 0.95$ for normal storage, remain valid under accident conditions that also assume the loss of all soluble boron in the fuel storage pool. Under the double contingency principle given in ANSI N-16.1-1975 (Reference 6) and in the April 1978 NRC letter (Reference 3), credit for soluble boron under abnormal or accident conditions, however, is allowed, because only a single independent accident need be considered at one time. The consequences of abnormal and accident conditions are evaluated for the fuel storage pool. "Abnormal" refers to conditions which may reasonably be expected to occur during the lifetime of the plant, and "accident" refers to conditions which are not expected to occur, but nevertheless must be protected against.

9.1A.2 CRITICALITY ANALYSES FOR THE FUEL STORAGE POOL

9.1A.2.1 Description of Fuel Storage Pool Conditions

9.1A.2.1.1 Normal Operating Conditions

In the MZTR configuration, the fresh fuel cells (Region 1) are located alternately along the periphery of the fuel storage pool (where neutron leakage reduces reactivity) or along the boundary between two storage modules (where the water gap provides a flux-trap which reduces reactivity). High burnup fuel in Region 2 affords a low-reactivity barrier between fresh fuel assemblies and Region 3 fuel of intermediate burnup.

Numerous configurations of the various assemblies within the fuel storage pool are possible. The criteria for determining an acceptable loading arrangement in the MZTR configuration for fuel of different burnups are as follows:

- Region 1 cells are only located along the outside periphery of the storage modules and must be separated by one or more Region 2 (burnup > or = 50 MWd/kgU for 5.0 wt% ^{235}U, or equivalent burnup/enrichment combinations) cells.

- Region 1 cells may be located directly across from one another when separated by a water gap. Along the interface between storage modules the water gap is 1.5" +/1/8" (excluding sheathing).

- The outer rows of alternating Region 1 and Region 2 cells must be further separated (isolated) from the internal Region 3 cells by one or more Region 2 cells.

- Fresh fuel assemblies without IFBA rods and a maximum enrichment of 5.0 wt% ^{235}U may be stored in any periphery Region 1 cell location that is next to a concrete wall.

Prior to approaching the reactor end-of-life, not all storage cells are needed for spent fuel. Therefore, an alternative (interim) configuration may be used in which the cells of selected modules may be loaded in a checkerboard pattern of fresh fuel (or spent fuel of any burnup) with empty cells. A checkerboard configuration is intended primarily to develop a simple configuration of Region 1 cells and facilitate storage of fresh (unburned) and low burnup fuel.

The principles involved in the design and specification of an acceptable loading arrangement in the interim checkerboard configuration are as follows:

- Fuel with maximum nominal enrichment of 5 wt% ^{235}U and a minimum of 16 IFBA rods, or fuel of equivalent reactivity (e.g., 4.6 wt% ^{235}U maximum enrichment without IFBA rods), is placed in an alternating checkerboard style pattern with empty cells (i.e., fuel assemblies are surrounded on all four sides by empty cells).

- Fuel assemblies may not be located directly across from one another, even when separated by a water gap.

- So long as the checkerboard pattern is maintained in a linear array greater than or equal to 2x2, the arrangement may be used anywhere in the pool. More than one checkerboard pattern may be used, as long as the limitations discussed herein are adhered to.

- A checkerboard region may be bounded by either a water gap, empty rack cells, Region 2 fuel assemblies, or Region 3 fuel assemblies.

- MZTR and checkerboard storage shall not be developed within the same rack.

Non-fueled items such as trash baskets and dummy fuel assemblies may be stored anywhere in the fuel storage pool. Damaged fuel storage baskets must be stored in any cell that allows fuel assembly storage.

Figure 9.1A-3 defines the acceptable burnup domains for spent fuel and illustrates the limiting burnup for fuel of various initial enrichments for both Region 2 (upper curve) and Region 3 (lower curve). Both curves assume that the fresh fuel (Region 1) has a maximum nominal enrichment of 5.0 wt% ^{235}U. Criticality analyses demonstrate that the most reactive configuration occurs along the boundary between modules where the water gap affords a neutron flux trap. Along the periphery of the modules facing the concrete wall of the pool, the reactivity is substantially lower due to neutron leakage. The bounding criticality analyses are summarized in Table 9.1A-1 for the design basis MZTR storage configuration and in Table 9.1A-2 for the interim checkerboard storage configuration. In both cases, the single accident condition of the loss of all soluble boron is assumed. The calculated maximum reactivity of 0.943 (corresponding to the design basis MZTR storage configuration) is within the regulatory limit of 0.95. This maximum reactivity includes calculational uncertainties and uncertainties in reactivity due to manufacturing tolerances (95% probability at the 95% confidence level), an allowance for uncertainty in depletion calculations, and the evaluated effect of the axial distribution in burnup.

The value of k_{eff} in Table 9.1A-1 assumes no soluble boron to be present. For normal operations, a minimum soluble boron concentration of 2165 ppm is maintained in the Wolf Creek fuel storage pool. This concentration of soluble boron provides a large safety margin for sub-criticality.

As cooling time increases in long-term storage, decay of ^{241}Pu (and growth of ^{241}Am) results in a continuous decrease in reactivity, which provides an increasing sub-criticality margin with time. No credit is taken for this decrease in reactivity other than to indicate conservatism in the calculations.

The burnup criteria identified in Figure 9.1A-3, for acceptable storage in Region 2 and Region 3, are used in appropriate administrative procedures to assure verified burnup as specified in the proposed Regulatory Guide 1.13, Revision 2 (Reference 14). Soluble poison is present in the pool water during fuel handling operations, and this serves as a further margin of safety and as a precaution in the event of fuel misplacement during fuel handling operations.

9.1A.2.1.2 Abnormal and Accident Conditions

Although credit for the soluble poison normally present in the fuel storage pool water is permitted under abnormal or accident conditions, most abnormal or accident conditions will not result in exceeding the limiting reactivity (k_{eff} of 0.95) even in the absence of soluble poison. The effects on reactivity of credible abnormal and accident conditions are discussed in Section 9.1A.2.2.5 and summarized in Table 9.1A-3. Of these abnormal or accident conditions, only two have the potential for a more than negligible positive reactivity effect. These include: (1) the inadvertent misplacement of a fresh fuel assembly and (2) the mis-location of a fresh fuel assembly into a position external and adjacent to a storage rack.

The inadvertent misplacement of a fresh fuel assembly has the potential for exceeding the limiting reactivity, should there be a concurrent and independent accident condition resulting in the loss of all soluble poison. Assuring the presence of soluble poison during fuel handling operations will preclude the possibility of the simultaneous occurrence of the two independent accident conditions. The largest reactivity increase would occur if a fresh fuel assembly of 5.0 wt% ^{235}U enrichment were to be inadvertently loaded into an empty cell in the checkerboard configuration with the remainder of the rack fully loaded with fuel of the highest permissible reactivity. For the MZTR configuration, when a fresh fuel assembly of 5.0 wt% ^{235}U enrichment is inadvertently loaded into a Region 2 location (with the remainder of the rack fully loaded with fuel of the highest permissible reactivity), the overall reactivity is slightly less reactive. However, it still exceeds the limiting value without the presence of soluble boron. Under these accident conditions, credit for the presence of soluble poison is permitted by the NRC guidelines. Calculations indicate that 500 ppm soluble boron would be adequate to reduce the k_{eff} to below the reference k_{eff} value (Table 9.1A-1). This soluble boron concentration bounds all other accidents and is well below the 2165 ppm soluble boron concentration that is maintained in the Wolf Creek fuel storage pool.

It is possible for a fuel assembly to be dropped or mis-located in the fuel storage pool such that it may be situated outside and adjacent to a storage rack. The calculated k_{eff} value for the worst case situation exceeds the limit on reactivity in the absence of soluble boron. Because this case is less severe than the misplaced fresh fuel assembly accident, it requires less than 500 ppm soluble boron to reduce the k_{eff} to the reference value (Table 9.1A-1).

Multiple misplaced fuel assemblies were also considered. This accident is bounded by assuming every cell is filled with 5.0% wt% ^{235}U, 16 IFBA fuel, and requires 2165 ppm boron to control k_{eff}.

9.1A.2.2 Analytical Methodology

To assure the acceptability of the racks for storage of all fuel assembly design types, the most reactive assembly type was identified by independent criticality calculations. This most reactive assembly is the reference assembly used in the criticality calculations. In addition, a nominal fuel storage cell is also used in the criticality calculations. This nominal fuel storage cell represents the fuel pool storage cells.

9.1A.2.2.1 Reference Fuel Assembly

The fuel storage pool racks are designed to accommodate any and all of the following Westinghouse fuel assembly types: 17x17 OFA, 17x17 Standard, and 17x17 Vantage 5H (V5H), with a maximum nominal initial enrichment of 5.0 wt% ^{235}U. Additional restrictions are specified to allow the storage of any of the aforementioned fuel assembly types without IFBA rods. Independent criticality calculations were performed to identify the most reactive assembly type. The results of these calculations show that at zero burnup the 17xl 7 OFA assembly has the greatest reactivity in the storage racks, and thus, is the design basis fuel assembly. The Westinghouse OFA is a 17 x 17 array of fuel rods with 25 rods replaced by 24 control rod guide tubes and l instrument thimble. Table 9.1A-4 summarizes the fuel assembly design specifications.

At burnups beyond approximately 25 MWd/kgU, the 17x17 Standard and 17x17 Vantage 5H become the most reactive assembly types. These two assembly types are essentially identical. Therefore, for the determination of the equivalent enrichments associated with Regions 2 and 3, the reactivity of the V5H assembly was related to an initial enrichment for the 17x17 OFA assembly.

The fresh fuel assemblies were assumed to contain the minimum possible number of IFBA rods (i.e., 16) in a conservative loading pattern with a conservative length of 120 inches. The IFBA rods are characterized by a thin ZrB_2 coating on the outside of the fuel pellets. Because B-10 in ZrB_2 is a strong neutron absorber, it reduces the assembly reactivity, and thus, enables the storage of fuel with high initial enrichment. The IFBA loading was assumed to be 2.25 mg B-10/inch with an uncertainty of 5%. The IFBA loading was assumed to be reduced by the 5% uncertainty in this analysis. With 16 IFBA rods present, the reactivity of the assembly does not exhibit a peak with burnup, and thus the calculated reactivity of the fresh assembly is bounding. The IFBA rods are modeled in the fresh fuel assemblies only; no credit is taken for residual IFBA in the Region 2 and Region 3 fuel assemblies.

9.1A.2.2.2 High Density Reference Fuel Storage Cell

A nominal fuel storage pool cell was used for the criticality calculations for the fuel storage pool cells. Stainless steel boxes are arranged in an alternating pattern such that the connection of the box corners form storage cells between those of the stainless steel boxes. The walls of the stainless steel boxes contain a Boral panel (attached by a stainless steel sheathing) centered on each side. Peripheral cells use stainless steel sheathing on the outside wall to attach the Boral panel. The fuel assemblies are normally located in the center of each storage cell on a nominal lattice spacing of 8.99 inches.

9.1A.2.2.3 Analytical Technique

The principal method for criticality analysis of the high density storage racks is the three-dimensional Monte Carlo KENO5a (Reference l) code, as developed by the Oak Ridge National Laboratory as part of the SCALE 4.3 package. Independent verification calculations were performed with the MCNP (version 4a) code (Reference 2), a continuous energy three-dimensional Monte Carlo code developed at the Los Alamos National Laboratory. The KENO5a calculations used the 238-group SCALE cross-section library and NITAWL (Reference3) for ^{238}U resonance shielding effects (Nordheim integral treatment). Benchmark calculations, presented in section 9.1A.2.2.6, indicate a bias of 0.0030 with an uncertainty of ±0.0012 for KENO5a and 0.0009 ± 0.0011 for MCNP4a, both evaluated at the 95% probability, 95% confidence level (Reference 4).

Fuel depletion analyses during core operation were performed with CASMO-3, a two-dimensional multigroup transport theory code based on capture probabilities (References 5-7). Restarting the CASMO-3 calculations in the storage rack geometry at 4°C yields the two-dimensional infinite multiplication factor (k_∞) for the storage rack. Parallel calculations with CASMO-3 for the storage rack at various enrichments enable a reactivity equivalent enrichment (fresh fuel) to be determined that provides the same reactivity in the rack as the depleted fuel. CASMO-3 was also used to determine the small reactivity uncertainties (differential calculations) of manufacturing tolerances.

In the geometric models used for the calculations, each fuel rod and its cladding were described explicitly and reflecting boundary conditions were used in the radial direction which has the effect of creating an infinite radial array of storage cells. KENO5a and MCNP4a Monte Carlo calculations inherently include a statistical uncertainty due to the random nature of neutron tracking. To minimize the statistical uncertainty of the KENO5a-calculated reactivity and to assure convergence, a minimum of 5 million neutron histories in 1,000 generations of 5,000 neutrons per generation were accumulated in each single assembly infinite array calculation. A minimum of 20 million neutron histories in 2,000 generations of 10,000 neutrons per generation were accumulated in each multiple assembly (MZTR and checkerboard) configuration.

Figure 9.1A-1 represents the reference MZTR geometric model used in the KENO5a calculations. This figure is intended to show the arrangement of fuel assemblies modeled, and not the specific details of the model. With reflecting boundary conditions, this model effectively describes the entire pool in the MZTR configuration, including the water gap between storage modules. In the axial direction, the full length 144-inch fuel assembly was described assuming 30-cm water reflector, top and bottom. In addition, the axial variation in burnup was explicitly modeled and resulted in a slightly lower reactivity than the reference design calculation (which assumes uniform axial burnup). Figure 9.1A-2 represents the reference checkerboard geometric model used in the KENO5a calculations. With reflecting boundary conditions, this model effectively describes the entire pool in the checkerboard configuration, including the water gap between storage modules. These large models were also used to investigate uncertainties in the configurations and the consequences of potential accident conditions, including a misplaced fresh fuel assembly.

Because NITAWL-KENO5a does not have burnup capability, burned fuel was represented by fuel of equivalent enrichment as determined by CASMO-3 calculations in the storage cell (i.e. an enrichment which yields the same reactivity in the storage cell as the burned fuel). In tracking long-term (30-year) reactivity effects of spent fuel, previous CASMO-3 calculations have demonstrated a continuous reduction in reactivity with time (after Xe decay) (Reference 8) due primarily to ^{241}Pu decay and ^{241}Am growth.

9.1A.2.2.3.1 Fuel Burnup Calculations and Uncertainties

CASMO-3 was used for burnup calculations in the hot operating condition. CASMO-3 has been extensively benchmarked (References 7 and 9) against cold, clean, critical experiments (including plutonium-bearing fuel), Monte Carlo calculations, reactor operations, and heavy element concentrations in irradiated fuel. In addition to burnup calculations, CASMO-3 was used for evaluating the small reactivity increments (by differential calculations) associated with manufacturing tolerances and for determining temperature effects.

In the CASMO-3 geometric model, each fuel rod and its cladding were described explicitly and reflective boundary conditions were used at the centerline of the Boral and steel plates between storage cells. These boundary conditions have the effect of creating an infinite array of storage cells in the X-Y plane and provide a conservative estimate of the uncertainties in reactivity attributed to manufacturing tolerances.

Conservative assumptions of moderator and fuel temperatures and the average operating soluble boron concentrations were used to assure the highest plutonium production and hence conservatively high values of reactivity during burnup. Since critical experiment data with spent fuel is not available for determining the uncertainty in depletion calculations, an allowance for uncertainty in reactivity was assigned based upon the assumption of 5% uncertainty in burnup. At the design basis burnups of 40.75 and 50 MWd/kgU, the uncertainties in burnup are ± 2.04 and ± 2.5 MWd/kgU respectively. These uncertainties correspond to approximately 0.013 Δk and 0.016 Δk in the fuel infinite multiplication factor. (The majority of the uncertainty in depletion calculations derives from uncertainties in fuel and moderator temperatures and the effect of reactivity control methods (e.g., soluble boron). For depletion calculations, bounding values of these operating parameters were assumed to assure conservative results in the analyses).

To evaluate the reactivity consequences of the uncertainties in burnup, independent MZTR calculations were made with fuel of 38.5 and 47.5 MWd/kgU burnup in Regions 2 and 3, and the incremental change from the reference burnups assumed to represent the net uncertainties in reactivity attributable to uncertainty in depletion calculations. These calculations resulted in an incremental reactivity uncertainty in k_{eff} of ±0.0056 Δk for Region 2 and ±0.0001 Δk for Region 3. These effects would be lower for lower initial enrichments and burnups. The fresh unburned fuel in Region 1 strongly dominates the reactivity which tends to minimize the reactivity consequences of uncertainties in depletion calculations. The allowance for uncertainty in the burnup calculations is believed to be conservative, particularly in view of the substantial reactivity decrease with time as the spent fuel ages.

9.1A.2.2.3.2 Effect of Axial Burnup Distribution

Initially, fuel loaded into the reactor will burn with a slightly skewed cosine power distribution. As burnup progresses, the burnup distribution will tend to flatten, becoming more highly burned in the central regions than in the upper and lower regions. At high burnup, the more reactive fuel near the ends of the fuel assembly (less than average burnup) occurs in regions of high neutron leakage. Consequently, it is expected that over most of the burnup history, fuel assemblies with distributed burnups will exhibit a slightly lower reactivity than that calculated for the uniform average burnup. As burnup progresses, the distribution, to some extent, tends to be self-regulating as controlled by the axial power distribution, precluding the existence of large regions of significantly reduced burnup. Among others, Turner (Reference 10) has provided generic analytic results of the axial burnup effect based upon calculated and measured axial burnup distributions. These analyses confirm the minor and generally negative reactivity effect of the axially distributed burnup.

Based on axial burnup distributions of spent fuel (axial burnup data for assemblies from the Wolf Creek plant with average burnups of 50.10 and 36.84 MWd/kgU were normalized to the Region 2 and 3 burnups, 50 and 40.75 MWd/kgU, respectively), three-dimensional KENO5a calculations were performed. In these calculations, the axial height of the Region 2 and 3 fuel was divided into 5 axial zones, each with an average enrichment equivalent to the burnup of that zone. The selection of the five axial zones was based on the shapes of the axial burnup distributions. The resulting k_{eff} was 0.007 Δk less than the reference k_{eff} (which assumes uniform axial burnup).

Fuel of lower initial enrichments (and lower burnup) would have a more negative reactivity effect as a result of the axial variation in burnup. These estimates are believed to be conservative since smaller axial increments in the calculations have been shown to result in lower incremental reactivities (Reference 10).

9.1A.2.2.4 Criticality Analyses Uncertainties and Tolerances

A number of tolerances result in reactivity uncertainties which must be considered in the criticality analyses.

9.1A.2.2.4.1 Nominal Design

For the nominal MZTR storage configuration, the bounding criticality analyses are summarized in Table 9.1A-1. The NITAWL-KENO5a calculated k_{eff} value is combined with all the known uncertainties and corrected for bias and temperature (see Section 9.1A.2.2.5.1 for temperature correction), to determine the maximum k_{eff} value with a 95% probability at the 95% confidence level (Reference 4).

For the interim loading pattern of fresh fuel checkerboarded with empty cells, the bounding criticality analyses are summarized in Table 9.1A-2. An alternate calculation with a 2X2 checkerboard pattern bordered on all sides with Region 3 fuel assemblies resulted in a maximum k_{eff} of 0.903 with a 95% probability at the 95% confidence level. Therefore, the checkerboard loading pattern may be used anywhere in any module provided that the checkerboard pattern is a linear array greater than or equal to 2X2 and is bordered by any of the following: the water gap between rack modules, the water gap between a rack module and the pool wall, empty rack cells, Region 2 fuel assemblies, and/or Region 3 fuel assemblies.

9.1A.2.2.4.2 Uncertainties Due to Manufacturing Tolerances

The uncertainties due to manufacturing tolerances are summarized in Table 9.1A-5 and discussed below.

9.1A.2.2.4.2.1 Boron Loading Tolerances

The Boral absorber panels are manufactured with a tolerance limit in B-10 content which assures that at any point, the minimum B-10 areal density will not be less than 0.030 g/cm^2. Differential CASMO-3 calculations for an infinite array of fresh assemblies with the minimum tolerance B-10 loading results in an incremental reactivity uncertainty of ±0.0044 Δk. This value was conservatively assumed to be the B-10 loading uncertainty.

9.1A.2.2.4.2.2 Boral Width Tolerance

The differential CASMO-3 calculated reactivity uncertainty is ±0.0010 Δk, when the reference storage cell design has the minimum tolerance for Boral panel thickness.

9.1A.2.2.4.2.3 Tolerances in Cell Lattice Spacing

The differential CASMO-3 calculations determine an uncertainty of ±0.0016 Δk in the calculated reactivity when the minimum manufacturing tolerance on the inner box dimension is used. The minimum manufacturing tolerance on the inner box dimension directly affects the storage cell lattice spacing between fuel assemblies.

9.1A.2.2.4.2.4 Stainless Steel Thickness Tolerances

The nominal stainless steel thickness for the stainless steel box also has an impact on the calculation of reactivity. The reactivity uncertainty of the expected stainless steel thickness tolerances was calculated with CASMO-3 and was determined to be ±0.0002 Δk.

9.1A.2.2.4.2.5 Fuel Enrichment and Density Tolerances

The design maximum enrichment is 5.0 ±0.05 wt% ^{235}U. Separate CASMO-3 burnup calculations were made for fuel of the maximum enrichment (5.05 wt% ^{235}U) and for the maximum UO_2 density (10.61 g/cm^3). Reactivities in the storage cell were then calculated using the restart capability in CASMO-3. For fresh fuel, the incremental reactivity uncertainties were ±0.0023 Δk for the enrichment tolerance and ±0.0026 Δk for the tolerance in fuel density.

9.1A.2.2.4.3 Water-Gap Spacing Between Modules

The water-gap between modules, which is 1.5 inches (excluding sheathing), constitutes a neutron flux-trap for the storage cells of facing racks. KENO5a calculations were made with the reference MZTR model to determine the uncertainty associated with a water-gap tolerance. Due to the asymmetries in the MZTR pool configuration, the effect of the horizontal and vertical water gaps (see Figure 9.1A-1) were calculated separately. From these calculations, it was determined that the incremental reactivity consequence (uncertainty) for a water-gap tolerance of ±1/8 inches is ± 0.0014 Δk (horizontal gap) and ±0.0003 Δk (vertical gap). The racks are constructed with the base plate extending beyond the edge of the cells which assures that the minimum spacing between storage modules is maintained under all credible conditions.

9.1A.2.2.4.4 Eccentric Fuel Positioning

The fuel assembly is assumed to be centered in the storage rack cell. Calculations were made using KEN05a assuming the fuel assemblies were located in the corners of the storage rack cells (four-assembly clusters at the closest possible approach). These calculations indicated that the reactivity effect is small and negative. Therefore, the reference case in which the fuel assemblies are centered is controlling and no uncertainty for eccentricity is necessary.

9.1A.2.2.5 Abnormal and Accident Conditions

The reactivity effects of abnormal and accident conditions are summarized in Table 9.1A-3.

9.1A.2.2.5.1 Temperature and Water Density Effects

The moderator temperature coefficient of reactivity is negative; a moderator temperature of 4°C (39°F) was assumed for the reference calculations, which assures that the true reactivity will always be lower over the expected range of water temperatures. Temperature effects on reactivity have been calculated (CASMO-3) and the results are shown in Table 9.1A-6. In addition, the introduction of voids in the water internal to the storage cell (to simulate boiling) decreased reactivity, as shown in Table 9.1A-6.

With soluble boron present, the temperature coefficients of reactivity would differ from those listed in Table 9.1A-6. However, the reactivities would also be substantially lower at all temperatures with soluble boron present. The data in Table 9.1A-6 is pertinent to the higher-reactivity unborated case.

For the dominant Region 1 fuel, the value of Δk between calculations at 20°C and 4°C is 0.0020 Δk. Since the KENO5a code cannot properly handle temperature dependence, all KENO5a calculations were performed at 20°C and a temperature correction factor (+0.0020 Δk) was applied to the results.

9.1A.2.2.5.2 Lateral Rack Movement

The possibility of reductions in the rack-to-rack gaps and the resulting criticality consequences have also been reviewed. Criticality evaluations are sensitive to these gap dimensions, since the inter-rack gaps provide a flux trap which reduces the reactivity. Rack-to-rack gap reductions are a concern subsequent to dynamic events which are severe enough to displace the racks laterally or produce fuel-to-rack cell wall impacts of sufficient magnitude to exceed cell wall material yield strength (i.e., produce plastic deformation).

The criticality analyses are based on the minimum nominal rack to rack gap of 1.5 inches (excluding sheathing). Thus, the outer sheathing wall-to-outer sheathing wall gap is 1.35 inches. This gap dimension is maintained during initial installation and subsequent to dynamic loadings, and is ensured by fabrication of the 3/4 inch base plate extensions on each rack.

Momentary reductions in these gaps may be caused by the swaying of the tops of the racks during seismic events, during which the tops of the cells may actually come into contact. Even under these circumstances, the bottoms of the cells in adjacent racks are still maintained at the 1.5 inch dimension due to the base-plate extensions. Transient reduction in the inter-rack gap dimension below 1.5 inches is acceptable because of the presence of soluble boron which may be credited during seismic events. Additionally, a time-history plot of the inter-rack gaps (see Figure 9.1A-25 through Figure 9.1A-27) indicates that the gaps are reduced for a very short period of time before being restored to the minimum of 1.5 inches.

9.1A.2.2.5.3 Rack-Gap Changes

Another consideration which could potentially reduce the inter-rack gap is the impact of the fuel assembly on the inside of the cell wall during seismic events. If these impacts are of sufficient magnitude to allow plastic deformation of the cell wall membrane, then permanent displacement of the cell would take place, thus reducing the inter-rack gap. The largest fuel assembly-to-cell wall impact load is determined to be 840 pounds (see USAR Section 9.1A.4.3.4.6). Evaluations on the local cell wall integrity (see USAR Section 9.1A.4.3.5.3) have determined that the load required to produce permanent deformation (i.e., exceed the cell membrane material yield strength) exceeds the calculated load of 840 pounds by a factor of approximately 4. Therefore, there are no criticality concerns related to the reductions in inter-rack gaps from plastic deformation of the cell wall.

9.1A.2.2.5.4 Abnormal Location of a Fuel Assembly

In the MZTR configuration, the abnormal location of a fresh unirradiated fuel assembly of 5.0 wt% ^{235}U enrichment could, in the absence of soluble poison, result in exceeding the design reactivity limitation (k_{eff} of 0.95). This would occur if a fresh fuel assembly of the highest permissible enrichment were to be inadvertently loaded into either a Region 2 or Region 3 storage cell. Calculations (KENO5a) confirmed that the highest reactivity, including uncertainties, for the worst case postulated accident condition (fresh fuel assembly in Region 2) would exceed the limit on reactivity in the absence of soluble boron. Soluble boron in the fuel pool water, for which credit is permitted under these accident conditions, would assure that the reactivity is maintained substantially less than the design limitation. Calculations indicate that a soluble poison concentration of 440 ppm boron would be required to limit the maximum reactivity to the reference k_{eff} value (Table 9.1A-1), including all uncertainties and biases, under this maximum postulated accident condition.

In the checkerboard configuration, the worst case postulated accident condition (fresh fuel assembly inadvertently loaded into an empty cell) would also exceed the limit on reactivity in the absence of soluble boron. Soluble boron in the fuel storage pool water, for which credit is permitted under these accident conditions, would assure that the reactivity is maintained substantially less than the design limitation. Calculations indicate that a soluble poison concentration of 500 ppm boron would be required to limit the maximum reactivity to the reference k_{eff} value (Table 9.1A-1), including all uncertainties and biases, under this maximum postulated accident condition.

The accident scenario of all rack cells fully loaded with fresh fuel assemblies, each with a minimum of 16 IFBA (1.5x) rods, determined the concentration of soluble boron required to maintain the k_{eff} in the spent fuel pool less than or equal to the regulatory limit ($k_{eff} \leq 0.95$). The most reactive assembly type at zero burnup was identified to be the Westinghouse OFA assembly and the design basis fuel assembly was defined to be the Westinghouse OFA assembly with a maximum nominal enrichment of 5.0% wt% ^{235}U and a minimum of 16 IFBA (1.5x) rods, (in a conservative loading pattern). Consistent with the original analyses, the KENO5a computer code was used. Also, the manufacturing uncertainties as determined in the original analyses are used in this analysis. Because this analysis involves an infinite array of fresh fuel assemblies, the uncertainties associated with the rack-to-rack gap thickness and burnup are not applicable.

9.1A.2.2.5.5 Dropped Fuel Assembly

For the case in which a fuel assembly is assumed to be dropped on top of a rack, the fuel assembly will come to rest horizontally on top of the rack with a minimum separation distance from the active fuel in the rack of more than 19 inches, including the potential deformation under seismic or accident conditions. At this separation distance, the effect on reactivity is insignificant. Furthermore, the soluble boron in the pool water assures that the true reactivity is always less than the limiting value for this dropped fuel accident.

It is possible for a fuel assembly to be mis-located adjacent to a storage rack in the northwest (area near the opening to the fuel transfer canal) and southeast (area near the opening to the cask loading pool) corners of the fuel storage pool. The worst case postulated accidents are: (1) in the southeast corner of the MZTR configuration, a fresh fuel assembly could be dropped and come to rest in the corner made up by a fresh assembly to the north and a Region 2 assembly to the west and (2) in the northwest comer of the checkerboard configuration, a fresh fuel assembly could be mis-located in a corner with fresh assemblies on two sides.

The k_{eff} values for these two cases are very similar, and exceed the limit on reactivity in the absence of soluble boron. Soluble boron in the fuel pool water, for which credit is permitted under these accident conditions, would assure that the reactivity is maintained substantially less than the design limitation. These cases are less severe than the misplaced fresh fuel assembly accidents, and thus, are bounded by them.

9.1A.2.2.6 Benchmark Calculations

The methodologies for determining criticality safety have been verified by comparison with critical experiment data for configurations that impose a stringent test of the capability of the analytical methodologies. These benchmark calculations have been made on selected critical experiment, chosen, in so far as possible to bound the range of variables in fuel storage rack designs, including the Wolf Creek high density racks.

9.1A.2.2.6.1 Summary

Two independent methods of analysis were used in performing the Wolf Creek fuel storage rack criticality safety analyses. These two methods differ in cross section libraries and in the treatment of the cross sections. MCNP4a (Reference 17) is a continuous energy Monte Carlo code and KENO5a (Reference 18) uses group-dependent cross sections. For the KENO5a analyses reported here, the 238-group library was chosen, processed through the NITAWL-II (Reference 18) program to create a working library and to account for resonance self-shielding in uranium-238 (Nordheim integral treatment). The 238-group library was chosen to avoid or minimize the errors (trends) that have been reported (e.g., References 19-21) for calculations with collapsed cross section sets. Small but observable trends (errors) have been reported for calculations with the 27-group and 44-group collapsed libraries. These errors are probably due to the use of a single collapsing spectrum when the spectrum should be different for the various cases analyzed, as evidenced by the spectrum indices.

In rack designs, the three most significant parameters affecting criticality are (1) the fuel enrichment, (2) the ^{10}B loading in the neutron absorber, and (3) the lattice spacing (or water-gap thickness if a flux-trap design is used). Other parameters, within the normal range of rack and fuel designs, have a smaller effect, but are also included in the analyses.

Table 9.1A-7 summarizes results of the benchmark calculations for all cases selected and analyzed, as referenced in the table. The effect of the major variables are discussed in subsequent sections below. It is important to note that there is obviously considerable overlap in parameters since it is not possible to vary a single parameter and maintain criticality; some other parameter or parameters must be concurrently varied to maintain criticality.

One possible way of representing the data is through a spectrum index that incorporates all of the variations in parameters. KEN05a computes and prints the "energy of the average lethargy causing fission" (EALF). In MCNP4a, by utilizing the tally option with the identical 238-group energy structure as in KENO5a, the number of fissions in each group may be collected and the EALF determined (post-processing).

Figures 9.1A-7 and 9.1A-8 show the calculated k_{eff} for the benchmark critical experiments as a function of the EALF for MCNP4a and KENO5a, respectively (UO_2 fuel only). The scatter in the data (even for comparatively minor variation in critical parameters) represents experimental error in performing the critical experiments within each laboratory, as well as between the various testing laboratories. A classical example of experimental error is the corrected enrichment in the PNL experiments, first as an addendum to the initial report and, secondly, by revised values in subsequent reports for the same fuel rods. The B&W critical experiments show a larger experimental error than the PNL criticals. This would be expected since the B&W criticals encompass a greater range of critical parameters than the PNL criticals.

Linear regression analysis of the data in Figures 9.1A-7 and 9.1A-8 show that there are no trends, as evidenced by very low values of the correlation coefficient (0.13 for MCNP4a and 0.21 for KENO5a). The total bias (systematic error, or mean of the deviation from a k_{eff} of exactly 1.000) for the two methods of analysis are shown in the table below.

Calculational Bias of MCNP4a and KENO5a	
MCNP4a	0.0009±0.0011
KENO5a	0.0030±0.0012

The bias and standard error of the bias were derived directly from the calculated k_{eff} values in Table 9.1A-7 using the following equations, with the standard error multiplied by the one-sided K-factor for 95% probability at the 95% confidence level from NBS Handbook 91 (Reference 34) (for the number of cases analyzed, the K-factor is ~2.05 or slightly more than 2). These equations may be found in any standard text on statistics, for example, Reference 22 (or the MCNP4a manual) and is the same methodology used in MCNP4a and in KENO5a.

$$\bar{k} = \frac{1}{n} \sum_{i}^{n} k_i \qquad (1)$$

$$\sigma_{\bar{k}}^2 = \frac{\sum_{i=1}^{n} k_i^2 - \left(\sum_{i=1}^{n} k_1\right)^2 / n}{n(n-1)} \qquad (2)$$

$$\text{Bias} = \left(1 - \bar{k}\right) \pm K\sigma_{\bar{k}} . \qquad (3)$$

where k_i are the calculated reactivities of n critical experiments; $\sigma_{\bar{k}}$ is the unbiased estimator of the standard deviation of the mean (also called the standard error of the bias (mean)); K is the one-sided multiplier for 95% probability at the 95% confidence level (NBS Handbook 91 (Reference 34)).

Formula (3) is based on the methodology of the National Bureau of Standards (now NIST) and is used to calculate the values presented in the Table above. The first portion of the equation, ($1-\bar{k}$), is the actual bias which is added to the MCNP4a and KENO5a results. The second term, $K\sigma_{\bar{k}}$ is the uncertainty or standard error associated with the bias. The K values used were obtained from the National Bureau of Standards Handbook 91 and are for one-sided statistical tolerance limits for 95% probability at the 95% confidence level. The actual K values for the 56 critical experiments evaluated with MCNP4a and the 53 critical experiments evaluated with KENO5a are 2.04 and 2.05, respectively.

The bias values are used to evaluate the maximum k_{eff} values for the rack designs. KENO5a has a slightly larger systematic error than MCNP4a, but both result in greater precision than published data (References 19-21) would indicate for collapsed cross section sets in KENO5a (SCALE) calculations.

9.1A.2.2.6.2 Effect of Enrichment

The benchmark critical experiments include those with enrichments ranging from 2.46 w/o to 5.74 w/o and therefore span the enrichment range for rack designs. Figures 9.1A-8 show the calculated k_{eff} values (Table 9.1A-7) as a function of the fuel enrichment reported for the critical experiments. Linear regression analyses for these data confirms that there are no trends, as indicated by low values of the correlation coefficients (0.03 for MCNP4a and 0.38 for KENO5a). Thus, there are no corrections to the bias for the various enrichments.

As further confirmation of the absence of any trends with enrichment, a typical configuration was calculated with both MCNP4a and KENO5a for various enrichments. The cross-comparison of calculations with codes of comparable sophistication is suggested in Reg. Guide 3.41. Results of this comparison, shown in Table 9.1A-8 and Figure 9.1A-8, confirm no significant difference in the calculated values of k_{eff} for the two independent codes as evidenced by the 45° slope of the curve. Since it is very unlikely that two independent methods of analysis would be subject to the same error, this comparison is considered confirmation of the absence of an enrichment effect (trend) in the bias.

9.1A.2.2.6.3 Effect of ^{10}B Loading

Several laboratories have performed critical experiments with a variety of thin absorber panels similar to the Boral panels in the rack designs. Of these critical experiments, those performed by B&W are the most representative of the rack designs. PNL has also made some measurements with absorber plates, but with one exception (a flux-trap experiment), the reactivity worth of the absorbers in the PNL tests is very low and any significant errors that might exist in the treatment of strong thin absorbers could not be revealed.

Table 9.1A-9 lists the subset of experiments using thin neutron absorbers (from Table 9.1A-7) and shows the reactivity worth (k) of the absorber. The reactivity worth of the absorber panels was determined by repeating the calculation with the absorber analytically removed and calculating the incremental (Δk) change in reactivity due to the absorber.

No trends with reactivity worth of the absorber are evident, although based on the calculations shown in Table 9.1A-9, some of the B&W critical experiments seem to have unusually large experimental errors. B&W made an effort to report some of their experimental errors. Other laboratories did not evaluate their experimental errors.

To further confirm the absence of a significant trend with ^{10}B concentration in the absorber, a cross-comparison was made with MCNP4a and KENO5a (as suggested in Reg. Guide 3.41).

Results are shown in Figure 9.1A-9 and Table 9.1A-10 for a typical geometry. These data substantiate the absence of any error (trend) in either of the two codes for the conditions analyzed (data points fall on a 45° line, within an expected 95% probability limit).

9.1A.2.2.6.4 Miscellaneous and Minor Parameters

9.1A.2.2.6.4.1 Reflector Material and Spacings

PNL has performed a number of critical experiments with thick steel and lead reflectors. Analysis of these critical experiments are listed in Table 9.1A-11 (subset of data in Table 9.1A-7). There appears to be a small tendency toward over prediction of k_{eff} at the lower spacing, although there are an insufficient number of data points in each series to allow a quantitative determination of any trends. The tendency toward over prediction at close spacing means that the rack calculations may be slightly more conservative than otherwise.

9.1A.2.2.6.4.2 Fuel Pellet Diameter and Lattice Pitch

The critical experiments selected for analysis cover a range of fuel pellet diameters from 0.311 to 0.444 inches, and lattice spacings from 0.476 to 1.00 inches. In the rack designs, the fuel pellet diameters range from 0.303 to 0.3805 inches O.D. (0.496 to 0.580 inch lattice spacing) for PWR fuel and from 0.3224 to 0.494 inches O.D. (0.488 to 0.740 inch lattice spacing) for BWR fuel. Thus, the critical experiments analyzed provide a reasonable representation of power reactor fuel. Based on the data in Table 9.1A-7, there does not appear to be any observable trend with either fuel pellet diameter or lattice pitch, at least over the range of the critical experiments applicable to rack designs.

9.1A.2.2.6.4.3 Soluble Boron Concentration Effects

Various soluble boron concentrations were used in the B&W series of critical experiments and in one PNL experiment, with boron concentrations ranging up to 2550 ppm. Results of MCNP4a (and one KENO5a) calculations are shown in Table 9.1A-12. Analyses of the very high boron concentration experiments (>1300 ppm) show a tendency to slightly over predict reactivity for the three experiments exceeding 1300 ppm. In turn, this would suggest that the evaluation of the racks with higher soluble boron concentrations could be slightly conservative.

9.1A.2.2.6.5 MOX Fuel

The number of critical experiments with PuO_2 bearing fuel (MOX) is more limited than for UO_2 fuel. However, a number of MOX critical experiments have been analyzed and the results are shown in Table 9.1A-13. Results of these analyses are generally above a k_{eff} of 1.00, indicating that when Pu is present, both MCNP4a and KENO5a overpredict the reactivity. This may indicate that calculation for MOX fuel will be expected to be conservative, especially with MCNP4a. It may be noted that for the larger lattice spacings, the KEN05a calculated reactivities are below 1.00, suggesting that a small trend may exist with KENO5a. It is also possible that the overprediction in k_{eff} for both codes may be due to a small inadequacy in the determination of the Pu-241 decay and Am-241 growth. This possibility is supported by the consistency in calculated k_{eff} over a wide range of the spectral index (energy of the average lethargy causing fission).

9.1A.3 THERMAL AND HYDRAULIC ANALYSES

The Wolf Creek reracked fuel storage pool (spent fuel pool and cask loading pool with fuel storage racks installed) and the Fuel Pool Cooling and Cleanup System (FPCCS) comply with the provisions of Section III of the USNRC "OT Position Paper for Review and Acceptance of Spent Fuel Storage and Handling Applications", (April 14, 1978). The methods, models, analyses, and numerical results are summarized below.

The thermal-hydraulic qualification analyses for the rack arrays fall into the following categories:

1. Evaluation of the maximum decay heat load limit as a function of the bulk temperature limit for the postulated discharge scenario.

2. Evaluation of the postulated loss-of-forced cooling scenarios to establish that pool boiling will not occur.

3. Determination of the maximum temperature difference between the pool local temperature and the bulk pool temperature at the instant when the bulk temperature reaches its maximum value.

4. Evaluation of the maximum temperature difference between the fuel rod cladding temperature and the local pool water temperature to establish that nucleate boiling at any location around the fuel is not possible with forced cooling available.

Because the thermal and hydraulic analyses bound both the Callaway and Wolf Creek fuel storage pools, the pool water volume is conservatively based on the minimum east-west and north-south dimensions of the two pools. This conservatism results in a lower bound thermal inertia and outer periphery downcomer dimension in the thermal-hydraulic calculations.

FPCCS at Wolf Creek is described in Section 9.1.3. The fuel pool cooling system consists of two 100% capacity cooling trains for the removal of decay heat generated by irradiated fuel stored in the fuel storage pool. The decay heat generated by the stored fuel in the pool is transferred from the fuel pool cooling system through the fuel pool cooling heat exchangers. Normal makeup water to the fuel storage pool is supplied by the reactor makeup water system. An alternate source of makeup water is the RWST via the fuel pool cleanup pumps. Emergency makeup water is supplied from the Essential Service Water system. Boron addition to the fuel storage pool is normally accomplished by supplying borated water from the boric acid tanks via the boric acid blending tee. Boron may also be added by using the RWST as the source of makeup water to the fuel storage pool. Isolation of non-safety related portions of the FPCCS is a manual action.

The fuel pool cleanup system provides the capability for purification of the water in the spent fuel pool, the cask loading pool, the transfer canal, the refueling pool, and the RWST. The cleanup system is an essential adjunct to the FPCCS system to maintain clarity and water chemistry control in the fuel storage pool.

Consistent with the current plant practice, two discharge scenarios are postulated when considering fuel storage pool cooling:

i. partial core offload

ii. full-core offload

In lieu of prescribing a batch size and cooling period for the partial core offload, the maximum pool heat load is determined for a scenario of only one cooling train operating and a limit on the steady state bulk pool temperature of 140°F.

Similarly, the full core offload scenario is required to be executed so that the maximum pool heat load will not allow for bulk pool boiling at the end of a postulated 2 hour loss of forced cooling transient which occurs immediately after the full core offload. More specifically, the bulk water temperature is sought to be limited to 207°F (which includes 5°F of margin) after two hours of pool heat-up in the absence of all forced cooling paths.

Evaluation of these two scenarios provides maximum flexibility in batch sizes and cooling periods prior to offload into the pool. In both scenarios, the component cooling water (CCW), used to remove heat from the fuel pool cooler, is assumed to be at its maximum design temperature. During the partial core offload scenario CCW flow is assumed to be at its nominal rate. During full core offload conditions, CCW flow is assumed to be at its design basis flow rate. With the thermal effectiveness of the fuel pool cooler thus fixed, the requirement of the ceiling on the bulk pool temperature essentially translates into a limit on the total heat generation rate in the pool.

Finally an evaluation is performed for a loss of cooling accident occurring some time after restart. This evaluation considers a four hour long loss of forced cooling in the FPCCS followed by a twenty hour long period with cooling provided at one-half the normal coolant flow rate. Under this scenario, the fuel pool does not reach the bulk boiling temperature during the 24hour period. For this evaluation, the component cooling water to the heat exchanger is assumed to be at an elevated temperature and reduced flow rate.

9.1A.3.1 Decay Heat Load Limit

The heat load imposed on the pool is from the decay heat generated by fuel assemblies discharged into the pool. The primary safety function of the FPCCS is to adequately transport this heat load to the CCW system and thereby maintain the bulk pool temperature within specified limits. Compliance with the limiting heat load will be ensured through adjustments to the cooling system performance and/or adjustments to the fuel offload rate. Commonly used decay heat calculation methods based upon ASB 9-2, ANS 5. 1, or ORIGEN2 are used to provide conservative estimates of decay heat values for specific fuel pool inventories.

9.1A.3.1.1 Decay Heat Load Calculations and Conservatisms

The following conservatisms are applied in the decay heat load limit calculations.

- FPCCS heat exchanger thermal performance is based on the design maximum fouling and plugging level. This will conservatively minimize the heat rejection capability of the FPCCS.

- Thermal inertia induced transient effects resulting in a lag in bulk pool temperature response are neglected. This conservatively lowers the calculated decay heat load limit by forcing the peak decay heat load to coincide with the peak pool temperature.

- In calculating the fuel storage pool evaporation heat losses, the building housing the fuel storage pool is assumed to have a conservative ambient air temperature of 110°F and 100% relative humidity. This minimizes the evaporative heat loss component, maximizing the heat duty burden on the pool cooling system.

The mathematical formulation can be explained with reference to the simplified heat exchanger alignment of Figure 9.1A-10. Referring to the fuel pool cooling system, the governing differential equation can be written by utilizing conservation of energy as:

$$C\frac{dT}{d\tau} = Q(\tau) - Q_{HX}(T) - Q_{EV}(T)$$

where:

C = Pool thermal capacity, Btu/°F
T = Pool bulk temperature, °F
τ = Time after reactor shutdown, hr
$Q(\tau)$ = Time varying decay heat generation rate, Btu/hr
$Q_{HX}(T)$ = Temperature dependent FPCCS heat rejection rate, Btu/hr
$Q_{EV}(T)$ = Temperature dependent evaporative heat loss, Btu/hr

Subject to the second of the conservatisms listed above, this differential relationship can be reduced to the following algebraic relationship:

$$0 = Q_{limit} - Q_{HX}(T_{limit}) - Q_{EV}(T_{limit})$$

where:

T_{limit}, is the maximum bulk pool temperature limit, °F
Q_{limit} is the decay heat load limit, Btu/hr

$Q_{HX}(T)$ is a function of the bulk pool temperature and the coolant water flow rate and temperature, and can be written in terms of the temperature effectiveness (p) as follows:

$$Q_{HX}(T) = W_t C_t p(T - t_i)$$

where:

W_t = Coolant water flow rate, lb/hr
C_t = Coolant water specific heat capacity, Btu/(lb x °F)
p = FPCCS heat exchanger temperature effectiveness
T = Bulk pool water temperature, °F
t_i = Coolant water inlet temperature, °F

The temperature effectiveness, a measure of the heat transfer efficiency of the FPCCS heat exchangers, is defined as:

$$p = \frac{t_0 - t_i}{T - t_i}$$

where t_0 is the coolant outlet temperature (°F) and all other terms are as defined above.

$Q_{EV}(T)$ is a nonlinear function of the pool temperature and ambient temperature. Q_{EV} contains the heat evaporation losses from the pool surface, natural convection and thermal radiation from the pool surface, and heat conduction through the pool walls and slab. Experiments show that the heat conduction takes only about 4% of the total heat loss (Reference 35).

The evaporation heat loss and natural convection heat loss can be expressed as Reference 36:

$$Q_{EV}(T) = hA(T - t_a) + \varepsilon\sigma A(T^4 - t_a^4) + \alpha A(P_w - P_a)$$

where:

h = Natural convection heat transfer coefficient, Btu/(hr x ft^2 x °F)
A = Pool surface area, ft^2
t_a = Ambient pool building temperature, °F
ε = Emissivity of pool water
σ = Stephan-Boltzmann constant
α = Evaporation rate constant, Btu/(hr x ft^2 x psi)
P_w = Vapor pressure of water at pool temperature, psi
P_a = Vapor pressure of water at ambient temperature, psi

The algebraic heat balance equation is solved for the decay heat load limit by rearranging the equation given above and substituting the maximum temperature limit for pool water temperature (T). The major input values for this analysis are summarized in Table 9.1A-14.

9.1A.3.2 Margin Against Boiling

To ensure that the pool bulk temperature will remain less than 207°F (i.e., adequate margin against boiling) compliance is required under the following conditions: (1) all forced cooling paths are lost following a full core offload and cooling is not restored for two hours, and (2) a loss of coolant accident occurs after restart and partial cooling is restored after 4 hours. The FPCCS system has two independent trains, both of which are seismically qualified and safety-related, so a complete loss of forced cooling is not possible under single failure criteria. Regardless of this fact, these evaluations are performed for postulated non-mechanistic loss of forced cooling accidents.

9.1A.3.2.1 Heat-up Calculations and Conservatisms

The following conservatisms are applied in the heat-up calculations.

- The decay heat load and bulk pool temperature are assumed to be the calculated decay heat load limit and corresponding maximum pool temperature limit. Maximizing the initial temperature and the decay heat load conservatively minimizes the time-to-boil.

- The LOCA scenario, with its four hour loss of cooling to the FPCCS, is based on the decay heat load limit and corresponding peak temperature limit of the previously evaluated partial core discharge. These conditions would occur during an offload, and would therefore bound a post-restart condition.

- The transient reduction in decay heat over time is conservatively neglected. This maximizes the decay heat load at all points in time and minimizes the time-to-boil.

- Calculations verify that sufficient makeup water exists to prevent the pool water level from dropping, but no credit is taken for the reduced temperature of the makeup water. This assumes that makeup water is provided at the bulk pool temperature, conservatively minimizing the time-to-boil.

- In calculating the fuel storage pool evaporation heat losses, the building housing the fuel storage pool is assumed to have a conservative ambient air temperature of 110°F and 100% relative humidity. This conservatively minimizes the credit for evaporative heat loss.

The temperature rise of the water in the pool over any period of time is a direct function of the average net decay heat load during that period. Therefore, maximizing the decay heat load will maximize the pool temperature increase rate and minimize the corresponding time-to-boil. As a transient decay heat load would necessitate a reduced average net heat load, the steady-state assumptions are conservative.

The governing enthalpy balance equation for this condition, subject to these conservative assumptions, is written as:

$$C \frac{dT}{d\tau} = Q_{limit} - Q_{EV}(T)$$

where τ is the time after cooling is lost (hr) and all other terms are the same as defined in Section 9.1A.3.1.

This differential equation is solved using a numerical solution technique to obtain the bulk pool temperature as a function of time. The major input values for the analysis are summarized in Table 9.1A-15.

9.1A.3.2.2 Time-to-Boil

When the FPCCS forced pool cooling becomes unavailable, the pool water will begin to rise in temperature and eventually will reach the normal bulk boiling temperature of 212°F. In order to maintain some margin to this boiling condition, the analyses are performed with the acceptance criterion of a bulk pool temperature that is ≤ 207°F. The time to reach the boiling point is the shortest when the loss of forced cooling occurs at the point in time when the pool bulk temperature is at its maximum calculated value. Although the probability of the loss-of-cooling event coinciding at the instant when the pool water has reached its peak value is extremely remote, the calculations were performed under this extremely unlikely scenario.

Analysis shows that, for postulated full-core discharge, and a maximum bulk temperature of 207°F after two hours without cooling, the maximum allowable decay heat load is 63.41 MBtu/hr. The steady-state FSP temperature at this heat load would be 169.68°F.

For the loss of coolant accident scenario, the bulk temperature after four hours without cooling would be 172.1 °F. Once partial cooling is reestablished, the steady-state temperature would be less than 175°F, thereby precluding the possibility of boiling even with continued reduced cooling capacity.

9.1A.3.3 Local Pool Water Temperature

A single conservative evaluation for a bounding amalgam of conditions was performed to evaluate the local pool water temperature. The result of the single evaluation is a bounding temperature difference between the maximum local water temperature and the bulk pool temperature.

In order to determine an upper bound on the maximum local water temperature, a series of conservative assumptions are made. The most important of these assumptions are:

- With a full core discharged into the racks farthest from the coolant water inlet, the remaining cells in the spent fuel pool are postulated to be occupied with previously discharged fuel.

- The hottest assemblies, located together in the pool, are assumed to be located in "pedestal" cells of the racks. These cells have a reduced water entrance area, caused by the pedestal blocking the baseplate hole, and a correspondingly increased hydraulic resistance.

- The coolant water inlet temperature, and therefore the bulk pool temperature, is minimized to conservatively maximize the fluid viscosity. This assumption will maximize the head losses for water flowing through the fuel racks and fuel assemblies.

- No downcomer flow is assumed to exist between the rack modules.

- All rack cells are conservatively assumed to be 50% blocked at the cell outlet to account for drop accidents resulting in damage to the upper end of the cells. This blocked cell portion is conservative, since structural evaluations have shown that only about 20% of the cell is blocked subsequent to the impact of dropped objects.

- Westinghouse 17x17 STD assembly, which is most resistive to axial fluid flow, is assumed to populate the entire storage region. Thus, the hydraulic resistance to heat transfer is maximized.

9.1 A.3.3. 1 <u>Local Temperature Evaluation Methodology</u>

The inlet piping which returns cooled pool water from the FPCCS terminates above the level of the fuel racks. To demonstrate adequate cooling of hot fuel in the pool, it is necessary to rigorously quantify the velocity field in the pool created by the interaction of buoyancy driven flows and water injection/egress. A Computational Fluid Dynamics (CFD) analysis for this demonstration is required. The objective of this study is to demonstrate that the principal thermal-hydraulic criteria of ensuring local subcooled conditions in the pool is met for all postulated fuel discharge/cooling alignment scenarios. The local thermal-hydraulic analysis is performed such that partial cell blockage and slight fuel assembly variations are bounded. An outline of the CFD approach is described in the following.

There are several significant geometric and thermal-hydraulic features of the fuel storage pool which must be considered for a rigorous CFD analysis. From a fluid flow modeling standpoint, there are two regions to be considered. One region is the spent fuel pool/cask loading pool region where the classical Navier-Stokes equations are solved with turbulence effects included. The other region is the heat generating fuel assemblies located in the fuel storage racks located near the bottom of the fuel storage pool. In this region, water flow is directed vertically upwards due to buoyancy forces through relatively small flow channels formed by the Westinghouse 17x17 fuel assembly rod arrays in each rack cell. This situation shall be modeled as a porous solid region in which fluid flow is governed by the classical Darcy's Law:

$$\frac{\partial P}{\partial X_i} = -\frac{\mu}{K(i)} V_i - C\rho|V|\frac{V_i}{2}$$

where $\frac{\partial P}{\partial X_i}$ is the pressure gradient, $K(i)$, V_i and C are the corresponding permeability, velocity and inertial resistance parameters and μ is the fluid viscosity. The permeability and inertial resistance parameters for the rack cells loaded with Westinghouse 17x 17 fuel were determined based on the friction factor correlations for the laminar flow conditions typically encountered due to the low buoyancy induced velocities and the small size of the flow channels.

The fuel storage pool geometry required an adequate portrayal of large scale and small scale features, spatially distributed heat sources in the fuel storage racks and water inlet/outlet configuration. Relatively cooler bulk pool water normally flows down between the fuel rack outline and pool wall liner clearance known as the downcomer. Near the bottom of the racks, the flow turns from a vertical to horizontal direction into the bottom plenum supplying cooling water to the rack cells. Heated water issuing out of the top of the racks mixes with the bulk pool water. An adequate modeling of these features on the CFD program involves meshing the large scale bulk pool region and small scale downcomer and bottom plenum regions with sufficient number of computational cells to capture the bulk and local features of the flow field.

The distributed heat sources in the fuel storage pool racks are modeled by identifying distinct heat generation zones considering full-core discharge, bounding peak effects, and presence of background decay heat from old discharges. Three heat generating zones were modeled. The first consists of background fuel from previous discharges, the remaining two zones consist of fuel from a bounding full-core-discharge scenario. The two full core discharge zones are differentiated by one zone with higher than average decay heat generation and the other with less than average decay heat generation. The background decay heat load is determined such that the total decay heat load in the pool is equal to the calculated decay heat load limit. This is a conservative model, since all of the fuel with higher than average decay heat is placed in a contiguous area. A uniformly distributed heat generation rate was applied throughout each distinct zone.

The CFD analysis was performed on the industry standard FLUENT (Reference 40) fluid flow and heat transfer modeling program. The FLUENT code enabled buoyancy flow and turbulence effects to be included in the CFD analysis. Turbulence effects are modeled by relating time-varying "Reynolds's Stresses" to the mean bulk flow quantities with the following turbulence modeling options:

(i) k-ε Model
(ii) RNG k-ε Model
(iii) Reynolds Stress Model

The k-ε Model is considered most appropriate for the twin site CFD analysis. The k-ε turbulence model is a time-tested, general purpose turbulence model. This model has been demonstrated to give good results for the majority of turbulent fluid flow phenomena. The Renormalization Group (RNG) and Reynolds Stress models are more advanced models that were developed for situations where the k-ε Model does not provide acceptable results, such as high viscosity flow and supersonic shock. The flow regime in the bulk fluid region is such that the k-ε Model will provide acceptable results.

Rigorous modeling of fluid flow problems requires a solution to the classical Navier-Stokes equations of fluid motion (Reference 37). The governing equations (in modified form for turbulent flows with buoyancy effects included) are written as:

$$\frac{\partial \rho_0 u_i}{\partial t} + \frac{\partial \rho_0 \langle u_i' u_j' \rangle}{\partial x_i} = \frac{\partial}{\partial x_j}\left[\mu\left(\frac{\partial u_i}{\partial x_j} + \frac{\partial u_j}{\partial x_i}\right)\right] - \frac{\partial p}{\partial x_i} - \rho_0 \beta\left(T - T_0\right) g_i + \frac{\partial \rho_0 \langle u_i' u_j' \rangle}{\partial x_j}$$

where u_i are the three time-averaged velocity components. $\rho < u_i' \; u_j' >$ are time-averaged Reynolds stresses derived from the turbulence induced fluctuating velocity components, u_i', ρ_o is the fluid density at temperature, T_o, is the coefficient of thermal expansion, μ is the fluid viscosity, g_i are the components of gravitational acceleration and x_j are the Cartesian coordinate directions. The Reynolds stress tensor is expressed in terms of the mean flow quantities by defining a turbulent viscosity μ_t and a turbulent velocity scale $k^{1/2}$ as shown below (Reference 38):

$$\rho \langle u_i' u_j' \rangle = 2 / 3 \rho \; k \; \delta_{ij} - u_t \left[\frac{\partial u_i}{\partial x_j} + \frac{\partial u_j}{\partial x_i}\right]$$

The procedure to obtain the turbulent viscosity and velocity length scales involves a solution of two additional transport equations for kinetic energy (k) and rate of energy dissipation (ε). This methodology is known as the k-ε model for turbulent flows as described by Launder and Spalding (Reference 39).

Some of the major input values for this analysis are summarized in Table 9.1A-16. An isometric view of the assembled CFD model is presented in Figure 9.1 A-11.

9.1A.3.3.2 Local Water and Fuel Cladding Temperatures

Consistent with the approach to make conservative assessments of temperature, the local water temperature calculations are performed for a pool with decay heat generation equal to the maximum calculated decay heat load limit. Thus, the local water temperature evaluation is a calculation of the temperature increment over the theoretical spatially uniform value due to local hot spots (due to the presence of a highly heat emissive fuel bundle).

The CFD study has analyzed a single bounding local thermal-hydraulic scenario. In this scenario, a bounding full-core discharge is considered in which the 193 assemblies are located in the pool, farthest from the cooled water inlet, while the balance of the rack cells are postulated to be occupied by fuel from old discharges.

In this analysis, the difference between the peak local temperature and the coincident bulk pool temperature was conservatively calculated to be 64.6°F.

The peak fuel cladding superheat is determined for the hottest cell location in the pool as obtained from the CFD model for the twin site pools. The maximum temperature difference between the fuel cladding and the local water (ΔT_c) is calculated to be less than 67.4°F. Applying this calculated cladding ΔT_c, along with the maximum temperature difference between the local water temperature and the bulk pool temperature, to the bulk maximum normal operating pool temperature of 170°F yields a conservatively bounding 234.6°F maximum local water temperature and a conservatively bounding 302°F peak cladding temperature. The maximum local water temperature is lower than the 239°F local boiling temperature on top of the racks, thereby precluding nucleate boiling in the subchannel. The heat fluxes are too low to support a departure from nucleate boiling (DNB) condition. Thus, nucleate and departure from nucleate boiling do not occur anywhere within the Wolf Creek fuel storage pool.

9.1A.3.4 Fuel Rod Cladding Temperature

The temperature of the fuel rod cladding is performed for a single, bounding scenario. The maximum fuel cladding superheat above the local water temperature is calculated.

The maximum specific power of a fuel array q_A can be given by:

$$q_A = qF_{xy}$$

where:

F_{xy} = Radial peaking factor

q= Average fuel assembly specific power, Btu/hr

The peaking factors are given in Table 9.1A-16. The maximum temperature rise of pool water in the most disadvantageously placed fuel assembly, defined as the one which is subject to the highest local pool water temperature, was computed for all loading cases. Having determined the maximum local water temperature in the pool, it is now possible to determine the maximum fuel cladding temperature. A fuel rod can produce F_z times the average heat emission rate over a small length, where F_z is the axial rod peaking factor. The axial heat distribution in a rod is generally a maximum in the central region, and tapers off at its two extremities. Thus, peak cladding heat flux over an infinitesimal area is given by the equation:

$$q_c = \frac{q \; F_{xy} \, F_z}{A_c}$$

where A_c is the total cladding external heat transfer area in the active fuel length region.

Within each fuel assembly sub-channel, water is continuously heated by the cladding as it moves axially upwards from bottom to top under laminar flow conditions. Rohsenow and Hartnett (Reference 41) report a Nusselt-number based heat transfer correlation for laminar flow in a heated channel. The film temperature driving force (ΔT_f) at the peak cladding flux location is calculated as follows:

$$h_f \frac{D_h}{Kw} = Nu$$

$$\Delta \; T_f = \frac{q_c}{h_f}$$

where, h_f is the water side film heat transfer coefficient, D_h is sub-channel hydraulic diameter, Kw is water thermal conductivity and Nu is Nusselt number for laminar flow heat transfer.

In order to introduce some additional conservatism in the analysis, we assume that the fuel cladding has a crud deposit resistance R_c (equal to 1.67×10^{-4} ft^2-hr-°F/Btu), which covers the entire surface. Thus, including the temperature drop across the crud resistance, the cladding to water local temperature difference (ΔT_c) is given by:

$$\Delta \; T_c = \Delta \; T_f + R_c \, q_c$$

9.1A.3.5 Decay Heat Load Limits

The calculated decay heat load limit is summarized in Table 9.1A-17. Because all transient effects were excluded from the evaluations, this decay heat load corresponds to the invariant heat load which results in a steady-state bulk pool temperature which will not exceed the temperature limit for either the partial core or full core offload scenario.

This calculated decay heat load limit is not based on any specific discharge conditions, but is a mathematically derived quantity. Any conservative decay heat calculation used to determine the operational limits (i.e. in-core hold time requirement) necessary to avoid exceeding this decay heat load provides conservative operational limits. The operational limits are determined based on the decay heat load limit in Table 9.1A-17. Based on this limit, the fuel storage pool cooling system will remain in compliance.

9.1A.4 STRUCTURAL AND SEISMIC CONSIDERATIONS

The structural adequacy of the high density spent fuel racks are considered under all loadings postulated for normal, seismic, and accident conditions. The fuel storage racks must remain fully functional during and after a seismic disturbance. The seismic adequacy is demonstrated in response to both a Safe Shutdown Earthquake (SSE) and the Operational Design Basis Earthquake (OBE). The analyses undertaken to confirm the structural integrity of the racks are performed in compliance with the USNRC Standard Review Plan (Reference 42) and the OT Position Paper (Reference 43).

The response of a free-standing rack module to seismic inputs is highly nonlinear and involves a complex combination of motions (sliding, rocking, twisting, and turning), resulting in impacts and friction effects. Some unique attributes of rack dynamic behavior include a large fraction of the total structural mass in a confined rattling motion, friction support of rack pedestals against lateral motion, and large fluid coupling effects due to deep submergence and independent motion of closely spaced adjacent structures. Whole Pool Multi-Rack (WPMR) analysis simulates the dynamic behavior of the storage rack structures. The walls separating the Spent Fuel Pool and the Cask Loading Pool allow rack configurations to be dynamically analyzed as two separate WPMR models.

9.1A.4. 1 Analysis Methodology

An accurate simulation is obtained by direct integration of the nonlinear equations of motion with three pool slab acceleration time-histories applied as the forcing functions acting simultaneously. Reliable assessment of the stress field and kinematic behavior of the rack modules incorporates key attributes of the actual structure in a conservative dynamic model. The model must have the capability to execute the concurrent motion forms compatible with the free-standing installation of the modules.

Calculations must incorporate momentum transfers due to the rattling of fuel assemblies inside storage cells; the lift-off and subsequent impact of support pedestals with the pool liner (or bearing pad); and quantification of fluid coupling due to water mass in the interstitial spaces around rack modules. In short, there are a large number of parameters with potential influence on the rack kinematics. The comprehensive structural evaluation must deal with all of these without sacrificing conservatism.

The model must be capable of effecting momentum transfers which occur due to rattling of fuel assemblies inside storage cells and the capability to simulate lift-off and subsequent impact of support pedestals with the pool liner (or bearing pad). The contribution of the water mass in the interstitial spaces around the rack modules and within the storage cells must be modeled in an accurate manner. During dynamic rack motion, hydraulic energy is either drawn from or added to the moving rack, modifying its submerged motion in a significant manner. Therefore, the dynamics of one rack affects the motion of all others in the pool.

The 3-D rack model dynamic simulation, involving one or more spent fuel racks, handles the following array of variables:

Interface Coefficient of Friction

Parametric runs are made with upper bound and lower bound values of the coefficient of friction. The limiting values are based on experimental data which have been found to be bounded by the values 0.2 and 0.8. Simulations are also performed with the array of pedestals having randomly chosen coefficients of friction in a Gaussian distribution with a mean of 0.5 and lower and upper limits of 0.2 and O.5, respectively. In the fuel rack simulations, the Coulomb friction interface between rack support pedestal and liner is simulated by piece-wise linear (friction) elements. These elements function only when the pedestal is physically in contact with the pool liner.

Rack Beam Behavior

Rack elasticity, relative to the rack base, is included in the model by introducing linear springs to represent the elastic bending action, twisting, and extensions.

Impact Phenomena

Compression-only gap elements are used to provide for opening and closing of interfaces such as the pedestal-to-bearing pad interface, and the fuel assembly-to-cell wall interface. These interface gaps are modeled using nonlinear spring elements. The term "nonlinear spring" is a generic term used to denote the mathematical representation of the condition where a restoring force is not linearly proportional to displacement.

Fuel Loading Scenarios

The fuel assemblies are conservatively assumed to rattle in unison which obviously exaggerates the contribution of impact against the cell wall.

Fluid Coupling

The computer code DYNARACK (Reference 47) handles simultaneous simulation of all racks in the pool as a Whole Pool Multi-Rack 3-D analysis. The WPMR analyses have corroborated the accuracy of the single rack 3-D solutions in predicting the maximum structural stresses, and in improving predictions of rack kinematics.

For closely spaced racks, demonstration of kinematic compliance is verified by including all modules in one comprehensive simulation using a WPMR model. In WPMR analysis, all rack modules are modeled simultaneously and the coupling effect due to this multi-body motion is included in the analysis. Due to the superiority of this technique in predicting the dynamic behavior of closely spaced submerged storage racks, the Whole Pool Multi-Rack analysis methodology was used.

9.1A.4.1.1 Fuel Weights

For the dynamic rack simulations, the dry fuel weight is conservatively taken to be 1647 lb. This is a higher fuel weight value to account for rod control cluster assemblies (RCCAs) being stored along with fuel assemblies. Therefore, the analyses conservatively consider an RCCA to be stored along with an assembly at every location.

9.1A.4.1.2 Synthetic Time-Histories

The synthetic time-histories in three orthogonal directions (N-S, E-W, and vertical) are generated in accordance with the provisions of SRP 3.7.1 (Reference 48). A preferred criterion for the synthetic time-histories in SRP 3.7.1 calls for both the response spectrum and the power spectral density corresponding to the generated acceleration time-history to envelope their target (design basis) counterparts with only finite enveloping infractions. The time-histories for the pools have been generated to satisfy this preferred (and more rigorous) criterion. The seismic files also satisfy the requirements of statistical independence mandated by SRP 3.7.1.

Figures 9.1A-12 through 9.1A-16 provide plots of the time-history accelerograms which were generated over a 25 second duration for OBE and SSE events, respectively. These artificial time-histories are used in all non-linear dynamic simulations of the racks.

Results of the correlation function of the three time-histories are given in Table 9.1A-19. Absolute values of the correlation coefficients are shown to be less than 0.15, indicating the statistical independence of the three data sets.

9.1A.4.2 WPMR Methodology

The WPMR methodology incorporates both stress and displacement criteria. The following summarizes the sequence steps undertaken for model development:

a. Suitable 3-D dynamic models for a time-history analysis of the new maximum density racks are prepared. These models include the assemblage of all rack modules in each pool. Include all fluid coupling interactions and mechanical coupling appropriate to performing an accurate non-linear simulation. This 3-D simulation is referred to as a Whole Pool Multi-Rack model.

b. 3-D dynamic analyses are performed on various physical conditions (such as coefficient of friction and extent of cells containing fuel assemblies). Appropriate displacement and load outputs from the dynamic model for post-processing are archived.

c. A stress analysis of high stress areas for the limiting case of all the rack dynamic analysis is performed to demonstrate compliance with ASME Code Section III, Subsection NF limits on stress and displacement.

9.1A.4.2.1 Model Assumptions

The dynamic modeling of the rack structure considers all nonlinearities and parametric variations. The following assumptions are used in the Whole Pool Multi-Rack analysis of racks:

a. The fuel rack structure motion is captured by modeling the rack as a 12 degree-of-freedom structure. Movement of the rack cross-section at any height is described by six degrees-of-freedom of the rack base and six degrees-of-freedom at the rack top. In this manner, the response of the module, relative to the baseplate, is captured in the dynamic analyses once suitable springs are introduced to couple the rack degrees-of-freedom and simulate rack stiffness.

b. Rattling fuel assemblies within the rack are modeled by five lumped masses located at H,0.75H,0.5H,0.25H, and at the rack base (H is the rack height measured above the baseplate). Each lumped fuel mass has two horizontal displacement degrees-of-freedom. Vertical motion of the fuel assembly mass is assumed equal to rack vertical motion at the baseplate level. The centroid of each fuel assembly mass can be located off-center, relative to the rack structure centroid at that level, to simulate a partially loaded rack.

c. Seismic motion of a fuel rack is characterized by random rattling of fuel assemblies in their individual storage locations. All fuel assemblies are assumed to move in-phase within a rack. This exaggerates computed dynamic loading on the rack structure and, therefore, yields conservative results.

d. Fluid coupling between rack and fuel assemblies, and between rack and wall, is simulated by appropriate inertial coupling in the system kinetic energy. These effects uses the methods (References 51 and 52) for rack/assembly coupling and for rack-to-rack coupling. The fluid coupling effect in its simplest form considers the proximate motion of two bodies under water, where one body vibrates adjacent to a second body, and both bodies are submerged in frictionless fluid. During a seismic event all racks in the pool are subject to the input excitation simultaneously. The WPMR model simulates 3-D motion of all rack modules simultaneously and encompasses interaction between every set of racks in the pool, (i.e., the motion of one rack produces fluid forces on all other racks and on the pool walls).

e. Fluid damping and form drag are conservatively neglected.

f. Sloshing is found to be negligible at the top of the rack and is, therefore, neglected in the analysis of the rack.

g. Potential impacts between the cell walls of the new racks and the contained fuel assemblies are accounted for by appropriate compression only gap elements between masses involved. The possible incidence of rack-to-wall or rack-to-rack impact is simulated by gap elements at the top and bottom of the rack in two horizontal directions. Bottom gap elements are located at the baseplate elevation. The initial gaps reflect the presence of baseplate extensions, and the rack stiffnesses are chosen to simulate local structural detail.

h. Pedestals are modeled by gap elements in the vertical direction and as "rigid links" for transferring horizontal stress. Each pedestal support is linked to the pool liner (or bearing pad) by two friction springs. The spring rate for the friction springs includes any lateral elasticity of the stub pedestals. Local pedestal vertical spring stiffness accounts for floor elasticity and for local rack elasticity just above the pedestal.

i. Rattling of fuel assemblies inside the storage locations causes the gap between fuel assemblies and cell wall to change from a maximum of twice the nominal gap to a theoretical zero gap. Fluid coupling coefficients are based on the nominal gap in order to provide a conservative measure of fluid resistance to gap closure.

j. The model for the rack is considered supported, at the base level, on four pedestals modeled as nonlinear compression only gap spring elements and eight piece-wise linear friction spring elements; these elements are properly located with respect to the centerline of the rack beam, and allow for arbitrary rocking and sliding motions.

9.1A.4.2.2 Stiffness Elements

Three element types are used in the rack models. Type 1 are linear elastic elements used to represent the beam-like behavior of the integrated rack cell matrix. Type 2 elements are the piece-wise linear friction springs used to develop the appropriate forces between the rack pedestals and the supporting bearing pads. Type 3 elements are non-linear gap elements which model gap closures and subsequent impact loadings (i.e., between fuel assemblies and the storage cell inner walls, and rack outer periphery spaces.

9.1A.4.2.3 Coefficients of Friction

Multiple simulations were performed to adjust the friction coefficient ascribed to the support pedestal/pool bearing pad interface. These friction coefficients are chosen consistent with the two bounding extremes from Rabinowicz's data (Reference 50). Simulations are also performed by imposing intermediate value friction coefficients developed by a random number generator with Gaussian normal distribution characteristics. The assigned values are then held constant during the entire WPMR simulation in order to obtain reproducible results, closer to realistic structural conditions.

9.1A.4.2.4 Governing Equations of Motion

Using the structural model discussed in the foregoing, equations of motion corresponding to each degree-of-freedom are obtained using Lagrange's Formulation (Reference 53). The system kinetic energy includes contributions from solid structures and from trapped and surrounding fluid. The final system of equations obtained have the matrix form:

$$[M]\left[\frac{d^2 q}{d\ t^2}\right] = [Q] + [G]$$

where:

[M] = total mass matrix (including structural and fluid mass contributions). The size of this matrix will be 22n x22n for a WPMR analysis (n = number of racks in the model).

q = the nodal displacement vector relative to the pool slab displacement (the term with q indicates the second derivative with respect to time, i.e., acceleration)

[G]= a vector dependent on the given ground acceleration

[Q] = a vector dependent on the spring forces (linear and nonlinear) and the coupling between degrees-of-freedom

$$\left[\frac{d^2 q}{d\ t^2}\right] = [M]^{-1}[Q] + [M]^{-1}[G]$$

This equation set is mass uncoupled, displacement coupled at each instant in time. The numerical solution uses a central difference scheme built into the computer program DYNARACK (Reference 47).

9.1A.4.3 Structural Evaluation of the Fuel Rack Design

There are two sets of criteria to be satisfied by the rack modules:

a. Kinematic Criteria

Per Reference (Reference 42), in order to be qualified as a physically stable structure it is necessary to demonstrate that an isolated rack in water would not overturn when an event of magnitude:

- 1.5 times the upset seismic loading condition is applied.
- 1.1 times the faulted seismic loading condition is applied.

b. Stress Limit Criteria

Stress limits must not be exceeded under the postulated load combinations provided herein.

9.1A.4.3.1 Stress Limit Evaluations

The stress limits that apply to the rack structure are derived from the ASME Code, Section III, Subsection NF (Reference 55). Parameters and terminology are in accordance with the ASME Code. Material properties are obtained from the ASME Code Appendices (Reference 56), and are listed in Table 9.1A-18. For convenience, the stress results are presented in dimensionless form. Dimensionless stress factors are defined as the ratio of the actual developed stress to the specified limiting value. The limiting value of each stress factor is 1.0, based on the allowable strengths for each level, for Levels A, B, and D. Stress factors reported are:

R_1 = Ratio of direct tensile or compressive stress on a net section to its allowable value (note pedestals only resist compression)

R_2 = Ratio of gross shear on a net section in the x-direction to its allowable value

R_3 = Ratio of maximum x-axis bending stress to its allowable value for the section

R_4 = Ratio of maximum y-axis bending stress to its allowable value for the section

R_5 = Combined flexure and compressive factor (as defined in the foregoing)

R_6 = Combined flexure and tension (or compression) factor (as defined in the foregoing)

R_7 = Ratio of gross shear on a net section in the y-direction to its allowable value

9.1A.4.3.2 Loads and Loading Combinations for Fuel Storage Racks

The applicable loads and their combinations which must be considered in the seismic analysis of rack modules is excerpted from Refs. (Reference 43) and (Reference 57). The load combinations considered are identified below:

Loading Combination	Service Level
$D + L$ $D + L + T_o$ $D + L + T_o + E$	Level A
$D + L + T_a + E$ $D + L + T_o + P_f$	Level B
$D + L + T_a + E'$ $D + L + T_o +$	Level D The functional capability of the fuel racks must be demonstrated.

Where:

D = Dead weight-induced loads (including fuel assembly weight)

L = Live Load (not applicable for the fuel rack, since there are no moving objects in the rack load path)

P_f = Upward force on the racks caused by postulated stuck fuel assembly

F_d = Impact force from accidental drop of the heaviest load from the maximum possible height.

E = Operating Basis Earthquake (OBE)

E' = Safe Shutdown Earthquake (SSE)

T_o = Differential temperature induced loads (normal operating or shutdown condition based on the most critical transient or steady state condition)

T_a = Differential temperature induced loads (the highest temperature associated with the postulated abnormal design conditions)

T_a and T_o produce local thermal stresses. The worst thermal stress field in a fuel rack is obtained when an isolated storage location has a fuel assembly generating heat at maximum postulated rate and surrounding storage locations contain no fuel. Heated water makes unobstructed contact with the inside of the storage walls, thereby producing maximum possible temperature difference between adjacent cells. Secondary stresses produced are limited to the body of the rack; that is, support pedestals do not experience secondary (thermal) stresses.

9.1A.4.3.3 Parametric Simulations

The table below presents a complete listing of the parametric simulations performed. Consideration of the parameters described above resulted in the following 19 runs.

Run	Pool	COF	Event
1	SFP	0.8	SSE
2	SFP	0.2	SSE
3	SFP	Random	SSE
4	SFP	0.8	OBE
5	SFP	0.2	OBE
6	SFP	Random	OBE
7	Cask Loading Pool	0.8	SSE
8	Cask Loading Pool	0.2	SSE
9	Cask Loading Pool	Random	SSE
10	Cask Loading Pool	0.8	OBE
11	Cask Loading Pool	0.2	OBE
12	Cask Loading Pool	Random	OBE
13	SFP (half full)	0.8	SSE
14	SFP (half full)	0.2	SSE
15	SFP (half full)	Random	SSE
16	Single Rack - Overturning Check	0.8	OBE x 1.5
17	Single Rack - Overturning Check	0.2	SSE x 1.1

9.1A.4.3.4 Time History Simulation Results

The results from the DYNARACK runs are presented by extracting the worst case values from the parameters of interest; namely displacements, support pedestal forces, impact loads, and stress factors.

9.1A.4.3.4.1 Rack Displacements

Selected rack to wall and rack to rack gaps were evaluated over the entire duration of the 0.8 COF SSE simulation (run 1) for three selected locations around the perimeter of SFP rack no. 14. This simulation produced the largest displacement (0.677") of any rack in the SFP. Rack 2 in the Cask Loading Pool (run 9) experiences a larger displacement of (1.274"). However, in the Cask Loading Pool the rack to wall gaps are larger. Therefore, SFP Rack 14 is chosen for displacement plotting because the displacements are of greater significance for the SFP simulations.

Rack to rack impacts may be identified when rack gaps are momentarily reduced to a value of zero or less. Rack to wall impacts did not occur under any of the simulations.

A tabulated summary of the maximum displacement for each simulation is provided below with the location/direction terms defined as follows:

uxt, uyt = displacement of top corner of rack, relative to the slab, in the North-South and East-West directions, respectively. The maximum displacements for every simulation, including the single rack tipover analyses, occurred at the top of the racks shown in the last table column.

Simulations 16 and 17 were performed to evaluate the potential for overturning of a rack to account for the unlikely possibility of a seismic event occurring during the installation process. The heaviest racks with the narrowest pedestal stance are chosen for these simulations, since these racks are expected to produce the greatest displacements during seismic events. All of these simulations were performed with half loaded racks to further increase displacements. The largest displacement is less than 0.5 inches and is not a tipover concern.

The following maximum rack displacements (in inches) are obtained for each of the runs:

Pool	Event	Run	COF	Maximum Displacement (inches)	Location/ Direction	Rack
Spent Fuel Pool	SSE	1	0.8	0.677	uxt	14
	SSE	2	0.2	0.428	uyt	7
	SSE	3	Random	0.642	uxt	15
	OBE	4	0.8	0.341	uyt	1
	OBE	5	0.2	0.280	uyt	1
	OBE	6	Random	0.343	uyt	1
Cask Loading Pool	SSE	7	0.8	1.274	uyt	2
	SSE	8	0.2	0.720	uxt	1
	SSE	9	Random	0.965	uyt	3
	OBE	10	0.8	0.275	uxt	1
	OBE	11	0.2	0.275	uxt	1
	OBE	12	Random	0.275	uxt	1
Half full SFP	SSE	13	0.8	0.3921	uxt	6
	SSE	14	0.2	0.562	uyt	8
	SSE	15	Random	0.578	uyt	6
Tipover	OBE	16	0.8	0.288	-	-
Tipover	SSE	17	0.8	0.338	-	-

Note: All of the maximum displacements occurred at the tops of the storage racks, as expected from swaying, bending, and tipping behavior.

9.1A.4.3.4.2 Pedestal Vertical Forces

Pedestal number 1 for each rack is located in the northeast corner of the rack. Numbering increases counterclockwise around the periphery of each rack. The following bounding vertical pedestal forces (in kips) are obtained for each run:

Pool	Event	Run	COF	Maximum Pedestal Load (kips)	Rack	Ped.
Spent Fuel Pool	SSE	1	0.8	291	12	3
	SSE	2	0.2	235	3	2
	SSE	3	Random	267	1	4
	OBE	4	0.8	203	1	4
	OBE	5	0.2	188	1	2
	OBE	6	Random	204	1	4
Cask Loading Pool	SSE	7	0.8	197	3	3
	SSE	8	0.2	162	1	4
	SSE	9	Random	159	3	4
	OBE	10	0.8	103	1	1
	OBE	11	0.2	103	1	2
	OBE	12	Random	103	1	2
Half full SFP	SSE	13	0.8	211	6	4
	SSE	14	0.2	220	4	3
	SSE	15	Random	255	3	2

The highest pedestal load of 291,000 lbs occurs in run 1.

9.1A.4.3.4.3 Pedestal Friction Forces

The maximum (x or y direction) shear load (in kips) bounding all pedestals in the simulation are reported below and are obtained by inspection of the complete tabular data.

Pool	Event	Run	COF	Maximum Friction Load (kips)
Spent Fuel Pool	SSE	1	0.8	103.0
	SSE	2	0.2	46.8
	SSE	3	Random	99.3
	OBE	4	0.8	39.7
	OBE	5	0.2	31.4
	OBE	6	Random	41.4
Cask Loading Pool	SSE	7	0.8	58.9
	SSE	8	0.2	30.7
	SSE	9	Random	57.5
	OBE	10	0.8	15.1
	OBE	11	0.2	15.7
	OBE	12	Random	15.4
Half full SFP	SSE	13	0.8	61.0
	SSE	14	0.2	39.6
	SSE	15	Random	84.7

9.1A.4.3.4.4 Rack Impact Loads

A freestanding rack, by definition, is a structure subject to potential impacts during a seismic event. Impacts arise from rattling of the fuel assemblies in the storage rack locations and, in some instances, from localized impacts between the racks. The following instantaneous maximum impact forces and locations are identified for each of the simulations performed. Listings are only given for those simulations within which impact occurred. It may be noted that all impact loads occurred at the bottom of the racks where the gap was modeled as only 1/8 inch. No impacts occurred for the 0.8 COF condition, since under higher friction the relative rack displacement at the base plate level was reduced to less than the 1/8" gap. The element numbering is identified in Figures 9.1A-17 through 9.1A-22.

Pool	**Event**	**Run**	**COF**	**Maximum Impact Load (kips)**	**Element**
Spent Fuel Pool	SSE	2	0.2	25.20	396
	SSE	3	Random	41.03	408
Half full SFP	SSE	14	0.2	47.9	213

9.1A.4.3.4.5 Rack to Wall Impacts

Storage racks do not impact the pool walls under any simulation.

9.1A.4.3.4.6 Fuel to Cell Wall Impact Loads

A review of all simulations performed allows determination of the maximum instantaneous impact load between fuel assembly and fuel cell wall at any modeled impact site. The maximum fuel/cell wall impact load values are reported in the following table:

Pool	Event	Run	COF	Maximum Impact Load (lb.)	Rack
Spent Fuel Pool	SSE	1	0.8	641	12
	SSE	2	0.2	625	10
	SSE	3	Random	641	13
	OBE	4	0.8	370	6
	OBE	5	0.2	371	6
	OBE	6	Random	371	6
Cask Loading Pool	SSE	7	0.8	710	1
	SSE	8	0.2	590	2
	SSE	9	Random	659	2
	OBE	10	0.8	403	1
	OBE	11	0.2	378	3
	OBE	12	Random	360	1
Half full SFP	SSE	13	0.8	565	6
	SSE	14	0.2	781	4
	SSE	15	Random	840	7

Based on fuel manufacturer's data, loads of this magnitude will not damage the fuel assembly.

9.1A.4.3.5 Rack Structural Evaluation

9.1A.4.3.5.1 Rack Stress Factors

With time history results available for pedestal normal and lateral interface forces, the limiting bending moment and shear force at the bottom casting-pedestal interface is available as a function of time. In particular, maximum values for the previously defined stress factors can be determined for every pedestal in the array of racks. With this information available, the structural integrity of the pedestal can be assessed and reported. The net section maximum (in time) bending moments and shear forces can also be determined at the bottom casting-rack cellular structure interface for each spent fuel rack in the pool. With this information in hand, the maximum stress in the limiting rack cell (box) can be evaluated.

An evaluation of the stress factors for all of the simulations performed, leads to the conclusion that all stress factors, as defined in Section 9.1A.4.3. 1, are less than the mandated limit of 1.0 for the load cases examined.

From all of the simulations reported in the tables, the bounding stress factors are summarized below. The maximum stress factor is always R_6, defined in section 9.1A.4.3.1.

Pool	**Event**	**Run**	**COF**	**Maximum Stress Factor**	**Rack**
Spent Fuel Pool	SSE	1	0.8	0.389	12
	SSE	2	0.2	0.264	3
	SSE	3	Random	0.338	12
	OBE	4	0.8	0.441	1
	OBE	5	0.2	0.423	1
	OBE	6	Random	0.442	1
Cask Loading Pool	SSE	7	0.8	0.330	2
	SSE	8	0.2	0.289	1
	SSE	9	Random	0.309	2
	OBE	10	0.8	0.378	1
	OBE	11	0.2	0.377	1
	OBE	12	Random	0.378	1
Half full SFP	SSE	13	0.8	0.241	6
	SSE	14	0.2	0.261	8
	SSE	15	Random	0.289	8

The requirements of Section 9.1A.4.3 are satisfied for the load levels considered for every limiting location in every rack in the array. Stress factors for SSE are calculated based on SSE allowable strengths, while stress factors for OBE simulations are based on OBE allowable strengths.

9.1A.4.3.5.2 Pedestal Thread Shear Stress

The complete post-processor results give thread stresses under faulted conditions for every pedestal for every rack in the pool. The average shear stress in the engagement region is given below for the limiting pedestal in each simulation.

Pool	Event	Run	COF	Maximum Thread Shear Stress (psi)	Rack
Spent Fuel Pool	SSE	1	0.8	9268	12
	SSE	2	0.2	7484	3
	SSE	3	Random	8503	1
	OBE	4	0.8	6465	1
	OBE	5	0.2	5987	1
	OBE	6	Random	6497	1
Cask Loading Pool	SSE	7	0.8	6274	3
	SSE	8	0.2	5159	1
	SSE	9	Random	5064	3
	OBE	10	0.8	3280	1
	OBE	11	0.2	3280	1
	OBE	12	Random	3280	1
Half full SFP	SSE	13	0.8	6720	6
	SSE	14	0.2	7006	4
	SSE	15	Random	8121	3

The ultimate strength of the female part of the pedestal is 66,200 psi. The yield stress for this material is 21,300 psi.

The allowable shear stress for Level B conditions is 0.4 times the yield stress which gives 8,520 psi and is much larger than the maximum calculated stress value of 6,497 psi for the OBE simulations.

The allowable shear stress for Level D conditions is the lesser of: 0.72 S_y = 15,336 psi or 0.42 S_u = 27,804 psi. Therefore, the former criteria controls and the allowable is much larger than the maximum calculated stress value of 9,268 psi for the SSE condition. Therefore, thread shear stresses are acceptable under all conditions.

9.1A.4.3.5.3 Local Stresses Due to Impacts

Impact loads at the pedestal base produce stresses in the pedestal for which explicit stress limits are prescribed in the Code. However, impact loads on the cellular region of the racks produce stresses which attenuate rapidly away from the loaded region. This behavior is characteristic of secondary stresses.

Even though limits on secondary stresses are not prescribed in the Code for class 3 NF structures, evaluations must be made to ensure that the localized impacts do not lead to plastic deformations in the storage cells which affect the subcriticality of the stored fuel array.

a. Impact Loading Between Fuel Assembly and Cell Wall

Local cell wall integrity is conservatively estimated from peak impact loads. Plastic analysis is used to obtain the limiting impact load which would lead to gross permanent deformation. Fuel impacts are demonstrated not to represent a significant concern with respect to fuel rack cell deformation.

b. Impacts Between Adjacent Racks

The bottom of the storage racks will impact each other at a few locations during seismic events. Since the loading is presented edge-on to the 3/4" baseplate membrane, the distributed stresses after local deformation will be negligible. The impact loading will be distributed over a significant portion of the entire baseplate length. The resulting compressive stress from the highest impact load is negligible. This is a conservative computation, since the simulation assumes a local impact site. Therefore, any deformation will not effect the configuration of the stored fuel.

9.1A.4.3.5.4 Assessment of Rack Fatigue Margin

Deeply submerged high density spent fuel storage racks arrayed in close proximity to each other in a free-standing configuration behave primarily as a nonlinear cantilevered structure when subjected to 3-D seismic excitations. In addition to the pulsations in the vertical load at each pedestal, lateral friction forces at the pedestal/bearing pad-liner interface, which help prevent or mitigate lateral sliding of the rack, also exert a time-varying moment in the baseplate region of the rack. The friction-induced lateral forces act simultaneously in x and y directions with the requirement that their vectorial sum does not exceed μV, where μ is the limiting interface coefficient of friction and V is the concomitant vertical thrust on the liner (at the given time instant). As the vertical thrust at a pedestal location changes, so does the maximum friction force, F, that the interface can exert. In summary, the horizontal friction force at the pedestal/liner interface is a function of time; its magnitude and direction of action varies during the earthquake event.

The time-varying lateral (horizontal) and vertical forces on the extremities of the support pedestals produce stresses at the root of the pedestals in the manner of an end-loaded cantilever. The stress field in the cellular region of the rack is quite complex, with its maximum values located in the region closest to the pedestal. The maximum magnitude of the stresses depends on the severity of the pedestal end loads and on the geometry of the pedestal/rack baseplate region.

Alternating stresses in metals produce metal fatigue if the amplitude of the stress cycles is sufficiently large. In high density racks designed for sites with moderate to high postulated seismic action, the stress intensity amplitudes frequently reach values above the material endurance limit, leading to expenditure of the fatigue "usage" reserve in the material.

Because the locations of maximum stress (viz., the pedestal/rack baseplate junction) and the close placement of racks, a post-earthquake inspection of the high stressed regions in the racks is not feasible. Therefore, the racks are engineered to withstand multiple earthquakes without reliance of nondestructive inspections for post-earthquake integrity assessment. The fatigue life evaluation of racks is an integral aspect of a sound design.

A time-history analysis was performed to provide the means to obtain a complete cycle history of the stress intensities in the highly stressed regions of the rack.

To evaluate the cumulative damage factor, a finite element model of a portion of the spent fuel rack in the vicinity of a support pedestal is constructed in sufficient detail to provide an accurate assessment of stress intensities. The finite element solutions for unit pedestal loads in three orthogonal directions are combined to establish the maximum value of stress intensity as a function of the three unit pedestal loads. Using the archived results of the spent fuel rack dynamic analyses (pedestal load histories versus time), enables a time-history of stress intensity to be established at the most limiting location. This permits establishing a set of alternating stress intensity ranges versus cycles for an SSE and an OBE event. Following ASME Code guidelines for computing U, it is found that U = 0.404 due to the combined effect of one SSE and twenty OBE events. This is well below the ASME Code limit of 1.0.

9.1A.4.3.5.5 Weld Stresses

Weld locations subjected to significant seismic loading are at the bottom of the rack at the baseplate-to-cell connection, at the top of the pedestal support at the baseplate connection, and at cell-to-cell connections. Bounding values of resultant loads are used to qualify the connections.

a. Baseplate-to-Rack Cell Welds

For Level A or B conditions, Reference 55 permits an allowable weld stress of $\tau = 0.3\ S_u$. The allowable value may be increased for Level D by the ratio 1.8. The highest predicted weld stress for OBE is calculated from the highest R_6 value. The highest predicted weld stress is less than the allowable weld stress value. The highest predicted weld stress for SSE is less than the allowable weld stress value as shown in Table 9.1A-20. Therefore, all weld stresses between the baseplate and cell wall base are acceptable.

b. Baseplate-to-Pedestal Welds

The weld between the baseplate and the support pedestal is checked using finite element analysis to determine the maximum stress under a Level B or Level D event. The calculated stress values are below the allowable values.

c. Cell-to-Cell Welds

Cell-to-cell connections are by a series of connecting welds along the cell height. Stresses in storage cell to cell welds develop due to fuel assembly impacts with the cell wall. These weld stresses are conservatively calculated by assuming that fuel assemblies in adjacent cells are moving out of phase with one another so that impact loads in two adjacent cells are in opposite directions; this tends to separate the two cells from each other at the weld. Table 9.1A-20 gives results for the maximum allowable load that can be transferred by these welds based on the available weld area. An upper bound on the load required to be transferred is also given in Table 9.1A-20 and is much lower than the allowable load. This upper bound value is very conservatively obtained by applying the bounding rack-to-fuel impact load from any simulation in two orthogonal directions simultaneously, and multiplying the result by 2 to account for the simultaneous impact of two assemblies. An equilibrium analysis at the connection then yields the upper bound load to be transferred. It is seen from the results in Table 9.1A-20 that the calculated load is well below the allowable.

9.1A.4.3.5.6 Bearing Pad Analysis

To protect the pool slab from high localized dynamic loadings, bearing pads are placed between the pedestal base and the slab. Fuel rack pedestals impact on these bearing pads during a seismic event and pedestal loading is transferred to the liner. Bearing pad dimensions are set to ensure that the average pressure on the slab surface due to a static load plus a dynamic impact load does not exceed the American Concrete Institute, ACI-349 (Reference 58) limit on bearing pressures. The maximum vertical pedestal load is 291,000 Lb. (SSE event). The maximum allowable concrete bearing pressure is 2,380 psi.

Calculations show that the average pressure at the slab/liner interface is well below the allowable value of 2,380 psi.

The stress distribution in the bearing pad is also evaluated. The maximum bending stress in the bearing pad under the peak vertical load is acceptable.

Therefore, the bearing pad design devised for the Wolf Creek is appropriate for the prescribed loadings.

9.1A.4.3.5.7 Level A Evaluation

The Level A condition is not a governing condition for spent fuel racks since the general level of loading is far less than Level B loading. To illustrate this, the heaviest spent fuel rack is considered under the dead weight load. It is shown below that the maximum pedestal load is low and that further stress evaluations are unnecessary.

LEVEL A MAXlMUM PEDESTAL LOAD

Dry Weight of Largest Holtec Rack (Bl is 13x13 cells) = 25,970 Lbf.

Dry Weight of 169 Fuel Assemblies = 278,343 Lbf.

Total Dry Weight = 304,313 Lbf.

Total Buoyant Weight (0.87 x Total Dry Weight) = 264,752 Lbf.

Load per Pedestal = 66,188 Lbf.

The stress allowables for the normal condition is the same as for the upset condition, which resulted in a maximum pedestal load of 204,000 Lb. Since this load (and the corresponding stress throughout the rack members) is much greater than the 66,188 lb. load calculated above, the upset (OBE) condition controls over normal (Gravity) condition. Therefore, no further evaluation is performed.

9.1A.4.3.5.8 Hydrodynamic Loads on Pool Walls

The maximum hydrodynamic pressures (in psi) that develop between the fuel racks and the spent fuel pool walls due to fluid coupling are listed below. The runs are selected to represent the worst case conditions.

Pool	**Run**	**Maximum Pressure (psi)**	**Minimum Pressure (psi)**
Spent Fuel Pool	1	10.3	-9.3
	2	11.1	-13.4
	3	9.9	-10.2
	4	4.6	-5.3
	5	4.6	-5.3
	6	4.7	-5.4
Cask Loading Pool	7	3.7	-4.5
	8	4.6	-4.9
	9	4.3	-3.6
	10	2.2	-1.9
	11	2.3	-1.9
	12	2.2	-2.0

These hydrodynamic pressures were considered in the evaluation of the Spent Fuel Building and Pool Structure.

9.1A.4.4 Fuel Pool Structure Integrity

The Wolf Creek fuel storage pool is a safety related, seismic category 1, reinforced concrete structure. Spent fuel is to be placed within storage racks located in the fuel storage pool. The fuel storage pool includes the spent fuel pool and the cask loading pool with fuel storage racks installed. The area is collectively referred to in this section as the fuel pool structure. An analysis was performed to demonstrate the structural adequacy of the pool structure, as required by Section IV of the USNRC OT Position Paper (Reference 63).

The fuel storage pool regions are analyzed using the finite element method. Results for individual load components are combined using factored load combinations mandated by SRP 3.8.4 (Reference 64) based on the "ultimate strength" design method. It is demonstrated that for the critical bounding factored load combinations, structural integrity is maintained when the pools are assumed to be fully loaded with spent fuel racks, as shown in Figure 9.1-2 with all storage locations occupied by fuel assemblies.

The regions examined in for the fuel storage pool include the floor slabs and the highly loaded wall sections adjoining the slabs. Both moment and shear capabilities are checked for concrete structural integrity. Local punching and bearing integrity of the slab in the vicinity of a rack module support pedestal pad is evaluated. All structural capacity calculations are made using design formulas meeting the requirements of the American Concrete Institute (ACI).

9.1A.4.4.1 Description of Fuel Storage Pool Structure

The FSP is located inside the Fuel Building and is supported on a two way, reinforced concrete base mat which is founded six feet below grade. The minimum thickness of the mat is 6.5 feet and the mat beneath the Spent Fuel Pool is thirteen feet thick. The Cask Loading Pool is located to the South of the SFP and is supported by the base mat which is 7.5 feet thick in this vicinity. The SFP and Cask Loading Pool are separated by a three foot thick reinforced concrete wall. Figure 9.1A-23 shows an isometric view of the SFP, Cask Loading Pool and surrounding major structural features of interest (i.e., Fuel Transfer Canal and Cask Washdown Pit).

Figure 9.1A-24 shows the major structural dimensions of the pool. The floor liner plate of the SFP is located at elevation 2006.5 and the floor liner plate of the Cask Loading Pool is 5.5 feet lower at elevation 2001. The spent fuel area operating floor is at elevation 2047.5.

9.1A.4.4.2 Definition of Loads

Pool structural loading involves the following discrete components:

9.1A.4.4.2.1 Static Loading (Dead Loads and Live Loads)

1. Dead weight of pool structure includes the weight of the Fuel Building concrete upper structure.

2. Maximum dead weight of rack modules and fuel assemblies stored in the modules based on 2363 storage locations in the Spent Fuel Pool and 279 storage locations in the Cask Loading Pool, as shown in Figure 9.1-2.

3. Dead weight of a shipping cask including yoke of 250 kips.

4. The Cask Handling Crane and Spent Fuel Handling Machine (Refueling Platform) are designed to move along the N-S direction. The dead weight and the rated lift weight of these cranes are considered as dead load and live load, respectively.

5. The hydrostatic water pressure.

9.1A.4.4.2.2 Seismic Induced Loads

1. Vertical loads transmitted by the rack support pedestals to the slab during a SSE or OBE seismic event.

2. Hydrodynamic inertia loads due to the contained water mass and sloshing loads (considered in accordance with (Reference 66)) which arise during a seismic event.

3. Hydrodynamic pressures between racks and pool walls caused by rack motion in the pool during a seismic event.

4. Seismic inertia force of the walls and slab.

9.1A.4.4.2.3 Thermal Loading

Thermal loading is defined by the temperature existing at the faces of the pool concrete walls and slabs. Two thermal loading conditions are evaluated: The normal operating temperature and the accident temperature. The effect of gamma heating on the concrete was also considered and requires the implementation of administrative controls to maintain concrete temperatures within acceptable ranges, as discussed in section 9.1A.4.4.5.

9.1A.4.4.2.4 Pool Water Loading

The loadings described above were considered for two possible scenarios: one considers the Cask Loading Pool full of water and the other considers the Cask Loading Pool empty.

9.1A.4.4.3 Analysis Methodology

9.1A.4.4.3.1 Finite Element Analysis Model

The finite element model encompasses the entire Spent Fuel Pool and three other reinforced concrete structures located immediately adjacent to the Spent Fuel Pool (the Cask Loading Pool, the Transfer Canal and the Cask Washdown Pit). The interaction with the rest of the Fuel Building reinforced concrete, which is not included in the finite-element model, is simulated by imposing appropriate boundary conditions. The structural area of interest for the fuel storage pool includes only two, the spent fuel pool and the cask loading pool. However, by augmenting these areas of interest with the addition of the Transfer Canal and the Cask Washdown Pit, the constructed finite-element model and numerical investigation are enhanced because the perturbation induced by the boundary conditions on the stress field distribution for the area of interest is minimized.

The preprocessing capabilities of the STARDYNE computer code (Reference 67) are used to develop the 3-D finite-element model. The STARDYNE finite-element model contains 9866 nodes, 3696 solid type finite-elements, 4411 plate type finite-elements and 16 hydro-dynamic masses.

The dynamic behavior of the water mass contained in the Spent Fuel Pool and Cask Loading Pool during a seismic event is modeled according to the guidelines set in TID-7024 (Reference 66).

To simulate the interaction between the modeled region and the rest of the Fuel Building a number of boundary restraints were imposed upon the described finite-element model.

The behavior of the reinforced concrete existing in the structural elements (walls, slab and mat) is considered elastic and isotropic. The elastic characteristics of the concrete are independent of the reinforcement contained in each structural element for the case when the un-cracked cross-section is assumed. This assumption is valid for all load cases with the exception of the thermal loads, where for a more realistic description of the reinforced concrete cross-section including the assumption of cracked concrete is used. To simulate the variation and the degree of cracking patterns, the original elastic modulus of the concrete is modified in accordance with Reference (Reference 65).

9.1A.4.4.3.2 Analysis Technique

The structural region isolated from the Fuel Building and comprised of four pools (the Spent Fuel Pool, the Cask Loading Pool, the Transfer Canal and the Cask Washdown Pit) is numerically investigated using the finite element method. The pool walls and their supporting reinforced concrete mat are represented by a 3-D finite-element model.

The individual loads considered in the analysis are grouped in five categories: dead load (weight of the pool structure, dead weight of the rack modules and stored fuel, dead weight of the reinforced concrete Fuel Building upper structure, the dead weight of the Cask Handling Crane (CHC) and the Spent Fuel Handling Machine (SFHM), and the hydro-static pressure of the contained water), live loads (CHC and SFHM suspended loads), thermal loads (the thermal gradient through the pool walls and slab for normal operating and accident conditions) and the seismic induced forces (structural seismic forces, interaction forces between the rack modules and the pool slab, seismic loads due to self-excitation of the pool structural elements and contained water, and seismic hydro-dynamic interaction forces between the rack modules and the pool walls for both OBE and SSE conditions). The dead and thermal loads are considered static acting loads, while the seismic induced loads are time-dependent.

The material behavior under all type of loading conditions is described as elastic and isotropic representing the un-cracked characteristics of the structural elements cross-section, with the exception of the thermal load cases where the material elasticity modulus is reduced in order to simulate the variation and the degree of the crack patterns. This approach (Reference 65) acknowledges the self-relieving nature of the thermal loads. The degree of reduction of the elastic modulus is calculated based on the average ultimate capacity of the particular structural element.

The numerical solution (displacements and stresses) for the cases when the structure was subjected to dead and thermal loads is a classical static solution. For the time-dependent seismic induced loads the displacement and stress field are calculated employing the spectra (shock) method. This method requires a prior modal eigenvector and eigenvalues extraction. Natural frequencies of the 3-D finite-element model are calculated up to the rigid range, considered as greater than 34 Hz. Three independent orthogonal acceleration spectra are applied to the model. The acceleration spectra are considered to act simultaneously in three-directions. The SRSS method is used to sum the similar quantities calculated for each direction.

Results for individual load cases are combined using the factored load combinations discussed below considering two scenarios: first, when the Spent Fuel Pool and the Cask Storage Pool are full of water (SC1); and second, when only the Spent Fuel Pool (SC2) is full of water. The combined stress resultants are compared with the ultimate moments and shear capacities of all structural elements pertinent to the Spent Fuel Pool and Cask Storage Pool, which are calculated in accordance with the ACI 318-(Reference 59) to develop the safety factors.

9.1A.4.4.3.3 Load Combinations

The various individual load cases are combined in accordance with the NUREG-0800 Standard Review Plan (Reference 64) requirements with the intent to obtain the most critical stress fields for the investigated reinforced concrete structural elements.

For "Service Load Conditions" the following load combinations are:

- Load Combination No. 1 = 1.4*D + 1.7*L
- Load Combination No. 2 = 1.4*D + 1.7*L + I.9*E
- Load Combination No. 3 = 1.4*D + 1.7*L - l.9*E
- Load Combination No. 4 = 0.75*(1.4* D + 1.7*L + I.9*E +1.7*T_o)
- Load Combination No. 5 = 0.75*(1.4* D + 1.7*L - l.9*E +1.7*T_o)
- Load Combination No. 6 = 1.2*D + 1.9*E
- Load Combination No. 7 = 1.2*D - 1.9*E

For "Factored Load Conditions" the following load combinations are:

- Load Combination No. 8 = D + L + T_o + E'
- Load Combination No. 9 = D + L + T_o - E'
- Load Combination No. 10 = D + L + T_a + 1.25*E
- Load Combination No. 11 = D + L + T_a - 1.25*E
- Load Combination No. 12 = D + L + T_a + E'
- Load Combination No. 13 = D + L + T_a - E'

where:

D = dead loads;
L = live loads;
T_o = thermal load during normal operation;
T_a = thermal load under accident condition;
E = 0BE earthquake induced loads;
E' = SSE earthquake induced loads.

9.1A.4.4.3.4 Results of Analyses

The STARDYNE computer code was used to obtain the stress and displacement fields for 18 individual load cases covering the two scenarios: SC1 (spent fuel pool and cask loading pool full of water) and SC2 (spent fuel pool fuel pool full of water and the cask loading pool empty).

The STARDYNE postprocessing capability was employed to form the appropriate load combinations and to establish the limiting bending moments and shear forces in various sections of the pool structure. A total of 26 load combinations were computed. Section limit strength formulas for bending loading were computed using appropriate concrete and reinforcement strengths. For Wolf Creek the concrete and reinforcement allowable strengths are:

concrete f_c' = 4,000 psi
reinforcement f_y = 60,000 psi

Table 9.1A-21 shows results from potentially limiting load combinations for the bending strength of the slab and walls. For each section, we define the limiting safety margins as the limited strength bending moment or shear force defined by ACI for that structural section divided by the calculated bending moment or shear force (from the finite element analyses). The major regions of the pool structure consist of six concrete walls delimiting the SFP and Cask Storage Pool. Each area is searched independently for the maximum bending moments in different bending directions and for the maximum shear forces. Safety margins are determined from the calculated maximum bending moments and shear forces based on the local strengths. The procedures are repeated for all the potential limiting load combinations. Therefore, limiting safety margins are determined.

Table 9.1A-21 demonstrates that the limiting safety margins for all sections are above 1.0 as required.

Table 9.1A-22 shows results of shear capacity calculations for the slab and walls. Calculated margins are again to be compared with an allowable margin of 1.0.

9.1A.4.4.4 Pool Liner

The pool liner is subject to in-plate strains due to movement of the rack support feet during the seismic event. Analyses are performed to establish that the liner will not tear or rupture under limiting loading conditions in the pool, and that there is no fatigue problem under the condition of 1 SSE event plus 20 OBE events. These analyses are based on loadings imparted from the most highly loaded pedestal in the pool assumed to be positioned in the most unfavorable position. Bearing strength requirements are shown to be satisfied by conservatively analyzing the most highly loaded pedestal located in the worst configuration with respect to underlying leak chases.

9.1A.4.4.5 Gamma Heating Considerations

The effect of gamma heating was evaluated along with the temperature differentials across the wall from normal and accident conditions. The concrete and rebar stresses were shown to be acceptable for all conditions. However, gamma heating produces concrete temperatures above 150°F under some short term conditions for the 36 inch thick wall along the south side of the Spent Fuel Pool. However, the excessive temperature will be of short duration due to the rapid reduction in gamma bombardment over the cooling period of the fuel.

Although temperatures in excess of the 150°F range are allowed by the ACI code, the effect from gamma heating can be remedied by storage of fuel with longer cooling time along the pool periphery.

Therefore, in lieu of performing additional evaluations to determine the acceptability of the gamma heating on the 36" thick wall, administrative controls are provided to ensure spent fuel is cooled at least one year prior to storage along the peripheral rack cells on the South end of the Spent Fuel Pool, or the peripheral rack cells on the North end of the Cask Loading Pool (i.e., in storage module cells adjacent to the 36" wall separating the two pools).

9.1A.4.4.6 Conclusions

Regions affected by loading the fuel pool completely with high density racks are examined for structural integrity under bending and shearing action. It has been determined that adequate safety margins exist assuming that all racks are fully loaded with a bounding fuel weight and that the factored load combinations are checked against the appropriate structural design strengths. It is also shown that local loading on the liner does not compromise liner integrity under a postulated fatigue condition and that concrete bearing strength limits are not exceeded.

9.1A.5 ADMINISTRATIVE CONTROL OF FUEL MOVEMENT AND STORAGE IN REGION 2 AND 3

Control of fuel movement in the plant and the placement of fuel in Region 2 and 3 of the Fuel Storage Pool is under strict administrative control. This control precludes the possibility of erroneous placement of fuel which has not attained the required burnup (see Figure 9.1A-3) in Region 2 or 3 of the Fuel Storage Pool.

Movement of spent fuel or fuel handling in the fuel storage pool with fuel storage present is carried out under the knowledge of a licensed operator and under supervision of personnel qualified to oversee fuel movement. Under other conditions, fuel movement on site is carried out by a trained operator. Detailed approved procedures are used which give step-by-step action for each fuel movement. When new fuel is received on site, a fuel status record is initiated for each fuel assembly which records the assembly movement throughout the plant including new fuel storage, spent fuel storage and reactor core locations. Material transfer reports are also completed which record, sequentially, each fuel assembly movement.

Fuel assembly identification numbers are positively identified when placed in the new fuel storage racks or fuel storage pool. During refueling, after core loading is complete, an inventory of fuel in the core is completed to verify that the core has been loaded in accordance with design documents. Additionally, when the fuel in the fuel storge pool is to be transferred into Region 2 or 3, SNM records are used to identify candidates for Region 2 or 3 storage.

Prior to the start of transfer of fuel to Region 2 or 3, the history of each fuel assembly to be transferred is reviewed and calculations are performed to determine the amount of burnup each assembly has received. Once it has been determined that a fuel assembly has attained the required burnup, it is added to the list of assemblies designated for movement to Region 2 or 3 of the pool. Following this verification, fuel from Region 1 may be transferred to Region 2 or 3.

Fuel is moved through the use of the spent fuel bridge crane described in Section 9.1.4.2.2 and shown in Figures 9.1-8 and 9.1-9.

To minimize the possibility of error, a specific fuel assembly from the approved listing is identified for movement along with its current storage location and planned storage location in Region 2 or 3. When the spent fuel bridge crane has been positioned above the fuel assembly, its number is verified. The assembly is then moved to its designated location in Region 2 or 3 of the pool.

This process is repeated until all fuel designated for relocation has been properly transferred to Region 2 or 3 of the pool.

In addition to these precautions and controls, physical inventories by comparing fuel assembly identification numbers with SNM records are implemented prior to each refueling outage which verifies fuel location in the new fuel storage racks and fuel storage pool.

These controls, procedures, checks and verifications ensure that the fuel stored in each location in Region 2 or 3 is the fuel that was designated for storage in that location and that the fuel has attained the required burnup.

9.1A.6 REFERENCES

1. Petrie and N. F. Landers, "KENO Va - An Improved Monte Carlo Criticality Program with Supergrouping," Volume 2, Section F11 from "SCALE: A Modular System for Performing Standardized Computer Analysis for Licensing Evaluation" NUREG/CR-0200, Rev. 4, January 1990.
2. J.F. Briesmeister, Editor, "MCNP - A General Monte Carlo N-Particle Transport Code, Version 4A," LA-12625, Los Alamos National Laboratory (1993).
3. N. M. Greene, L.M. Petrie and R.M. Westfall, 3. "NITAWLII: Scale System Module for Performing Shielding and Working Library Production," Volume 1, Section F1 from "SCALE: A Modular System for Performing Standardized Computer Analysis for Licensing Evaluation" NUREG/CR0200, Rev. 4, January 1990.
4. M.G. Natrella, Experimental Statistics, National Bureau of Standards Handbook 91, August 1963.
5. A. Ahlin, M. Edenius, and H. Haggblom, "CASMO -.A Fuel Assembly Burnup Program", AERF-76-4158, Studsvikreport.
6. A. Ahlin and M. Edenius, "CASMO - A Fast Transport Theory Depletion Code for LWR Analysis", ANS Transactions, Vol. 26, p. 604, 1977.
7. M. Edenius, A. Ahlin and B.H. Forssen, "CASMO-3 A Fuel Assembly Burnup Program User's Manual," Studsvik/NFA-86/7, Studsvik Energitechnik AB, November 1986.
8. S. E. Turner, "Waterford Criticality Analysis," HI-961562, 1996.
9. M. Edenius and A. Ahlin, "CASMO-3: New Features, Benchmarking, and Advanced Applications," *Nucl. Sci. Eng,* 100 (1988).
10. S. E. Turner, "Uncertainty Analysis - Burnup Distributions", presented at the DOE/SANDIA Technical Meeting on Fuel Burnup Credit, Special Session, ANS/ENS Conference, Washington, D.C., November 2, 1988.
11. General Design Criteria 62, Prevention of Criticality in Fuel Storage and Handling.
12. USNRC Standard Review Plan, NUREG-0800, Section 9.1.2, Spent Fuel Storage, Rev. 3 - July 1981.

13. USNRC letter of April 14, 1978, to all Power Reactor Licensees - OT Position for Review and Acceptance of Spent Fuel Storage and Handling Applications, including modification letter dated January 18, 1979.
14. USNRC Regulatory Guide 1.13, Spent Fuel Storage Facility Design Basis, Rev. 2 (proposed), December 1981.
15. ANSI ANS-8.17-1984, Criticality Safety Criteria for the Handling, Storage and Transportation of LWR Fuel Outside Reactors.
16. ANSI/ANS 8.1 (N16.1) - Nuclear Criticality Safety in Operations with Fissionable Materials Outside Reactors.
17. Briesmeister, Ed., "MCNP4a - A General Monte Carlo N-Particle Transport Code, Version 4A; Los Alamos National Laboratory, LA-12625-M (1993).
18. SCALE 4.3, "A Modular Code System for Performing Standardized Computer Analyses for Licensing Evaluation", NUREG-0200 (ORNL-NUREG-CSD-2/U2/R5, Revision 5, Oak Ridge National Laboratory, September 1995.
19. DeHart and S.M. Bowman, "Validation of the SCALE Broad Structure 44-G Group ENDF/B-Y Cross-Section Library for Use in Criticality Safety Analyses", NUREG/CR-6102 (ORNL/TM-12460) Oak Ridge National Laboratory, September 1994.
20. W.C. Jordan et al., "Validation of KENOV.a", CSD/TM-238, Martin Marietta Energy Systems, Inc., Oak Ridge National Laboratory, December 1986.
21. O.W. Hermann et al., "Validation of the Scale System for PWR Spent Fuel Isotopic Composition Analysis", ORNL-TM-12667, Oak Ridge National Laboratory, undated.
22. R.J. Larsen and M.L. Marx, An Introduction to Mathematical Statistics and its Applications, Prentice-Hall, 1986.
23. M. N. Baldwin et al., Critical Experiments Supporting Close Proximity Water Storage of Power Reactor Fuel, BAW- 1484-7, Babcock and Wilcox Company, July 1979.
24. G.S. Hoovier et al., Critical Experiments Supporting Underwater Storage of Tightly Packed Configurations of Spent Fuel Pins, BAW - 16454, Babcock & Wilcox Company, November 1991.
25. L.W. Newman et al., Urania Gadolinia: Nuclear Model Development and Critical Experiment Benchmark, BAW-1810, Babcock and Wilcox Company, April 1984.
26. J.C. Manaranche et al., "Dissolution and Storage Experimental Program with 4.75 w/o Enriched Uranium-Oxide Rods," Trans. Am. Nucl. Soc. 33: 362-364 (1979).
27. S.R. Bierman and E.D. Clayton, Criticality Experiments with Subcritical Clusters of 2.35 w/o and 4.31 w/o 235U Enriched UO2 Rods in Water with Steel Reflecting Walls, PNL-3602, Battelle Pacific Northwest Laboratory, April 1981.
28. S.R. Bierman et al., Criticality Experiments with Subcritical Clusters of 2.35 w/o and 4.31 w/o 235u Enriched UO2 Rods in Water with Uranium or Lead Reflecting Walls, PNL-3926, Battelle Pacific Northwest Laboratory, December, 1981.
29. Bierman et al., Critical Separation Between Subcritical Clusters of 4.31 w/o 235U Enriched UO2 Rods in Water with Fixed Neutron Poisons, PNL-2615, Battelle Pacific Northwest Laboratory, October 1977.
30. R. Bierman, Criticality Experiments with Neutron Flux Traps Containing Voids, PNL-7167, Battelle Pacific Northwest Laboratory, April 1990.
31. B.M. Durst et al., Critical Experiments with 4.31 wt % 235U Enriched UO_2 Rods in Highly Borated Water Lattices, PNL-4267, Battelle Pacific Northwest Laboratory, August 1982.
32. S.R. Bierman, Criticality Experiments with Fast Test Reactor Fuel Pins in Organic Moderator, PNL-5803, Battelle Pacific Northwest Laboratory, December 1981.
33. E.G. Taylor et al., Saxton Plutonium Program Critical Experiments for the Saxton Partial Plutonium Core, WCAP-3385-54, Westinghouse Electric Corp., Atomic Power Division, December 1965.

34. Natrella, Experimental Statistics, National Bureau of Standards, Handbook 91, August 1963.
35. Heat Loss to the Ambient from Spent Fuel Pools: Correlation of Theory with Experiment", Holtec Report HI-90477, Rev. 0, April 3, 1990.
36. "An Improved Correlation for Evaporation from Spent Fuel Pools", Holtec Report HI- 971664, Rev. 0.
37. Batchelor, G.K., "An Introduction to Fluid Dynamics", Cambridge University Press, 1967.
38. Hinze, J.O., "Turbulence", McGraw Hill Publishing Co., New York, NY, 1975.
39. Launder, B.E., and Spalding, D.B., "Lectures in Mathematical Models of Turbulence", Academic Press, London, 1972.
40. "QA Documentation and Validation of the FLUENT Version 4.32 CFD Analysis Program", Holtec Report HI-961444.
41. Rohsenow, N.M., and Hartnett, J.P., "Handbook of Heat Transfer", McGraw Hill Book Company, New York, 1973.
42. USNRC NUREG-0800, Standard Review Plan, June 1987.
43. (USNRC Office of Technology) "OT Position for Review and Acceptance of Spent Fuel Storage and Handling Applications", dated April 14, 1978, and January 18, 1979 amendment thereto.
44. Soler, A.I. and Singh, K.P., "Seismic Responses of Free Standing Fuel Rack Constructions to 3-D Motions", Nuclear Engineering and Design, Vol. 80, pp. 315-329 (1984).
45. Soler, A.I. and Singh, K.P., "Some Results from Simultaneous Seismic Simulations of All Racks in a Fuel Pool", INNM Spent Fuel Management Seminar X, January, 1993.
46. Singh, K.P. and Soler, A.I., "Seismic Qualification of Free Standing Nuclear Fuel Storage Racks - the Chin Shan Experience, Nuclear Engineering International, UK (March 1991).
47. Holtec Proprietary Report HI-961465 - WPMR Analysis User Manual for Pre&Post Processors & Solver, August, 1997.
48. USNRC Standard Review Plan, NUREG-0800 (Section 3.7.1, Rev. 2, 1989).
49. Holtec Proprietary Report HI-89364 - Verification and User's Manual for Computer Code GENEQ, January, 1990.
50. Rabinowicz, E., "Friction Coefficients of Water Lubricated Stainless Steels for a Spent Fuel Rack Facility," MIT, a report for Boston Edison Company, 1976.
51. Singh, K.P. and Soler, A.I., "Dynamic Coupling in a Closely Spaced Two-Body System Vibrating in Liquid Medium: The Case of Fuel Racks," 3rd International Conference on Nuclear Power Safety, Keswick, England, May 1982.
52. Fritz, R.J., "The Effects of Liquids on the Dynamic Motions of Immersed Solids," Journal of Engineering for Industry, Trans. of the ASME, February 1972, pp 167-172.
53. Levy, S. and Wilkinson, J.P.D., "The Component Element Method in Dynamics with Application to Earthquake and Vehicle Engineering," McGraw Hill, 1976.
54. Paul, B., "Fluid Coupling in Fuel Racks: Correlation of Theory and Experiment", (Proprietary), NUSCO/Holtec Report HI-88243.
55. ASME Boiler & Pressure Vessel Code, Section III, Subsection NF, 1989 Edition.
56. ASME Boiler & Pressure Vessel Code, Section III, Appendices, 1989 Edition.
57. USNRC Standard Review Plan, NUREG-0800 (Section 3.8.4, Rev. 2, 1989).
58. ACI 349-85, Code Requirements for Nuclear Safety Related Concrete Structures, American Concrete Institute, Detroit, Michigan, 1985.
59. ACI 318-71, Building Code requirements for Structural Concrete.
60. R. W. Westfall and J. H. Knight, "SCALE System Cross-Section Validation with Shipping Cask Critical Experiments", ANS Transactions, Vol. 33, p. 368, November 1979.

61. Scavuzzo, R. J., Stokey, W. F., and Radke, E. F., "Dynamic Fluid-Structure Coupling of Rectangular Modules in Rectangular Pools", ASME Special Publication, Dynamics at Fluid-Structure Systems in the Energy Industry, PVP-39 June, 1979, pp. 77-86.
62. Specification C-175, "Technical Specification for Purchase of Spent Fuel Storage Racks for the Standardized Nuclear Unit Power Plant System (SNUPPS)", Appendix B.
63. OT Position for Review and Acceptance of Spent Fuel Handling Applications, by B.K. Grimes, USNRC, Washington, D.C., April 14, 1978.
64. NUREG-0800, SRP-3.8.4, Rev. 1., July 1981.
65. ACI 349-85, Code Requirements for Nuclear Safety Related Concrete Structures, American Concrete Institute, Detroit Michigan.
66. "Nuclear Reactors and Earthquakes, U.S. Department of Commerce, National Bureau of Standards, National Technical Information Service, Springfield, Virginia (TID 7024).
67. STARDYNE User's Manual, Research Engineers, Inc., Rev. 4.4.

Table 9.1A-1

Summary of the Criticality Safety Analysis for the MZTR Storage Configuration

Design Basis Burnups at 5.0 ± 0.05 wt% ^{235}U initial enrichment	0 in Region 1 50 in Region 2 40.75 in Region 3
Temperature for Analysis	20°C
Uncertainties	
Manufacturing tolerances (Table 4.5.1)	± 0.0059
Water-gap (horizontal)	± 0.0014
Water-gap (vertical)	± 0.0003
Burnup (Region 2)	± 0.0056
Burnup (Region 3)	± 0.0001
Eccentricity in position	negative
KENO5a statistics (95%/95%)	± 0.0003
Bias statistics (95%/95%)	± 0.0012
Statistical combination of uncertainties*	± 0.0084

Region 1 Fuel Description	5.0 wt% ^{235}U with 16 IFBA rods	4.6 wt% ^{235}U with no IFBA rods
Reference k_{eff} (KENO5a)	0.9266	0.9294
Total Uncertainty (above)	0.0084	0.0084
Calculational Bias (see Appendix A)	0.0030	0.0030
Axial Burnup Effect	negative	negative
Temperature Correction to 4°C (39°F)	0.0020	0.0020
Maximum k_{eff}	**0.9400**	**0.9428**
Limiting k_{eff}	**0.9500**	**0.9500**

* Square root of the sum of the squares.

Table 9.1A-2

Summary of the Criticality Safety Analysis for the Interim Checkerboard Storage Configuration

Temperature for Analysis		20°C
Uncertainties		
Manufacturing tolerances (Table 4.5.1)	± 0.0059	
Water-gap (horizontal)	± 0.0014	
Water-gap (vertical)	± 0.0003	
Burnup (Region 2)	N/A	
Burnup (Region 3)	N/A	
Eccentricity in position	negative	
KENO5a statistics (95%/95%)	± 0.0004	
Bias statistics (95%/95%)	± 0.0012	
Statistical combination of uncertainties*	± 0.0062	

Fuel Description	5.0 wt% ^{235}U with 16 IFBA rods	4.6 wt% ^{235}U with no IFBA rods
Reference k_{eff} (KENO5a)	0.8439	0.8490
Total Uncertainty (above)	0.0062	0.0062
Calculational Bias (see Appendix A)	0.0030	0.0030
Axial Burnup Effect	negative	negative
Temperature Correction to 4°C (39°F)	0.0020	0.0020
Maximum k_{eff}	**0.8551**	**0.8602**
Limiting k_{eff}	**0.9500**	**0.9500**

* Square root of the sum of the squares.

Table 9.1A-3

Reactivity Effects of Abnormal and Accident Conditions

Abnormal/Accident Conditions	Reactivity Effect
Temperature Increase (above 4°C)	Negative (Table 9.1A-6)
Void (boiling)	Negative (Table 9.1A-6)
Assembly Drop (on top of rack)	Negligible
Assembly Drop (adjacent to rack)	Positive - controlled by < 500 ppm soluble boron
Lateral Rack Movement	Included in Tolerances
Misplacement of a fresh fuel assembly	Positive - controlled by 500 ppm soluble boron
Multiple misplaced fuel assemblies	Positive - controlled by 2165 ppm soluble boron

Table 9.1A-4

Design Basis Fuel Assembly Specifications

Fuel Rod Data			
Assembly type	**OFA**	**Standard**	**Vantage-5H**
Fuel pellet outside diameter, in.	0.3088	0.3225	0.3225
Cladding thickness, in.	0.0225	0.0225	0.0225
Cladding outside diameter, in.	0.360	0.374	0.374
Cladding material	Zr	Zr	Zr
Pellet density, % T.D.	95.0	95.0	95.0
Maximum nominal enrichment, wt% ^{235}U	5.0	5.0	5.0
Fuel Assembly Data			
Fuel rod array	**17 x 17**	**17 x 17**	**17 x 17**
Number of fuel rods	264	264	264
Fuel rod pitch, in.	0.496	0.496	0.496
Number of control rod guide and instrument thimbles	25	25	25
Thimble outside diameter, in.	0.474	0.482	0.474
Thimble thickness, in.	0.016	0.016	0.016
Number of IFBA rods	16	16	16
Active fuel Length, in.	144	144	144

Table 9.1A-5

Reactivity Effects of Manufacturing Tolerances

Tolerance	**Reactivity Effect, Δk**
Minimum boral loading (0.03 g/cm^2, 0.0324 g/cm^2 nominal)	± 0.0044
Minimum boral width (7.4375”, 7.5” nominal)	± 0.0010
Minimum box I.D. (8.73”, 8.77” nominal)	± 0.0016
Maximum SS thickness (0.079”, 0.075” nominal)	± 0.0002
Density tolerance (10.61 g/cm^3, 10.41 g/cm^3 nominal)	± 0.0019
Enrichment tolerance (5.05%, 5.0% nominal)	± 0.0023
Total (statistical sum)*	**± 0.0059**

* Square root of the sum of the squares

Table 9.1A-6

Reactivity Effects of Temperature and Void

	Reactivity Effect, Δk		
Case	**Region 1 (Fresh fuel)**	**Region 2 (50 MWd/kgU)**	**Region 3 (40.75 MWd/kgU)**
4°C (39°F)	reference	reference	reference
20°C (68°F)	-0.002	-0.0036	-0.0034
60°C (140°F)	-0.0095	-0.0137	-0.0134
120°C (248°F)	-0.0252	-0.0314	-0.0313
120°C w/ 10% void	-0.0496	-0.0484	-0.0501

Table 9.1A-7

Summary of Criticality Benchmark Calculations

	Reference	Identification	Enrich.	Calculated k_{eff} ±1σ		EALF† (eV)	
				MCNP4a	KENO5a	MCNP4a	KENO5a
1	B&W-1484 (Ref. 23)	Core I	2.46	0.9964 ± 0.0010	0.9898 ± 0.0006	0.17589	0.1753
2	B&W-1484(Ref. 23)	Core II	2.46	1.0008 ± 0.0011	1.0015 ± 0.0005	0.2553	0.2446
3	B&W-1484 (Ref. 23)	Core III	2.46	1.0010 ± 0.0012	1.0005 ± 0.0005	0.1999	0.1939
4	B&W-1484 (Ref. 23)	Core IX	2.46	0.9956 ± 0.0012	0.9901 ± 0.0006	0.1422	0.1426
5	B&W-1484 (Ref. 23)	Core X	2.46	0.9980 ± 0.0014	0.9922 ± 0.0006	0.1513	0.1499
6	B&W-1484 (Ref. 23)	Core XI	2.46	0.9978 ± 0.0012	1.0005 ± 0.0005	0.2031	0.1947
7	B&W-1484 (Ref. 23)	Core XII	2.46	0.9988 ± 0.0011	0.9978 ± 0.0006	0.1718	0.1662
8	B&W-1484 (Ref. 23)	Core XIII	2.46	1.0020 ± 0.0010	0.9952 ± 0.0006	0.1988	0.1965
9	B&W-1484 (Ref. 23)	Core XIV	2.46	0.9953 ± 0.0011	0.9928 ± 0.0006	0.2022	0.1986
10	B&W-1484 (Ref. 23)	Core XV	2.46	0.9910 ± 0.0011	0.9909 ± 0.0006	0.2092	0.2014
11	B&W-1484 (Ref. 23)	Core XVI	2.46	0.9935 ± 0.0010	0.9889 ± 0.0006	0.1757	0.1713
12	B&W-1484 (Ref. 23)	Core XVII	2.46	0.9962 ± 0.0012	0.9942 ± 0.0005	0.2083	0.2021
13	B&W-1484 (Ref. 23)	Core XVIII	2.46	10.36 ± 0.0012	0.99310± 0.0006	0.1705	0.1708
14	B&W-1484 (Ref. 23)	Core XIX	2.46	0.9961 ±0.0012	0.9971 ± 0.0005	0.2103	0.2011
15	B&W-1484 (Ref. 23)	Core XX	2.46	1.0008 ± 0.0011	0.9932 ± 0.0006	0.1724	0.1701
16	B&W-1484 (Ref. 23)	Core XXI	2.46	0.9994 ± 0.0010	0.9918 ± 0.0006	0.1544	0.1536
17	B&W-1645 (Ref. 24)	S-Type Fuel, w/886 ppm B	2.46	0.9970 ± 0.0010	0.9924 ± 0.0006	1.4475	1.4680
18	B&W-1645 (Ref. 24)	S-Type Fuel, w/746 ppm B	2.46	0.9990 ± 0.0010	0.9913 ± 0.0006	1.5463	1.5660

Table 9.1A-7 (sheet 2)

19	B&W-1645 (Ref. 24)	SO-Type Fuel, w/1156 ppm B	2.46	0.9972 ± 0.0009	0.9949 ± 0.0005	0.4241	0.4331
20	B&W-1810 (Ref. 25)	Case 1 1337 ppm B	2.46	1.0023 ± 0.0010	NC	0.1531	NC
21	B&W-1810 (Ref. 25)	Case 12 1899 ppm B	2.46/4.02	1.0060 ± 0.0009	NC	0.4493	NC
22	French (Ref. 26)	Water Moderator 0 gap	4.75	0.9966 ± 0.0013	NC	0.2172	NC
23	French (Ref. 26)	Water Moderator 2.5 cm gap	4.75	0.9952 ± 0.0012	NC	0.1778	NC
24	French (Ref. 26)	Water Moderator 5 cm gap	4.75	0.9943 ± 0.0010	NC	0.1677	NC
25	French (Ref. 26)	Water Moderator 10 cm gap	4.75	0.9979 ± 0.0010	NC	0.1736	NC
26	PNL-3602 (Ref. 27)	Steel Reflector, 0 separation	2.35	NC	1.0004 ± 0.0006	NC	0.1018
27	PNL-3602 (Ref. 27)	Steel Reflector, 1.321 cm sepn.	2.35	0.9980 ± 0.0009	0.9992 ±0.0006	0.1000	0.0909
28	PNL-3602 (Ref. 27)	Steel Reflector, 2.616 cm sepn.	2.35	0.9968 ± 0.0009	0.99640± 0.0006	0.0981	0.0975
29	PNL-3602 (Ref. 27)	Steel Reflector, 3.912 cm sepn.	2.35	0.9974 ± 0.0010	0.9980 ± 0.0006	0.0976	0.0970
30	PNL-3602 (Ref. 27)	Steel Reflector, infinite sepn.	2.35	0.9962 ± 0.0008	0.9939 ± 0.0006	0.0973	0.0968
31	PNL-3602 (Ref. 27)	Steel Reflector, 0 sepn.	4.306	NC	1.0003 ± 0.0007	NC	0.3282
32	PNL-3602 (Ref. 27)	Steel Reflector, 0.312 cm sepn.	4.306	0.9997 ± 0.0010	1.0012 ± 0.0007	0.3016	0.3039
33	PNL-3602 (Ref. 27)	Steel Reflector, 2.616 cm sepn.	4.306	0.9994 ± 0.0012	0.9974 ± 0.0007	0.2911	0.2927
34	PNL-3602 (Ref. 27)	Steel Reflector, 5.405 cm sepn.	4.306	0.9969 ± 0.0011	0.9951 ± 0.0007	0.2825	0.2860
35	PNL-3602 (Ref. 27)	Steel Reflector, infinite sepn. ††	4.306	0.9910 ± 0.0020	0.9947 ± 0.0007	0.2851	0.2864
36	PNL-3602 (Ref. 27)	Steel Reflector, with Boral Sheets	4.306	0.9941 ± 0.0011	0.9970 ± 0.0007	0.3135	0.3150
37	PNL-3926 (Ref. 28)	Lead Reflector, 0 cm sepn.	4.306	NC	1.0003 ± 0.0007	NC	0.3159
38	PNL-3926 (Ref. 28)	Lead Reflector, 0.55 cm sepn.	4.306	1.0025 ± 0.0011	0.9997 ± 0.0007	0.3030	0.3044
39	PNL-3926 (Ref. 28)	Lead Reflector, 1.956 cm sepn.	4.306	1.0000 ± 0.0012	0.9985 ± 0.0007	0.2883	0.2930
40	PNL-3926 (Ref. 28)	Lead Reflector, 5.405 cm sepn.	4.306	0.9971 ± 0.0012	0.9946 ± 0.0007	0.2831	0.2854

Table 9.1A-7 (sheet 3)

41	PNL-2615 (Ref. 29)	Experiment 004/0.3 - no absorber	4.306	0.9925 ± 0.0012	0.9950 ± 0.0007	0.1155	0.1159
42	PNL-2615 (Ref. 29)	Experiment 030 - Zr plates	4.306	NC	0.9971 ± 0.0007	NC	0.1154
43	PNL-2615 (Ref. 29)	Experiment 013 - Steel plates	4.306	NC	0.9965 ± 0.0007	NC	0.1164
44	PNL-2615 (Ref. 29)	Experiment 014 - Steel plates	4.306	NC	0.9972 ± 0.0007	NC	0.1164
45	PNL-2615 (Ref. 29)	Exp. 009 1.05% Boron-Steel plates	4.306	0.9982 ± 0.0010	0.9981 ± 0.0007	0.1172	0.1162
46	PNL-2615 (Ref. 29)	Exp. 012 1.62% Boron-Steel plates	4.306	0.9996 ± 0.0012	0.9982 ± 0.0007	0.1161	0.1173
47	PNL-2615 (Ref. 29)	Exp. 031 - Boral plates	4.306	0.9994 ± 0.0012	0.9969 ± 0.0007	0.1165	0.1171
48	PNL-7167 (Ref. 30)	Experiment 214R - with flux trap	4.306	0.9991 ± 0.0011	0.9956 ± 0.0007	0.3722	0.3812
49	PNL-7167 (Ref. 30)	Experiment 214V3 - with flux trap	4.306	0.9969 ± 0.0011	0.9963 ± 0.0007	0.3742	0.3826
50	PNL-4267 (Ref. 31)	Case 173 - 0 ppm B	4.306	0.9974 ± 0.0012	NC	0.2893	NC
51	PNL-4267 (Ref. 31)	Case 177 - 2550 ppm B	4.306	1.0057 ± 0.0010	NC	0.5509	NC
52	PNL-5803 (Ref. 32)	MOX Fuel - Type 3.2 Exp. 21	20% Pu	1.0041 ± 0.0011	1.0046 ± 0.0006	0.9171	0.8868
53	PNL-5803 (Ref. 32)	MOX Fuel - Type 3.2 Exp. 43	20% Pu	1.0058 ± 0.0012	1.0036 ± 0.0006	0.2968	0.2944
54	PNL-5803 (Ref. 32)	MOX Fuel - Type 3.2 Exp. 13	20% Pu	1.0083 ± 0.0011	0.9989 ± 0.0006	0.1665	0.1706
55	PNL-5803 (Ref. 32)	MOX Fuel - Type 3.2 Exp. 32	20% Pu	1.0079 ± 0.0011	0.9966 ± 0.0006	0.1139	0.1165
56	WCAP -3385 (Ref. 33)	Saxton Case 52 PuO2 0.52” pitch	6.6% Pu	0.9996 ± 0.0011	1.0005 ± 0.0006	0.8665	0.8417
57	WCAP -3385 (Ref. 33)	Saxton Case 52 U 0.52” pitch	5.74	1.0000 ± 0.0010	0.9956 ± 0.0007	0.4476	0.4580
58	WCAP -3385 (Ref. 33)	Saxton Case 56 PuO2 0.56” pitch	6.6% Pu	1.0036 ± 0.0011	1.0047 ± 0.0006	0.5289	0.5197
59	WCAP -3385 (Ref. 33)	Saxton Case 56 borated PuO2	6.6% Pu	1.0008 ± 0.0010	NC	0.6389	NC

Table 9.1A-7 (sheet 4)

60	WCAP -3385 (Ref. 33)	Saxton Case 56 U 0.56” pitch	5.74	0.9994 ± 0.0011	0.9967 ± 0.0007	0.2923	0.2954
61	WCAP -3385 (Ref. 33)	Saxton Case 79 PuO2 0.79” pitch	6.6% Pu	1.0063 ± 0.0011	1.0133 ± 0.0006	0.1520	0.1555
62	WCAP -3385 (Ref. 33)	Saxton Case 79 U 0.79” pitch	5.74	1.0039 ± 0.0011	1.0008 ± 0.0006	0.1036	0.1047

Notes: NC stands for not calculated.

† EALF is the energy of the average lethargy causing fission.

†† These experimental results appear to be statistical outliers (>3σ) suggesting the possibility of unusually large experimental error. Although they could justifiably be excluded, for conservatism, they were retained in determining the calculational basis.

Table 9.1A-8

Comparison of MCNP4a and KENO5a Calculated Reactivities[†] for Various Enrichments

Enrichment	Calculated $k_{eff} \pm 1\sigma$	
	MCNP4a	**KENO5a**
3.0	0.8465 ± 0.0011	0.8478 ± 0.0004
3.5	0.8820 ± 0.0011	0.8841 ± 0.0004
3.75	0.9019 ± 0.0011	0.8987 ± 0.0004
4.0	0.9132 ± 0.0010	0.9140 ± 0.0004
4.2	0.9276 ± 0.0011	0.9237 ± 0.0004
4.5	0.9400 ± 0.0011	0.9388 ± 0.0004

[†] Based on the GE 8x8R fuel assembly

Table 9.1A-9

MCNP4a CALCULATED REACTIVITIES FOR
CRITICAL EXPERIMENTS WITH NEUTRON ABSORBERS

Ref.	**Experiment**		**Δk Worth of Absorber**	**MCNP4a Calculated k_{eff} ± 1σ**	**EALF[†] (eV)**
29	PNL-2615	Boral Sheet	0.0139	0.9994 ± 0.0012	0.1165
23	B&W-1484	Core XX	0.0165	1.0008 ± 0.0011	0.1724
29	PNL-2615	1.62% Boron-steel	0.0165	0.9996 ± 0.0012	0.1161
23	B&W-1484	Core XIX	0.0202	0.9961 ± 0.0012	0.2103
23	B&W-1484	Core XXI	0.0243	0.9994 ± 0.0010	0.1544
23	B&W-1484	Core XVII	0.0519	0.9962 ± 0.0012	0.2083
27	PNL-3602	Boral Sheet	0.0708	0.9941 ± 0.0011	0.3135
23	B&W-1484	Core XV	0.0786	0.9910 ± 0.0011	0.02092
23	B&W-1484	Core XVI	0.0845	0.9935 ± 0.0010	0.1751
23	B&W-1484	Core XIV	0.1575	0.9953 ± 0.0011	0.2022
23	B&W-1484	Core XIII	0.1738	1.0020 ± 0.0011	0.1988
30	PNL-7167	Expt 214R flux trap	0.1931	0.9991 ± 0.0011	0.3722

[†]EALF is the energy of the average lethargy causing fission.

Table 9.1A-10

COMPARISON OF MCNP4a and KENO5a
CALCULATED REACTIVITIES† for VARIOUS ^{10}B LOADINGS

	Calculated k_{eff} ± 1σ	
^{10}B, g/cm^2	**MCNP4a**	**KENO5a**
0.005	1.0381 ± 0.0012	1.0340 ± 0.0004
0.010	0.9960 ± 0.0010	0.9941 ± 0.0004
0.015	0.9727 ± 0.0009	0.9713 ± 0.0004
0.020	0.9541 ± 0.0012	0.9560 ± 0.0004
0.025	0.9433 ± 0.0011	0.9428 ± 0.0004
0.03	0.9325 ± 0.0011	0.9338 ± 0.0004
0.035	0.9234 ± 0.0011	0.9251 ± 0.0004
0.04	0.9173 ± 0.0011	0.9179 ± 0.0004

† Based on a 4.5% enriched GE 8x8R fuel assembly

Table 9.1A-11

CALCULATIONS FOR CRITICAL EXPERIMENTS WITH THICK LEAD AND STEEL REFLECTORS†

Ref.	Case	E, wt%	Separation, cm	MCNP4a $k_{eff} \pm 1\sigma$	KENO5a $k_{eff} \pm 1\sigma$
27	Steel Reflector	2.35	1.321	0.9980 ± 0.0009	0.9992 ± 0.0006
		2.35	2.616	0.9968 ± 0.0009	0.9964 ± 0.0006
		2.35	3.912	0.9974 ± 0.0010	0.9980 ± 0.0006
		2.35	∞	0.9962 ± 0.0008	0.9939 ± 0.0006
27	Steel Reflector	4.306	1.321	0.9997 ± 0.0010	1.0012 ± 0.007
		4.306	2.616	0.9994 ± 0.0012	0.9974 ± 0.0007
		4.306	3.405	0.9969 ± 0.0011	0.9951 ± 0.0007
		4.306	∞	0.9910 ± 0.0020	0.9947 ± 0.0007
28	Lead Reflector	4.306	0.55	1.0025 ± 0.0011	0.9997 ± 0.0007
		4.306	1.956	1.0000 ± 0.0012	0.9985 ± 0.0007
		4.306	5.405	0.9971 ± 0.0012	0.9946 ± 0.0007

† Arranged in order of increasing reflector-fuel spacing.

Table 9.1A-12

CALCULATIONS FOR CRITICAL EXPERIMENTS WITH VARIOUS SOLUBLE BORON CONCENTRATIONS

Reference	Experiment	Boron Concentration, ppm	Calculated $k_{eff} \pm 1\sigma$	
			MCNP4a	KWNO4a
31	PNL-4267	0	0.9974 ± 0.0012	-
24	B&W-1645	886	0.9970 ± 0.0010	0.9924 ± 0.0006
25	B&W-1810	1337	1.0023 ± 0.0010	-
25	B&W-1810	1899	1.0060 ± 0.0009	-
31	PNL-4267	2550	1.0057 ± 0.0010	-

Table 9.1A-13

CALCULATIONS FOR CRITICAL EXPERIMENTS WITH MOX FUEL

Reference	Case+	MCNP4a		KENO5a	
		$k_{eff} \pm 1\sigma$	EALF++	$k_{eff} \pm 1\sigma$	EALF++
PNL-5803 (Ref. 32)	MOX Fuel - Exp. No. 21	1.0041 ± 0.0011	0.9171	1.0046 ± 0.0006	0.8868
	MOX Fuel - Exp. No. 43	1.0058 ± 0.0012	0.2968	1.0036 ± 0.0006	0.2944
	MOX Fuel - Exp. No. 13	1.0083 ± 0.0011	0.1665	0.9989 ± 0.0006	0.1706
	MOX Fuel - Exp. No. 32	1.0079 ± 0.0011	0.1139	0.9966 ± 0.0006	0.1165
WCAP-3385-54 (Ref. 33)	Saxton @ 0.52″ pitch	0.9996 ± 0.0011	0.8865	1.0005 ± 0.0006	0.8417
	Saxton @ 0.56″ pitch	1.0036 ± 0.0011	0.5289	1.0047 ± 0.0006	0.5197
	Saxton @ 0.56″ pitch borated	1.0008 ± 0.0010	0.6389	NC	NC
	Saxton @ 0.79″ pitch	1.0063 ± 0.0011	0.1520	1.0133 ± 0.0006	0.1555

Note: NC stands for not calculated

+ = Arranged in order of increasing lattice spacing

++ = EALF is the energy of the average lethargy causing fission.

Table 9.1A-14

DATA FOR DECAY HEAT LOAD LIMIT EVALUATION

Length of Spent Fuel Pool (min.)	597.56 inch
Width of Spent Fuel Pool (min.)	339 inch
Pool Building Ambient Temperature	110°F
Emissivity of Water	0.96
Specific Heat of Water	0.998 Btu/lb. x °F
HX Temperature Effectiveness	0.48981 (partial core) 0.3116 (full core)
Coolant Water Inlet Temperature	105°F 130°F (post LOCA)
Coolant Water Flow Rate	1.50×10^6 lb/hr (partial core) 0.75×10^6 lb/hr (post LOCA) 3.00×10^6 lb/hr (full core)*

*For practical purpose, it is acceptable to use one train of the CCW cooling with a normal CCW flow rate of 1.50×10^6 lb/hr (i.e., 3000 gpm) as long as the calculated maximum bulk pool temperature of 170°F would not be exceeded during the full core offload process. A fuel storage pool cooling calculation, with consideration of the planned outage schedule including the timing for commencement and completion of the core offload, will be performed on a cycle specific basis to confirm the acceptability of the normal CCW flow rate.

Table 9.1A-15

DATA FOR TIME-TO-BOIL EVALUATION

Length of Spent Fuel Pool	597.56 inch
Width of Spent Fuel Pool	339 inch
Depth of Spent Fuel Pool	37.25 ft.
Total Fuel Rack Weight	411,320 lb.
Number of Fuel Assemblies	2,642 assemblies
Bounding Assembly Weight	1,467 lb.
Pool Building Ambient Temperature	110°F
Emissivity of Water	0.96
Pool Thermal Capacity	3.144×10^6 Btu/°F
Specific Heat of Water	0.998 Btu/(lb. x °F)

Table 9.1A-16

DATA FOR LOCAL TEMPERATURE EVALUATION

Bounding Assembly Weight	1467 lb
Maximum Fuel Assembly Heat Flux	1870 Btu/hr-ft^2
Radial Peaking Factor	1.65
Total Peaking Factor	2.5
Number of Fuel Assemblies	2642
SFPCCS Water Flow Rate	1.625×10^6 lb/hr
Type of fuel assembly	Westinghouse 17×17 Std.
Fuel Rod Outer Diameter	0.374 in
Rack Cell Inner Dimension	8.77 in
Active Fuel Length	144
Number of Fuel Rods per Assembly*	289 rods
Rack Cell Length	169 in
Minimum Bottom Plenum Height	5 in

* Note: Fuel assembly is modeled as a square array with all locations containing fuel rods.

TABLE 9.1A-17

RESULTS OF DECAY HEAT LOAD LIMIT EVALUATION

Scenario	Number of SFPCCS Trains	Maximum Bulk Temperature	Maximum Decay Heat Load Limit (Btu/hr x 10^6)	Required Makeup Water Volume (gpm)
Partial- core offload	1	140°F (limit)	27.15	1.80
Full-core offload	1	170°F (calculated)	63.41	5.57

Table 9.1A-18

RACK MATERIAL DATA (200°F)
(ASME - Section II, Part D)

RACK MATERIAL DATA (200°F) (ASME - Section II, Part D)			
Material	**Young's Modulus** **E** **(psi)**	**Yield Strength** **S_y** **(psi)**	**Ultimate Strength** **Su** **(psi)**
SA240; 304L S.S.	27.6×10^6	21,300	66,200
SUPPORT MATERIAL DATA (200°F)			
SA240, Type 304L (upper part of support feet)	27.6×10^6	21,300	66,200
SA-564-630 (lower part of support feet; age hardened at 1100°F)	28.5×10^6	106,300	140,000

Table 9.1A-19

TIME HISTORY STATISTICAL CORRELATION RESULTS

TIME-HISTORY STATISTICAL CORRELATION RESULTS	
OBE	
Data1 to Data2	0.0793
Data1 to Data3	0.0174
Data2 to Data3	0.0464
DBE	
Data1 to Data2	0.0061
Data1 to Data3	0.0127
Data2 to Data3	0.0874

Data1 corresponds to the time-history acceleration values along the **X axis (North)**

Data2 corresponds to the time-history acceleration values along the **Y axis (West)**

Data3 corresponds to the time-history acceleration values along the **Z axis (Vertical)**

Table 9.1A-20

COMPARISON OF BOUNDING CALCULATED LOADS/STRESSES

VS.

CODE ALLOWABLES AT IMPACT LOCATIONS AND AT WELDS

	OBE		SSE	
Item/Location	**Calculated**	**Allowable**	**Calculated**	**Allowable**
Fuel assembly/cell wall impact, lbf.	403	3,404†	840	3,404
Rack/baseplate weld, psi	12,111	19,860	22,514	35,748
Female pedestal/baseplate weld, psi	8,099	19,860	21,617	35,748
Cell/cell welds, lbf.	1,140††	3,195	2,546	5,751

† Based on the limit load for a cell wall. The allowable load on the fuel assembly itself may be less than this value but is greater than 840 lbs

†† Based on the fuel assembly to cell wall impact load simultaneously applied in two orthogonal directions.

Table 9.1A-21

SHEAR STRENGTH EVALUATION

Location	Limiting Safety Margin	Critical Load Combinations (see Section 9.1A.4.3.4.6)
CP + SFP East Wall	1.07	SC1 (12)
SFP West Wall	3.61	SC2 (13)
SFP North Wall	3.23	SC1 (12)
CP North + SFP South Wall	3.43	SC2 (13)
Cask Loading Pit West Wall	1.49	SC1 (13)
Cask Loading Pit South Wall	2.40	SC1 (13)

Note: SC1 corresponds to the condition SFP and CP full of water and SC2 corresponds to the condition SFP full and CP empty.

Table 9.1A-22

Bending Strength Evaluation

Location	Limiting Safety Margin	Critical Load Combinations (see Section 9.1A.4.3.4.6)
CP + SFP East Wall	1.07	SC1 (12)
SFP West Wall	3.61	SC2 (13)
SFP North Wall	3.23	SC1 (12)
CP North + SFP South Wall	3.43	SC2 (13)
Cask Loading Pit West Wall	1.49	SC1 (13)
Cask Loading Pit South Wall	2.40	SC1 (13)

Note: SC1 corresponds to the condition SFP and CP full of water and SC2 corresponds to the condition SFP full and CP empty.

Region 1	Region 2	Region 3	Region 3	Reg. 3
Region 2	Region 2	Region 3	Region 3	Reg. 3
Region 1	Region 2	Region 3	Region 3	Reg. 3
Region 2	Region 2	Region 2	Region 2	Reg. 2
Region 1	Region 2	Region 1	Region 2	Reg. 1
Region 2	Region 2	Region 1	Region 2	Reg. 1
Region 1	Region 2	Region 2	Region 2	Reg. 2
Region 2	Region 2	Region 3	Region 3	Reg. 3
Region 1	Region 2	Region 3	Region 3	Reg. 3
Region 2	Region 2	Region 3	Region 3	Reg. 3

FIGURE 9.1A-1
REPRESENTATION OF THE KENO5a
REFERENCE MZTR CALCULATIONAL MODEL

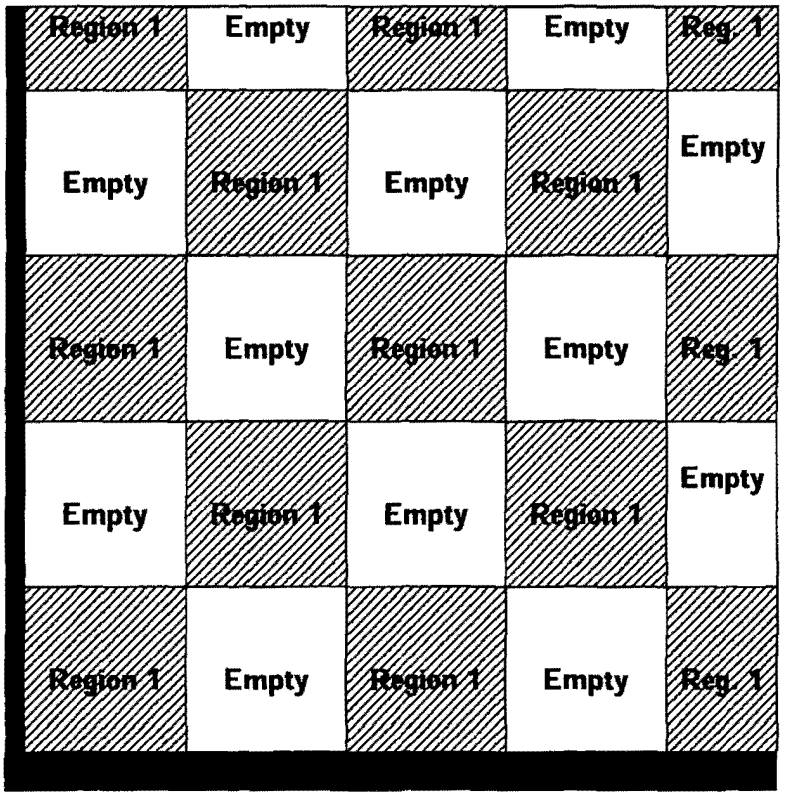

Rev. 14

WOLF CREEK
UPDATED SAFETY ANALYSIS REPORT

FIGURE 9.1A-2
REPRESENTATION OF THE KENO5a
REFERENCE CHECKERBOARD
CALCULATIONAL MODEL

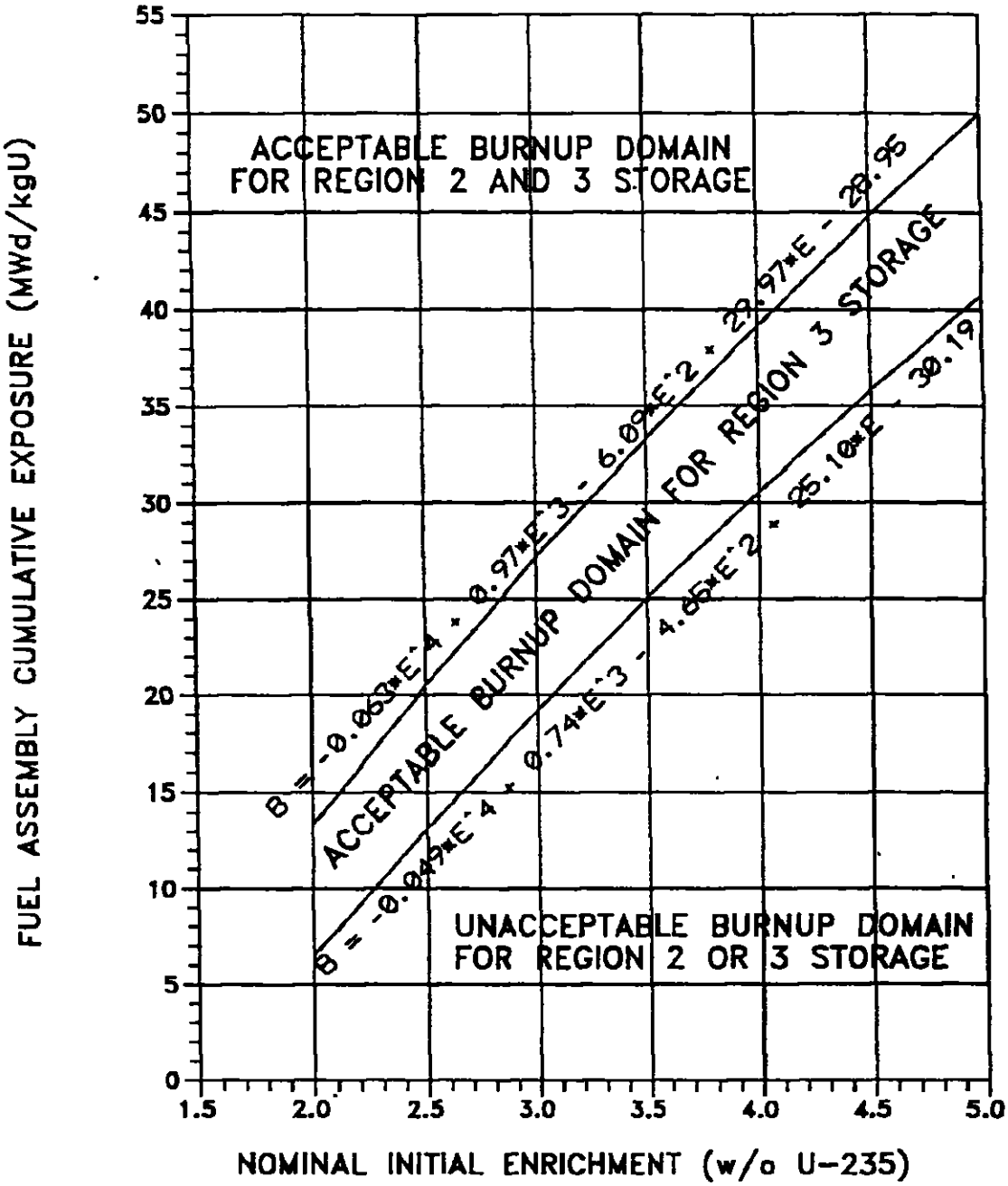

Minimum Required Fuel Assembly Burnup as a Function of Nominal Initial Enrichment to Permit Storage in Regions 2 and 3 (Fuel assemblies with enrichments less than 2.0 wt% ^{235}U will conservatively be required to meet the burnup requirements of 2.0 wt% ^{235}U assemblies).

WOLF CREEK UPDATED SAFETY ANALYSIS REPORT
FIGURE 9.1A-3

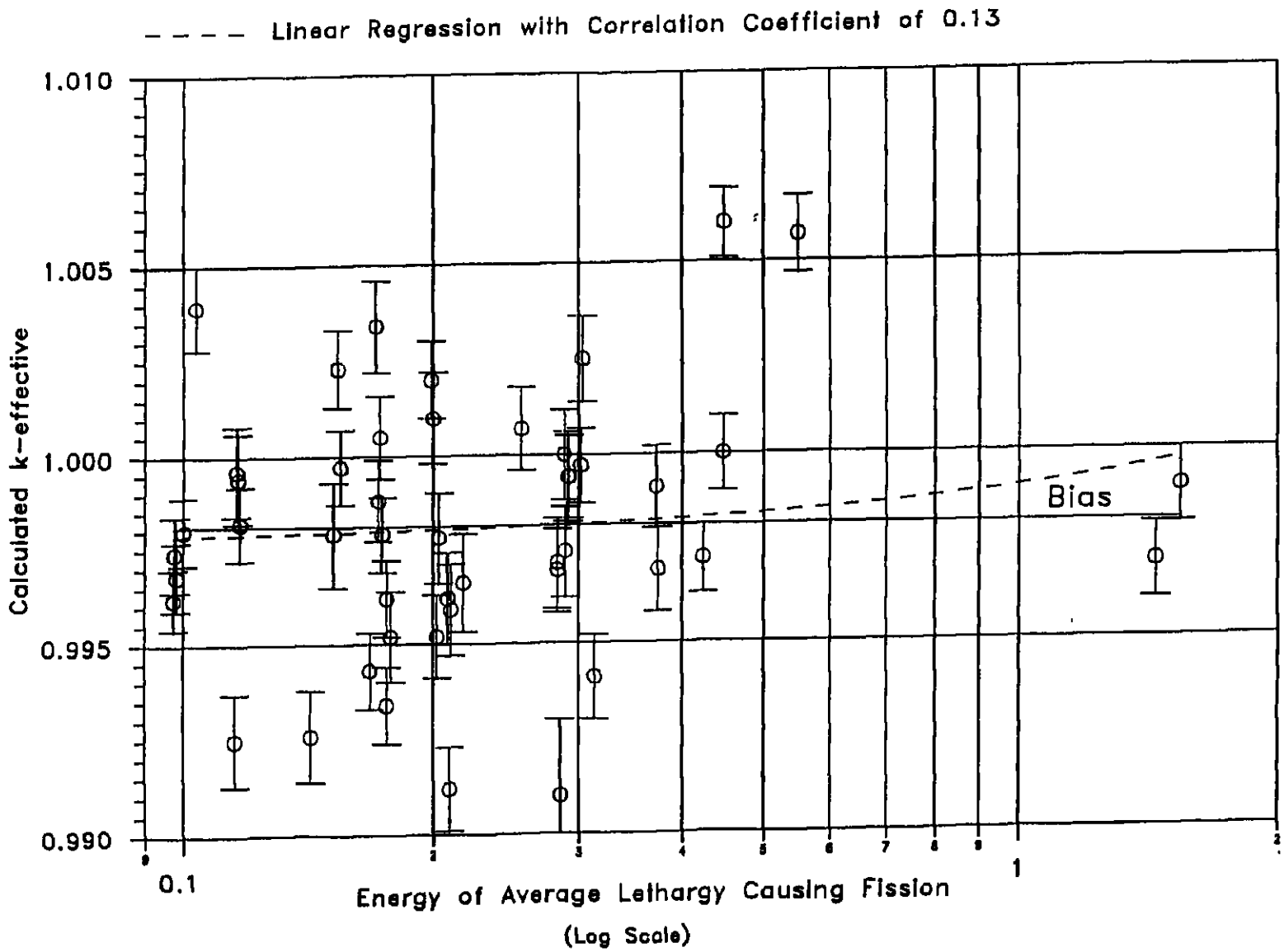

MCNP CALCULATED k-eff VALUES for VARIOUS VALUES OF THE SPECTRAL INDEX

WOLF CREEK
UPDATED SAFETY ANALYSIS REPORT

FIGURE 9.1A-4

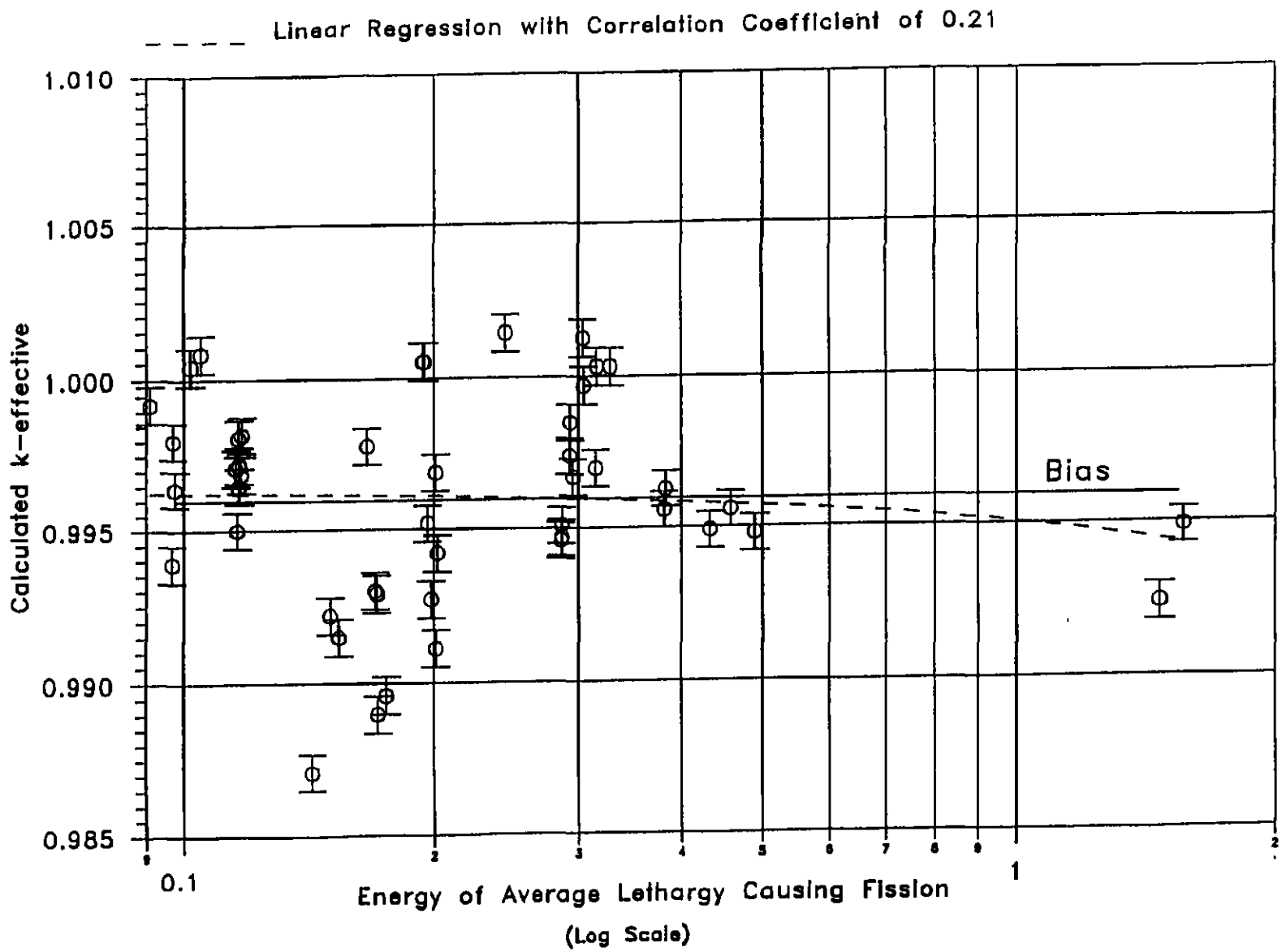

KENO5a CALCULATED k-eff VALUES FOR VARIOUS VALUES OF THE SPECTRAL INDEX

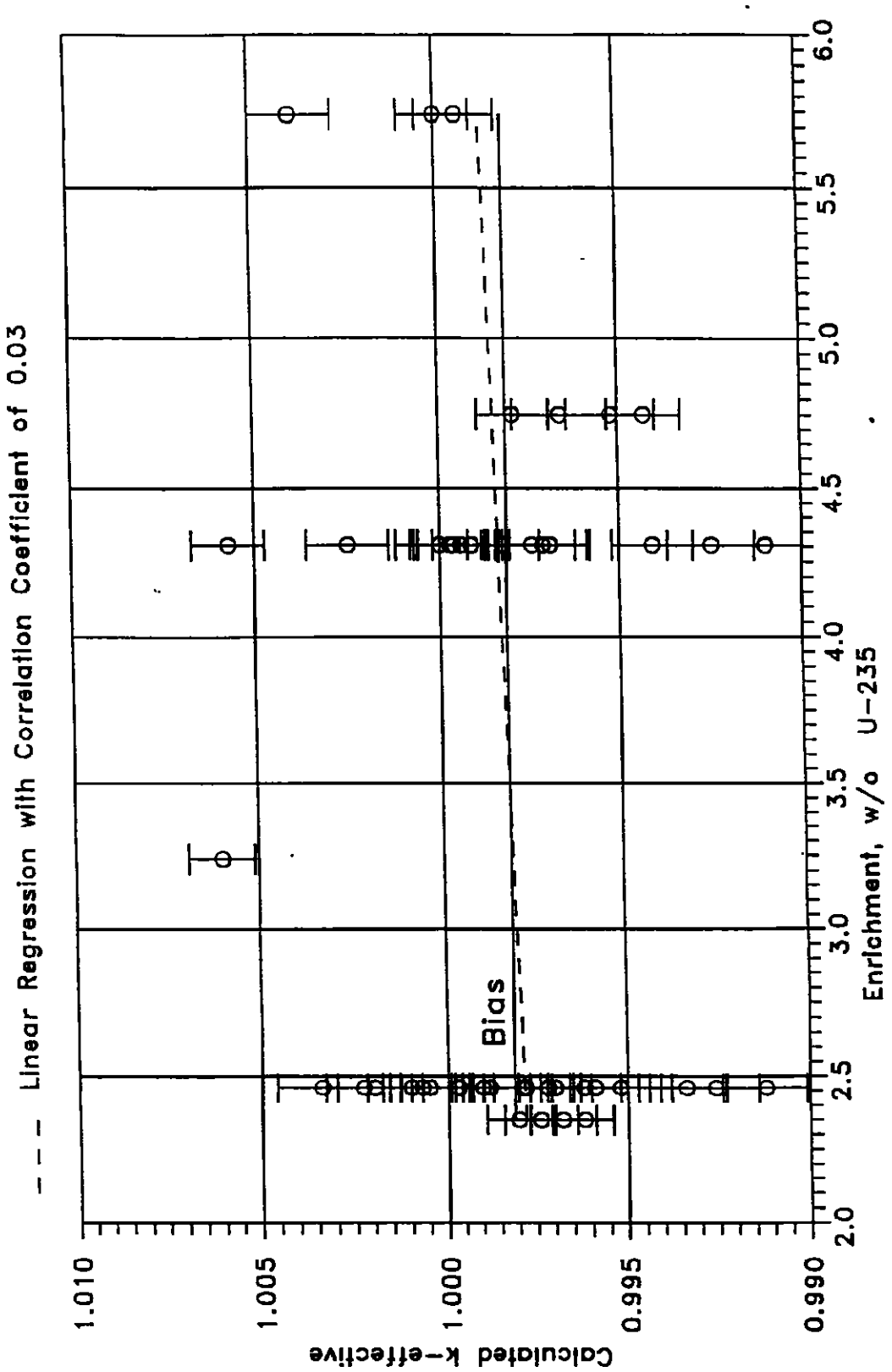

MCNP CALCULATED k-eff VALUES
AT VARIOUS U-235 ENRICHMENTS

WOLF CREEK
UPDATED SAFETY ANALYSIS REPORT

FIGURE 9.1A-6

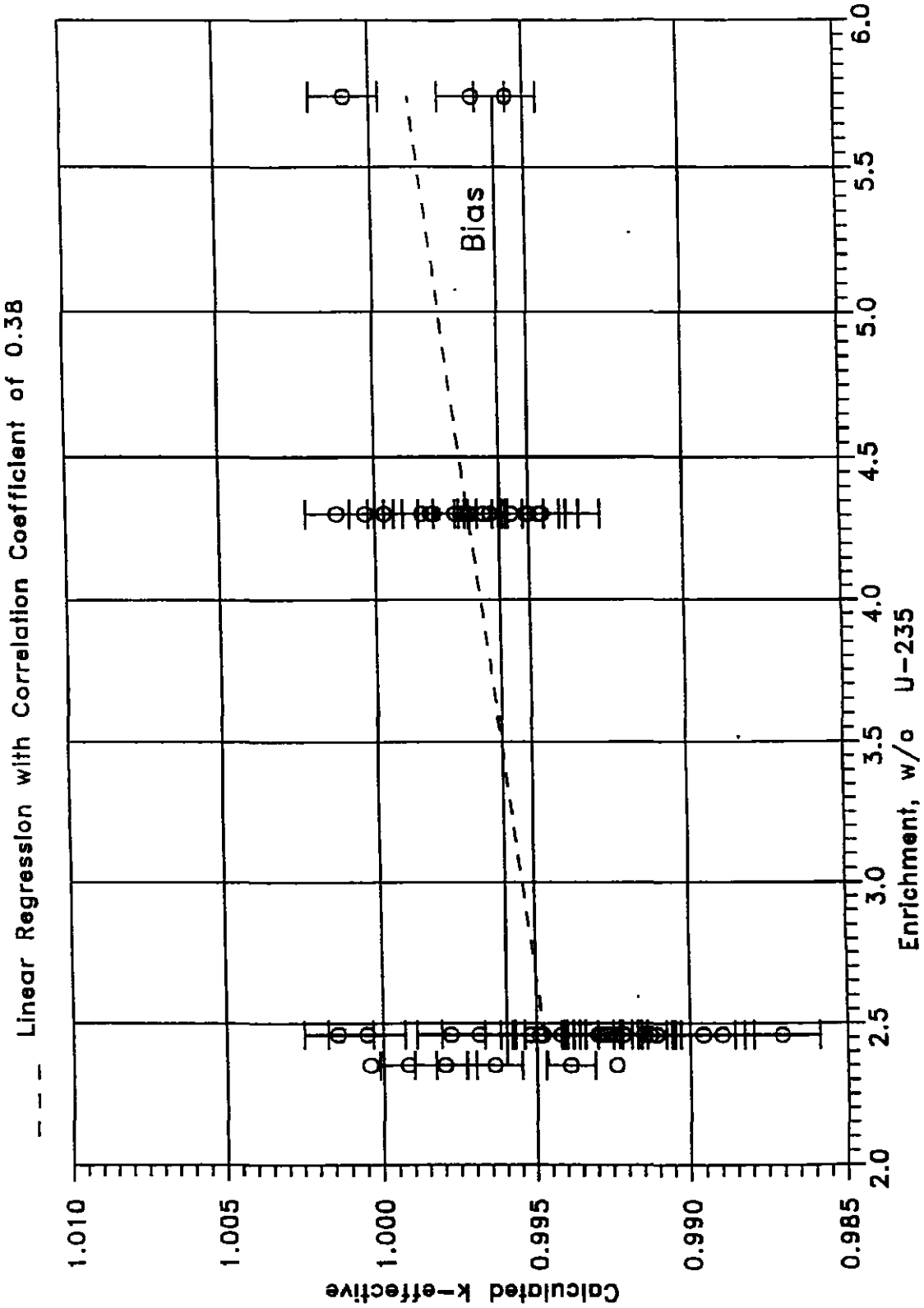

KENO CALCULATED k-eff VALUES
AT VARIOUS U-235 ENRICHMENTS

WOLF CREEK
UPDATED SAFETY ANALYSIS REPORT

FIGURE 9.1A-7

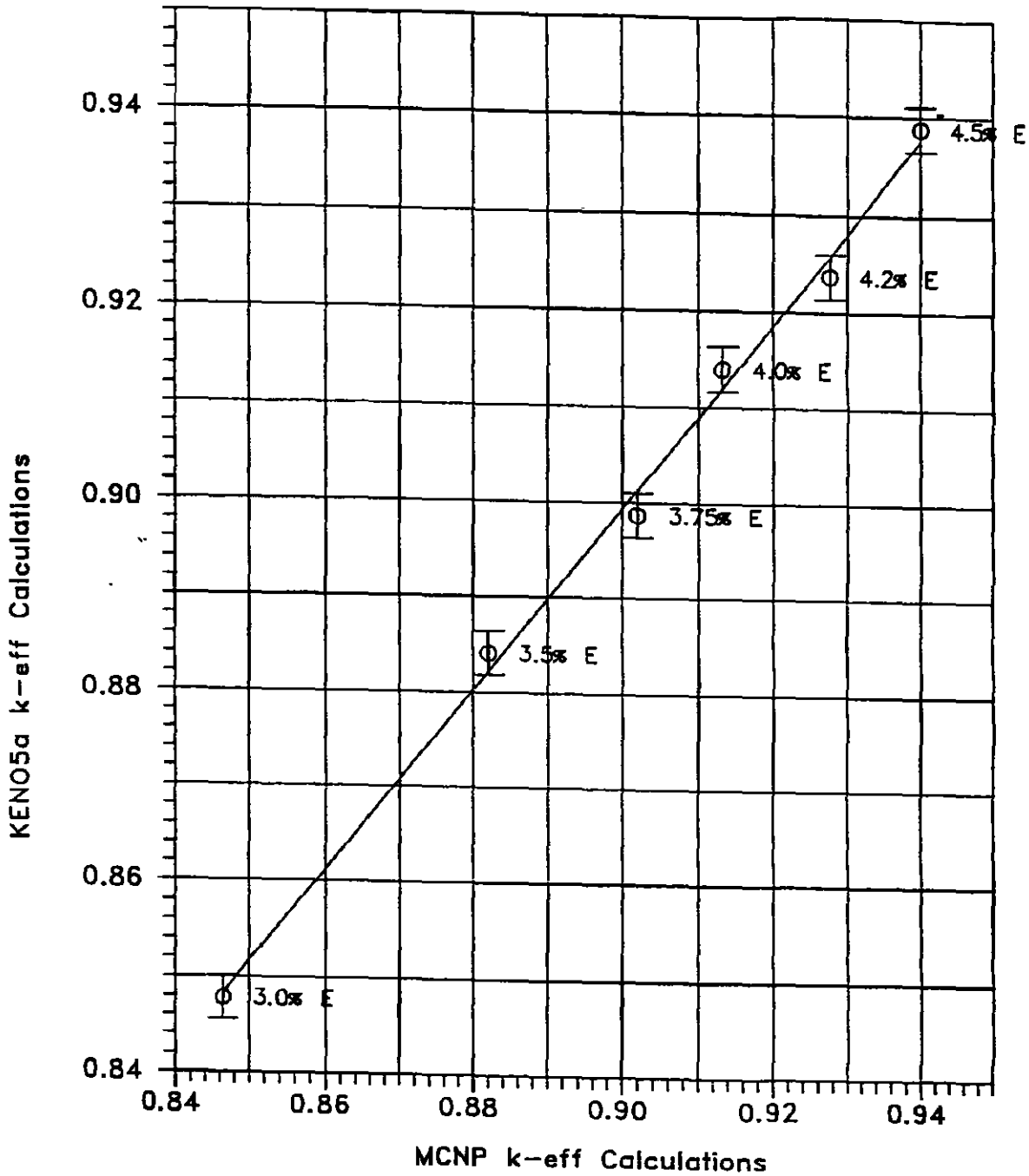

COMPARISON OF MCNP AND KENO5A CALCULATIONS FOR VARIOUS FUEL ENRICHMENTS

WOLF CREEK
UPDATED SAFETY ANALYSIS REPORT

FIGURE 9.1A-8

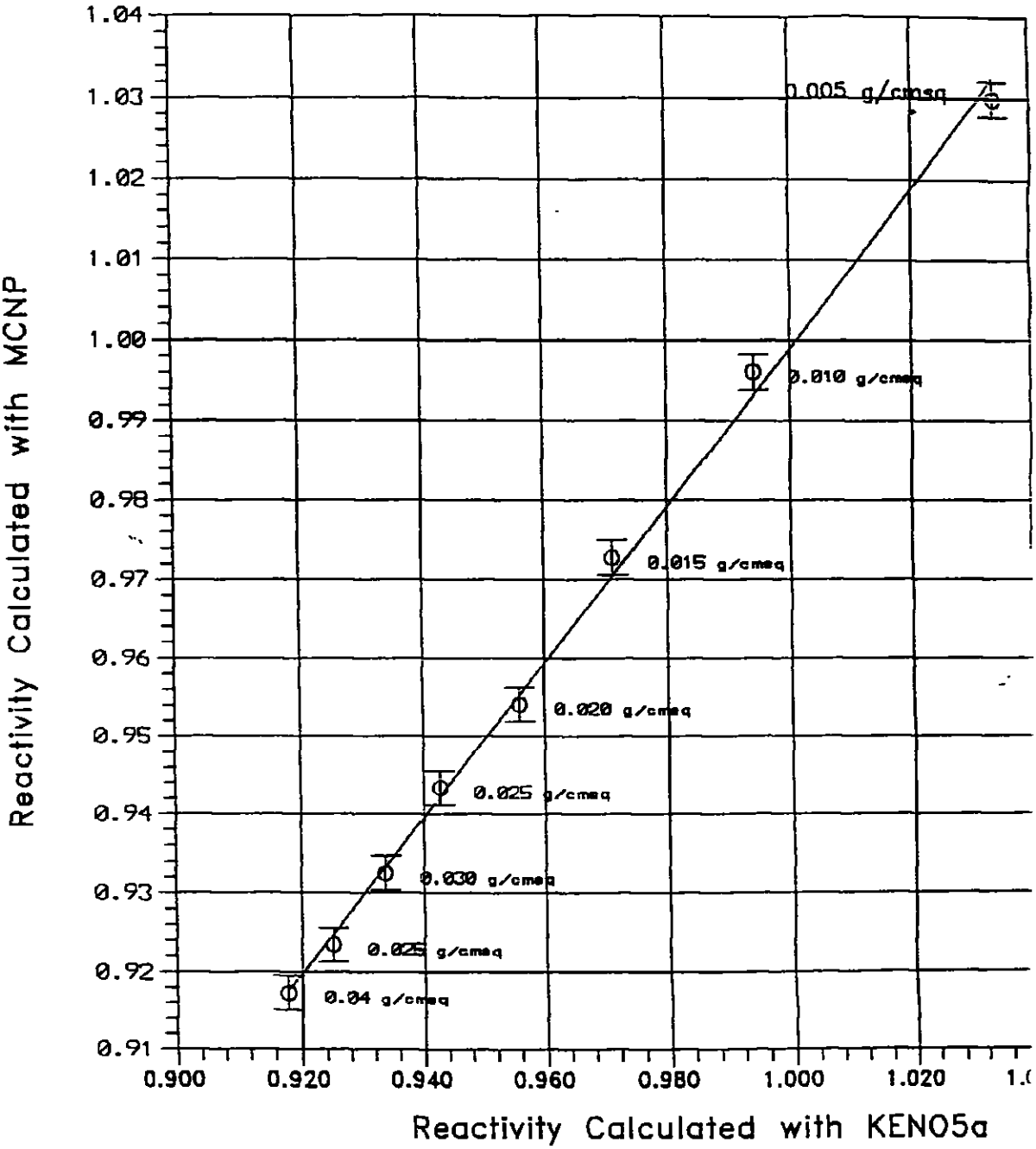

COMPARISON OF MCNP AND KENO5a CALCULATIONS FOR VARIOUS BORON-10 AREAL DENSITIES

WOLF CREEK UPDATED SAFETY ANALYSIS REPORT
FIGURE 9.1A-9

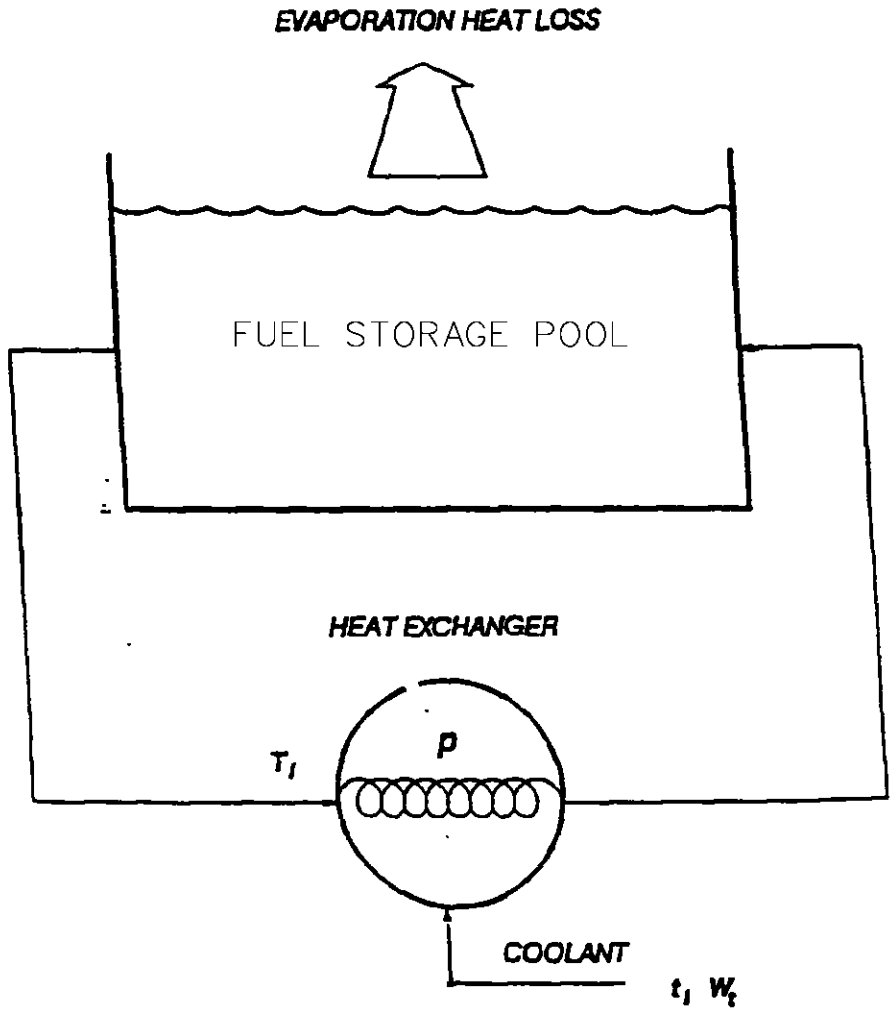

WOLF CREEK
UPDATED SAFETY ANALYSIS REPORT

FUEL STORAGE POOL COOLING MODEL
FIGURE 9.1A-10

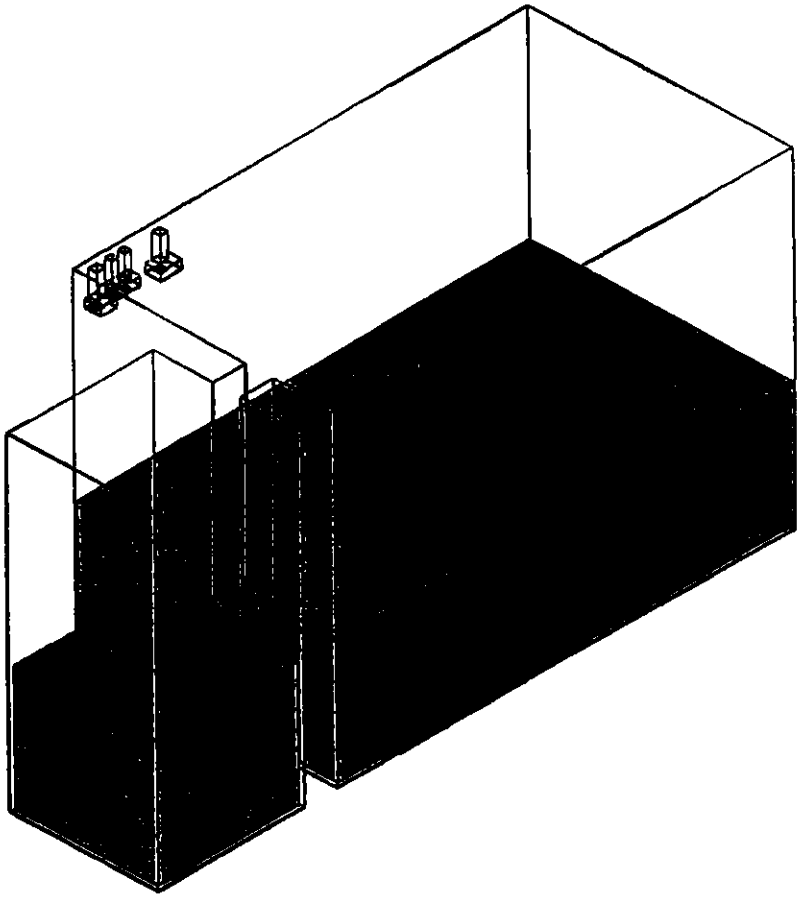

WOLF CREEK 3-D CFD MODEL

WOLF CREEK
UPDATED SAFETY ANALYSIS REPORT

ISOMETRIC VIEW OF
FUEL STORAGE POOL CFD MODEL
FIGURE 9.1A-11

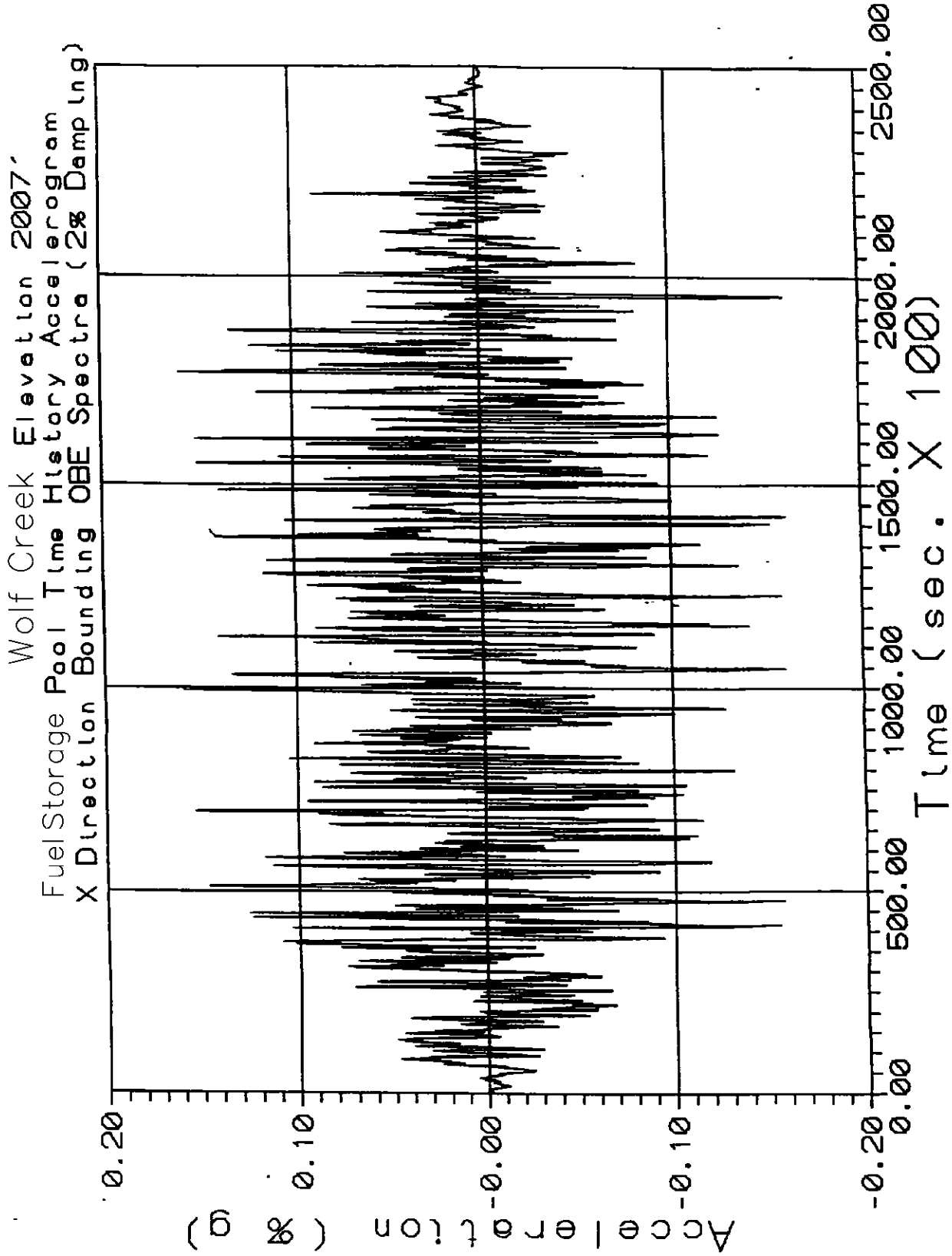

WOLF CREEK
UPDATED SAFETY ANALYSIS REPORT

FIGURE 9.1A-12

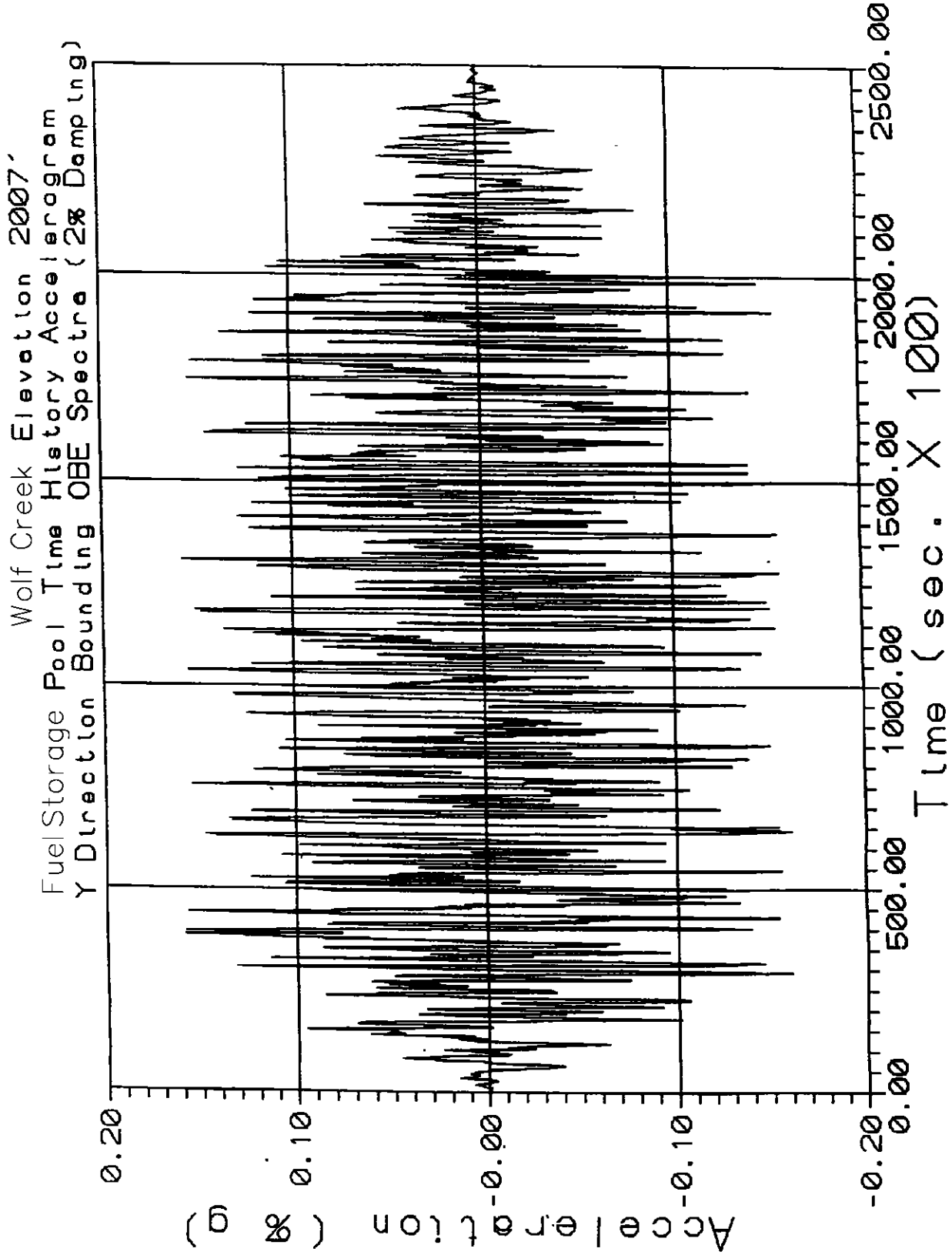

WOLF CREEK
UPDATED SAFETY ANALYSIS REPORT

FIGURE 9.1A-13

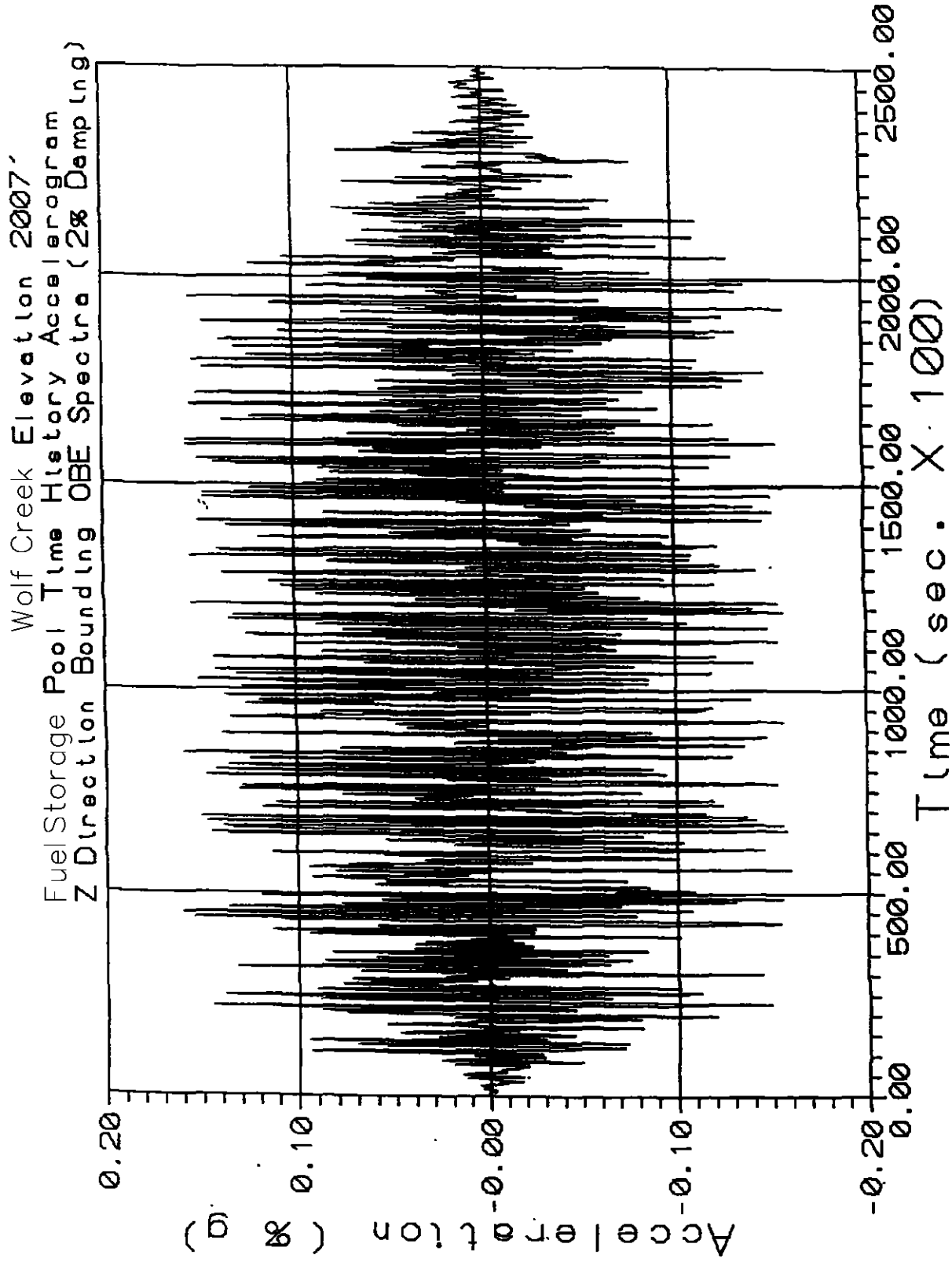

WOLF CREEK
UPDATED SAFETY ANALYSIS REPORT

FIGURE 9.1A-14

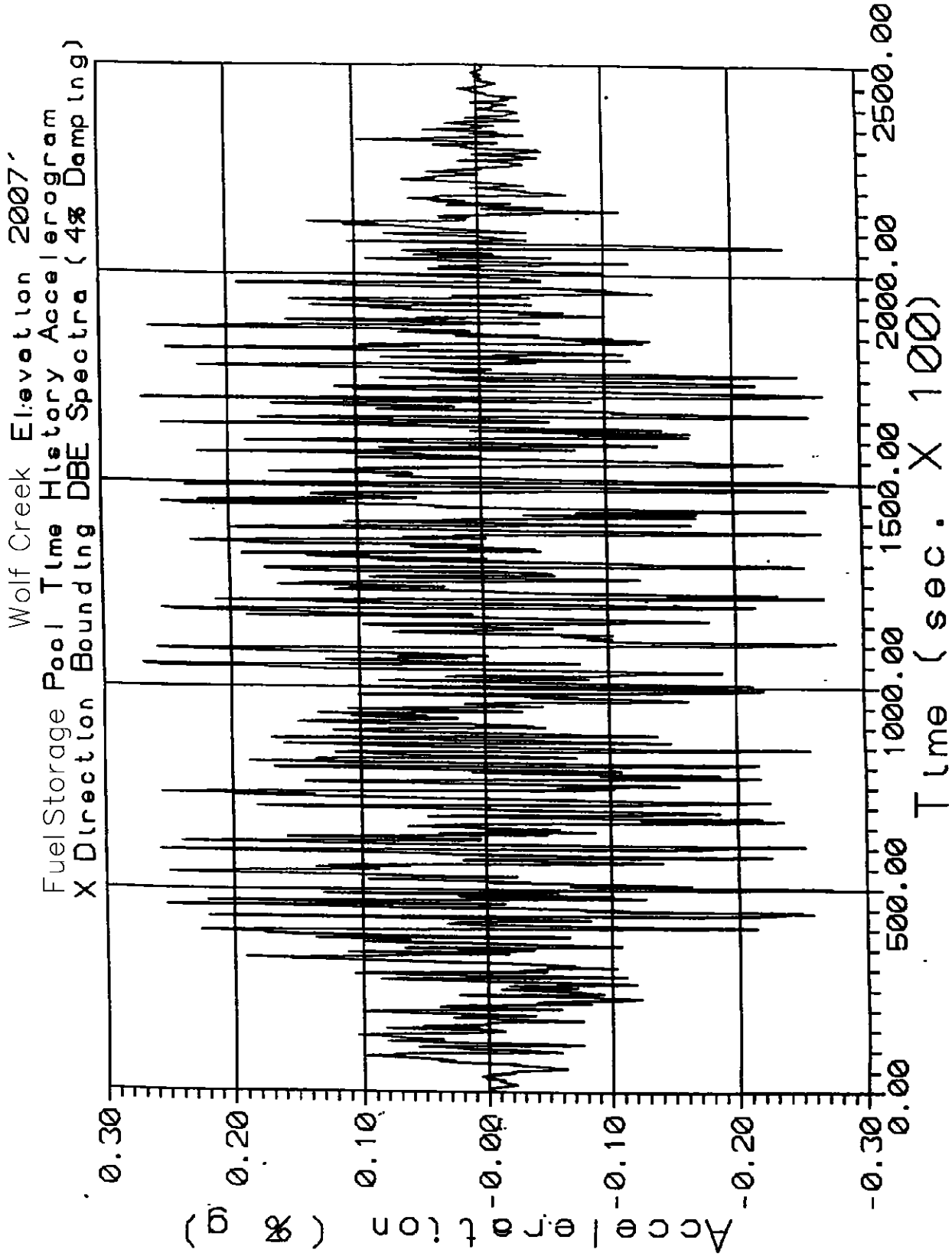

WOLF CREEK
UPDATED SAFETY ANALYSIS REPORT

FIGURE 9.1A-15

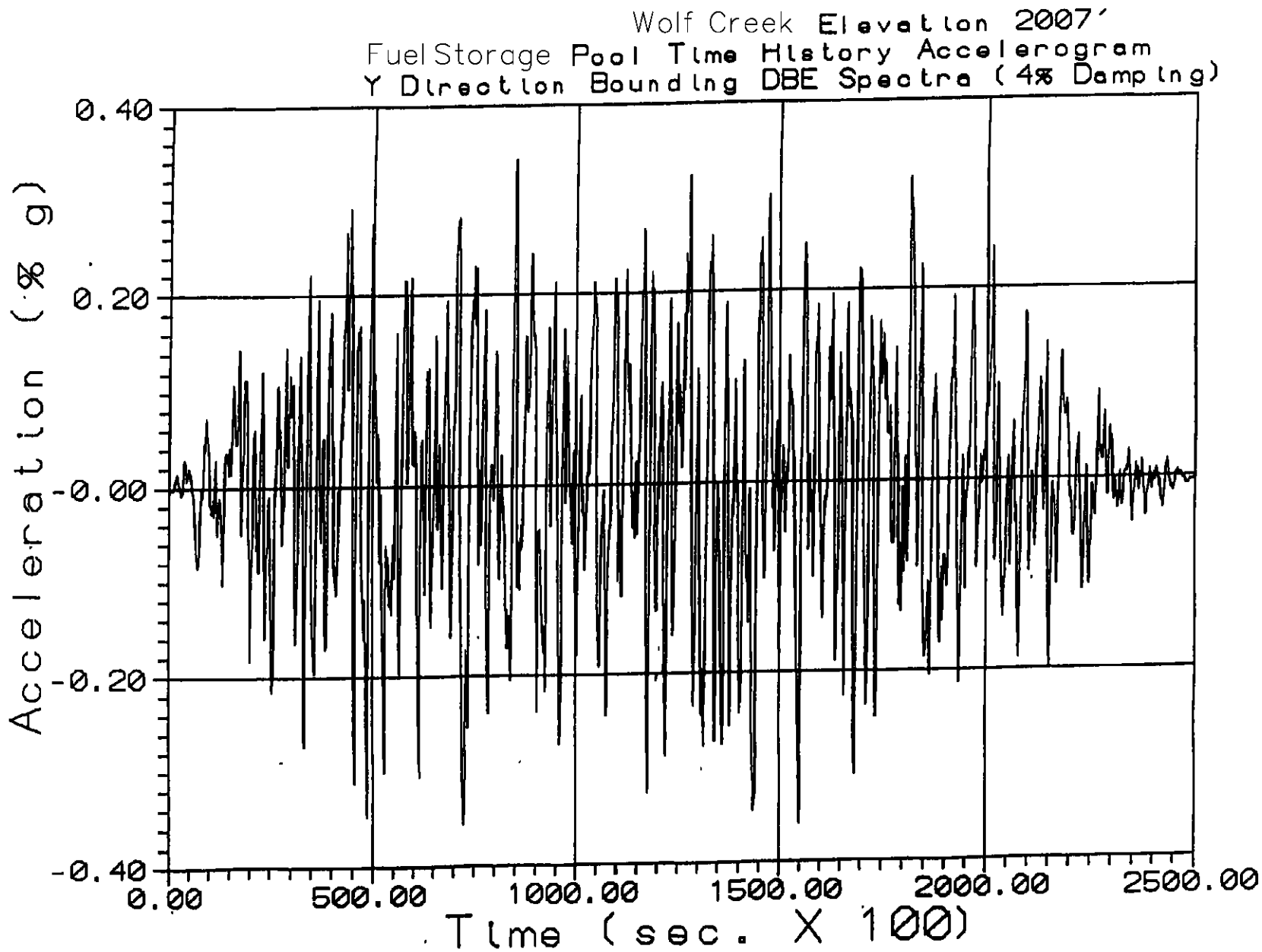

WOLF CREEK
UPDATED SAFETY ANALYSIS REPORT

FIGURE 9.1A-15A

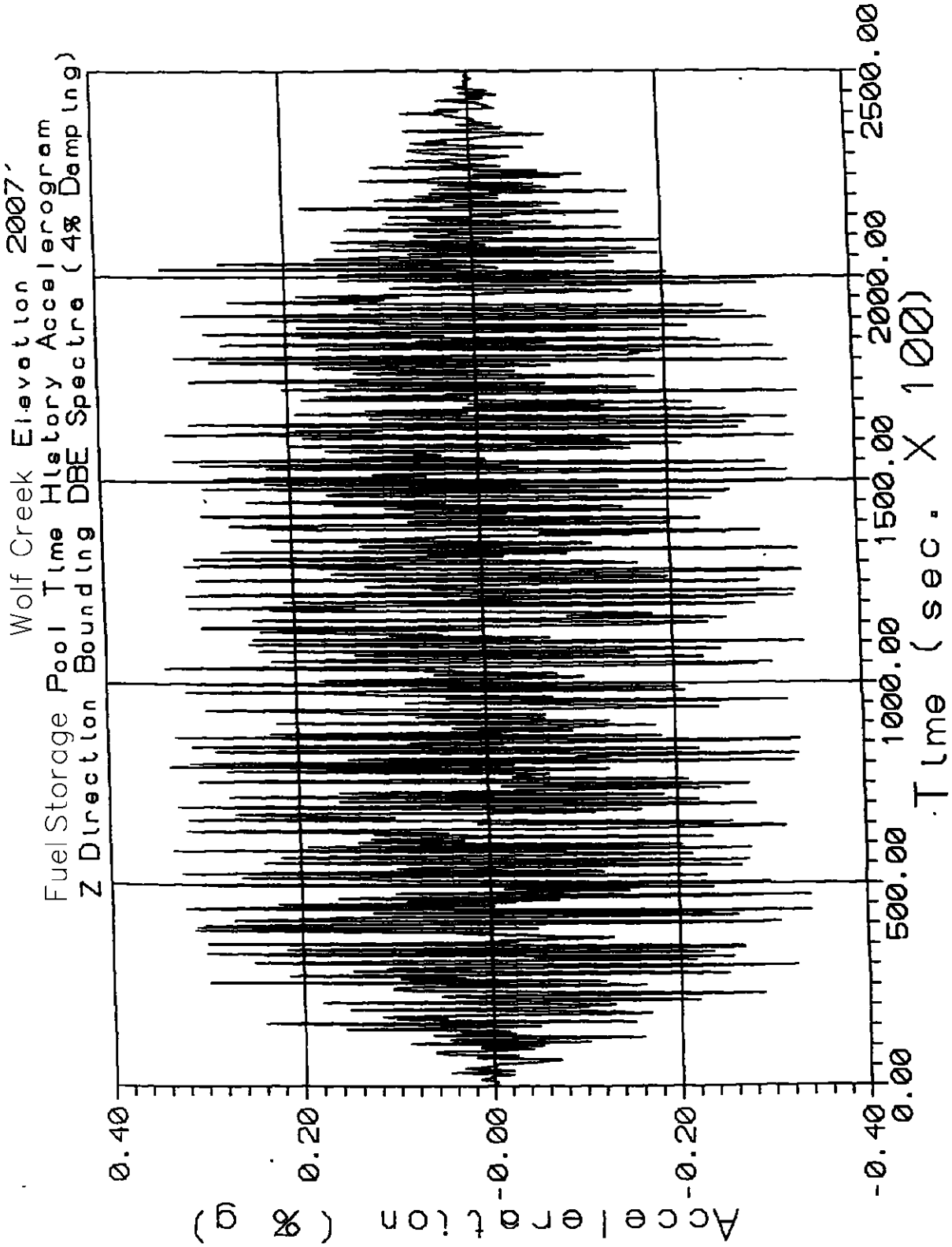

WOLF CREEK
UPDATED SAFETY ANALYSIS REPORT

FIGURE 9.1A-16

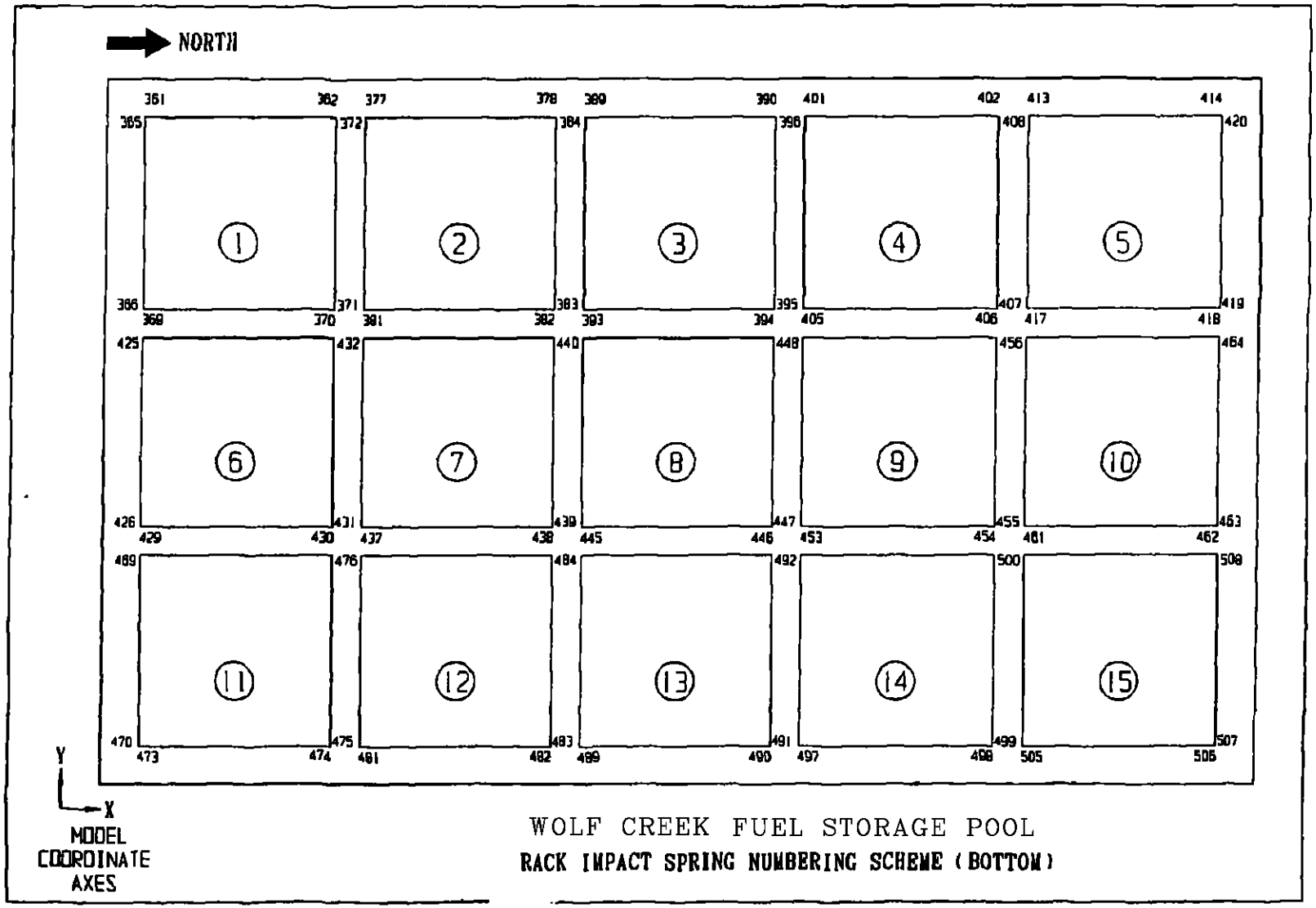

WOLF CREEK FUEL STORAGE POOL

RACK IMPACT SPRING NUMBERING SCHEME (BOTTOM)

WOLF CREEK
UPDATED SAFETY ANALYSIS REPORT

FIGURE 9.1A-17

REV. 14

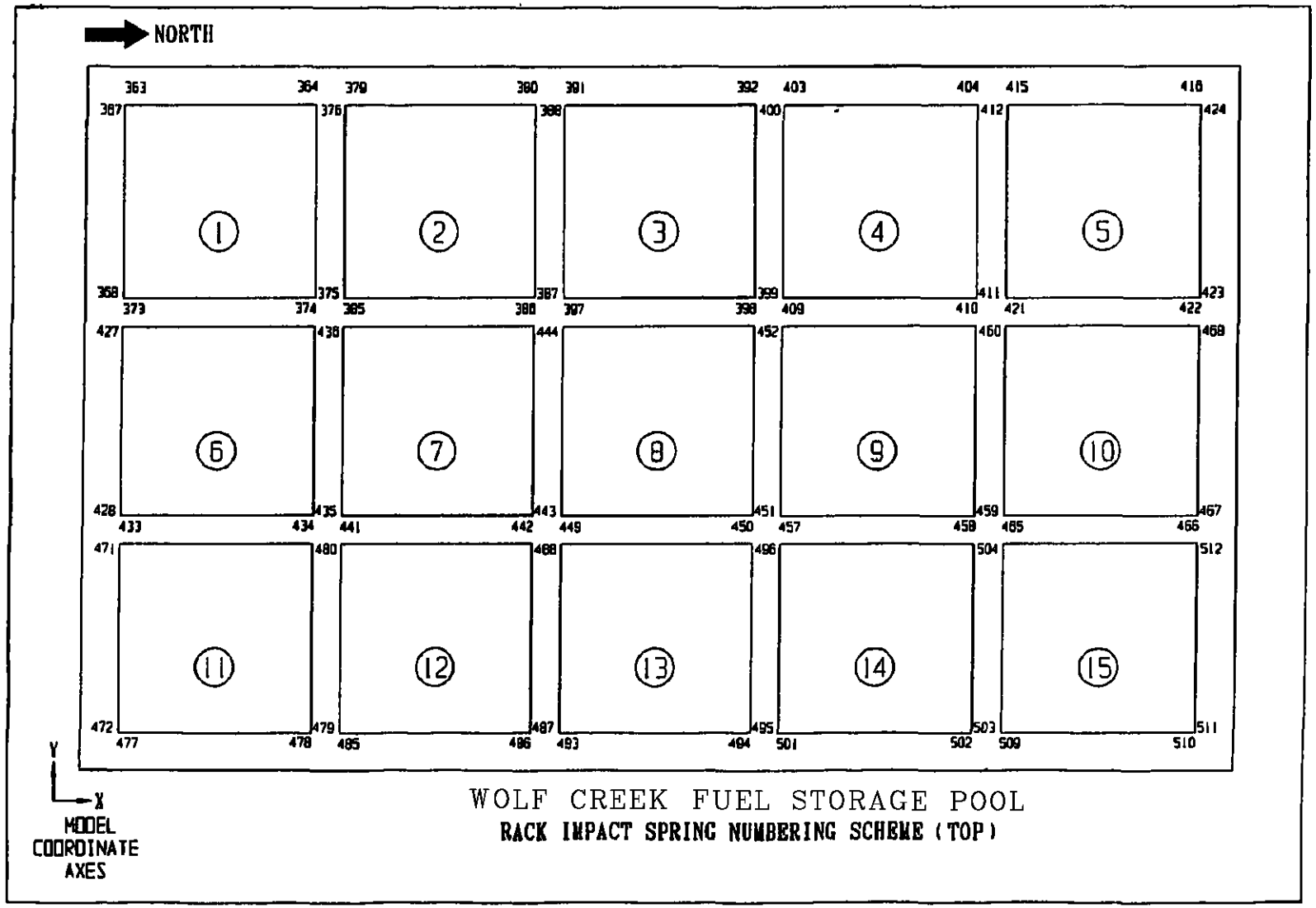

WOLF CREEK FUEL STORAGE POOL

RACK IMPACT SPRING NUMBERING SCHEME (TOP)

WOLF CREEK
UPDATED SAFETY ANALYSIS REPORT

FIGURE 9.1A-18

REV. 14

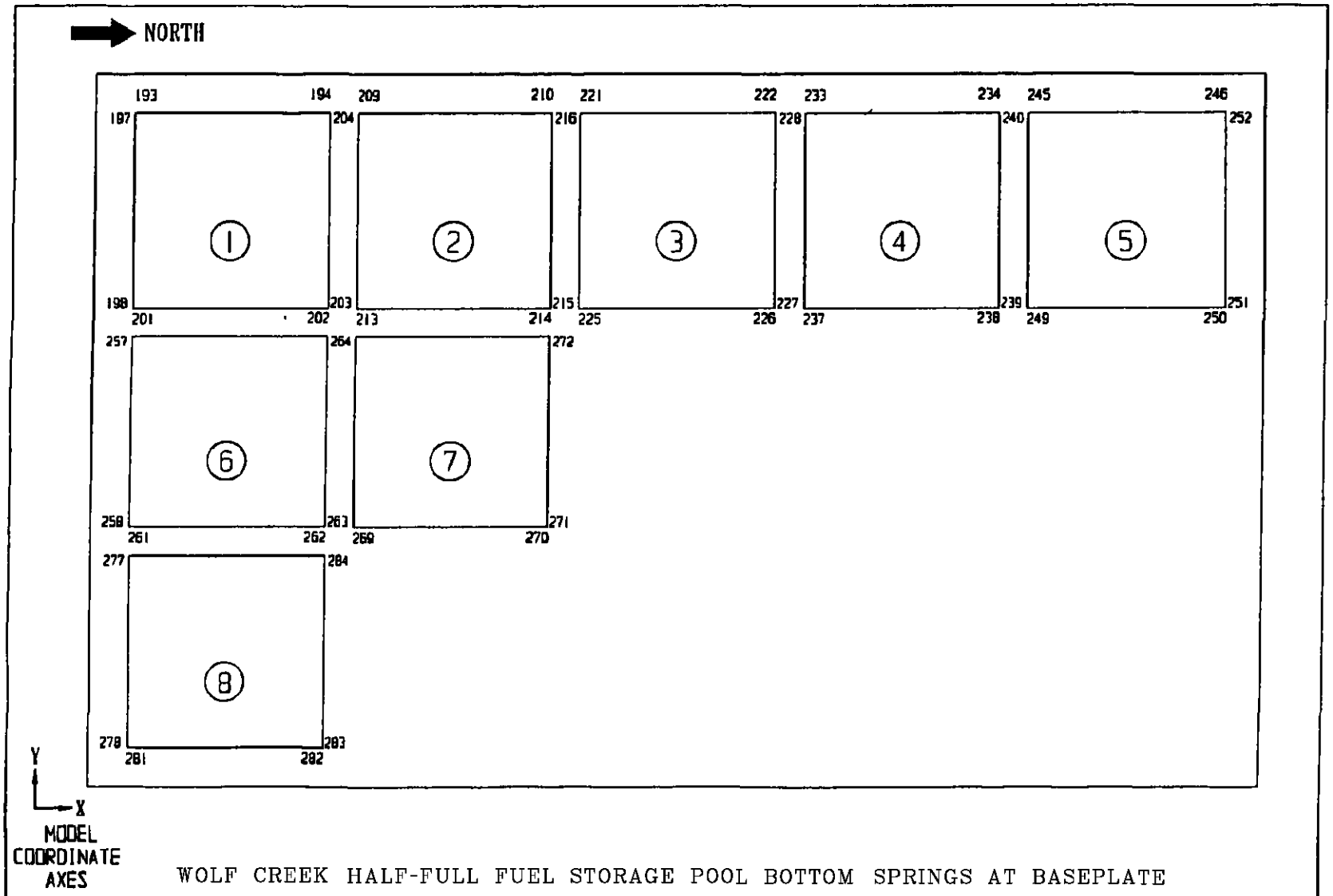

WOLF CREEK HALF-FULL FUEL STORAGE POOL BOTTOM SPRINGS AT BASEPLATE

WOLF CREEK
UPDATED SAFETY ANALYSIS REPORT

FIGURE 9.1A-19

REV. 14

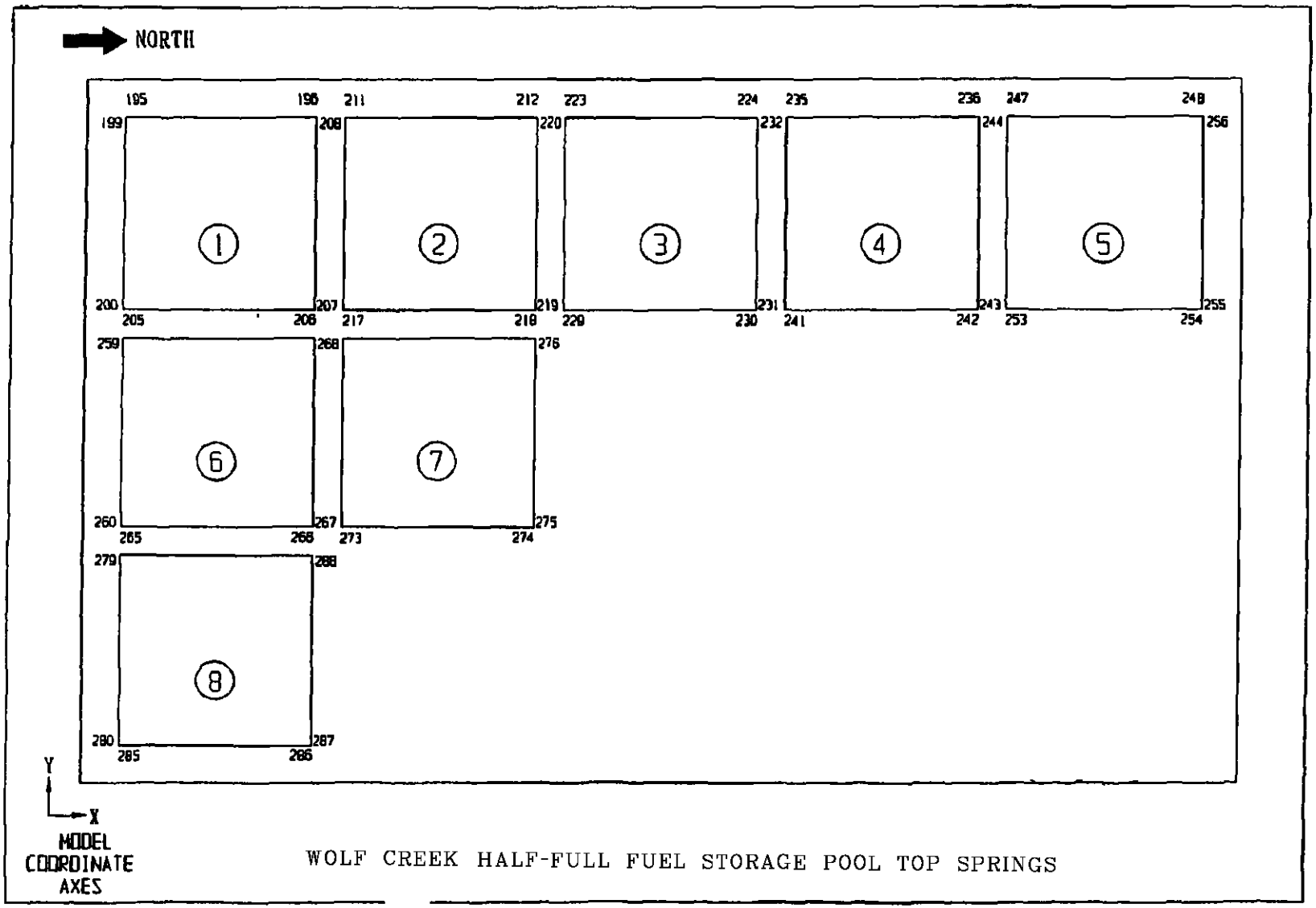

WOLF CREEK HALF-FULL FUEL STORAGE POOL TOP SPRINGS

WOLF CREEK
UPDATED SAFETY ANALYSIS REPORT

FIGURE 9.1A-20

REV. 14

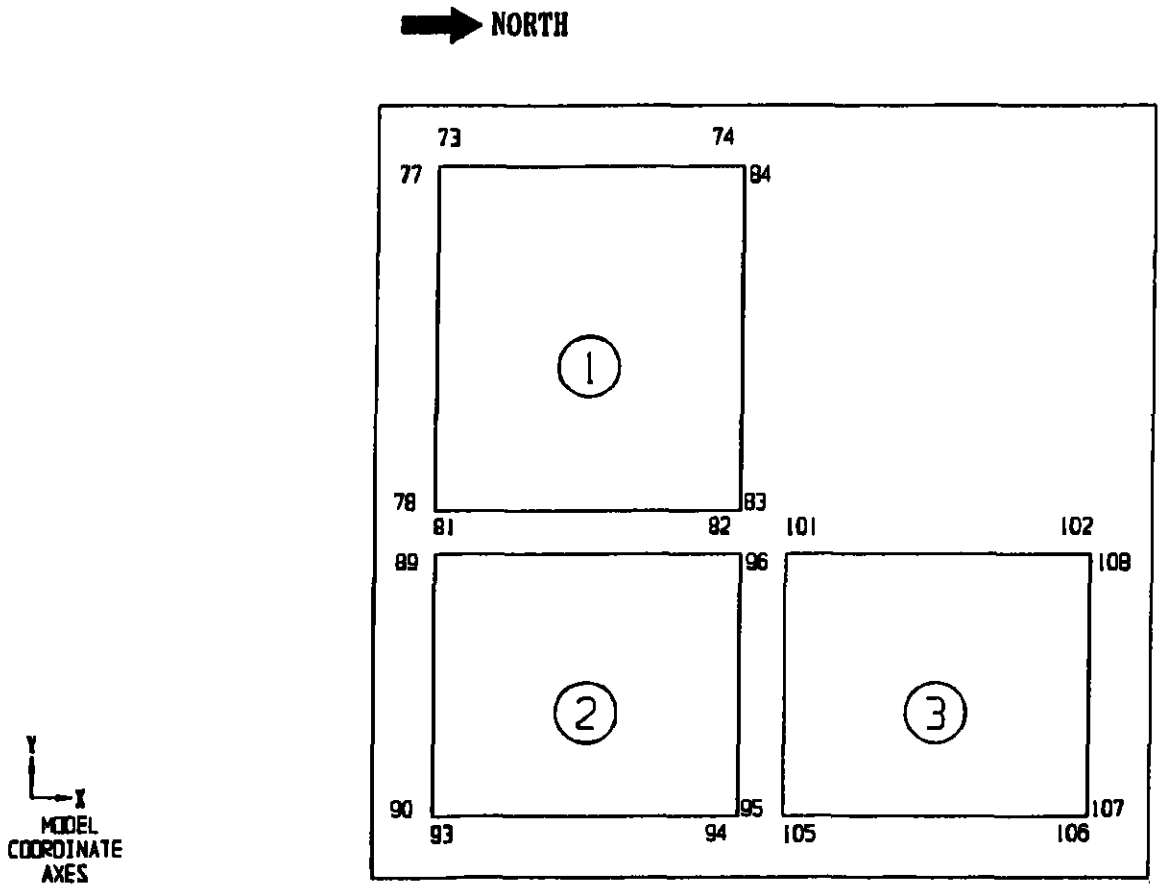

WOLF CREEK CASK LOADING POOL BOTTOM SPRINGS

WOLF CREEK
UPDATED SAFETY ANALYSIS REPORT

FIGURE 9.1A-21

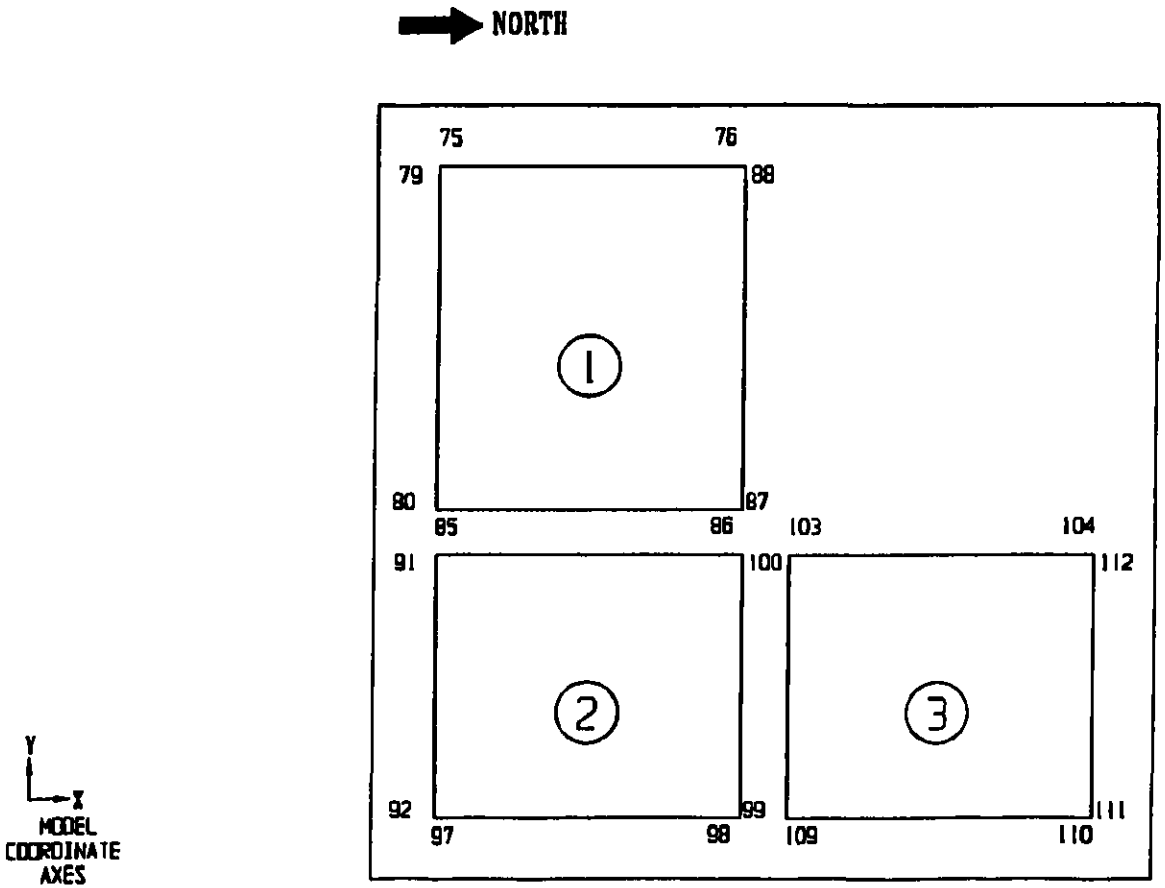

WOLF CREEK CASK LOADING POOL TOP SPRINGS

WOLF CREEK
UPDATED SAFETY ANALYSIS REPORT

FIGURE 9.1A-22

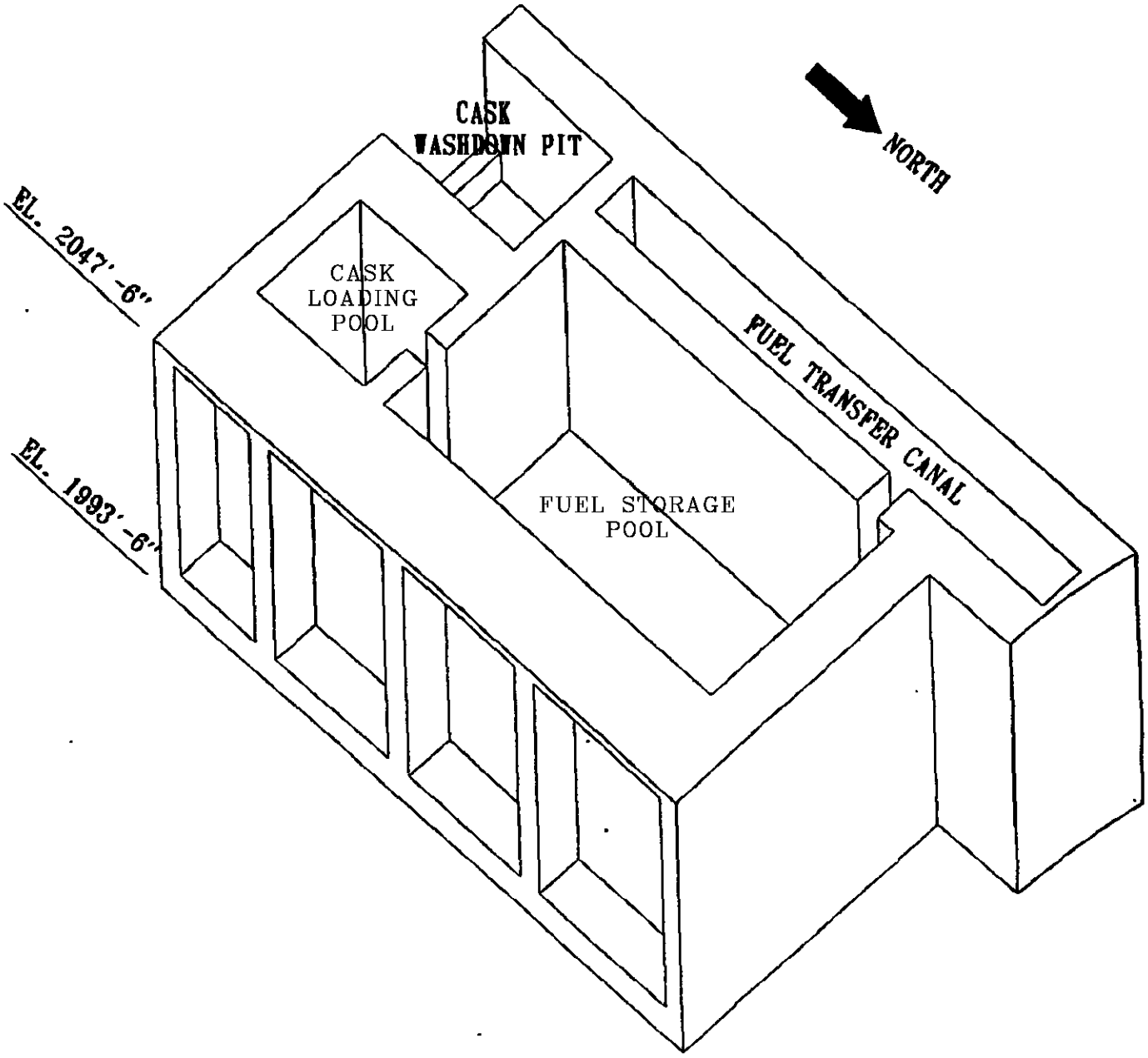

WOLF CREEK
UPDATED SAFETY ANALYSIS REPORT

ISOMETRIC VIEW OF THE
FUEL STORAGE POOL AREA
FIGURE 9.1A-23

REV. 14

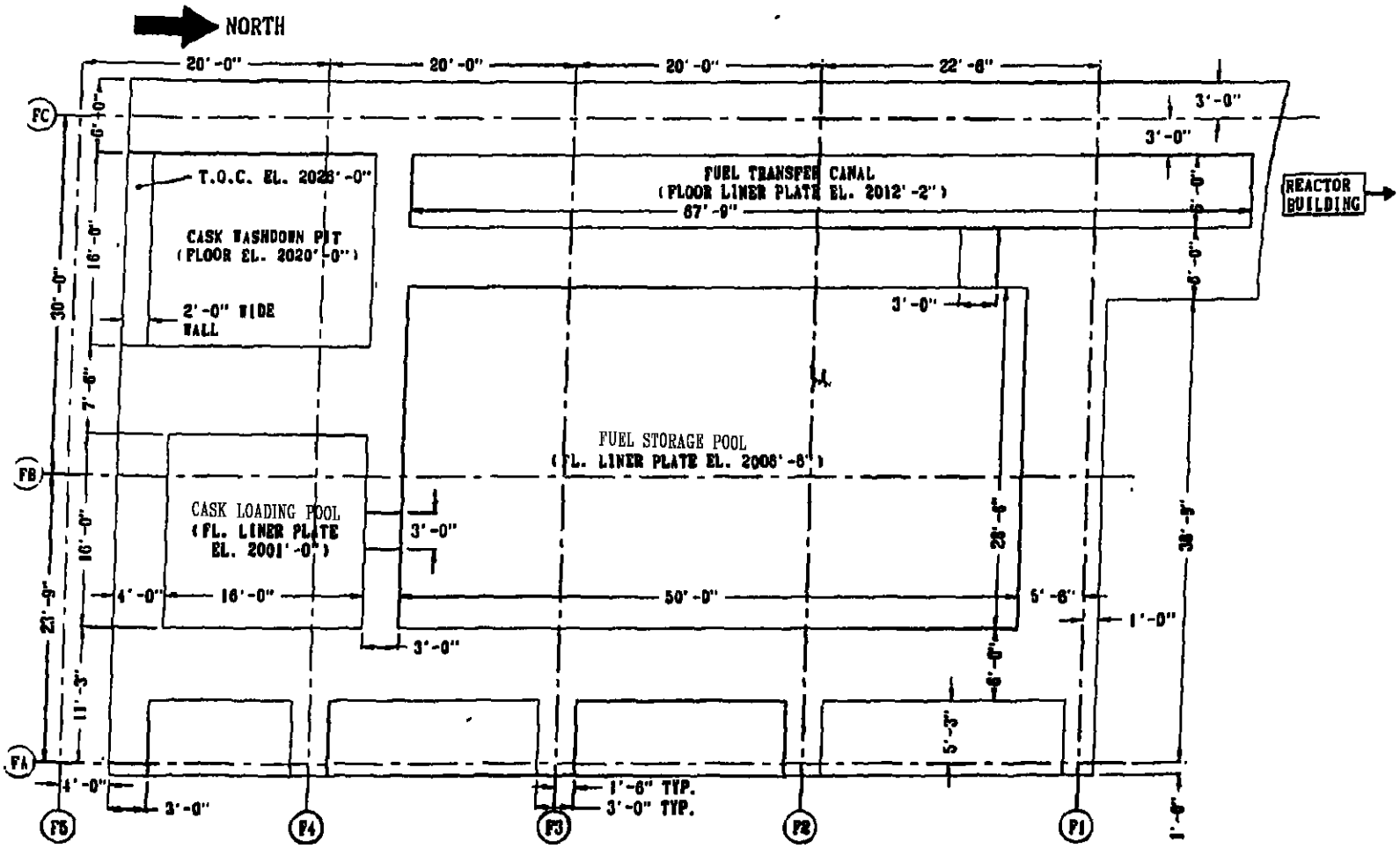

WOLF CREEK
UPDATED SAFETY ANALYSIS REPORT

PLAN VIEW AND DIMENSIONS
OF THE FUEL STORAGE POOL AREA
FIGURE 9.1A-24

REV. 14

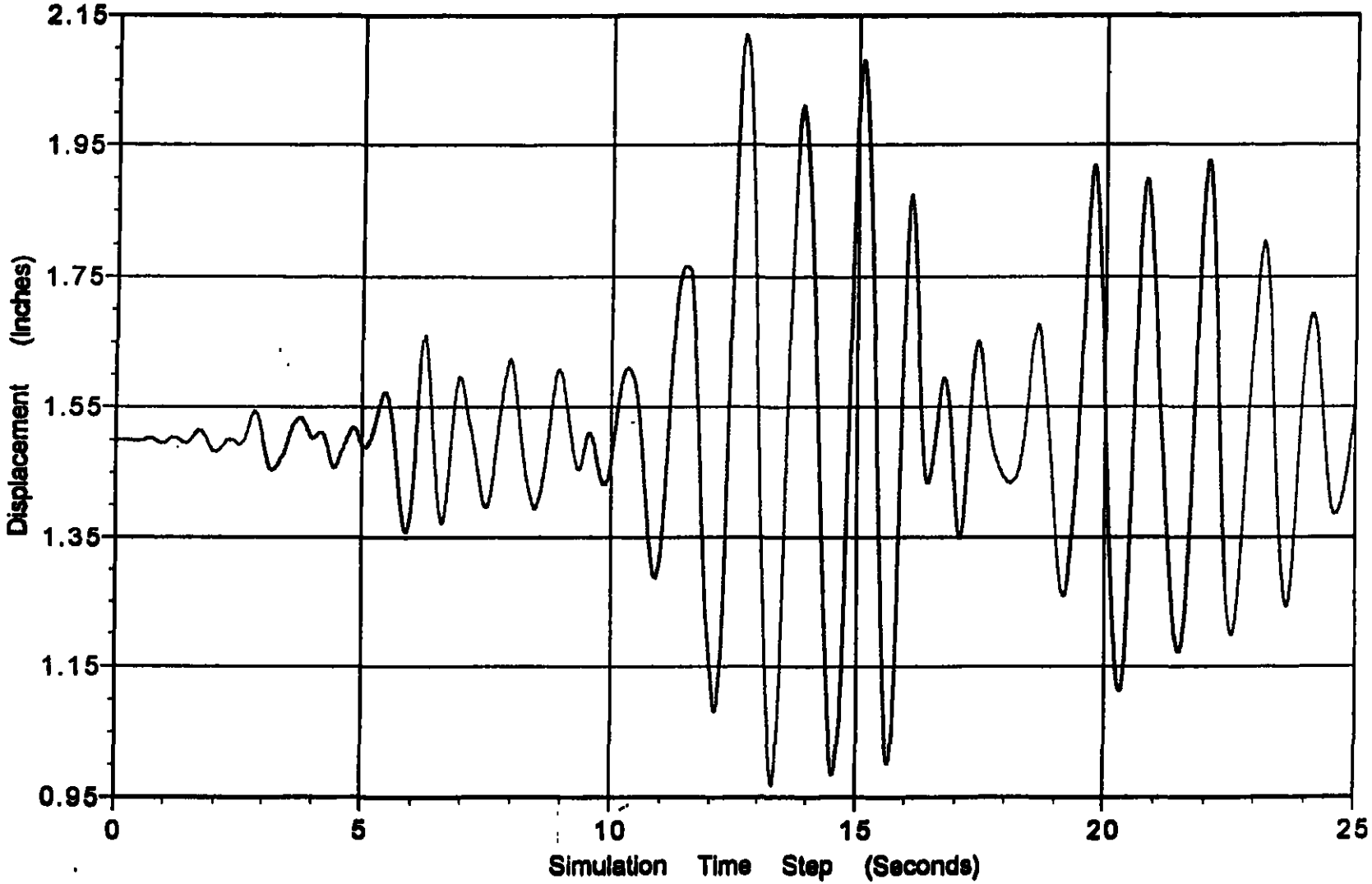

Plot of Gap Between Racks 13 and 14 at Spring No. 496 In Full SFP Model

WOLF CREEK
UPDATED SAFETY ANALYSIS REPORT

FIGURE 9.1A-25

REV. 14

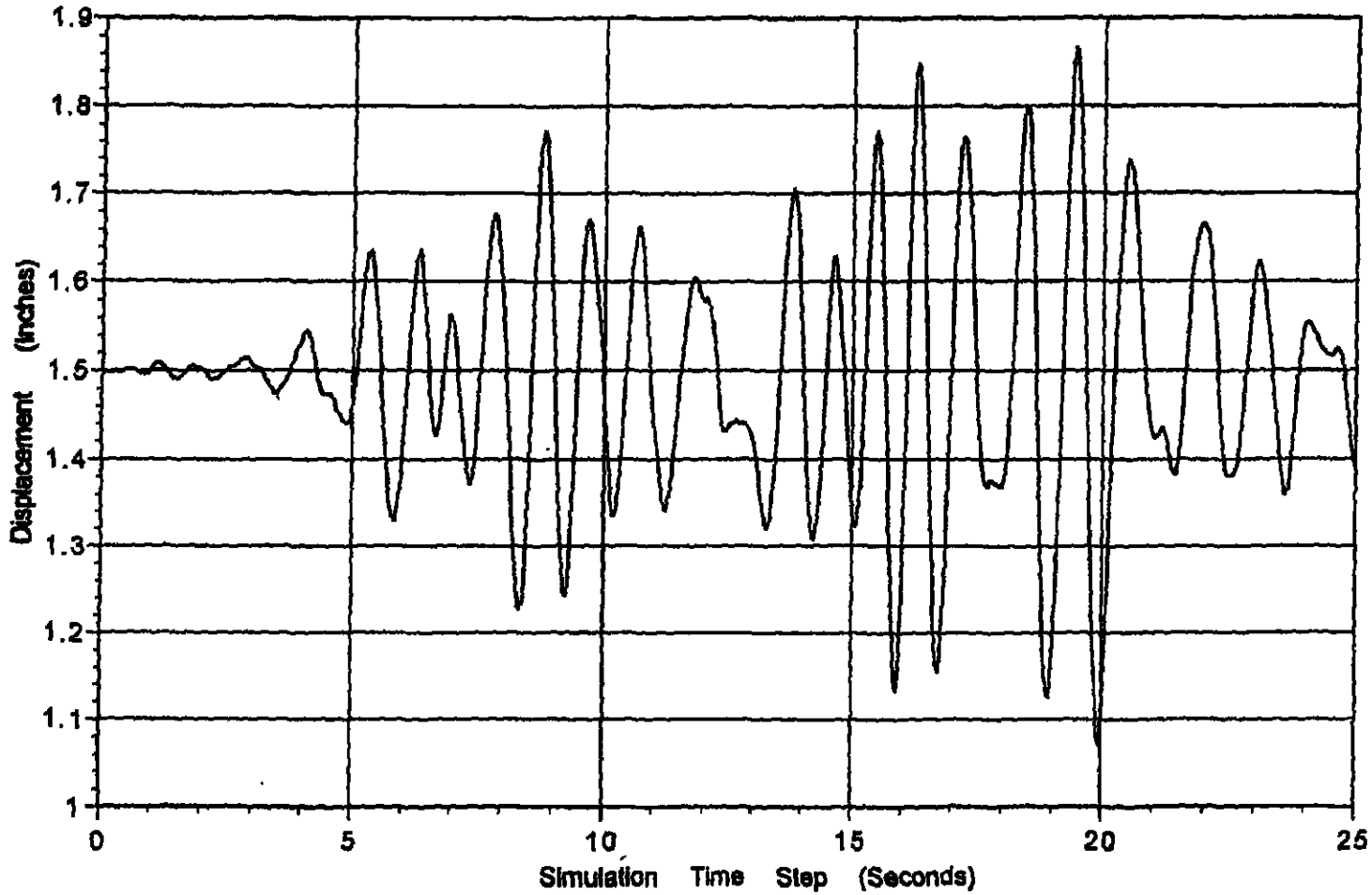

Plot of Gap Between Racks 14 and 15 at Spring No. 504 in Full SFP Model

WOLF CREEK
UPDATED SAFETY ANALYSIS REPORT

FIGURE 9.1A-26

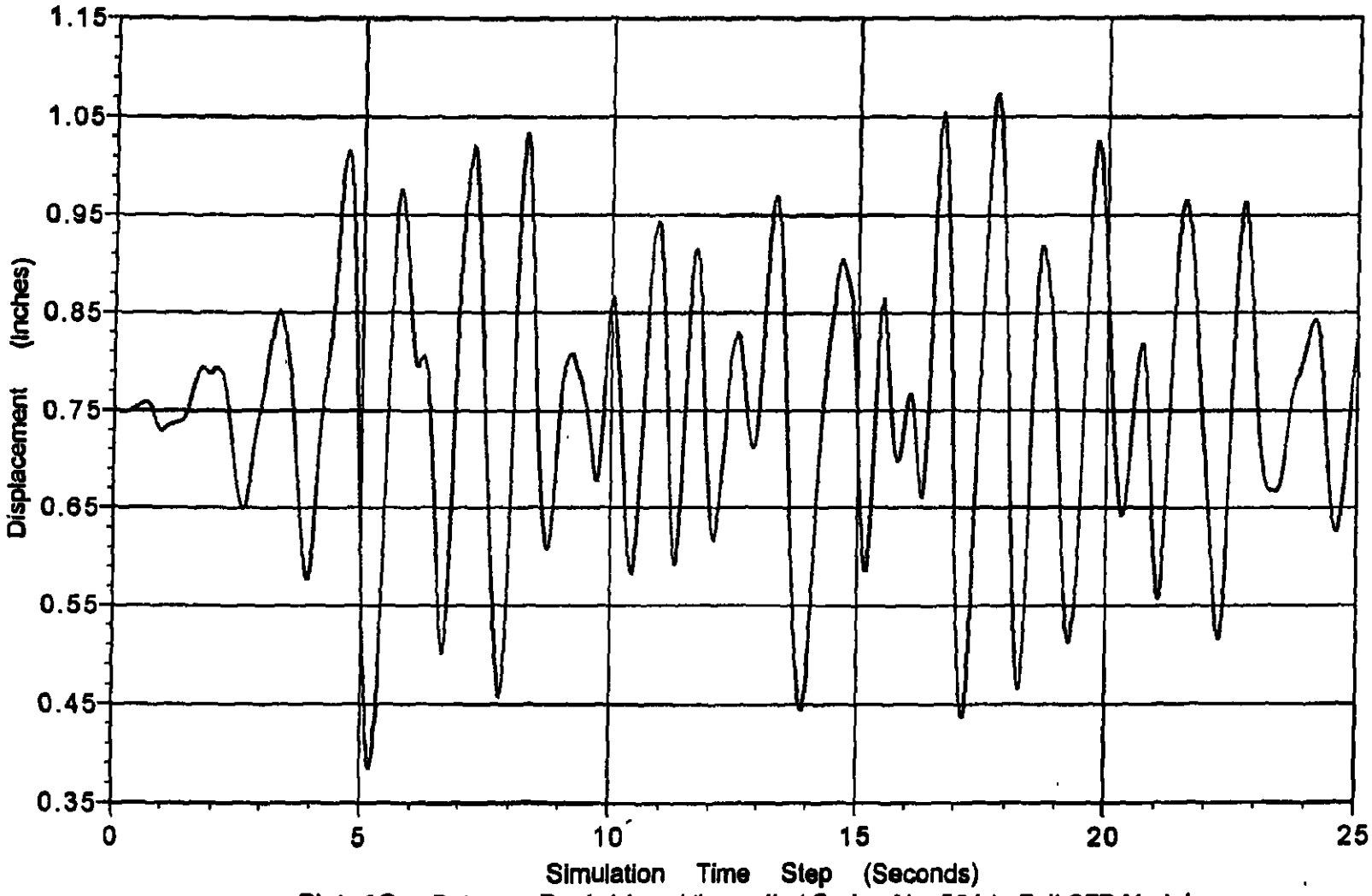

Plot of Gap Between Rack 14 and the wall at Spring No. 501 in Full SFP Model

WOLF CREEK
UPDATED SAFETY ANALYSIS REPORT

FIGURE 9.1A-27

9.2 WATER SYSTEMS

9.2.1 STATION SERVICE WATER SYSTEM

The station service water system consists of the service water system (SWS) and the essential service water system (ESWS). The SWS is used during normal operating and normal shutdown conditions. The ESWS is used during normal shutdown conditions and abnormal conditions, such as loss of offsite power and a LOCA. In addition to the following descriptions of the SWS and the ESWS, refer to Sections 9.2.1.1 and 9.2.1.2, respectively.

9.2.1.1 Service Water System

The SWS is a nonsafety-related system which provides a source of heat rejection for plant auxiliaries which require cooling during normal plant operation and normal plant shutdown. The system also supplies cooling water to the safety-related ESWS during normal operation. The heated service water is discharged to the circulating water system and to the Ultimate Heat Sink.

9.2.1.1.1 Design Bases

9.2.1.1.1.1 Safety Design Bases

The SWS serves no safety-related function.

9.2.1.1.1.2 Power Generation Design Bases

POWER GENERATION DESIGN BASIS ONE - The SWS provides sufficient cooling water for the heat removal from nonessential auxiliary plant equipment and from the ESWS over the full range of the normal reactor operation and normal shutdown.

9.2.1.1.2 System Description

9.2.1.1.2.1 General Description

The SWS consists of piping, valves, pumps, strainers, instrumentation, and traveling water screens, as shown in Figures 9.2-1 and 10.4-1. The pumps, strainers and traveling water screens are located at the Circulating Water Screenhouse (CWSH). The SWS consists of three one-half capacity service water pumps and one low flow and startup pump, traveling screens and automatic backwash strainers, all located in the screenhouse. During normal plant operation, the SWS supplies cooling water to the turbine plant auxiliary equipment, steam generator blowdown nonregenerative heat exchanger, and CVCS chiller, as well as components served by the ESWS. The service water system is the normal water supply for the Demineralized Water Makeup System. The components cooled by the SWS and their respective SWS flow rates and heat loads are given in Table 9.2-1.

9.2.1.1.2.2 Component Description

The majority of the SWS piping and valves are carbon steel. Some portions may be stainless steel. All piping and valves are designed to meet the requirements of ANSI B31.1. The design ratings of the SWS supply lines in the power block are 200 psig and 150 F, and discharge lines to the circulating water system are 85 psig and 150 F.

Trash is removed from the circulating water influent by traveling water screens operated as per system operating procedures. The traveling water screens can be rotated and backwashed, manually or automatically, due to differential pressure across the screens. Debris is automatically deposited in a basket for periodic removal by plant personnel.

The plant service water return discharges into the circulating water discharge. This discharge is directed to the station cooling lake.

Each service water pump is sized to deliver 25,000 gpm of service water at a discharge pressure of approximately 185 feet. To prevent organic fouling of the system, chlorination or liquid or solid, oxidizing or non-oxidizing biocide addition of the service water is performed on an intermittent basis at the CWSH. Cathodic protection of the underground SWS piping is provided to minimize long term corrosion problems from the soil. Connections are provided for localized chemical treatment of normally low flow and stagnant lines.

The CWSH and the SWS pumps are designed to accommodate the expected range of lake elevations. Freeze protection of the screenhouse inlet from the cooling lake is accomplished by a warming line from the circulating water discharge.

9.2.1.1.2.3 System Operation

Upon loss of offsite power or the receipt of a SIS, the system is isolated from the ESWS, as described in Section 9.2.1.2.

The SWS is designed to operate satisfactorily for all normal plant operating conditions throughout the range of cooling lake levels from 1075.5 feet m.s.l. minimum to 1095 feet m.s.l. maximum.

The SWS piping is filled with water and pressurized, with at least one pump operating at all times. The system is controlled by manually energizing or de-energizing any of the service water pumps and/or the low flow pump. The number of pumps in operation depends on the SWS header pressure, which is displayed on the Main Control Board (MCB), CWSH standby control panel and locally. The SWS header pressure downstream of the strainers is maintained at a minimum of 80 psig. This provides the required minimum pressure to the power block interface and prevents pump run-out (excessive flow). If pressure falls below this value, the event is alarmed on the MCB and CWSH standby control panels, and recorded by the plant computer.

9.2.1.1.3 Safety Evaluation

The SWS is not required for the safe shutdown of the plant. Equipment essential to the safe shutdown of the plant can be cooled by the ESWS and the component cooling water system.

9.2.1.1.4 Test and Inspection

The SWS is designed to permit periodic inspection and testing of system components to ensure that the design bases are met. The system is designed to permit periodic functional testing of components that are not in normal use. The service water pumps and strainers are proven operable by their use during normal station operation. The electropotential between the subsurface SWS piping and the ground is measured periodically to verify the effectiveness of the cathodic protection system.

Preoperational testing is described in Chapter 14.0. The performance and structural and leaktight integrity of all cooling water system components is demonstrated by continuous operation.

9.2.1.1.5 Instrumentation Applications

The SWS instrumentation is designed to facilitate automatic operation, remote control, and continuous indication of system parameters.

Local pressure test points and temperature indicators are provided at various components which are served by the SWS to allow checking of system performance. Control valves are provided to control water flow where necessary. The pump discharge header pressure and header pressure downstream of the strainers are indicated in the control room. Pressure downstream of the strainers is alarmed on low pressure.

9.2.1.2 Essential Service Water System

The ESWS removes heat from plant components which require cooling for post fire or post accident safe shutdown of the reactor or following a DBA. The ESWS also provides emergency makeup to the fuel storage pool and component cooling water systems, and is the backup water supply to the auxiliary feedwater system. The ESWS consists of two redundant cooling water trains. The ESWS does not directly interface with radioactive systems.

9.2.1.2.1 Design Bases

9.2.1.2.1.1 Safety Design Basis

The ESWS is safety-related, is required to function following a DBA, and is required to achieve and maintain the plant in a post accident safe shutdown condition.

SAFETY DESIGN BASIS ONE - The ESWS is protected from the effects of natural phenomena, such as earthquakes, tornadoes, hurricanes, floods, and external missiles (GDC-2).

SAFETY DESIGN BASIS TWO - The ESWS is designed to remain functional after an SSE and to perform its intended function following the postulated hazards of fire, internal missile, or pipe break. Failure of any adjacent non-seismic Category I structure will not constitute a hazard to the ESWS (GDC-3 or 4).

SAFETY DESIGN BASIS THREE - Safety functions can be performed, assuming a single active component failure coincident with the loss of offsite power (GDC-44). Components of this system are not shared with other units (GDC-5).

SAFETY DESIGN BASIS FOUR - The active components are capable of being tested during plant operation. Provisions are made to allow for inservice inspection of components at appropriate times specified in the ASME Boiler and Pressure Vessel Code, Section XI (GDC-45 and 46).

SAFETY DESIGN BASIS FIVE - The ESWS is designed and fabricated to codes consistent with the quality group classification assigned by Regulatory Guide 1.26 and the seismic category assigned by Regulatory Guide 1.29. The power supply and control functions are in accordance with Regulatory Guide 1.32.

SAFETY DESIGN BASIS SIX - The capability to isolate components or piping is provided so that the ESWS's safety function are not compromised. This includes isolation of components to deal with leakage or malfunctions and to isolate nonsafety-related portions of the ESWS (GDC-44).

SAFETY DESIGN BASIS SEVEN - The containment isolation valves in the system are selected, tested, and located in accordance with the requirements of GDC-54 and 56 and 10 CFR 50, Appendix J, Type C testing.

SAFETY DESIGN BASIS EIGHT - The ESWS is designed to remove heat from components important to mitigating the consequences of a LOCA or MSLB and to transfer the heat to the ultimate heat sink (GDC-44).

SAFETY DESIGN BASIS NINE - The ESWS operates in conjunction with the component cooling water and other reactor auxiliary components and the ultimate heat sink to provide a means to cool the reactor core and RCS to achieve and maintain a safe shutdown.

SAFETY DESIGN BASIS TEN - The ESWS provides emergency makeup to the fuel storage pool and component cooling water systems, and is the backup water supply to the auxiliary feedwater system.

SAFETY DESIGN BASIS ELEVEN - The ESWS is protected from long term organic fouling and corrosion problems.

9.2.1.2.1.2 Power Generation Design Basis

POWER GENERATION DESIGN BASIS ONE - The ESWS provides sufficient cooling water for removing heat from essential plant equipment over the full range of the normal reactor operation.

9.2.1.2.2 System Description

9.2.1.2.2.1 General Description

The ESWS is shown in Figure 9.2-2 and consists of two separate 100-percent capacity trains of traveling screen pumps, pump prelube storage tanks, self cleaning strainers, piping, valves, and instrumentation. One pump supplies cooling water to each flow path. Each flow path is fed from the ultimate heat sink(refer to Sections 9.2.5 and 3.8.4.1.9.). The essential service water pumps draw water from the ultimate heat sink at a maximum temperature of 95øF and a minimum temperature of 32øF. Each train of the ESWS serves through the associated train of safety-related components. Each train of the ESWS is interconnected with the SWS. Two motor-operated isolation valves are provided in each crosstie header where it connects to the SWS. In addition, cooling water flow is maintained following a DBA to a nonsafety-related air compressor and associated after-cooler. The air compressor is automatically isolated on high flow (indicative of leakage) or it can be remote manually isolated. The ESWS pumphouse equipment locations are shown in Figures 9.2-3 and 9.2-4. To prevent organic fouling of the ESW, chemical addition of liquid microbial control agent is performed during system operation at the ESW pump house. Connections are provided for periodic localized chemical treatment in lines which are normally stagnant or receive low flows.

The water chemistry of the ESWS fluid is given in Table 9.2-17. The carbon steel piping in the ESWS is designed with a corrosion tolerance and the use of piping inspection gauging (PIGing) hardware to assure that there is no long-term degradation of the system. The sections of the ESWS piping that cannot be inspected with PIGing hardware are stainless steel to prevent corrosion through the piping walls and assure that there is no long-term degradation of the system. The components cooled by or supplied with makeup water from the ESWS and their respective heat loads and flow rates are given in Tables 9.2-2 through 9.2-4. The basis for the heat loads and flow rates is given in Tables 9.2-2 through 9.2-4.

The ESWS normally supplies water at a higher pressure than the cooled safety-related component. Therefore, if leakage occurs it is into the system being cooled or, in the case of ESW piping and valves, in the floor drain system described in Section 9.3.3. Once a significant leak is found, an affected item is isolated and repaired.

The essential service water pumps are located in a seismic Category I pumphouse (refer to Section 3.8.4.1.8). Each flow path is protected by interior walls from internally generated missiles, jet impingement, and flooding that may result from failures in adjacent flow path piping. Equipment protection from high winds and floods is discussed in Sections 3.3 and 3.4, respectively. Tornado missile protection is discussed in Section 3.5.2.

To prevent the potentially damaging effects of column closure water hammer to the ESWS, vertical loop piping with high point vacuum breakers and check valves in the service water cross tie are used to reduce the potential for drain down of the ESW. The vertical loop piping is part of the ESW return piping.

9.2.1.2.2.2 Component Description

Codes and standards applicable to the ESWS are listed in Table 3.2-1. The ESWS is designed and constructed in accordance with the following quality group requirements: Containment penetrations are quality group B, the separate and redundant cooling loops for safety-related equipment are quality group C, and lines to other nonessential equipment are quality group D. The quality group B and C portions are seismic Category I. Design data for the ESWS pumps, prelube storage tanks, self-cleaning strainers, piping and valves is provided in Table 9.2-5.

ESSENTIAL SERVICE WATER PUMPS - The two essential service water pumps each have a capacity of 100 percent of the flowrate required during normal operation. These designs exceed the required accident condition flowrate. Pumps are sized to include an additional wear margin on the flow at the design head to accommodate normal degradation of performance due to impeller wear. The pumps are of the vertical centrifugal type. The pump manufacturer performed a full range performance test at the minimum submergence of 8 feet and demonstrated no vortexing or cavitation during the test. These pumps take their suction from the ultimate heat sink.

ESSENTIAL SERVICE WATER PUMP PRELUBE STORAGE TANKS - Each pump is provided with a prelube storage tank. The tank supplies the pump lineshaft bearings with water to prevent the bearings above the pit water level from running dry during startup. Tank size is based on supplying a minimum of a five-minute supply of water, at six gpm, with no makeup from the pump discharge line. When the pump is operating, the bearings are lubricated by the pumped fluid.

ESSENTIAL SERVICE WATER SELF CLEANING STRAINERS - One self cleaning strainer is provided for each essential service water flow path. One hundred percent of the essential service water flow is filtered through 1/16-inch slotted openings in the strainer element. On high differential pressure, the strainer element is automatically backwashed to eject the accumulated debris.

ESSENTIAL SERVICE WATER TRAVELING WATER SCREENS - Two traveling water screens are provided, one per train of the ESWS. Screens are designed for continuous operation to protect the essential service water pump suction from large debris. Screen spray water is provided from the essential service water supply header downstream of the self-cleaning strainer.

AUXILIARY HEAT EXCHANGERS - Tables 9.2-2 through 9.2-4 list the various components in the ESWS and their heat loads and flow requirements. In general, essential service water flows through the tube side, and the cooled fluid flows through the shell side. Further description of these items is included in the referenced sections.

PIPING AND VALVES - Piping within the standard power block is carbon steel except for portions replaced by stainless steel due to erosion or corrosion. Piping to and from the ultimate heat sink and yard piping is carbon steel. Portions of the ESWS that cannot be inspected with PIGing hardware are stainless steel. The design condition for the supply water is 200 psi and 100 °F. The design condition for the return line downstream of the last isolation valve and upstream of flow orifice EF-FO-00021/22 is 130 psi and 200 °F. The design condition between orifices EF-FO-00021/22 and EF-FO-00023/24 is 95 psi and 200 °F. Downstream of flow orifices EF-FO-00023/24, the design condition is 65 psi and 200 °F. Two entirely separate redundant lines are provided and designed to ASME Section III, Class 3, except for containment penetrations which are designed to ASME Section III, Class 2. Nonsafety-related portions of the system are designed to ANSI B31.1.

For the components located inside the containment, supply and return lines are provided with containment isolation valves, as described in Section 6.2.4.

Power-operated valves are provided to permit isolation of nonsafety-related or nonessential service following a DBA.

To mitigate the adverse effects of column closure water hammer following a LOOP, check valves are installed in the service water cross tie connection.

9.2.1.2.2.3 System Operation

POWER GENERATION OPERATION - During normal plant operations, the ESW within the standard power block receives water from the SWS and supplies water to the safety-related components and air compressors. After cooling the equipment, the heated water is returned to the SWS and/or to the Ultimate Heat Sink.

Manual bypass valves are provided around the main outlet isolation valve to the component cooling water heat exchangers. During normal operation, these valves are adjusted for proper flow for safety functions and locked into position, and the main outlet isolation valves are normally closed but can be throttled as needed.

The normal makeup water to the fuel storage pool and component cooling water system is from other plant sources, and the ESWS is only used if the other systems are unable to supply water.

PLANT COOLDOWN AND SHUTDOWN - No changes to the valving arrangement are required from the normal operation to initiate cooldown of the plant. During the cold shutdown condition, various components may be isolated if no heat loads are generated. The source of water is normally from the SWS; however, if offsite power is not available the Class IE ESW pumps will provide the water source.

EMERGENCY OPERATION - Following a DBA, auxiliary feedwater low suction pressure, or loss of offsite power, or safety injection signal, the ESWS is isolated from the SWS by closing the associated motor-operated isolation valves. Following a LOOP, the ESW/SW cross tie check valves reduce the potential for drain down of the ESWS. Both essential service water pumps are automatically started by the emergency diesel load sequencer, and receive power from the preferred power supply or the emergency diesel generators. Pump A starts 20 seconds and pump B 25 seconds after receipt of the SIS. The pumps start immediately upon receipt of auxiliary feedwater low suction pressure. Pump A starts 32 seconds and pump B starts 37 seconds after receipt of a LOOP. The pumps supply cooling water from the ultimate heat sink to the safety-related components and air compressors. The main isolation valves on the component cooling water heat exchanger outlet are automatically closed, to decrease the cooling water flow rate as dictated by the service requirements. After cooling the equipment, the heated water is returned to the ultimate heat sink.

As described in Section 10.4.9, the ESWS will automatically supply water to the auxiliary feedwater system in the event condensate storage tank water is unavailable. In addition, the ESWS provides emergency suction supply to the auxiliary feedwater system (AFS) upon receipt of an engineered safety features actuation signal (ESFAS) initiated by an AFS low suction pressure signal. The low AFS suction pressure signal also provides the open signal to the AFS pump suction supply valves and closes the ESWS/SWS supply isolation valves located at the power block inlet. This assures essential service water supply to the AFS following a SSE without an accompanying accident or LOOP. During this event, operator action is required to realign the ESWS to the ultimate heat sink. Operational procedures ensure realignment of the ESWS to the ultimate heat sink. An allowance of 5 acre-feet loss of UHS volume, equivalent to about 1 hour at maximum ESWS flow, is provided for operator alignment to be performed.

The traveling water screens automatically start with the same signals that start the essential service water pumps. The screens protect the essential service water pumps from large debris. Water is sprayed on the screens to clean debris that may collect on the screens.

The prelube storage tank is continuously supplied with water by a connection on the essential service water pump discharge, downstream of the check valve and self-cleaning strainer. Tank level is automatically maintained by action of the supply line to the pump lineshaft bearings, stuffing box, and the open tank overflow, and by the manual setting of the globe valve in the tank supply line. The tank provides water to the lineshaft bearings and stuffing box continuously during periods when the essential service water pumps are idle. The discharge lines are normally pressurized by the service water pumps. When the essential service water pump is running, flow in the supply line from the tank reverses and discharges through the overflow. If an undetected failure of the SW pumps is assumed, this could result in loss of prelube supply prior to operator action to start the ESW pump. However, the pump will start and continue to run satisfactorily in an emergency situation with dry bearings. Bronze lineshaft bearings are provided in the ESW pumps because of this possibility. The alternate bearing material (cutless rubber) would have a greater tendency to seize during this transient.

The self-cleaning strainers filter the supply water to the power block. High differential pressure caused by accumulated debris on the strainer element is corrected automatically by backwashing the element to the ultimate heat sink. Backwash of the filters may also be initiated manually.

Trash is removed from the essential service water influent by traveling water screens operated as per system operating procedures. The essential service water screens can also be rotated and backwashed manually or automatically. In automatic, the essential service water screens are cleaned whenever the essential service water pumps are running. Any debris on the screens is washed back into the Wolf Creek Lake.

Freeze protection for the ESWS intake structure is provided by a warming line which branches from each essential service water return line. Each warming line can divert a minimum of 4,200 gpm from 12,780 gpm of returning flow, to warm a pump suction flow rate of 14,025 gpm. These flow parameters, in conjunction with a minimum ESW system temperature rise of 0.72F, provided by operating safety related equipment, ensures that frazil ice will not block the trash racks. Following an automatic ESW pump start due to an SIS or loss of off site power, sufficient safety related equipment is automatically started to ensure that the minimum required heat load is available. Following an automatic ESW pump start due to auxiliary feedwater low suction pressure, sufficient heat load is ensured by operational procedures that require containment coolers to be operating when in Modes 3 and above. Operational procedures ensure that the minimum heat load is present prior to manual ESW pump starts. Table 9.2-25 summarizes the minimum ESW heat loads available in terms of equivalent temperature rises at design ESW flow rates for different modes of plant operation. The warming line flow rates will vary as the ESWS returning flow rates vary, and the warming lines are active during ESWS and normal service water system operation. The warming lines will not be in service when the lake is warm to avoid exceeding the ESWS supply design temperature.

The adverse effects of column closure water hammer, following a LOOP, are mitigated in the ESWS by the installation of the vertical pipe loops on both trains of the return piping. In the event of a LOOP vacuum breakers at the high point of the vertical loops mitigate the formation

of column separation in the system by allowing atmospheric air to enter the return piping. Additionally check valves in the service water cross-tie piping close when service water flow is stopped.

9.2.1.2.3 Safety Evaluation

Safety evaluations are numbered to correspond to the safety design bases.

SAFETY EVALUATION ONE - Except for the buried piping between the ESWS pumphouse and the power block, the safety-related portions of the ESWS are located in the reactor, auxiliary, control, diesel, essential service water pump pumphouse, and ESW Vertical Loop Chase buildings. These buildings are designed to withstand the effects of earthquakes, tornadoes, hurricanes, floods, external missiles, and other appropriate natural phenomena. Sections 3.3, 3.4, 3.5, 3.7(B), and 3.8 provide the bases for the adequacy of the structural design of these buildings. The buried piping is also designed to withstand these natural phenomena, as described in Section 9.2.1.2. Each ESWS return line to the UHS has a warming line branch. The warming lines are used to prevent ice from blocking the pump house intake structure as described in section 9.2.1.2. Each ESWS return line in the power block has a vertical loop. The vertical loops are used to mitigate the adverse effects of column closure water hammer as described in 9.2.1.2.2.3.

SAFETY EVALUATION TWO - The safety-related portions of the ESWS are designed to remain functional after a SSE. Sections 3.7(B).2 and 3.9(B) provide the design loading conditions that were considered. Sections 3.5 and 3.6 provide the hazards analyses to assure that post-accident safe shutdown, as outlined in Section 7.4, can be achieved and maintained.

SAFETY EVALUATION THREE - The ESWS services two identical trains of engineered safety features equipment which are required for safe shutdown of the plant. Only one train of the redundant plant components is required for the safe shutdown of the plant after any postulated accident condition. Water is supplied to each train of components by a separate pump and header. No single failure will compromise the system's safety functions.

Both essential service water trains are capable of supplying the required cooling water flows to meet the single failure criterion. All vital power can be supplied from either onsite or offsite power systems as described in Chapter 8.

The single active failure analysis is presented in Table 9.2-6. This provides the basis for the technical specifications with regard to limiting conditions for operation and surveillance.

SAFETY EVALUATION FOUR - The ESWS is initially tested in accordance with the program given in Chapter 14.0. Periodic inservice functional testing is done in accordance with Section 9.2.1.2.4.

Section 6.6 provides the ASME Boiler and Pressure Vessel Code, Section XI requirements that are appropriate for the ESWS.

SAFETY EVALUATION FIVE - Section 3.2 delineates the quality group classification and seismic category applicable to the safety-related portion of this system and supporting systems. Section 9.2.1.2.2.2 shows that the components meet the design and fabrication codes given in Section 3.2. All the power supplies and the control function necessary for safe function of the ESWS are Class IE, as described in Chapters 7.0 and 8.0.

All structures and components of the system are located so that the failure of any non-seismic Category I structure will not constitute a hazard to the ESWS. The location of the ESWS structures and components is such that:

a. Adequate separation from all non-seismic Category I structures is provided.

b. The essential service water lines and Category I electrical duct banks are placed below non-Category I lines at points of intersection except where they cross the non-seismic Category I circulating and warming water lines. In order to prevent possible erosion of the bedding for the duct banks, the non-seismic lines below are surrounded by seismic Category I reinforced concrete encasements. In order to support the ESWS piping from the possible erosion of the bedding if the non-seismic Category I circulating water line ruptured, caissons are used to support the ESWS piping on each side of the circulating water piping. These encasements and caissons are described in Section 3.8.4.1.5.

c. Any hazards to the system from the failure of man-made structures, such as the failure of slopes or the postulated rupture of storage tanks are precluded.

The seismic Category I essential service water pumphouse is located 1,895 feet east and 380 feet south of the centerline of the reactor. The seismic Category I essential service water piping at the discharge point is located approximately 2,505 feet east and 1,260 feet south of the pumphouse (Refer to Figure 9.2-2).

The ESWS pumphouse is designed to withstand the effects of high winds and wave forces and is protected from flooding due to high water levels associated with the probable maximum flood in the cooling lake as described in Sections 3.3 and 3.4.

The essential service water pumps are designed to operate throughout the range of expected water levels in the UHS from 1068 to 1095' - 3" m.s.l.

SAFETY EVALUATION SIX - Section 9.2.1.2.2.1 describes provisions made to identify and isolate leakage or malfunction and to isolate the nonsafety-related portions of the system.

SAFETY EVALUATION SEVEN - Sections 6.2.4 and 6.2.6 provide the safety evaluation for the system containment isolation arrangement and testability.

SAFETY EVALUATION EIGHT - The minimum flow rates required to remove heat from the containment and necessary safety-related components from a postulated LOCA or MSLB and dissipate it to the ultimate heat sink are listed in Table 9.2-3. Determination of these minimum flows is based on a maximum ultimate heat sink temperature of 95 F, as determined in Section 9.2.5. The ESWS design assures that the flow requirements are met by operation of an ESWS pump and proper realignment of the valves to the accident configuration.

Each train of the ESWS and each train of the safety-related systems served by the ESWS are 100 percent redundant. This arrangement ensures that the full-heat dissipating capacity is available following an accident and an assumed single failure.

SAFETY EVALUATION NINE - The minimum ESWS flow rate required to remove decay heat from the RCS and other necessary components to achieve and maintain post accident safe shutdown is listed in Table 9.2-4. The flow rates are based on an ultimate heat sink temperature of 95 F. The ESWS design assures that the flow requirements are met by operation of an ESWS pump and proper realignment of the valves to the accident configuration.

SAFETY EVALUATION TEN - The ESWS is capable of supplying emergency makeup to the fuel storage pool and component cooling water systems and the backup water to the auxiliary feedwater system. The values are listed in Table 9.2-3. The ESWS design assures that the flow requirements are met by operation of an ESWS pump in each train and proper realignment of the associated valves.

SAFETY EVALUATION ELEVEN - The portions of the ESWS which are sensitive to organic fouling, such as heat exchangers, are served the majority of the time by the SWS which is chemically treated. The chemical treatment of the service water mitigates the detrimental effects of organic fouling on the ESWS. The ESWS chemical addition system can be operated during ESW pump tests to provide long term protection to the ESW piping which has very low flow during normal plant operation. During periods of long duration of operation, daily chemical injection rate will be used to treat the overall ESWS.

Cathodic protection of the underground ESWS piping is provided to minimize long term corrosion problems with the soil.

9.2.1.2.4 Tests and Inspections

Preoperational testing is described in Chapter 14.0. The performance and structural and leaktight integrity of all cooling water system components is demonstrated by continuous operation.

The ESWS is testable through the full operational sequence that brings the system into operation for reactor shutdown and for LOCAs, including operation of applicable portions of the protection system and the transfer between normal and standby power sources.

An analog channel operational test of the differential pressure instrumentation for automatic isolation of ESW to the air compressors is performed every 184 days. A channel calibration of the differential pressure instrumentation for automatic isolation of ESW to the air compressors is performed every 18 months during shutdown.

The safety-related components of the ESWS, i.e., pumps, valves, heat exchangers, and piping (to the extent practicable), are designed and located to permit preservice and inservice inspections.

The electropotential between the subsurface ESWS piping and the ground is measured periodically to verify the effectiveness of the cathodic protection system.

9.2.1.2.5 Instrumentation Applications

The ESWS instrumentation, as described on Tables 9.2-7 and 9.2-8, is designed to facilitate automatic operation and remote control of the system and to provide continuous indication of system parameters. Redundant controls are provided to initiate the start of the ESWS and to isolate it from the SWS upon receipt of an SIS and/or loss of offsite power. Redundant and independent power supplies for pump controls and instrumentation are provided from Class IE busses. Refer to Chapter 8.0. Indicating and alarm devices for the system are provided in Tables 9.2-7 and 9.2-8.

Thermowells and pressure indicator connections are provided where required for testing and balancing the system. Portable ultrasonic flow indicators are utilized for initial balancing of the flows in the system and for verifying flows during plant operation.

9.2.2 COOLING SYSTEM FOR REACTOR AUXILIARIES

The cooling system for the reactor auxiliaries is the component cooling water system (CCWS). The CCWS provides cooling water to selected essential and non-essential components during normal plant operation, including shutdown, and also provides cooling water to several engineered safety feature systems (ESFS) during a LOCA or MSLB. During an emergency cold shutdown CCWS provides cooling to essential components in containment. This system is a closed loop system which serves as an intermediate barrier between the SWS or ESWS and potentially radioactive systems in order to eliminate the possibility of an uncontrolled release of radioactivity.

9.2.2.1 Design Bases

9.2.2.1.1 Safety Design Basis

Portions of the CCWS are safety related and are required to function following a DBA and to achieve and maintain the plant in a post-accident safe shutdown condition.

SAFETY DESIGN BASIS ONE - The CCWS is protected from the effects of natural phenomena, such as earthquakes, tornadoes, hurricanes, floods, and external missiles (GDC-2).

SAFETY DESIGN BASIS TWO - The CCWS is designed to remain functional after a SSE and to perform its intended function following the postulated hazards of fire, internal missile, or pipe break (GDC-3 and 4).

SAFETY DESIGN BASIS THREE - Safety functions can be performed, assuming a single active component failure coincident with the loss of offsite power (GDC-44).

SAFETY DESIGN BASIS FOUR - The active components are capable of being tested during plant operation. Provisions are made to allow for inservice inspection of components at appropriate times specified in the ASME Boiler and Pressure Vessel Code, Section XI (GDC-45 and 46).

SAFETY DESIGN BASIS FIVE - The CCWS is designed and fabricated to codes consistent with the quality group classification assigned by Regulatory Guide 1.26 and the seismic category assigned by Regulatory Guide 1.29. The power supply and control functions are in accordance with Regulatory Guide 1.32.

SAFETY DESIGN BASIS SIX - The capability to isolate components or piping is provided so that the CCWS's safety function is not compromised. This includes isolation of components to deal with leakage or malfunctions and to isolate nonsafety-related portions of the system (GDC-44).

SAFETY DESIGN BASIS SEVEN - The containment isolation valves in the system are selected, tested, and located in accordance with the requirements of GDC-54 and 56 and 10 CFR 50, Appendix J, Type C testing.

SAFETY DESIGN BASIS EIGHT - The CCWS is designed to remove heat from components important to mitigating the consequences of a LOCA or MSLB and to transfer the heat to the essential service water system (GDC-44).

SAFETY DESIGN BASIS NINE - The CCWS, operating in conjunction with the RHR, chemical and volume control systems, and the water systems, provides a means to cool the reactor core and primary systems to achieve and maintain post accident safe shutdown.

SAFETY DESIGN BASIS TEN - The CCWS, in conjunction with the Essential Service Water System (ESWS), provides sufficient heat energy to maintain the ESWS inlet trash racks from being blocked with frazil ice.

9.2.2.1.2 Power Generation Design Bases

POWER GENERATION DESIGN BASIS ONE - The CCWS provides a continuous supply of cooling water during plant power generation operation to those auxiliary components in which the potential for radioactive leakage exists.

POWER GENERATION DESIGN BASIS TWO - The system is designed to allow for pump maintenance without interruption of the cooling function.

9.2.2.2 System Description

9.2.2.2.1 General Description

The CCWS is shown in Figure 9.2-15. The system consists essentially of two separate 100-percent-capacity trains which serve engineered safety features, and includes a loop, common to both trains. The common loop consist of the non-essential radwaste and essential containment loads. The radwaste isolation valves automatically close upon low level in the surge tank, SIS, or high flow and the containment loads are isolated after a CISB. The safety related containment loop services essential loads such as the excess letdown heat exchanger (Section 7.4) and the RCP thermal barrier cooling coils (section 5.4.1).

The major components of the system are two component cooling water heat exchangers, four CCWS pumps, two surge tanks, a chemical addition tank, piping, valves, controls, and instruments. The components cooled by the CCWS and their respective CCWS heat loads and flow rates are given in Tables 9.2-9 through 9.2-11. The basis for the heat loads and flow rates is given in the appropriate section referenced in Tables 9.2-9 through 9.2-11.

9.2.2.2.2 Component Description

Codes and standards applicable to the CCWS are listed in Tables 3.2-1 and 9.2-12. The component cooling water system is designed and constructed in accordance with the following quality group requirements: Containment penetrations are quality group B, the separate and redundant cooling loops for engineered safety features equipment are quality group C, and lines to other equipment are quality groups C and D. The quality group B and C portions are seismic Category I.

COMPONENT COOLING WATER HEAT EXCHANGERS - Component cooling water heat exchangers are of the horizontal shell and straight tube type. The tube side is supplied with water from the service water or the ESWS, and the shell side is supplied with water from the discharge of the component cooling water pump. The overall heat transfer coefficient for the CCW HX during post-LOCA conditions is 192 Btu/hr-ft^2-°F approximately. The post-accident peak containment pressure and temperature was determined by assuming a constant CCW inlet temperature of 130°F to the RHR HX, which envelops the maximum CCW temperature expected during the accident conditions.

COMPONENT COOLING WATER PUMPS - Each of the four component cooling water pumps has a capacity of 100 percent of the flowrate required during normal operation. This exceeds the required accident condition flowrate. The pumps are of the horizontal, centrifugal type. Pumps are sized to include an additional 5-percent margin on the flow at the design head to accommodate normal degradation of performance due to impeller wear.

Flooded suction is ensured by surge tanks. Each safety-related component cooling water train has two 100-percent capacity pumps. The two pumps in each component cooling water train are powered by the same Class IE bus; however, only one pump per train is automatically started upon receipt of an SIS or loss of offsite power signal.

The installation of two 100-percent capacity pumps per train is provided only to avoid a shutdown which would otherwise be required by the technical specifications during prolonged maintenance or repair of component cooling water pump.

SURGE TANKS - One safety-related component cooling water surge tank is provided in each of the two safety-related CCW trains to accommodate volumetric changes in the system due to thermal transients or leakage. Provisions are included for automatic makeup to the system from the demineralized water storage and transfer system.

CHEMICAL ADDITION TANK - One nonsafety-related CCWS chemical addition tank is provided with connections to both of the surge tanks. Provisions for demineralized makeup water and addition of the chemicals are included.

AUXILIARY HEAT EXCHANGERS - Tables 9.2-9 through 9.2-11 list the various components in the CCWS and their heat loads and flow requirements. In general, component cooling water flows through the shell side, and the potentially radioactive liquid flows through the tube side. Further description of these items is included in the referenced sections.

PIPING AND VALVES - Piping to and from the CCW heat exchangers is of carbon steel. Portions of the piping have been replaced with stainless steel to prohibit erosion/corrosion. The valves, which when open permit component cooling water to flow into or return from the nonsafety-related portion of the CCWS, are designed to fail closed. These valves automatically close upon low level in the surge tank, SIS, or high flow (indicative of a break in the nonsafety-related portion of the system). Additionally, a supply header flow restricting orifice and two return header check valves prevent a break in the non-safety related portion of the system from compromising the safety related portion.

Component cooling water inlet valves to the RHR heat exchanger are motor operated and fail as is. These valves are automatically opened at the start of the post-LOCA recirculation phase.

For the components located inside the containment, supply and return lines are provided with containment isolation valves, as described in Section 6.2.4. For the reactor coolant pump thermal barriers, a separate return header arrangement is utilized to isolate primary coolant in-leakage to the component cooling water system in the event of a rupture in the thermal barrier. This header has its own containment penetration and automatic isolation valves. A CIS-B automatically closes the normally open motor-operated containment isolation valves. The normally closed (with power lockout) parallel sets of containment isolation valves may be opened in an emergency by the operator to establish cooling water to the Reactor Coolant Pumps (RCPs) and the excess letdown heat exchanger when the normal valve can not be recovered from its closed (single failure) position. These valves are not credited for operation under LOCA or MSLB conditions as reflected in USAR Section 3.11(B), Table 3.11(B)-3 because; (1) no single failure can disable both means of cooling the RCP seals (CCW cooling to the thermal barrier or seal injection), (2) the excess letdown flow path is not required post LOCA or post MSLB and (3) the valves are closed with power lockout preserving the integrity of their containment penetration.

A separate source of emergency makeup is provided from the ESWS to each train of the CCWS.

9.2.2.2.3 System Operation

GENERAL - The entire CCWS is a closed-cycle system; cooling water is continuously recirculated through the system by the CCWS pumps. Heat is dissipated from the system by the flow of service water or essential service water through the tube side of the component cooling water heat exchangers. A component cooling water heat exchanger shell side bypass arrangement in conjunction with throttling of ESW Valves maintains the minimum CCW temperature at 35°F or above, during cold service water conditions.

Following a Safety Injection Signal, the bypass valve closes, thereby forcing all the CCW flow through the CCW heat exchanger. These additional flows will cause the CCW temperature to fall below 35°F depending upon the lake water temperature, but will not impact the safety function of the CCW system or components.

The essential service water and service water systems are described in Section 9.2.1. Supply of normal makeup water to the system is provided from the demineralized water storage tank.

The water in the CCWS is analyzed periodically for pH, conductivity, and corrosion-inhibitor concentration. The specifications which apply to CCWS chemistry are given in the WCGS Chemistry Specification Manual. Abnormal chemistry is corrected by eliminating the source and by draining water from the system, as required, and adding makeup water to the surge tank. Periodic addition of water to the CCWS is required to make up for losses due to system leakage and sampling. For control of long-term corrosion, corrosion inhibitors are added, as required, via the chemical addition tank. The level indication on the surge tank and the rate of water addition will alert the operator of any abnormal leakage from the system. In addition, the floor drain system described in Section 9.3.3 provides additional detection capabilities. Once a significant leak is found, the affected item will be isolated and repaired.

Radiation monitors are installed to monitor the water in each CCWS train to indicate radioactivity leaking into the system. Alerted to radioactive inleakage, the operator may identify the leaking component by selective isolation of heat exchangers and determination of the rate of increase of CCW radioactivity at the component while the suspect component remains isolated. Once the source is determined, the component may remain isolated until repaired. A high radiation signal will automatically close the surge tank vent and the makeup water valve.

The excess letdown heat exchanger, Reactor Coolant Drain Tank Heat Exchanger, RCP seal thermal barrier and RCP motor bearing cooler are located inside the containment. Cooling is provided to the excess letdown heat exchanger for emergency cold shutdown operations or to maximize the normal cooldown rate. The chemical and volume control system injection path to the RCP seals is a totally diverse cooling means to the CCW supply. The reactor coolant pump motor bearings are qualified for 10 minutes of operation without cooling water. Pump operation can be terminated or the cooling water can be established within 10 minutes. The parallel-series valve arrangements for the containment penetrations ensure that CCW can be supplied to the containment, considering any single active failure. Redundant safety-related indication of CCW flow to components located inside the containment is provided on the MCB. A low flow alarm is also provided in the control room.

POWER GENERATION OPERATION - The system is normally operated with one pump on one of the safety-related CCWS trains supplying the associated safety-related train and essential containment loads in the common loop. The redundant safety-related CCWS train is isolated from the remainder of the system, and the CCWS pumps in that train are not operated. Should an operating pump fail, a low-pressure switch in the pump discharge header will start the standby pump in

the same train automatically after a 4-second delay. Also, an interlock is provided to start a CCWS pump when the corresponding centrifugal charging pump of the same train in the chemical and volume control system is started. In this mode, the maximum CCWS supply water temperature to plant components should not exceed 105° F. Cooling water flow through the fuel pool cooling heat exchangers normally exists as needed during periods when spent fuel is stored in the pool except for a short time (approx. 4 hours) following ECCS switchover to recirculation post-LOCA. Additionally, cooling water flow to the fuel pool cooling heat exchangers is the preferred method during normal operation of assuring that the CCWS pump minimum flow of 3000 gpm is met for each train of the CCWS. In this mode of operation, heat absorbed by the CCWS is dissipated to the SWS.

PLANT COOLDOWN AND SHUTDOWN - During the plant cooldown phase following initiation of normal plant shutdown, if a 20-hour cooldown capability is desired, both CCWS trains are placed in operation since flow through both RHR heat exchangers is required. An additional CCWS pump is started in the train which is supplying the other auxiliary loads, such as those associated with the chemical and volume control system, to assist in providing the necessary cooling flow. The plant may be brought safely to the cold shutdown condition with one RHR heat exchanger in operation, but this would require more than 20 hours.

The evaluated conditions for a 20-hour cooldown of the plant use 90□F cooling lake water. Under these conditions CCWS equilibrium temperature at the CCWS heat exchanger outlet may rise to 120□F, after initiation of the CCW flow to the RHR heat exchanger (approximately 4 hours after shutdown). Under these evaluated conditions, CCW flow to the Fuel Storage Pool Heat Exchanger is reduced or terminated. Flow is resumed prior to the FSP temperature reaching 170□F or approximately 8 hours after shutdown when CCWS duty is low enough to accommodate the fuel storage pool load. If the heat loads are less, colder cooling water is used, or the cooldown occurs later in time than the evaluated conditions, then a reduction in CCW flow to a FSP Heat Exchanger may not be necessary. Cycle-specific decay heat analysis and administrative controls ensure that the maximum pool thermal loading limit is not exceeded.

During periods of plant cold shutdown for maintenance or refueling operations following the plant cooldown phase, one of the trains of the CCWS may be shut down, and one of the RHR heat exchangers may be taken out of service. At least one CCWS pump and one RHR heat exchanger are required to be in operation during cold shutdown to remove decay heat from the reactor coolant system. Cooling water flow through the fuel pool cooling heat exchangers is also required to cool spent fuel. In this mode of operation, heat absorbed by the CCWS is dissipated to the service water system.

EMERGENCY OPERATION - Upon receipt of a safety injection signal (SIS), the isolation valves for the nonseismic Category I CCWS loop are closed automatically, and one of the pumps in the non-operating, safety-related CCWS train is started. Component cooling water flows through normally open valves to the seal coolers for

the residual heat removal pumps and to the oil coolers for the centrifugal charging pumps and safety injection pumps. Upon a loss of offsite power, any operating CCWS pump stops, and two pumps, one in each train, start in accordance with the standby diesel generator loading sequence (see Chapter 8.0).

At the initiation of the post-LOCA recirculation phase, Component Cooling water flow is automatically initiated through the residual heat removal heat exchangers by the opening of normally closed, motor-operated valves at the inlets to the heat exchangers and closing of outlet valves associated with the fuel storage pool heat exchanger. This establishes a cooling water flow to remove heat from the containment sump water which is flowing through the residual heat removal system. After 4 hours, the flow may be resumed to the fuel storage pool heat exchanger.

The complete switchover sequence is described in Section 6.3. In the emergency mode of operation, the two cooling trains are normally operated in a parallel configuration. Remotely operated isolation valves are provided to permit complete separation of the two trains.

In the event that an emergency cold shutdown (CSD) must be achieved using only safety-related systems and components, the CCW system can withstand a single active failure and still remove heat from components important to achieving and maintaining post accident safe shutdown. These components include the reactor coolant pump thermal barrier and motor bearings, seal water return heat exchanger, excess letdown heat exchanger, RHR heat exchanger, and fuel storage pool cooling heat exchanger.

9.2.2.3 Safety Evaluation

Safety evaluations are numbered to correspond to the safety design bases in Section 9.2.2.1.

SAFETY EVALUATION ONE - The safety-related portions of the CCWS are located in the reactor, auxiliary, and fuel buildings. These buildings are designed to withstand the effects of earthquakes, tornadoes, hurricanes, floods, external missiles, and other appropriate natural phenomena. Sections 3.3, 3.4, 3.5, 3.7(B), and 3.8 provide the bases for the adequacy of the structural design of these buildings.

SAFETY EVALUATION TWO - The safety-related portions of the CCW system are designed to remain functional after a SSE. Sections 3.7(B).2 and 3.9(B) provide the design loading conditions that were considered. Sections 3.5 and 3.6 provide the hazards analyses to assure that a safe shutdown, as outlined in Section 7.4, can be achieved and maintained.

SAFETY EVALUATION THREE - The CCWS is completely redundant and, as indicated by Table 9.2-13, no single failure will compromise the system's safety functions. All vital power can be supplied from either onsite or offsite power systems, as described in Chapter 8.0.

SAFETY EVALUATION FOUR - The CCWS is initially tested with the program given in Chapter 14.0. Periodic inservice functional testing is done in accordance with Section 9.2.2.4.

Section 6.6 provides the ASME Boiler and Pressure Vessel Code, Section XI requirements that are appropriate for the CCW system.

SAFETY EVALUATION FIVE - Section 3.2 delineates the quality group classification and seismic category applicable to the safety-related portion of this system and supporting systems. Table 9.2-10 shows that the components meet the design and fabrication codes given in Section 3.2. All the power supplies and control functions necessary for safe function of the CCW system are Class IE, as described in Chapters 7.0 and 8.0.

SAFETY EVALUATION SIX - Section 9.2.2.2 describes provisions made to identify and isolate leakage or malfunction and to isolate the nonsafety-related portions of the system.

SAFETY EVALUATION SEVEN - Sections 6.2.4 and 6.2.6 provide the safety evaluation for the system containment isolation arrangement and testability.

SAFETY EVALUATION EIGHT - The minimum component cooling water flow rates required to remove heat from the reactor coolant system during and after a postulated LOCA are listed in Table 9.2-11.

Determination of these minimum flows includes the assumption of the highest anticipated component cooling water temperature.

The CCWS design assures that at least these minimum flows are achieved by the system in its accident configuration, i.e., one pump per train in operation and the nonseismic Category I CCW loop isolated. The system is shifted into the accident configuration upon receipt of an SIS signal which starts a pump in each train and isolates the nonessential flow paths. The CCWS flow to the RHR heat exchanger is automatically initiated as the RHR heat exchanger (primary side) is placed in service at the start of the recirculation mode. The CCWS heat is dissipated to the ESWS, as discussed in Section 9.2.1. The CCWS and each of the safety-related systems served by the CCWS are 100-percent redundant. This arrangement ensures that full-heat dissipating capacity is available following a LOCA and an assumed single failure.

SAFETY EVALUATION NINE - The minimum CCWS flow rates required to remove decay heat from the RCS during and following achieving post accident safe shutdown are listed in Table 9.2-10. Flow instrumentation indications and alarms are identified in Table 9.2-14. Determination of these minimum flows includes the assumption of the highest anticipated component cooling water temperature. The CCWS heat is dissipated to the ESWS or SWS, as discussed in Section 9.2.1. The CCWS design assures that the flow requirements are met by operation of a CCWS pump and -proper realignment of the associated valves.

SAFETY EVALUATION TEN - As described in Section 9.2.1.2.2.3 and Table 9.2-25, the CCWS supports the ESWS by providing part of the heat energy needed to maintain the ESWS inlet trash racks from being blocked with frazil ice.

9.2.2.4 Tests and Inspections

Preoperational testing is described in Chapter 14.0. The performance and structural and leaktight integrity of all cooling water system components is demonstrated by continuous operation.

The CCWS is testable through the full operational sequence that brings the system into operation for reactor shutdown and for LOCAs, including operation of applicable portions of the protection system and the transfer between normal and standby power sources.

-The safety-related components of the CCWS, i.e., pumps, valves, heat exchangers, and piping (to the extent practicable) are designed and located to permit preservice and inservice inspections.

9.2.2.5 Instrumentation Applications

The CCWS instrumentation was designed to facilitate automatic operation and remote control of the system and to provide continuous indication of system parameters.

High flow switches in the return lines from each reactor coolant pump thermal barrier cooling coil will initiate the rapid closure of isolation valves to isolate the applicable reactor coolant pump in the event of a leak in the thermal barrier.

Control room indication of surge tank levels keeps the operator informed of any leakage into or out of the CCWS. Actuation of the surge tank makeup valves is a-utomatically initiated by the low level switch. The low-low level switch will automatically isolate the nonseismic Category I part of the nonsafety-related train from the system.

A radiation detection system is provided in each CCWS train to alarm abnormally high radioactivity which would be indicative of

inleakage from one of the components. High radiation will isolate the CCWS surge tank vent in the affected flow train to prevent escape of radioactivity prior to isolation of the leak.

Thermowells and pressure indicator connections are provided where required for testing and balancing the system. Flow indicator taps are provided at strategic points in the system for initial balancing of the flows in the system and for verifying flows during plant operation.

Table 9.2-14 summarizes CCWS alarms and indications of status, temperature, flow, etc.

9.2.3 DEMINERALIZED WATER MAKEUP SYSTEM

The demineralized water storage and transfer system (DWSTS) stores water for use upon demand for makeup within the plant. The DWSTS receives filtered and demineralized water from the demineralized water makeup system (DWMS). For reactor makeup water, a degasifier removes oxygen from the demineralized water as it is transferred. The effluent from several systems which process waste, which can be recycled within the plant, are passed through the DWSTS degasifier before being transferred to the reactor makeup water storage tank (RMWST).

9.2.3.1 Design Bases

9.2.3.1.1 Safety Design Bases

The DWSTS serves no safety function and has no safety design basis.

9.2.3.1.2 Power Generation Design Bases

The Make Up Demineralized System (WM) is supplied by either the John Redmond Reservoir or the Service Water System.

POWER GENERATION DESIGN BASIS ONE - The DWSTS and DWMS maintain chemistry specifications required by the plant components. Actual water chemistry specifications are located in the WCGS Chemistry Specification Manual. The demineralized water makeup system shall produce a final effluent that meets the following water quality requirements as a minimum:

pH at 25 C.	6.0 to 8.0 Specific
Cation Conductivity	less than 1.0 micro-siemens/cm
Sodium	less than 0.010 ppm
Silica	less than or equal 0.1 ppm
Suspended Solids	less than or equal 0.1 ppm
Total Solids	less than 0.5 ppm
Chloride and Floride	less than or equal 0.1 ppm
Potassium	less than 0.01 ppm
Aluminum	less than 0.02 ppm
Calcium	less than 0.02 ppm
Magnesium	less than 0.02 ppm

POWER GENERATION DESIGN BASIS TWO - The DWSTS provides demineralized water to the equipment and systems shown in Table 9.2-15. The demineralized water makeup system shall provide reactor quality water for preoperational tests, hydrostatic tests, startup, restarts and normal operation.

POWER GENERATION DESIGN BASIS THREE - The DWSTS's capacity is sufficient to supply the anticipated normal makeup demand in any 24-hour period.

POWER GENERATION DESIGN BASIS FOUR - The demineralized water storage tank (DWST) has sufficient storage capacity to augment the condensate and reactor makeup water storage facilities so that a 3-day supply of normal anticipated makeup demand to both the secondary and the primary systems is maintained.

POWER GENERATION DESIGN BASIS FIVE - The DWSTS degasifies selected processed in-plant liquid waste and supplies it to the reactor makeup system with less than 0.1 ppm dissolved oxygen.

9.2.3.2 System Description

9.2.3.2.1 General Description

The DWSTS is shown in Figure 9.2-16. The system consists of one demineralized water storage tank, two 100-percent system capacity transfer pumps (connected in parallel), one degasifier, and associated piping, valves, controls, and instrumentation. Check valves are provided to preclude backflow from the demineralized water transfer system to the demineralized water storage tank, assuring that contamination of the source is precluded.

Water normally is supplied to the Demineralized Water Makeup System from the Service Water System (Figure 9.2-1) via a cross-tie with the raw water supply from the John Redmond Reservoir (Figure 9.2-5 sheet 2). The raw water system provides an alternate supply source if the Service Water System is not available.

Demineralized water makeup equipment located inside the Shop Building has been retired-in-place.

Demineralized water makeup to the DWST is supplied by a vendor owned and operated water treatment system located in the Water Treatment Building North. The system is capable of providing up to 400 gpm of deaerated, demineralized water continuously.

The wastewater stream from the vendor water treatment system normally is discharged to the Wolf Creek cooling lake from a sump in the Water Treatment Building North. A wastewater line from the building sump is routed to the Wastewater Treatment Recirculation Pump discharge line which discharges to the lake via the Circulating Water Outfall. A back-up wastewater discharge line is routed to the Wastewater Treatment Facility via the TDS pump discharge.

The piping, pumps, vessels, and other equipment associated with the demineralized water makeup system are constructed of corrosion-resistant materials that prevent contamination of the demineralized water.

Section 3.6 provides an evaluation demonstrating that the pipe routing of the DWSTS is physically separated from essential systems to the maximum extent practicable. Protection mechanisms that may be required are also discussed in Section 3.6.

Samples may be taken from the discharge of the demineralized water transfer pumps. Chemical specifications for the demineralized water are given in Table 9.2-16 for the services indicated in Table 9.2-15.

9.2.3.2.2 Component Description

The DWSTS is designed and constructed in accordance with quality group D specifications.

DEMINERALIZED WATER STORAGE TANK - The demineralized water storage tank is a covered, vented, and insulated tank constructed of stainless steel and located outdoors. The tank has both a fixed roof and an internal floating roof. The stainless steel floating roof reduces the absorption of atmospheric oxygen into the water. Freeze protection is provided by external steam heating coils and tank insulation. The capacity of the tank is 50,000 gallons.

DEMINERALIZED WATER TRANSFER PUMPS - The pumps are constant speed, electric motor-driven, vertical, centrifugal pumps. All parts in contact with the pumped fluid are stainless steel. The two pumps are connected in parallel with common suction and discharge lines.

DEGASIFIER - The degasifier consists of a level control valve, degasifier tank with integral 300-gallon storage section, two 100-percent system capacity, degasified water transfer pumps, and two 100-percent design capacity vacuum pumps. All parts in contact with the demineralized water are stainless steel, with the exception of the piping which is saran-lined and the degasifier column packing which is polypropylene.

9.2.3.2.3 System Operation

The water treatment vendor has the responsibility for operation and maintenance of equipment provided under contract. A control signal is provided from the DWST level switches for automatic control of the demineralized water supply to the tank.

A low-low level switch trips the demineralized water transfer pumps to prevent loss of suction. High and low tank level alarms are provided in the main control room. Tank level indication is provided locally and in the main control room. The tank can be bypassed, if necessary.

The level indication read in the control room on the DWST and an imbalance of water addition versus controlled water discharge will indicate any abnormal leakage from the system. In addition, the floor drain system described in Section 9.3.3 provides additional detection capabilities.

The reactor makeup water system (described in Section 9.2.7) must receive deaerated water to meet the chemistry specifications. Aerated plant waste streams which are recycled must pass through the degasifier. The DWST can be used as a source of makeup to the primary side water inventory once the other sources are exhausted.

The flowrate of water to the degasifier is automatically controlled by the throttling of the inlet control valve in proportion to the degasifier column level. Degasification is accomplished by the spraying of the degasifier influent over the column packing while the column is maintained under vacuum. Vacuum is maintained by one of two centrifugal, oilsealed vacuum pumps. An alternate source of vacuum is via the Condenser Vacuum Pumps. The vacuum pump exhaust is combined with the exhaust of the condenser air removal system so that it is discharged directly to the unit vent. Two 100-percent system capacity degasified water transfer pumps supply the reactor makeup water system on a demand basis.

9.2.3.3 Safety Evaluation

The DWSTS serves no safety-related function.

9.2.3.4 Tests and Inspections

Preoperational testing is described in Chapter 14.0.

The operability, performance, structural and leaktight integrity of all system components are demonstrated by continuous operation.

The demineralized water makeup system was subjected to preoperational tests in order to ensure operability, reliability, and integrity of the system. Portions of the systems can be isolated during normal station operation to permit testing and maintenance.

9.2.3.5 Instrumentation Applications

All instrumentation required for operation of the water treatment system is included with the vendor equipment installed in the Water Treatment Building North. A remote common trouble alarm is provided from the vendor system to the main control room to indicate a system malfunction.

Local and control room indication of DWST level is provided. A local pressure gauge and control room low pressure alarm are provided for the demineralized water transfer pump header. The low pressure switch does not start the standby pump. The degasifier tank has a level gauge and local and control room high and low level alarms.

9.2.4 POTABLE AND SANITARY WATER SYSTEM

The domestic water system (DoWS) provides chlorinated potable water for drinking and cooking, and for showers and toilet facilities within the standardized power block. Refer to Section 9.3.3 for the sanitary water system.

9.2.4.1 Design Bases

9.2.4.1.1 Safety Design Bases

The potable and sanitary water systems serve no safety function and have no safety design basis.

9.2.4.1.2 Power Generation Design Bases

POWER GENERATION DESIGN BASIS ONE - The potable and sanitary water systems provide potable water supplies and sewage treatment necessary for normal station operation, shutdown periods, and the construction period. A chlorinated, pressurized source is provided to adequately meet the requirements of all outlets.

POWER GENERATION DESIGN BASIS TWO - The potable and sanitary water system is designed so that there are no interconnections with systems which might contain radioactivity. In addition, the branches with outlets in areas where a radioactive hazard exists are designed with backflow-prevention capability to ensure that radioactive contamination cannot enter the system.

POWER GENERATION DESIGN BASIS THREE - The sanitary waste water treatment system effluent shall meet the quality standards required by the Kansas State Department of Health and Environment.

9.2.4.2 System Description

9.2.4.2.1 General Description

The potable water system is supplied from RWD #3 by the Melvern lake processing plant. A 70,000 gallon storage tank is filled directly from the incoming RWD #3 line. A pump skid takes water from this tank and supplies the main water line for the plant site. The potable water system is shown on Figure 9.2-5a.

The DoWS is shown in Figure 9.2-17. The system consists of hot water storage heaters and the necessary interconnecting valves and piping. The treated water supply is provided from outside the power block, as described in Section 9.2.4. Potable water is delivered to all points in the plant by way of the domestic water distribution piping system.

Hot water at 140 F is supplied from a branch of the system, using thermostatically controlled heaters. This system serves shower and other domestic fixtures.

The system is designed to provide quantities of water adequate to enable proper functioning of the plumbing fixtures in all parts of the plant.

No cross connections exist between the DoWS and any radioactive or potentially radioactive system. All cross connections to a non potable source or a potable source that has a different supply will be governed by the KDHE minimum standards. In addition, the main header serving these areas is provided with a reduced pressure backflow preventer device. Hot water supply and recirculation lines connected to the main hot water storage heater do not serve such areas.

Protection against pollution from any equipment which takes water from the DoWS but uses this water for purposes other than drinking, cooking, or washing is provided by passing the flow supplying such equipment through air gaps or a backflow prevention device of the reduced-pressure zone type.

Section 3.6 provides an evaluation demonstrating that pipe routing of the DoWS is physically separate from essential systems, to the maximum extent practicable. In addition, the floor drain system described in Section 9.3.3 provides leakage detection capabilities to assure that any abnormal leakage is detected and repaired.

The sewage lagoon is of the non discharging type and is designed to evaporate all the liquid and store the solid residue for the remainder of plant design life.

9.2.4.2.2 Component Description

The DoWS was designed in compliance with the Wisconsin Administrative Code, Section H62.13 and H62.14, the Uniform Plumbing Code, and the Occupational Safety and Health Standards (OSHA), Sections 1910.141 and 1910.151, dated October 18, 1972. Future designs shall be in compliance with the Kansas State Department of Health and Environment, the Uniform Plumbing Code, (UPC) and the Occupational Safety and Health Standards (OSHA), Sections 1910.141 and 1910.151.

HOT WATER HEATERS - Two 200 gallon electric water heaters are provided as the main source of heated water for the DoWS. These heaters supply hot water to the main shower and toilet areas and to other plumbing fixtures, outlets, and equipment requiring domestic hot water service in the auxiliary, and control buildings. The design hot water supply temperature is 140°F. The hot water heaters are designed to prevent the hot water supply temperature from exceeding 145°F for all flow rates and operating conditions.

The remote toilet locations in the north and south ends of the turbine building which require hot potable water are not supplied by the main hot water branch but are provided with local electric water heaters.

VALVES - Pressure relief valves are provided on the hot water heaters. Isolation valves are provided for each fixture to permit local shutoff. Pressure-reducing valves are provided, as necessary, to maintain fixture supply pressure at or below 65 psig. An expansion tank of approximately 50 gallon is provided on the outlet header of the heaters to accomodate thermal expansion of the water.

PIPING - All DoWS piping is copper with copper or bronze fittings. This will prevent the introduction of objectionable tastes, odors, discoloration, and toxic conditions into the system. The piping system conforms to the provisions of the applicable local, state, and national plumbing codes.

9.2.4.2.3 System Operation

The potable and sanitary water system receives potable water from RWD #3. A 70,000 gallon tank is filled directly from the incoming RWD #3 line. A pump skid takes water from this tank and supplies the main water line for site buildings. The DoWS uses this water and automatically supplies water when an intermittent demand is created at an outlet. Hot water at 140 F is maintained automatically by hot water heaters for distribution on a demand basis.

Sanitary wastes collected by the sewage system are discharged into a Non Discharging Sewage Lagoon. The Non Discharging Sewage Lagoon is designed to operate at normal rate of 10,000 gallons of sewage per day and a maximum rate of 20,000 gallons of sewage per day. Sewage sludge is stored in the bottom of the lagoon.

9.2.4.3 Safety Evaluation

Since no safety-related functions are performed by these systems, a safety evaluation is not required.

9.2.4.4 Tests and Inspections

Preoperational testing is discussed in Chapter 14.0. Proper operation of the various components is verified by satisfactory use.

9.2.4.5 Instrumentation Application

Instrumentation is not required for the potable and sanitary water systems. However, thermostats, high temperature limit switches, temperature gauges, pressure relief devices, and pressure gauges are installed on the hot water storage heaters in the DoWS.

9.2.5 ULTIMATE HEAT SINK

9.2.5.1 Design Bases

The ultimate heat sink (UHS) meets the following design bases:

9.2.5.1.1 Safety Design Basis

SAFETY DESIGN BASIS ONE - The UHS provides a reliable source of cooling water to dissipate the heat of an accident safely and to achieve and maintain safe shutdown of one nominal 3579 $MW_{(th)}$ unit following a DBA (GDC-44).

SAFETY DESIGN BASIS TWO - The UHS supplies emergency makeup water to the fuel storage pool and component cooling water systems, and is the backup water supply for the auxiliary feedwater system.

SAFETY DESIGN BASIS THREE - The UHS provides sufficient water volume and cooling capability to shut down and cool down one nominal 3579 $MW_{(th)}$ unit and to maintain it in a post-accident safe shutdown condition.

SAFETY DESIGN BASIS FOUR - The UHS was designed to withstand, without loss of function, the most severe natural phenomena, including seismic events such as the safe shutdown earthquake (SSE).

SAFETY DESIGN BASIS FIVE - The UHS was designed to withstand postulated site-related events, such as loss of the main cooling lake.

9.2.5.1.2 Power Generation Design Basis

POWER GENERATION DESIGN BASIS ONE - The UHS at Wolf Creek serves to dissipate heat generated during plant operation.

9.2.5.2 System Description

9.2.5.2.1 General Description

The UHS for the Wolf Creek Generating Station consists of a normally submerged Seismic Category I cooling pond. The UHS is formed by providing a volume of 455 acre-feet with no sedimentation behind a Seismic Category I dam built in one finger of the main cooling lake. The water surface elevation of the UHS (the UHS dam crest) is 1070 msl feet. The normal cooling lake elevation is 1087 msl feet and

cooling lake low water elevation is 1075 msl feet. The main cooling lake, main dam, saddle dams, and control structures are designed for stability under drawdown, OBE, and probable maximum flood conditions.

Availability of water at the intakes to the essential service water system pumps is assured by location of the UHS adjacent to the Seismic Category I essential service water system pumphouse. The essential service water intake structure and discharge point are described in Section 3.8.

UHS cooling water chemistry analysis is provided for information in Table 9.2-17.

9.2.5.2.2 Heat Loads

Analysis of the UHS is based on the total heat dissipation requirements assuming a design-basis LOCA or shutdown using UHS. In the event Wolf Creek undergoes a loss of offsite power (LOOP), the heat rejection rates are assumed essentially equal to those of a LOCA.

Heat is rejected to the UHS directly or indirectly via the ESW system following a LOCA or shutdown from the four sources, namely, (1) containment air coolers, (2) residual heat removal system, (3) station auxiliary systems, and (4) fuel storage pool.

Tabulated below are the maximum heat rejection rates for the specified time intervals, taken from Figures 9.2-6A and 9.2-19.

	Normal Shutdown (10^6 Btu/hr)	LOCA (10^6 Btu/hr)
0 to 1 hour	73	495
1 hour to 10 hours	299	357
10 hours to 1 day	184	169
1 day to 3 days	116	136
3 days to 15 days	103	113
15 days to 30 days	43	82

The above figures represent heat from all sources, including heat from sensible heat, fission product and heavy element decay, heat from the station auxiliary systems, and heat due to pump work.

9.2.5.2.2.1 Heat Load Following a LOCA

Heat rejected to the UHS following a LOCA is based on the assumption the two ESW trains are in operation for the entire 30 days. Following a postulated LOCA, the two ESW trains are used to remove heat from the containment via four containment air coolers and two residual heat removal heat exchangers. Heat rejected to the UHS via the containment air coolers and the residual heat removal system is based upon the results of the containment pressure/temperature analysis using full capacity of the containment heat removal system as described in Table 6.2.1-3 of Section 6.2.1.

Figures 9.2-6A and 9.2-18 provide the heat load to the UHS as a function of time for 30-day period following a LOCA. In Figure 9.2-6A, the curved line represents the analyzed heat curve which is the summation of the heat rejection to the UHS from the following sources:

a. Containment air coolers (Figure 9.2-6B)

b. Residual heat removal system (Figure 9.2-6C)

c. Station auxiliary systems, and

d. Fuel storage pool.

The heat rejection rates actually used in the analysis of the UHS are also shown in Figure 9.2-6A by the dashed line approximation to the analyzed curve.

Heat rejection rates from the containment air coolers and the residual heat removal system as shown in Figure 9.2-6B and 9.2-6C are obtained from the results of the containment pressure/temperature analysis using full capacity of the containment heat removal system as described in Section 6.2.1. The average heat rejection rate of the station auxiliary systems listed in Table 9.2-19 following a LOCA is 43.8×10^6 Btu/hr and is assumed to remain constant over a 30-day period. The heat load from the fuel storage pool cooling system is described in Section 9.1.3. Cooling to the fuel storage pool is assumed to be lost for the first 4 hours following a postulated LOCA.

The average heat load during the 30-day period following a LOCA is 86.8×10^6 Btu/hr. The total integrated heat released for the 30-day period is 62.5×10^9 Btu from the following:

a. Total integrated heat released from the containment air coolers and the residual heat removal system is 22.2×10^9 Btu.

b. For the station auxiliary systems, the heat rejection rate after a LOCA is 43.8×10^6 Btu/hr and is taken as constant over the 30-day period. Thus, total integrated heat released by the station auxiliaries is 31.5×10^9 Btu.

c. The average decay heat load from the fuel storage pool cooling system is 12.2 x 10^6 Btu/hr. For a 30-day period, the total integrated heat due to fuel storage pool cooling is 8.8 x 10^9 Btu. This includes loads from the auxiliary equipment in the fuel pool heat removal system.

d. Therefore, total heat rejection to the UHS is 62.5 x 10^9 Btu.

9.2.5.2.2.2 Heat Loads Following Shutdown Using UHS

Figures 9.2-19 and 9.2-20 provide the heat load as a function of time for a normal plant cooldown. The average heat load per unit during the 30 days following a plant cooldown is 57.5 x 10^6 Btu/hr. The total integrated heat load for the 30-day period is 41.4 x 10^9 Btu.

Heat rejected to the UHS following a shutdown is based on the following assumptions.

a. Two-train RHR operation for the initial 20 hours at which time the unit is in cold shutdown condition.

b. Diesel generators are shut down after 7 days when off-site power becomes available.

c. Two ESW trains in operation for the entire period.

The heat rejection rate of the station auxiliary sytems is listed in Table 9.2-20 is 29.8 x 10^6 Btu/hr/train and is assumed to be constant for the first 23 hours. After 23 hours, the heat loads are assumed to be 20.4 x 10^6 Btu/hr/train and after 7 days when the diesel generator load is discontinued (because off-site power becomes available again), the heat load is assumed to be 3.6 x 10^6 Btu/hr/train. The total integrated heat released by the station auxiliaries for 30 days is 11.6 x 10^9 Btu.

The heat load from the fuel storage pool cooling system is assumed to be constant at a maximum rate of 2.9 x 10^6 Btu/hr/train. The total integrated heat released by the fuel storage pool for 30 days is 4.18 x 10^9 Btu. This is the load expected at the end of the operating cycle which corresponds to the largest total heat loads from all sources.

9.2.5.2.3 Emergency Makeup Water Requirement

Power block emergency makeup water requirements are given in Figures 9.2-21 and 9.2-22. It includes total makeup for the systems described below.

The makeup water required to supply the auxiliary feedwater system when the condensate storage tank is unavailable or exhausted, is based on system operation as described in Section 10.4.9.

Makeup water required to replace evaporative losses from the fuel storage pool is based on system operation, as described in Section 9.1.3 and Table 9.1-4. Makeup water may also be required to replace evaporative losses or minor leakage from the component cooling water system.

9.2.5.2.4 Component Description

A design comparison of the UHS to the positions of Regulatory Guide 1.27 is provided in Table 9.2-21.

9.2.5.2.5 System Operation

The capacity of the UHS is sufficient to provide cooling for the required period of 30 days with no makeup water under both normal and accident-mode operating conditions. The UHS is assumed to supply cooling water to the essential service water system (ESWS) at a rate of 30,000 gpm for the entire 30-day period for this analysis. The UHS has sufficient capacity to supply emergency makeup water to the fuel storage pool and component cooling water systems and to serve as the backup water supply for the auxiliary feedwater system. The UHS also has sufficient capacity to allow up to 140 gpm of continuous losses throughout the 30 day period from leakage from the ESWS conponents and other system components which would be supplied makeup from the ESWS during accident conditions. At the start of the analysis, the UHS was assumed to have lost a volume of 155 acre-feet due to sediment.

The UHS design assures that the design-basis temperatures of safety-related equipment are not exceeded at the flow rates outlined above. The design-basis temperature of water supplied to the plant is 95°F.

9.2.5.3 Safety Evaluation

SAFETY EVALUATION ONE - The UHS is capable of providing enough cooling water for a post-accident safe shutdown and for continued cooling of the reactor for 30 days following an accident.

The UHS water supply is sufficient to meet the design-basis plant heat rejection rates based on UO2 fuel as described in 9.2.5.2.2.

The design basis heat load for the UHS is tabulated in Section 9.2.5.2.2. Section 9.2.5.3.1 provides a safety evaluation which demonstrates that the UHS capacity is sufficient for a 30-day supply of cooling water at a maximum temperature of 95 F, assuming maximum engineered safety feature operation with minimum heat transfer coefficient, as described in Section 6.2.1. This is based on maximum heat load and the most severe-meteorological conditions.

SAFETY EVALUATION TWO - The minimum UHS reserve requirement to provide emergency makeup water to the fuel storage pool and component cooling water systems and backup water to the auxiliary feedwater system is provided in Figures 9.2-21 and 9.2-22. Section 9.2.5.3.1 provides the safety evaluation which demonstrates that the UHS has an adequate capacity to meet these needs.

SAFETY EVALUATION THREE - All Seismic Category I requirements are satisfied by the UHS. Cut slopes of the UHS and intake channel and the UHS dam embankment are designed for stability under end-of-construction, steady-state, drawdown, and SSE conditions. In addition, the UHS will withstand the unlikely event of a breach of the main dam and subsequent rapid drawdown. The UHS dam embankment structure will withstand overflow conditions that would result if the main cooling lake were to be drawn down below the UHS dam crest elevation.

9.2.5.3.1 UHS Analysis

FLOWAVE, a computer program developed by the Tennessee Valley Authority (TVA) and modified by S&L, was used for unsteady flood routing. This unsteady flow model is discussed in Subsection 2.4.4.2.2. The theoretical discharge and depth at the cross section of the Main Dam were computed as outlined by Stoker (Ref. 2) and used in Case I. The discharge computed was for the instantaneous complete failure of the cooling lake Main Dam and hence conservative. In Case II, a similar approach was used for the instantaneous failure of the Baffle Dike 'A' in front of the UHS. The flood wave was routed through the cooling lake in both cases. Figures 9.2-11 and 9.2-12 show the transient average

velocities through the cross section at the UHS Dam location for Cases I and II, respectively. From these figures, the maximum average velocity for Cases I and II are 7.6 and 9.5 feet per second, respectively.

During the unlikely postulated total loss of the main cooling lake dam and baffle dike 'A', the slopes and crest of the UHS dam will be subjected to a flow of water over the crest. Adequate erosion protection has been provided for the upstream and downstream slopes as well as for the crest of the dam. The techniques for the design of rock sections for overtopping were presented by Olivier (Ref. 1). A series of laboratory tests were made with various sizes of stones to develop parameters for different flow rates. The test results were applied to the design of the UHS dam slope protection. Following the criteria that the filter and riprap materials satisfy the quality requirements of concrete aggregates as given in ASTM C-33 and in accordance with the guidelines established in the Corps of Engineers publication entitled "Stability of Riprap and Discharge Characteristics, Overflow Embankments, Arkansas River, Arkansas" (Ref. 3) the riprap is a well-graded material with the following gradations:

Maximum Size Weight:	3200 pounds
85% Size Weight:	1500 to 2200 pounds
50% Size Weight:	190 to 400 pounds
15% Size Weight:	25 to 50 pounds
Minimum Size Weight:	5 pounds

The basic criteria or conditions for the UHS dam are quite similar to those experienced and investigated in the Corps of Engineers publication (Ref. 3). The side slopes used in their study, 4 horizontal to 1 vertical, are the same as those for the UHS dam. The duration of the overtopping is approximately equal in both cases. The gradation for the riprap for the UHS dam was made to compare to the A-gradation used by the Corps. The UHS dam riprap is twice as thick as that used by the Corps (4 feet as opposed to 2 feet), and is complimented by two 18-inch filters consisting of a fine filter and a coarse filter. The maximum average water velocity expected over the UHS dam is less than 10 fps, while the Corps had experienced velocities as high as 13 fps.

By examining various flow conditions over the UHS dam which take the tailwater elevation downstream and the headwater elevation upstream 250 feet from the crest of the dam (in contrast to the 100-foot distance used by the Corps), the riprap was found to be in the stable region for nonaccesstype embankments with a gradation of A-1 as shown in Army Corps of Engineers Plate 48 (Ref. 3). This A-1 gradation performed similarly to the A-gradation, as described in the Corps of Engineers publication (Ref. 3).

The riprap material is 4 feet thick, measured perpendicular to the slopes of the embankment. The filter material (coarse and fine beddings) to be placed under the riprap was designed according to the criteria established in Subsection 2.5.6.4.1.4.2. Based on these criteria, the following gradation sizes were required for the filter material:

Coarse Filter		Fine Filter	
Sieve	%Passing	Sieve	%Passing
4 inch	100	3/4 inch	100
3 inch	85-100	1/2 inch	90-100
1 1/2 inch	55-85	3/8 inch	70-100
3/4 inch	30-65	No. 10	20-65
3/8 inch	10-30	No. 30	8-35
No. 4	0-15	No. 50	3-15
No. 10	0-3	No. 200	0-5

Each of the coarse and fine bedding layers is 18 inches thick, measured perpendicular to the side slopes. Details of the riprap and filter are shown on Figures 2.5-116 and 2.5-117.

The design water level of the UHS and crest of the cohesive embankment of the UHS Dam is at elevation 1070 and the elevation of the top of riprap is at elevation 1077. As shown in Figure 2.5-116, the riprap extends into the abutment to the point where natural grade is at elevation 1077. Therefore, any flow below elevation 1077 will be through areas protected by filter bedding and riprap.

The abutments are protected with adequate riprap and filter as described above and hence will not be eroded during the postulated overflow conditions.

The UHS design was based upon adverse hydrological and meteorological conditions. The maximum temperature and maximum evaporation periods for recorded weather conditions were considered in sizing of the UHS. Selection of the critical weather periods was based upon a computer analysis (UHSAVG) of meteorological data for a 16-year period which included a severe drought, estimated to have a recurrence interval of 50 years. A weather tape scan of surface weather data for Chanute, Kansas, and of precipitation data for Iola, Kansas, for the period of 1949-1964 was performed. These data included the historic drought years of 1952-1957.

The 16-year weather data were used to evaluate water surface temperatures and evaporation rates for a prescribed rate of heat rejection from the surface of the UHS. The worst evaporation period was obtained by selecting the weather conditions corresponding to the 30 consecutive days for which evaporation

loss was maximum. The worst temperature period was obtained by saving the conditions for the 5 consecutive days, 1 day, and 30 consecutive days resulting in highest average water temperature after which these three periods were combined in the indicated order to produce a synthetic 36-day worst-weather period.

The maximum evaporative and temperature periods were determined to have the following dates:

Maximum Evaporation Period

Worst 30 days: June 24, 1954 to July 23, 1954

Maximum Temperature Period

Worst 5 days: June 30, 1949 to July 5, 1949
Worst 1 day: July 2, 1949 (Noon) to July 3, 1949 (Noon)
Worst 30 days: July 16, 1951 to August 15, 1951

For the above listed weather periods, ultimate heat sink draw-down and plant inlet temperatures were evaluated as a function of time using a computer model (LAKET-5) which predicts the transient response of the heat sink to external conditions.

Heat rejection rates were taken as those corresponding to a LOCA or Normal shutdown with UHS in one unit employing UO_2 fuel. In this mode of operation, a total UHS flow of 30,000 gpm is assumed. In addition, it was assumed that all of the water in the UHS was at 90°F at the start of this analysis. This temperature is conservative since prior transient analysis of the main cooling lake, with one unit operating and an annual average load factor of 100% showed that the main cooling lake surface temperatures at the locations of the UHS were not in excess of 87.7°F. Because the UHS is submerged, actual UHS temperatures will be less than 87.7°F.

From evaluation of the UHS computer analysis, the maximum plant inlet (UHS outlet) temperature occurring during the worst temperature period is predicted to be 95°F. The plant inlet temperature was usually well below 95°F, as evidenced by the average temperature over the entire period being slightly below 90°F and 95% of the time below 94°F.

The maximum drawdown under worst evaporative conditions, including water loss due to lake seepage, was found to be approximately 1.65 feet from the initial elevation of 1070 feet. This corresponds to a decrease in UHS volume of about 39% of the volume existing at the start of the accident. At this point the UHS water level is at 1068.35 feet, and the UHS has already provided the required 390,000 gallons of emergency makeup water to the fuel storage pool and component cooling water systems, back-up to the auxiliary feedwater system, and 140 gpm of ESWS losses throughout the 30 days. The UHS thus has the capability for the safe plant shutdown in the event of postulated LOCA or shutdown using the UHS, assuming extreme evaporative conditions. Results obtained for the heat sink inlet and outlet temperatures are shown in Figure 9.2-7 for the worst temperature period drawdown and in Figure 9.2-10 for worst evaporation conditions.

Technical Specifications allow the UHS water temperature to exceed the limiting 90 °F design-basis temperature provided that the level of the main cooling lake is equal to or greater than 1075 feet msl (i.e. the main cooling lake dam is intact) and the UHS temperature does not exceed 94 °F. An additional evaluation, reference 4, was performed that assumes the main dam and water control structures for the lake will remain intact during a LOCA, the initial lake temperature could be as high as 94 °F, and credit is taken for the volume of water directly above the UHS, up to 1075 feet msl. The maximum lake temperature following the most severe DBA, will remain below the accident analysis temperature of 95 °F. Conservative projections of previous studies, assuming the main dam is not intact (i.e., the lake water elevation is at the UHS dam elevation of 1070 feet msl) and the initial water temperature is 94 °F results in UHS temperatures rising above 95 °F for short periods of time. Administrative tube plugging limits have been established for the emergency diesel generator (EDG) heat exchangers that are based on an intake cooling water temperature of 96 °F. Consequently, there are no adverse affects on EDG operation. Other equipment operation abnormalities are not expected from a slight room temperature excursion if it were to occur.

Availability of water in UHS is not affected by failure of makeup lines to, or blowdown lines from, the main cooling lake during the required 30-day period, since a substantial quantity of water has been shown to remain in the UHS even under extreme evaporative conditions.

Dredging of the UHS will be performed whenever necessary to maintain a minimum capacity and adequate flow to the ESWS pumps. Sedimentation is discussed in more detail in Section 2.4.11.

9.2.5.4 Tests and Inspections

The UHS is inspected periodically to determine degree of siltation. See Section 2.4.11.6 for a further discussion of siltation.

The UHS dam will be monitored periodically as discussed in Section 2.5.6.8.4, and in every 5 year verification that the crest of the UHS dam below the rip rap cover is at or above elevation 1070 Mean Sea Level, USGS datum is performed.

9.2.5.5 Instrument Application

See Sections 2.4.11.6 and 2.5.5.

9.2.6 CONDENSATE STORAGE AND TRANSFER SYSTEM

The condensate storage and transfer system (CSTS) consists of one 450,000-gallon condensate storage tank (CST), one non-safety-related auxiliary feedwater pump (NSAFP), and associated valves and piping. The CST serves as a reservoir to supply or receive condensate, as required by the condenser hotwell level control system. The tank is also a nonseismically designed source of water to the auxiliary feedwater system. The NSAFP provides a diverse backup to the motor driven auxiliary feedwater pumps (MDAFPS) and turbine driven auxiliary feedwater pump (TDAFP), but is not credited for accident mitigation.

9.2.6.1 Design Bases

9.2.6.1.1 Safety Design Bases

The CSTS serves no safety function and has no safety design basis.

9.2.6.1.2 Power Generation Design Bases

POWER GENERATION DESIGN BASIS ONE - The minimum usable volume of the CST provides sufficient water to the suction of the auxiliary feedwater pumps to: a) remove decay heat to maintain hot standby for 4 hours and b) to remove decay heat and sensible heat to cool down the reactor to 350 F.

POWER GENERATION DESIGN BASIS TWO - CSTS permits periodic testing of the auxiliary feedwater pumps.

POWER GENERATION DESIGN BASIS THREE - The gross capacity of the CST is sufficient to fill the condensate system, feedwater system, and the steam generators.

POWER GENERATION DESIGN BASIS FOUR - The CSTS is designed to limit the dissolved oxygen in the CST to less than 0.1 ppm.

9.2.6.2 System Description

9.2.6.2.1 General Description

The CSTS is shown in Figure 9.2-23. The system consists of one CST, one NSAFP and associated piping, valves, controls, and instrumentation. Section 3.6 provides an evaluation that demonstrates that the pipe routing of the CSTS is physically separated from the essential systems to the maximum extent practicable. Protection mechanisms that may be required are also discussed in Section 3.6.

A sample is periodically taken from the makeup line to the condenser hotwell for analysis to assure that the quality of the water stored in the CST meets the chemical specifications given in Table 9.2-16 for the services indicated in Table 9.2-22.

9.2.6.2.2 Component Description

Codes and standards applicable to the CSTS are listed in Table 3.2-1. The system is designed and constructed in accordance with quality group D specifications.

CONDENSATE STORAGE TANK - The CST is a covered, insulated tank constructed of stainless steel. The tank has both a fixed roof and an internal floating roof. The floating roof prevents the absorption of atmospheric oxygen into the water and is constructed of stainless steel. The tank is located outdoors. Freeze protection is provided by thermal insulation and external steam heating coils. The capacity of the tank is 450,000 gallons.

NON-SAFETY AUXILIARY FEEDWATER PUMP – The NSAFP is driven by an AC-powered electric motor supplied with power from the Station Blackout Diesel Generators (SBO DGs), as described in Section 8.3.1.1.1.3. Any two of the three non-safety related 3.25 MW SBO DGs provide sufficient power to the NSAFP motor for starting and running the NSAFP at full system load. The NSAFP is a 10-stage horizontal centrifugal pump that takes suction from the non-safety-related condensate storage tank (CST) and discharges to the Auxiliary Feedwater System (AFS) downstream of the turbine-driven auxiliary feedwater pump (TDAFP). Pump design capacity includes manually controlled minimum flow recirculation back to the CST.

9.2.6.2.3 System Operation

The supply of demineralized water makeup to the CST is manually or automatically controlled by the tank level. In automatic operation, low and high tank level signals cycle a control valve in the line from the demineralized water makeup system. Level HILO and Level LOLO 1 alarms in the main control room are provided by CST level instrumentation. Also, a Level LOLO 2 alarm is provided by the Auxiliary Feedwater System pump suction pressure instrumentation. Tank level indication is provided in the main control room.

The level indication of the CST and an imbalance of water addition versus controlled water discharge will alert the operator of any abnormal leakage from the system. In addition the floor drain system described in Section 9.3.3 provides additional detection capabilities. Section 3.6 demonstrates that a storage tank failure would have no detrimental effect on safety-related structures or equipment.

Deaeration of the CST during initial startup operations can be accomplished via the main condenser. The tank contents circulate to the deaerating hotwell of the condenser and are pumped back to the CST by a condensate pump. At low plant loads and at startup, the condenser spargers aid in the deaeration process. Nitrogen sparging of the CST can also be performed to reduce dissolved oxygen levels both during power operations and during refueling outages.

Overflow of the CST is directed to the secondary liquid waste system, as described in Section 9.3.3. Isolation valves are provided for all lines which penetrate the tank, with the exception of the overflow. The minimum volume required for auxiliary feedwater is 281,000 gallons.

During normal operation, the CSTS contains no radioactive contaminants. In the event of primary-to-secondary system leakage due to a steam generator tube leak, it is possible for the CST contents to become radioactively contaminated. A discussion of the

radiological aspects of primary-to-secondary leakage is included in Chapter 11.0.

When the auxiliary feedwater system is started, the condensate storage tank provides a clean source to feed to the steam generators. If during emergency operation the condensate storage tank is unavailable or exhausted, emergency backup water is automatically supplied from the essential service water system, as described in Section 10.4.9.

The function of the NSAFP is to provide an alternate source of cooling water to the steam generators through the Auxiliary Feedwater System. The NSAFP and SBO DGs will be manually aligned as deemed necessary.

9.2.6.3 Safety Evaluation

The CSTS serves no safety-related function.

9.2.6.4 Tests and Inspections

Preoperational testing is described in Chapter 14.0. The performance, structural, and leaktight integrity of all system components is demonstrated by continuous operation. Technical Specification requires monitoring of volume.

9.2.6.5 Instrumentation Applications

Control room indication of CST level is provided. A nominal minimum tank temperature of 50 F is maintained automatically by steam heating coils. A temperature control valve is provided to supply steam in response to actual tank temperature. A continuous steam flow is maintained to the heating coils during plant winterization via the temperature control valve bypass line. This ensures that the condensate return lines will not freeze.

9.2.7 REACTOR MAKEUP WATER SYSTEM

The reactor makeup water system (RMWS) stores deaerated water to be used upon demand for primary makeup within the plant. The RMWS receives filtered, deaerated, demineralized water from the demineralized water storage and transfer system.

9.2.7.1 Design Bases

9.2.7.1.1 Safety Design Bases

Except for an associated containment penetration, the RMWS is not a safety-related system.

SAFETY DESIGN BASIS ONE - The containment isolation valves in the system are selected, tested, and located in accordance with the requirements of 10 CFR 50, Appendix A, General Design Criteria 54 and 56, and 10 CFR 50, Appendix J, Type C Testing.

9.2.7.1.2 Power Generation Design Bases

POWER GENERATION DESIGN BASIS ONE - The reactor makeup water storage tank (RMWST) is designed to meet peak demands from the RCS in conjunction with the design makeup requirements for the fuel storage pool and the refueling pool. The peak demand from the RCS is experienced when the plant is going to cold shutdown at approximately 80-percent core life, with 200 ppm boron in the reactor coolant system, with no control rods, and with equilibrium xenon, followed by a startup. The design makeup requirement for the fuel storage pool and the refueling pool is based on a pool temperature of 125 F.

POWER GENERATION DESIGN BASIS TWO - The reactor makeup water transfer pumps are designed to deliver 120 gpm to the boric acid blending tee, which is equivalent to the maximum letdown flow from the reactor coolant system. These pumps are also designed to deliver 150 gpm, as an alternate source, for cooling the contents of the pressurizer relief tank from 200 F to 120 F in one hour following a pressurizer safety valve discharge.

POWER GENERATION DESIGN BASIS THREE - The RMWS is designed to supply high quality degasified water to minimize corrosion in the systems supplied and which is compatible with the RCS water chemistry.

9.2.7.2 System Description

9.2.7.2.1 General Description

The RMWS, shown in Figure 9.2-13, consists of one storage tank, two transfer pumps and a tank steam coil heater, and the associated piping, valves, and instrumentation.

The RMWST receives water from the demineralized water system.

The RMWS tank is provided with a diaphragm which is continuously in contact with the tank water surface. This prevents absorption of gases which would lower the water quality below that necessary

for use as reactor makeup water. The reactor makeup water chemistry specifications are given in Table 9.2-16.

Overpressure/overflow protection for the RMWST is provided by a loop seal which drains to the waste holdup tank in the liquid radwaste system. The RMWST level is maintained above a specified minimum by manual replenishment from the demineralized water system.

The water temperature in the tank is maintained above freezing by an automatically controlled heater system. The heater system consists of steam coils wrapped around the outside of the reactor makeup water storage tank. Steam to these coils is provided by the auxiliary steam system and is controlled automatically to maintain the tank contents above a nominal 50 F temperature. A continuous steam flow is maintained to the heating coils during plant winterization via the temperature control valve bypass line. This ensures that the condensate return lines will not freeze.

The reactor makeup water transfer pumps, taking suction from the RMWST, are employed for various makeup and flushing operations throughout the nuclear steam supply system auxiliaries, the radwaste systems, and the fuel pool cooling and cleanup system. Table 9.2-23 gives a summary of the reactor makeup water requirements.

A sample connection is provided to allow periodic analysis of the RMWST contents.

The pipe routing of the RMWS is physically separated from essential systems, to the maximum extent practicable.

9.2.7.2.2 Component Description

The containment penetration associated with the RMWS is designed and constructed to quality group B and seismic Category I requirements. The balance of the system is designed and constructed in accordance with quality group D specifications.

REACTOR MAKEUP WATER STORAGE TANK - The tank is covered, vented, and insulated and is constructed of stainless steel. The tank is located outdoors. The tank contains a diaphragm and loop seal to maintain airtight integrity. Freeze protection is provided by external steam heating coils. The usable capacity of the tank is 126,000 gallons.

REACTOR MAKEUP WATER TRANSFER PUMPS - The pumps are 100-percent system capacity, inline centrifugal type and are driven by constant speed electric motors. All parts in contact with the pumped fluid are stainless steel. The two pumps are connected in parallel with common suction and discharge lines.

9.2.7.2.3 System Operation

In order to maintain the RMWST at a specified minimum water level, water from the demineralized water system is manually supplied to the RMWST by opening the air-operated supply valve. If the RMWST is out of service, this demineralized water supply can be manually transferred to the suction of the reactor makeup water transfer pumps.

The RMWS is normally kept at pressure by operating one of the two pumps in the run mode. Thus, reactor makeup water is available upon demand. The second pump is kept in the auto mode and will start upon low pressure in the discharge header or on demand from the reactor makeup water control system (RMWCS). Once automatically started, the additional pump is manually stopped when the surge demand has passed. The RMWCS is used to maintain proper boron concentration in the reactor coolant system and the preset level in the volume control tank by supplying makeup water to the boric acid blending tee.

The reactor makeup water transfer pumps are also operated locally and from the main control room to supply, as required, makeup and flush water to the various systems given in Table 9.2-23. These operations require manual actuation of the valves normally isolating the various connections to the given systems.

A recirculation line from the reactor makeup water transfer pump discharge to the RMWST is provided to protect the pumps during periods of system operation when there is little or no demand from the systems normally being supplied. This maintains the system in a ready state for any of the automatic demands.

Grab samples may be taken from the RMWST for analysis to assure that the quality of this makeup meets the chemical specifications for service in the RCS, as given in Table 9.2-16. If the reactor makeup requires purification, it can be recirculated through the demineralized water until the water chemistry is within specifications.

The level indication on the RMWST and an imbalance of water addition versus controlled water discharge will alert the operator of any abnormal leakage from the system. In addition, the floor drain system described in Section 9.3.3 provides additional detection capabilities.

In the event of a LOCA, the containment must be isolated as described in Section 6.2.4. The containment penetration associated with reactor makeup water has a check valve, inside the containment, and a power-operated valve which automatically closes on a CIS-A, outside the containment.

9.2.7.3 Safety Evaluation

Except for an associated containment penetration, the RMWS is not a safety-related system.

SAFETY EVALUATION ONE - Sections 6.2.4 and 6.2.6 provide the safety evaluation for the system containment isolation arrangement and testability.

9.2.7.4 Tests and Inspections

Preoperational testing is discussed in Chapter 14.0.

The operability, performance, and structural and leaktight integrity of all system components is demonstrated by continuous operation.

9.2.7.5 Instrumentation Applications

Instrumentation is provided to measure the water level in the reactor makeup water storage tank and to give the main control room indication and annunciation of high and low levels. Level-control instrumentation is provided to stop the pumps on tank low-low level.

Instrumentation is provided to measure the water temperature in the reactor makeup water storage tank and to give the main control room indication as well as annunciation of high and low temperatures. Temperature-control instrumentation is provided to initiate and terminate the auxiliary steam supply to the heater coil. A continuous steam flow is maintained to the heating coils during plant winterization via the temperature control valve bypass line. This ensures that the condensate return lines will not freeze.

Local pressure indicators are provided for the suction and discharge of the reactor makeup water transfer pumps.

Instrumentation is provided to measure the pressure in the common discharge line of the reactor makeup water transfer pumps, to give the main control room indication and annunciation of low system pressure, and to start the backup pump to maintain system pressure.

9.2.8 CLOSED COOLING WATER SYSTEM

The closed cooling water system (ClCWS) receives heat from the turbine building miscellaneous plant equipment and rejects it to the service water system.

9.2.8.1 Design Bases

9.2.8.1.1 Safety Design Bases

The ClCWS serves no safety function and has no safety design basis.

9.2.8.1.2 Power Generation Design Bases

POWER GENERATION DESIGN BASIS ONE - The ClCWS provides corrosion-inhibited, demineralized cooling water to the equipment shown in Table 9.2-24.

POWER GENERATION DESIGN BASIS TWO - During power operation, the ClCWS operates to provide a continuous supply of cooling water, at a maximum temperature of 105 F, to turbine plant equipment, with a service water inlet temperature of 90 F.

POWER GENERATION DESIGN BASIS THREE - The system is designed to permit the maintenance of any single active component without interruption of the cooling function.

POWER GENERATION DESIGN BASIS FOUR - Makeup to the system can be provided at a rate of 5 percent of the closed cooling water flow.

POWER GENERATION DESIGN BASIS FIVE - The surge tank is sized to provide at least 30 seconds of active storage.

9.2.8.2 System Description

9.2.8.2.1 General Description

The ClCWS is shown on Figure 9.2-14. The system consists of one surge tank, one chemical addition tank, two pumps, two heat exchangers (connected in parallel), and associated piping, valves, controls, and instrumentation. Heat is removed from the ClCWS, via the closed cooling water heat exchanger, by the service water system, which is described in Section 9.2.1.1.

A sample is periodically taken for analysis to assure that the water quality meets the chemical specifications given in the WCGS Chemistry Specification Manual for the services indicated in Table 9.2-24.

9.2.8.2.2 Component Description

The ClCWS is designed and constructed in accordance with quality group D specifications.

CLOSED COOLING WATER SURGE TANK - The closed cooling water surge tank is covered, vented, and constructed of carbon steel. The tank is located in the turbine building. Demineralized water make-up is provided by a mechanical level control valve. The capacity of the tank is 866 gallons.

CLOSED COOLING WATER CHEMICAL ADDITION TANK - The closed cooling water chemical addition tank is constructed of carbon steel. Provisions for make-up water and addition of the chemicals are included. The tank is located in the turbine building. The capacity of the tank is 75 gallons.

CLOSED COOLING WATER PUMPS - The pumps are constant speed, electric motor-driven, horizontal centrifugal pumps. The two pumps are connected in parallel with common suction and discharge lines. The pumps operate at approximately 1062 gpm.

CLOSED COOLING WATER HEAT EXCHANGERS - The closed cooling water heat exchangers are of horizontal shell and straight tube design. The tube side is supplied with service water, and the shell side is supplied with closed cooling water. The surface area is based on normal heat load.

9.2.8.2.3 System Operation

During normal power operation, one of the two 100-percent-capacity closed cooling water pumps circulates demineralized water through the shell of one of the two 100-percent-capacity closed cooling water heat exchangers. In the closed cooling water heat exchanger, heat is rejected to the service water passing through the tubes.

Cooling water flow rate to the electrohydraulic control (EHC) coolers, steam generator feed pump turbine lube oil coolers, and generator exciter air cooler is regulated by automatic control valves. Control valves in the cooling water outlet from these units are throttled in response to temperature signals from the fluid being cooled. Cooling water flow rate to the steam generator feed pump hydraulic power unit coolers is regulated by automatic control valves in the cooling water inlet.

The flow rate of cooling water to all of the other coolers is manually regulated, by individual throttling valves located on the cooling water outlet from each unit.

The closed cooling water surge tank is connected to the pumps' suction and is located at a relatively high elevation in the system to provide ample suction head for the pumps. The surge tank also provides a reservoir for small amounts of leakage from the system and for the expansion and contraction of the cooling fluid with changes in the system temperature.

Demineralized water makeup to the ClCWS is controlled automatically by a level control valve which is actuated by sensing surge tank level. A corrosion inhibitor is manually added to the system.

9.2.8.3 Safety Evaluation

The ClCWS does not serve a safety-related system.

9.2.8.4 Tests and Inspections

Preoperational testing is described in Chapter 14.0. The performance, structural, and leaktight integrity of all system components is demonstrated by continuous operation.

9.2.8.5 Instrument Applications

Local indication of closed cooling water surge tank level is provided. Surge tank low and high level alarms are provided in the control room via the plant computer. Each pump discharge contains a pressure gauge.

Pressure indicator connections are provided where required for testing and balancing the system. Flow indicator taps are provided at strategic points in the system for initial balancing of the flows and for verifying flows during plant operation.

9.2.9 REFERENCES

1. Olivier, H., "Through and Overflow Rockfill Dams - New Design Techniques," Proceedings of the Institute of Civil Engineers, Paper No. 7012, Vol. 36, March 1967.

2. Stoker, J.J., 1957, Water Waves: Interscience Publishers, New York, p. 333-513.

3. U.S. Army Corps of Engineers, "Stability of Riprap and Discharge Characteristics, Overflow Embankments, Arkansas River, Arkansas," Publication No. 2-650, June 1964.

4. SLWC-0588, Sargent & Lundy Letter, "Transmittal of Final Results of UHS Thermal Analysis Study", June 15, 2000.

TABLE 9.2-1

SERVICE WATER SYSTEM FLOW REQUIREMENTS
NORMAL POWER GENERATION OPERATION

Component	Flow Operating/ Standby(5) Each (gpm)	Total[7] Flow (gpm)	No./ In Use(5)	Duty Each (x 10^6 Btu/hr)	Total Duty (x 10^6 Btu/hr)
a. Closed cooling water heat exchangers	776/776	1,552	2/1	4.22	4.22
b. Central chiller condensing units	1,350/556	1,906	2/1	9.56	9.56
c. Central chiller pumpout units	~0.5/~0.5	~1	2/0	0	0
d. Steam packing exhauster	1,153/741	1,153	1/1	12.5	12.5
e. Deleted					
f. Generator hydrogen coolers	1,450	2,900	2/2	11.99	23.98
g. Generator stator liquid coolers	2,388/1,038	3,426	2/1	17.9	17.9
h. Turbine-generator lube oil coolers	1,608/1,608	3,216	2/1	10.8	10.8
i. CVCS chiller	300/153	300	1/1	2.3	2.3
j. Steam generator blowdown non-regenerative heat exchanger (max.)	1,526/1,526	1,526	1/1	18.5	18.5
k. Condenser vacuum pump seal water coolers (8)	630/630	1,890	3/2	.87	1.74
l. Water box venting pump seal water coolers (8)	Unit C: 55/55 Units A&B: 87/87	229	3/2	.17	.34
m. Motor-driven steam generator feedwater pump and coolers (2)	24	24	1/0	.48	0
n. Make Up Demineralized System Supply	N/A	700[9]	N/A	N/A	N/A

TABLE 9.2-1 (Sheet 2)

	Total Flow (gpm)	Total Duty (x 10^6 Btu/hr)
Service water system total	18,823	101.84(3)
Total essential service water system (normal operation)(1)	24,246	65.496
Total power block service water requirement (6)	43,069	167.336

(1) From Table 9.2-2
(2) Flow is continuous - duty applies during start-up only
(3) Does not include item m. or c.
(4) Deleted
(5) Units on standby will receive the standby flow to control microbiologically induced corrosion (MIC). MIC flow to the standby turbine generator lube oil coolers and central chiller condensers is optional, if chemical treatment or periodic inspections and cleaning is provided.
(6) Does not include 2000 gpm for site auxiliaries.
(7) These flow rates are nominal design flow rates. Actual operating flow rates may be lower because when the lake temperature is below the design temperature of 90°F, less flow is required to remove the heat load of the heat exchangers. Also, in some components the flow is throttled to control the temperature of the process fluid. Additionally, if the desired MIC flow is not maintained, periodic MIC inspection are performed.
(8) Number of running pumps will be as required to maintain system vacuum.
(9) Flow will vary from 0 to 700 gpm depending on Make Up Demineralizer System demand.

TABLE 9.2-2

ESSENTIAL SERVICE WATER SYSTEM FLOW REQUIREMENTS
NORMAL POWER GENERATION OPERATION

Equipment Description	Section Number	Number/ In Use	'A' Train Flow (gpm)/ Duty (x 10^6 Btu/hr)(2)	'B' Train Flow (gpm)/ Duty (x 10^6 Btu/hr)(2)	Total Duty (x 10^6 Btu/hr)
Component cooling water heat exchanger	9.2.2	2/1	8,800/48.42	7,350/0	48.42
Containment air cooler	6.2.2	4/4	1,850/6.76	1,850/6.76	13.52
Diesel generator cooler	9.5.5	2/0	1,200/0	1,200/0	0.0
Component cooling water pump room cooler	9.4.3	2/1	128/0.153	128/0	0.153
Centrifugal charging pump room cooler	9.4.3	2/1	128/0.162	128/0	0.162
Auxiliary feedwater pump room cooler	9.4.3	2/0	128/0	128/0	0.0
Safety injection pump room cooler	9.4.3	2/0	88/0	88/0	0.0
RHR pump room cooler	9.4.3	2/0	88/0	88/0	0.0

TABLE 9.2-2 (Sheet 2)

Equipment Description	Section Number	Number/ In Use	'A' Train Flow (gpm)/ Duty (x 10^6 Btu/hr)(2)	'B' Train Flow (gpm)/ Duty (x 10^6 Btu/hr)(2)	Total Duty (x 10^6 Btu/hr)
Containment spray pump room cooler	9.4.3	2/0	88/0	88/0	0.0
Penetration room cooler (electrical)	9.4.3	2/2	100/0.161	100/0.170	0.331
Fuel pool cooling pump room cooler	9.4.2	2/1	32/0.077	32/0	0.077
Control room a/c unit condenser	9.4.1	2/1	140/0.663	140/0	0.663
Class IE switchgear a/c condenser	9.4.1	2/2	66/0.485	66/0.485	0.97
Air compressor and after cooler (1)	9.3.1	2/2	40/0.60	40/0.60	1.20
Total "A" train	---	---	12,848/57.481	---	57.481
Total "B" train	---	---	---	11,398/8.015	8.015
Flow to auxiliary feedwater system	10.4.9	---	O/NA	O/NA	---
Makeup to fuel storage pool cooling & cleanup system	9.1.3	---	O/NA	O/NA	---
Makeup to component cooling water system	9.2.2	---	O/NA	O/NA	---
Total(3)	---	---	12,848/57.481	11,398/8.015	65.496

(1) Values may vary with plant conditions; both are assumed to be operating.
(2) These flow rates are nominal design flow rates. Actual operating flow rates may be lower because when the lake temperature is below the design temperature of 90°F, less flow is required to remove the heat load of the heat exchangers. Also, in some components the flow is throttled to control the temperature of the process fluid. Additionally, if the desired MIC flow is not maintained, periodic MIC inspection are performed.
(3) Pre-Lube Storage Tank flow is not included in this total.

TABLE 9.2-3

ESSENTIAL SERVICE WATER SYSTEM FLOW REQUIREMENTS
POST-LOCA OPERATION

Equipment Description	Section Number	Number/ In Use	'A' Train Flow (gpm)/ Duty (x 10^6 Btu/hr)(3)	'B' Train Flow (gpm)/ Duty (x 10^6 Btu/hr)(3)	Total Duty (x 10^6 Btu/hr)(2)
Component cooling water heat exchanger (1) and (9)	9.2.2	2/2	7,350/164.14	7,350/164.14	(2)
Containment air cooler (10)	6.2.2	4/4	2,000/141.4	2,000/141.4	(2)
Diesel generator cooler	9.5.5	2/2	1,200/16.8	1,200/16.8	33.6
Component cooling water pump room cooler (13)	9.4.3	2/2	128/0.280	128/0.280	0.560
Centrifugal charging pump room cooler (13)	9.4.3	2/2	128/0.171	128/0.171	0.342
Auxiliary feedwater pump room cooler (7) (13)	9.4.3	2/2	128/0.320	128/0.320	0.640
Safety injection pump room cooler (13)	9.4.3	2/2	88/0.165	88/0.165	0.330
RHR pump room cooler (13)	9.4.3	2/2	88/0.17	88/0.17	0.34
Containment spray pump room cooler (13)	9.4.3	2/2	88/0.174	88/0.174	0.348
Penetration room cooler (electrical) (13)	9.4.3	2/2	100/0.108	100/0.114	0.222

TABLE 9.2-3 (Sheet 2)

Equipment Description	Section Number	Number/ In Use	'A' Train Flow (gpm)/ Duty (x 10^6 Btu/hr)(3)	'B' Train Flow (gpm)/ Duty (x 10^6 Btu/hr)(3)	Total Duty (x 10^6 Btu/hr)(2)
Fuel pool cooling pump room cooler (13)	9.4.2	2/2	29/0.075	29/0.075	0.150
Control room a/c unit condenser (13)	9.4.1	2/2	85/0.663	85/0.663	1.326
Class IE switchgear a/c condenser (13)	9.4.1	2/2	73.3/0.485	73.3/0.485	0.970
Air compressor and after cooler (4)	9.3.1	2/2	40/0.60	40/0.60	1.20
Total for operating ESW train	-	-	11,548/(12)	11,548/(12)	(12)
Maximum flow to auxiliary feedwater system (5&6)	10.4.9	-	1,120/NA	1,120/NA	-
Makeup to fuel storage pool cooling & cleanup systems (6)	9.1.3	-	25/NA	25/NA	-
Maximum makeup to component cooling water system (6)	9.2.2	-	100/NA	100/NA	-
Total flow(11)	-	-	12,793	12,793	-

TABLE 9.2-3 (Sheet 2a)

NOTE: (1) Load does not occur until post-LOCA recirculation mode is initiated.

(2) The CCW heat exchanger and CAC duties given are limiting design values corresponding to a single train cooldown. These number are not additive since duties per train are significantly less for a two train cooldown. CCW heat exchanger and CAC peak duties for a two train LOCA cooldown are 240 MBTU/hr (120 MBTU/hr per train) and 272 MBTU/hr (136 MBTU/hr per train), respectively (see Figures 9.2-6C and 9.2-6B. RHR and CCW peak duties are essentially the same).

(3) Peak duty is shown for each component. Total duty is actually less and will reduce long term, as described in Section 9.2.5.

(4) Values may vary with plant conditions.

(5) Auxiliary feedwater system may be used to maintain steam generator water level post-LOCA.

(6) Flow shown would be maximum intermittent value expected.

(7) Heat load shown would be maximum intermittent value expected.

(8) Deleted.

(9) The essential service water flow to the CCW heat exchangers may be reduced to as low as 7150 gpm in order to ensure that the design bases cooling water flows are provided to the remaining ESW system components.

(10) At least 42.7 psig must be maintained at the CAC return ESW header (measured at the top of the cooler housing) to prevent boiling in the tubes.

(11) Pre-Lube Storage Tank, Traveling water screen wash and Strainer Backwash Flows are not included in this total.

(12) These duties are not additive since peak CCW and CAC duties do not occur at the same time. Peak analyzed ESW duty for two train LOCA cooldown is 494.6 MBTU/hr (see Figure 9.2-6A).

(13) For these units the flow and duty listed are nominal vendor design values and reflect a target value that is used when flow balancing the system. The minimum flow requirements for removing Post LOCA heat loads are less than the values listed and are documented in controlled Engineering Calculations.

TABLE 9.2-4

ESSENTIAL SERVICE WATER SYSTEM FLOW REQUIREMENTS
NORMAL SHUTDOWN OPERATION

Equipment Description	Section Number	Number/ In Use	'A' Train Flow (gpm)/ Duty (x 10^6 Btu/hr)	'B' Train Flow (gpm)/ Duty (x 10^6 Btu/hr)	Total Duty(2) (x 10^6 Btu/hr)
Component cooling water heat exchanger (1)	9.2.2	2/2	8,800/135.78	8,800/117.11	261.70
Containment air cooler	6.2.2	4/4	1,850/6.76(5)	1,850/6.76(5)	13.52(5)
Diesel generator cooler	9.5.5	2/0	1,200/0	1,200/0	0.0
Component cooling water pump room cooler(8)	9.4.3	2/2	128/0.263	128/0.280	0.543
Centrifugal charging pump room cooler (8)	9.4.3	2/1	128/0.162	128/0	0.162
Auxiliary feedwater pump room cooler (8)	9.4.3	2/0	128/0	128/0	0
Safety injection pump room cooler (8)	9.4.3	2/0	88/0	88/0	0.0
RHR pump room cooler (8)	9.4.3	2/2	88/0.17	88/0.17	0.34
Containment spray pump room cooler (8)	9.4.3	2/0	88/0	88/0	0.0
Penetration room cooler (8)	9.4.3	2/2	100/0.161	100/0.170	0.331

TABLE 9.2-4 (Sheet 2)

Equipment Description	Section Number	Number In Use	'A' Train Flow (gpm)/ Duty (x 10^6 Btu/hr)	'B' Train Flow (gpm)/ Duty (x 10^6 Btu/hr)	Total Duty(2) (x 10^6 Btu/hr)
Fuel pool cooling pump room cooler (8)	9.4.2	2/2	32/0.056	32/0.056	0.112
Control room a/c unit condenser (8)	9.4.1	2/1	140/0.663	140/0	0.663
Class IE switch-gear a/c condenser (8)	9.4.1	2/2	66/0.485	66/0.485	0.97
Air compressor and after cooler (3)	9.3.1	2/2	40/0.600	40/0.600	1.20
Total	-	-	12,848/153.91	12,848/125.631	279.541
Flow to auxiliary feed-water system	10.4.9	-	-	0	-
Makeup to spent fuel pool cooling & cleanup system	9.1.3	-	-	0	-
Makeup to component cooling water system	9.2.2	-	-	0	-
Total flow(6)			12,848	12,848	

TABLE 9.2-4 (Sheet 2a)

NOTE: (1) Maximum duty from CCW occurs 4 hours after initiation of shutdown when the RHR system is brought into service, as described in Section 9.2.2.

(2) Peak duty is shown for each component. Total duty to UHS is actually less and will reduce long term.

(3) Values may vary with plant conditions; both are assumed to be operating.

(4) Estimated temperatures based on a maximum service water supply temperature of 90°F. These temperatures apply 4 hours after shutdown.

(5) The heat load per train for Normal Shutdown with loss of off-site power is 3.96×10^6 Btu/hr. The total heat load is 7.92×10^6 Btu/hr.

(6) Pre-Lube Storage Tank flow is not included in this total.

(7) Deleted.

(8) For these units the flow and duty listed are nominal vendor design values and reflect a target value that is used when flow balancing the system. The minimum flow requirements for removing Normal Shutdown heat loads are less than the values listed and are documented in controlled Engineering Calculations.

TABLE 9.2-5

ESSENTIAL SERVICE WATER SYSTEM COMPONENT DATA

Essential Service Water Pump (all data is per pump)

Quantity	2 (100% each)
Type	Vert centrifugal - 2 stg. with packed stuffing boxes
Capacity, gpm	15,000
TDH, ft	361
Submergence required, ft	9
Material	
Case	Carbon steel
Impeller	Aluminum - Bronze
Shaft	Stainless Steel
Design Codes	ASME Section III, C1. 3
Driver	
Type	Electric motor
Horsepower	1,750
RPM	885
Power Supply	4,000 V 60 Hz, 3-phase, Class 1E
Design code	NEMA
Seismic design	Category I

Essential Service Water Pump Prelube Storage Tanks (all data is per tank)

Quantity	2
Type	Vertical
Capacity, gallons	43
Design pressure	Atm.
Design temperature, F	122
Shell material	Stainless steel
Corrosion Allowance	1/16 inch
Design code	ASME Section III, C1. 3
Seismic design	Category I

Essential Service Water Self Cleaning Strainers (all data is per strainer)

Quantity per unit	2
Capacity, gpm	15,000
Pressure drop, clean	3.5 psi (typical)
Pressure drop, dirty*	5.56 psi
Strainer openings	1/16 inch
Design pressure psig	200
Design temperature, F	100

*At start of backwash

TABLE 9.2-5 (Sheet 2)

Design Code	ASME Section III, C1. 3
Driver	
Type	Electric Motor
Horsepower	1
Rpm	1750
Power Supply	Class 1E
Design Code	NEMA
Seismic design	Category I

Essential Service Water Traveling Water Screens
(all data is per screen)

Quantity	2
Capacity, gpm	15,000
Size, height x width	43'-0" x 8'-0"
Screen openings	3/8"
Screen material	304 SS
Pressure drop, clean	0.05 inches of water
Pressure drop, dirty (20% clean)	0.691 inches of water
Water velocity @ design capacity	0.74 ft/sec
Design code	AGMA*
Seismic design	Category I
Driver	
Type	Electric motor
Horsepower	3.0/0.75
Rpm	1,740/430
Power Supply	Class 1E
Design Code	NEMA
Seismic design	Category I

Piping, Fittings, and Valves

Design pressure, psig	200
Design temperature, F	200
Material	Carbon steel, Stainless Steel
Design Code	ASME Section III, C1. 3

*AGMA - American Gear Manufacturers Association

TABLE 9.2-6

ESSENTIAL SERVICE WATER SYSTEM
SINGLE ACTIVE FAILURE ANALYSIS

	Component	Failure	Comments
1.	ESW pump and associated supporting items	Fails to start on automatic signal.	Two pumps are provided. One is sufficient for post-LOCA heat removal.
2.	Supply isolation valve between SW and ESW system	Fails to close on automatic signal.	Second valve in series provides isolation.
3.	Supply valve to air compressor	Fails to close upon small break.	Continued use of the system results in minimal loss of water. 100 percent of the heat load is removed by the redundant train.
4.	CCW heat exchanger inlet valve	Fails to open on automatic signal.	Two CCS heat exchangers and two paths are provided. One loop provides 100% cooling capacity.
5.	CCW heat exchanger main outlet valve	Fails to close on automatic signal. Note bypass valve provides desired flow.	Results in lower flows to other components (i.e. containment air cooler), hence reducing their efficiency. 100 percent of the heat load is removed by the redundant train.
6.	Return isolation valve between SW and ESW system	Fails to close on automatic signal.	Second valve in series provides isolation.
7.	Return isolation valve to ultimate heat sink.	Fails to open on automatic signal.	100 percent of the heat load is removed by the redundant train.

TABLE 9.2-7

ESSENTIAL SERVICE WATER SYSTEM,
INDICATING AND ALARM DEVICES

Indication	Control Room	Local	Control Room Alarm
ESW header flow rate	Yes	No	No
ESW header temperature	Yes	No	No
High pressure drop to air compressor and after cooler	Yes	No	No
Power-operated valve position (all valves)	Yes	Yes	No

TABLE 9.2-8

ESSENTIAL SERVICE WATER SYSTEM
INDICATING AND ALARM DEVICES

Indication	Control Room	Local
Essential service water pump discharge pressure	Yes	Yes
Essential service water pump discharge strainer high pressure differential	No	Yes
Essential service water pump intake water level	No	Yes
Alarms		
Essential service water pump low discharge pressure	Yes	No
Essential service water pump discharge strainer high pressure differential	Yes	No

TABLE 9.2-9

COMPONENT COOLING WATER SYSTEM REQUIREMENTS
NORMAL OPERATION

Equipment Description	Section Number	Number/ In Use	'A' Train Flow (gpm)/ Duty (x 10^6 Btu/hr)	'B' Train Flow (gpm)/ Duty (x 10^6 Btu/hr)	Total Duty (x 10^6 Btu/hr)
Essential Components					
Residual heat removal heat exchangers	5.4.7 & 6.3	2/0	0/0	0/0	0.0
RHR pump seal coolers	5.4.7 & 6.3	2/1	4/0	0/0	0.0
Centrifugal charging pump bearing oil coolers	9.3.4	2/1	55/0.0755	0/0	0.0755
Safety injection pump bearing oil coolers	6.3	2/1	25/0	0/0	0.0
Fuel pool cooling heat exchangers	9.1.3	2/1	3,000/15.46	0/0	15.46
Excess letdown heat exchanger	9.3.4	1/1	183[9]/0	NA	0.0
Reactor coolant pumps(4) Motor air coolers Upper bearing coolers Lower bearing coolers Thermal barrier cooling coils	5.0	4/4	2,064/8.38	NA	8.38
Nonessential Components (1)(4)					
Reactor coolant drain Tank heat exchanger	11.2	1/1	225/2.23	NA	2.23
Letdown heat exchanger	9.3.4	1/1	700/10.5[10]	NA	10.50[2]
Seal water heat exchanger	9.3.4	1/1	375/1.88	NA	1.88

TABLE 9.2-9 (Sheet 2)

Equipment Description	Section Number	Number/ In Use	'A' Train Flow (gpm)/ Duty (x 10^6 Btu/hr)	'B' Train Flow (gpm)/ Duty (x 10^6 Btu/hr)	Total Duty (x 10^6 Btu/hr)
Recycle evaporator Package (11) (12) (13)	9.3.6	1/0	0/0 (12)	NA	0 (12)
Aux. steam radiation monitor RE-50		1/1	46/0.23	NA	0.23
Deleted (5)					
Waste gas compressor (2)	11.3	2/1	100/0.135	NA	0.135
Catalytic hydrogen recombiner (2)	11.3	2/1	20/0.075	NA	0.075
Nuclear sample system sample cooler	9.3.2	1/1	82.4/0.63 (6)	NA	0.63
Waste evaporator package (12) (13)	11.2	1/0	0/0 (12)	NA	0 (12)
Secondary waste evaporator package (12) (13)	10.4.10	1/0	0/0 (12)	NA	0 (12)
Reverse osmosis unit (3)	11.2	0/0	0/0(3)	NA	0.0(3)
Total			(14) 6880/39.61	0/0	39.61

Notes:
(1) Nonessential components feed from either train.
(2) Each of the two components is supplied with cooling water at a rate of one-half of the flow rate shown; however, only one of the components is accepting a heat load.
(3) Reverse Osmosis Unit has been removed, however there is a flow loop via throttling EGV0423. EGTV0423 is locked shut.
(4) The flows and related duty for these components are nominal values used for calculational purposes. Actual flows and duties may vary with actual plant operating conditions.
(5) PASS is no longer used due to Amendment 137.
(6) Flow as low as 60 gpm is acceptable for use.
(7) Deleted.
(8) Deleted.
(9) 170 gpm for -15°F T_{hot} Reduction
(10) 9.9 x 10^6 Btu/Hr for -15°F T_{hot} Reduction
(11) Deleted.
(12) Flow to these components is permanently isolated.
(13) Equipment is abandoned in place.
(14) DCP 13540 installed a bypass line which maintains the total nominal CCWS flow rate during normal operation at approximately 9790 gpm.

WOLF CREEK

TABLE 9.2-10

COMPONENT COOLING WATER SYSTEM REQUIREMENTS
SHUTDOWN (@ 4 HOURS) OPERATIONS

Equipment Description	Section Number	Number/ In Use	'A' Train Flow (gpm)/ Duty (x 10^6 Btu/hr)(1)(2)	'B' Train Flow (gpm)/ Duty (x 10^6 Btu/hr)(2)	Total Duty (x 10^6 Btu/hr)
Essential Components					
Residual heat removal heat exchanger	5.4.7 & 6.3	2/2	7,600/117.0	7,600/117.0	234.0
RHR pump seal cooler	5.4.7 & 6.3	2/2	4/0.03	4/0.03	0.06
Centrifugal charging pump bearing oil cooler	9.3.4	2/2	55/0.0755	55/0.0755	0.151
Safety injection pump bearing oil cooler	6.3	2/2	25/0	25/0	0.0
Fuel pool cooling heat exchanger (3)	9.1.3	2/0	0/0	0/0	0.0
Excess letdown heat exchanger	9.3.4	1/1	183[13]/0	NA	0.0
Reactor coolant pumps(9) Motor air coolers Upper bearing coolers Lower bearing coolers Thermal barrier cooling coils	5.0	4/1	2,064/2.1	NA	2.1
Nonessential Components(9)					
Reactor coolant drain Tank heat exchanger	11.2	1/0	225/0	NA	0.0
Letdown heat exchanger	9.3.4	1/1	1,000/4.8	NA	4.8
Seal water heat exchanger	9.3.4	1/1	375/1.88	NA	1.88

TABLE 9.2-10 (Sheet 2)

Equipment Description	Section Number	Number/ In Use	'A' Train Flow (gpm)/ Duty (x 10^6 Btu/hr)(1)(2)	'B' Train Flow (gpm)/ Duty (x 10^6 Btu/hr)(2)	Total Duty (x 10^6 Btu/hr)
Recycle evaporator Package (15) (16)	9.3.6	1/0	0/0	NA	0
Waste gas compressor (5)	11.3	2/1	100/0.135	NA	0.135
Aux. steam radiation monitor RE-50		1/1	46/0.23	NA	0.23
Deleted (7)					
Catalytic hydrogen recombiner (5)	11.3	2/1	20/0.075	NA	0.075
Nuclear sample system sample cooler	9.3.2	1/1	82.4/0.63 (8)	NA	0.63
Waste evaporator package (15) (16)	11.2	1/0	0/0	NA	0
Secondary waste evaporator Package (15) (16)	10.4.10	1/0	0/0	NA	0.0
Reverse osmosis unit (6)	11.2	1/0	0/0.0 (6)	NA	0.0 (6)
Total			11,780/126.97	7,684/117.11	244.08

NOTE: (1) Two CCW pumps are operating in Train A, for cooling nonessential loads. Nonessential loads can be fed from either train.
(2) Peak duty is shown. Heat load is lower as shutdown progresses.
(3) Peak duty from fuel storage pool cooling system is 13.3 x 10^6 Btu/hr during refueling. This load can be shed for up to 4 hours after initiation of RHR load. As the RHR heat load is reduced, or selected nonessential loads are dropped, the fuel pool cooling may be placed back into service as indicated in Section 9.2.5.
(4) During emergency shutdowns, prior to placing the RHR system into service at 4 hours after shutdown, the seal water heat exchanger is required to cool a maximum of 120 gpm (Btu/hr) of water recirculated from the discharge of the charging pumps; and the excess letdown heat exchanger is required to cool a maximum of 60 gpm (Btu/hr) letdown flow to the PRT.
(5) Each of the two components is supplied with cooling water at a rate of one-half of the flow rate shown; however, only one of the components is accepting a heat load.
(6) Reverse Osmosis Unit has been removed, however there is a flow loop via throttling EGV0423. EGV0423 is locked shut.
(7) PASS is no longer used due to Amendment 137.
(8) Flow as low as 60 gpm is acceptable for use.
(9) The flows and related duty for these components are nominal values used for calculational purposes. Actual flows and duty may vary with actual plant operating conditions.
(10) Deleted.
(11) Deleted.
(12) Deleted.
(13) 170 gpm for -15°F T_{hot} Reduction
(14) Deleted.
(15) Flow to these components is permanently isolated.
(16) Equipment is abandoned in place.

TABLE 9.2-11

COMPONENT COOLING WATER SYSTEM REQUIREMENTS POST LOCA

Equipment Description	Section Number	Number/ In Use	'A' Train Flow (gpm)/ Duty (x 10^6 Btu/hr)(1)	'B' Train Flow (gpm)/ Duty (x 10^6 Btu/hr)(1)	Total Duty (x 10^6 Btu/hr)
Essential Components					
Residual heat removal heat exchanger	5.4.7 & 6.3	2/2	7,600/164	7,600/164	(5)
RHR pump seal cooler	5.4.7 & 6.3	2/2	4/0.03	4/0.03	0.06
Centrifugal charging pump bearing oil cooler	9.3.4	2/2	55/0.08	55/0.08	0.16
Safety injection pump bearing oil cooler	6.3	2/2	25/0.024	25/0.024	0.05
Fuel pool cooling heat exchanger (2)	9.1.3	2/1	0/0	0/0	0.0
Excess letdown heat exchanger	9.3.4	1/0	0/0	NA	0.0
Reactor coolant pumps Motor air coolers Upper bearing coolers Lower bearing coolers Thermal barrier cooling coils	5.0	4/0	0/0	NA	0.0
Nonessential Components					
Reactor coolant drain Tank heat exchanger	11.2	1/0	0/0	NA	0.0
Letdown heat exchanger	9.3.4	1/0	0/0	NA	0.0
Seal water heat exchanger	9.3.4	1/0	0/0	NA	0.0

TABLE 9.2-11 (Sheet 2)

Equipment Description	Section Number	Number/ In Use	'A' Train Flow (gpm)/ Duty (x 10^6 Btu/hr)(1)	'B' Train Flow (gpm)/ Duty (x 10^6 Btu/hr)(1)	Total Duty (x 10^6 Btu/hr)
Recycle evaporator package(6, 7)	9.3.6	1/0	0/0	NA	0.0
Waste gas compressor	11.3	2/0	0/0	NA	0.0
Aux. steam radiation monitor RE-50		1/0	0/0	NA	0.0
Deleted (3)					
Catalytic hydrogen recombiner	11.3	2/0	0/0	NA	0.0
Nuclear sample system sample cooler	9.3.2	1/0	0/0	NA	0.0
Waste evaporator package (6, 7)	11.2	1/0	0/0	NA	0.0
Secondary waste evaporator Package (6, 7)	10.4.10	1/0	0/0	NA	0.0
Reverse osmosis unit (8)	11.2	1/0	0/0	NA	0.0
Total			7,684.9/164.14	7,684.0/164.13	(5)

NOTE: (1) Peak duty is shown representing start of recirculation mode. Total duty is reduced long term.

(2) Flow rate and heat load for fuel pool cooling heat exchangers are not included in totals, since they are not added until 4 hours after start of the recirculation mode when heat from other sources has been significantly reduced, as shown in Section 9.2.5.
(3) PASS is no longer used due to Amendment 137.
(4) Deleted.
(5) The RHR heat exchanger duties given are limiting design values corresponding to a single train cooldown. Total RHR heat exchanger peak duty for a two train LOCA cooldown is 240 MBTU/hr (120 MBTU/hr per train, see Figure 9.2-6C). Since the other CCW loads are relatively small, CCW system peak duties are essentially the same as for the RHR heat exchangers themselves.
(6) Equipment is Abandoned in Place.
(7) Flow to these components is permanently isolated.
(8) Reverse Osmosis Unit has been removed, however there is a flow loop via trottling EGV0423. EGV0423 is locked shut.

TABLE 9.2-12

COMPONENT COOLING WATER SYSTEM COMPONENT DATA

Component Cooling Water Pump (all data is per pump)

Quantity	4 (100% each)
Type	Horizontal centrifugal, split case dual volute with mechanical seals
Capacity, gpm (each)	11,025
TDH, ft	195
NPSH required, ft	20
NPSH available, ft (min.)	40
Material	
Case	Carbon steel
Impeller	Bronze
Shaft	Alloy steel
Design codes	ASME Section III, Class 3
Driver	
Type	Electric motor
Horsepower, hp	700 with a 1.0 service factor
RPM	1,180
Power supply	4,160 V, 60 Hz, 3-phase, Class IE
Design code	NEMA
Seismic design	Category I

Component Cooling Water Heat Exchangers (all data is per exchanger)

Quantity	2 (100% each)
Type	Horizontal shell and straight tube
Design duty normal operation (each), Btu/hr	77.18×10^6
U-Factor, Btu/hr-ft^2, F	
Clean	580
Dirty	221
Area, ft^2	31,900
Tube Side:	
Fluid	Service water/essential service water
Number of passes	2
Temperature, in/out F	95/106.4
Flow rate, gpm	13,500
Design pressure, psig	200
Design temperature, F	200
Material	
Tubes	Copper-nickel
Tube sheet	Carbon steel
Codes and standards	ASME Section III, Class 3, TEMA R
Seismic design	Category I

TABLE 9.2-12 (Sheet 2)

Shell Side:

Fluid	CCW
Number of passes	2
Temperature, in/out F	119.7/105
Flow rate, gpm	10,500
Design pressure, psig	150
Design temperature, F	200
Material	Carbon steel
Codes and standards	ASME Section III, Class 3, TEMA R
Seismic design	Category I

Component Cooling Water Surge Tank

Quantity	2
Type	Vertical
Capacity (each), gallon	5,000
Operating pressure/temperature, psig/F	Atm/120
Design pressure/temperature, psig/F	150/200
Material	Carbon steel
Code	ASME Section III, Class 3
Seismic design	Category I

Component Cooling Water Chemical Addition Tank

Quantity	1
Type	Vertical
Capacity, gallons	500
Operating pressure/temperature, psig/F	90/ambient
Design pressure/temperature, psig/F	150/200
Material	Carbon steel
Code	ASME Section VIII

Piping, Fitting, and Valves

Design pressure, psig	150
Design temperature	200
Material	Carbon steel
Design code	
Containment penetrations	ASME Section III, Class 2
Safety-related portion	ASME Section III, Class 3
Nonsafety-related portion	ANSI B31.1

TABLE 9.2-13

COMPONENT COOLING WATER SYSTEM
SINGLE ACTIVE FAILURE ANALYSIS

Component	Failure	Comments
1. CCW pump	Fails to start on automatic signal.	Four pumps are provided. One pump is sufficient for post-LOCA heat removal.
2. CCW heat exchanger bypass valve	Control loop drives valve full open.	Two separated cooling loops are provided. One loop provides 100% cooling capacity
3. Motor-operated isolation valve on residual heat exchanger inlet	Fails to open on automatic signal post LOCA.	Two residual heat exchangers and two flow paths are provided. Flow is required to only one RHR heat exchanger post LOCA.
4. CCW flow path, including heat exchanger shell	Failure of pressure boundary resulting in abnormal leakage and loss of system fluid.	Two separate cooling loops are provided. One loop provides 100% cooling capacity.
5. Power supply	Failure of both normal and preferred power supplies.	All Class IE components automatically switch to operation from power supplied from emergency diesel generators.
6. Power supply	Failure of power supply bus to one train.	The other train is supplied from an independent and physically separated bus. Each train provides 100% cooling capacity.
7. Essential service makeup water supply valves	Failure to open valve if makeup is required.	Two separate cooling loops are provided. Makeup to either loop is sufficient.
8. Motor-operated isolation valves for supply to non-essential components	One valve fails to close on SIS or low surge tank level.	Two valves are provided in series. One valve closing provides isolation.
9. Motor-operated isolation valves for return from non-essential components	One valve fails to close on SIS or low surge tank level.	Two valves are provided in series. One valve closing provides isolation.
10. Motor-operated isolation valves for supply to essential components inside containment	One valve fails to close on CIS-B. Either valve closes upon receipt of spurious signal.	Two valves are provided in series. One valve closing provides isolation. Valves are provided in parallel. Opening valve within 10 minutes is sufficient for RCP motor bearing heat removal. CVCS seal injection provides diverse cooling for RCP seals.
11. Containment isolation valves for supply to essential components inside containment	One valve fails to close.	Two valves (one check and one motor operated closed by CIS-B) are provided in series. One valve closing provides isolation.
12. Motor-operated valve on outlet of fuel storage pool cooling heat exchanger.	Fails to close on automatic signal post LOCA	Two RHR heat exchangers and two flow paths provided. Flow is required to only one RHR heat exchanger post LOCA.

TABLE 9.2-13 (Sheet 2)

Component	Failure	Comments
13. Containment isolation valves for return line for reactor coolant pump thermal barrier	One valve fails to close on CIS-B. Either valve closes upon receipt of spurious signal.	Two valves are provided in series. One valve closing provides isolation. CVCS seal injection provides diverse cooling for RCP seals. Long-term requirements are met by opening parallel valves.
14. Containment isolation valves for return line for other essential components inside containment	One valve fails to close on CIS-B. Either valve closes upon receipt of spurious signal.	Two valves are provided in series. One valve closing provides isolation. Valves are provided in parallel. Opening valve within 10 minutes sufficient for RCP motor bearing heat removal.
15. CCW to Radwaste Return Check Valves (EGV0448 And EGV0449)	One valve fails to close following a break in the non safety related radwaste service loop portion of CCW piping.	Two valves are provided in series. One valve closing provides isolation.

TABLE 9.2-14

COMPONENT COOLING WATER SYSTEM,
INDICATING AND ALARM DEVICES

Indication	Control Room	Local	Control Room Alarm
CCW heat exchanger flow	Yes	Yes	No
CCW heat exchanger inlet temperature	Yes	Yes	No
CCW heat exchanger outlet temperature	Yes	Yes	Yes
CCW pump suction pressure	No	Yes	No
CCW pump discharge pressure	Yes	Yes	Yes
CCW motor running lights	Yes	No	No
CCW heat exchanger inlet pressure	No	Yes	No
CCW heat exchanger outlet pressure	No	Yes	No
CCW flow to redundant safety-related equipment trains	Yes	Yes	Yes
CCW flow to incontainment service	Yes	Yes	Yes
CCW temperature out of safety-related equipment	No	Yes	No
CCW surge tank level	Yes	Yes	Yes
Radiation level of fluid	Yes	No	Yes
CCW flow to RCPs	No	Yes	Yes

TABLE 9.2-15

MAJOR COMPONENTS SUPPLIED WITH WATER FROM DEMINERALIZED WATER STORAGE AND TRANSFER SYSTEM

A. Condensate storage tank

B. Reactor makeup water storage tank

C. Component cooling water system

D. Closed cooling water system

E. Auxiliary steam system

F. D-G cooling water expansion tank

G. Chilled water system

H. Hot water system

I. Miscellaneous laboratory and sampling requirements

J. Miscellaneous flushing requirements

K. Miscellaneous makeup requirements

L. Condensate pump seals

M. Condensate and chemical addition

TABLE 9.2-16
PLANT WATER CHEMISTRY SPECIFICATIONS(1)
(typical)

Item/Service	Demineralized Water	Condensate Storage Tk	Reactor Makeup Water Tank	Refueling Water Storage Tank(3)	Fuel Pool(3)
pH @ 25C	6.0 - 8.0	6.0 - 8.0	6.0 - 8.0	4.0 - 4.7	4.0 - 8.0
Cation conductivity @25C (mho)/cm	<1.0	<1.0	<1.0	-	-(6)
Specific conductivity @ 25C (mho)/cm	-	-	<2.0	-	-
Sodium (ppm)	<0.01	<0.01	-	-	-
Silica (ppm)	<0.1	<0.2	<0.1	<0.3	-
Chlorides (ppm)	(4)	-	(4)	<0.15	≤0.15
Fluorides (ppm)	(4)	-	(4)	<0.15	≤0.15
Boric acid (ppm B)	-	-	<1.0	2000 ± 50	≥2000
Potassium (ppm)	<0.01	-	<0.01	-	-
Aluminum (ppm)	<0.02	-	<0.02	<0.08	-
Calcium (ppm)	<0.02	-	<0.02	<0.08	≤1.0
Magnesium (ppm)	<0.02	-	<0.02	<0.08	≤1.0
Dissolved oxygen (ppm)	-	<0.1	<0.10	-	-
Suspended solids (ppm)(5)	<0.1	<0.1	<0.1	<2.0	-
Total solids (ppm)	<0.5	-	<0.5(2)	-	

NOTES:

(1) Actual plant water chemistry specifications can be found in the WCGS Chemistry Specification Manual.
(2) Excluding boric acid.
(3) Makeup water must meet the specification for reactor makeup water, except for dissolved oxygen.
(4) Total chlorides and fluorides must be ≤0.10.
(5) Solids concentration determined by filtration through filter having an 0.45 micron pore size.
(6) No specification requirement for items marked by a dash (-).

TABLE 9.2-17

ESW/UHS COOLING WATER CHEMISTRY ANALYSIS

Cations, PPM CaCO3	
Calcium, Ca	948
Magnesium,Mg	385
Sodium, Na	220
Potassium, K	12
Total cations	1,565
Anions, PPM $CaCO_3$	
Bicarbonate, HCO_3	66
Sulfate, SO_4	1,322
Chloride, CI	170
Nitrate, NO_3	7
Phosphate, PO	(Negl.)
Total anions	1,565
TDS, PPM	1,700
pH	7.4
Silica, SiO_2 PPM	1.5
Fe + Mn, PPM	1.4
Ammonia nitrogen, PPM	(Negl.)
Suspended solids, PPM	15-50
Makeup source	Redmond Res'v'r.
Concentration cycles	3 Drought

TABLE 9.2-18

DELETED

WOLF CREEK

TABLE 9.2-19
HEAT LOADS
FROM STATION AUXILIARIES POST LOCA

Component	Section Number	Actual Duty (Per Operating Train) (x 10^6 Btu/hr)	Analyzed Duty (Per Operating Train) (x 10^6 Btu/hr)
RHR pump seal cooler	5.4.7 & 6.3	0.03	0.07
Centrifugal charging pump bearing oil cooler	9.3.4	0.08	0.10
Safety injection pump bearing oil cooler	6.3	0.024	0.10
Diesel generator cooler	9.5.5	16.8	18.39
Component cooling water pump room cooler	9.4.3	0.280	0.32
Centrifugal charging pump room cooler	9.4.3	0.171	0.32
Auxiliary feedwater pump room cooler	9.4.3	0.28	0.32
Safety injection pump room cooler	9.4.3	0.165	0.22
RHR pump room cooler	9.4.3	0.17	0.22
Containment spray pump room cooler	9.4.3	0.174	0.22
Penetration room cooler (Electrical)	9.4.3	0.12	0.10
Fuel pool cooling pump room cooler	9.4.2	0.075	0.07
Control room ac unit condenser	9.4.1	0.66	0.66
Class IE switchgear ac condenser	9.4.1	0.49	0.49
Air compressor and after cooler	9.3.1	0.60	0.30
Total		20.119	21.90

Rev. 20

TABLE 9.2-20

HEAT LOADS
FROM STATION AUXILIARIES
NORMAL SHUTDOWN

Component	Section Number	Actual Duty (Per Operating Train) (x 10^6 Btu/hr)	Analyzed Duty (x 10 Btu/hr)
Reactor coolant pumps Motor air coolers Upper bearing coolers Lower bearing coolers Thermal barrier cooling coils	5.0	2.1	2.375
RHR pump seal cooler	5.4.7, 6.3	0.03	0.03
Centrifugal charging pump bearing oil cooler	9.3.4	0.0755	0.0755
Letdown heat exchanger	9.3.4	4.80	4.80
Seal water heat exchanger	9.3.4	1.88	1.88
Nuclear sample system sample cooler	9.3.2	0.63	0.63
Diesel generator cooler	9.5.5	16.8	16.8
Component cooling water pump room cooler	9.4.3	0.28	0.32
Centrifugal charging pump room cooler	9.4.3	0.162	0.32
Auxiliary feedwater pump room cooler	9.4.3	0.25	0.32
RHR pump room cooler	9.4.3	0.17	0.22
Penetration room cooler	9.4.3	0.170	0.170
Fuel pool cooling pump room cooler	9.4.2	0.06	0.07
Control room ac unit condenser	9.4.1	0.66	0.66
Class IE switchgear ac condenser	9.4.1	0.49	0.49
Air compressor and after-cooler	9.3.1	0.60	0.60
Total		29.16	29.76

TABLE 9.2-21 (Sheet 1 of 7)

DESIGN COMPARISON TO REGULATORY POSITIONS OF REGULATORY GUIDE 1.27, REVISION 2 DATED JANUARY 1976, TITLED "ULTIMATE HEAT SINK FOR NUCLEAR POWER PLANTS"

Regulatory Guide 1.27 Position	WCGS Position
I. 1. The ultimate heat sink should be capable of providing sufficient cooling for at least 30 days (a) to permit simultaneous safe shutdown and cooldown of all nuclear reactor units that it serves and to maintain them in a safe shutdown condition, and (b) in the event of an accident in one unit, to limit the effects of that accident safely, to permit simultaneous and safe shutdown of the remaining units, and to maintain them in a safe shutdown condition. Procedures for ensuring a continued capability after 30 days should be available. Sufficient conservatism should be provided to ensure that a 30-day cooling supply is available and that design basis temperatures of safety-related equipment are not exceeded. For heat sinks where the supply may be limited and/or the temperature of plant intake water from the sink may eventually become critical (e.g., ponds, lakes, cooling towers, or other sinks where recirculation between plant cooling water discharge and intake can occur), transient analyses of supply and/or temperature should be performed.	I. 1. Complies Refer to Section 9.2.5.1
2. The meteorological conditions result in maximum evaporation and drift loss should	2. Complies Refer to Section 9.2.5.3

TABLE 9.2-21 (Sheet 2 of 7)

Regulatory Guide 1.27 Position	WCGS Position
be the worst 30-day average combination of controlling parameters (e.g., dewpoint depression, windspeed, solar radiation. The meteorological conditions resulting in minimum water cooling should be the worst combination of controlling parameters, including diurnal variations where appropriate, for the critical time period(s) unique to the specific design of the sink. The following are acceptable methods for selecting these conditions: a. Based on regional climatological information, select the most severe observation for the critical time period(s) for each controlling parameter or parameter combination, with substantiation conservatism of these values for site use. The individual conditions may be combined without regard to historical occurrence. b. Select the most severe combination of controlling parameters, including diurnal variations where appropriate, for the total of the critical time period(s), based on examination of regional climatological measurements that are demonstrated to be representative of the site. If significantly less than 30 years of	

TABLE 9.2-21 (Sheet 3 of 7)

Regulatory Guide 1.27 Position	WCGS Position
representative data are available, other historical regional data should be examined to determine controlling meteorological conditions for the critical time period(s). If the examination of other historical regional data indicates that the controlling meteorological conditions did not occur within the period of record for the available representative data, then these conditions should be correlated with the available representative data and appropriate adjustments should be made for site conditions.	
c. Less severe meteorological conditions may be assumed when it can be demonstrated that the consequences of exceeding lesser design basis conditions for short time periods are acceptable. Information on magnitude, persistence, and frequency of occurrence of controlling meteorological parameters that exceed the design basis conditions, based on acceptable data as discussed above, should be presented.	
The above analysis related to the 30-day cooling supply and the excess temperature should include sufficient information to substantiate the assumptions and	

TABLE 9.2-21 (Sheet 4 of 7)

Regulatory Guide 1.27 Position	WCGS Position
analytical methods used. This information should include actual performance data for a similar cooling method operating under load near the specified design conditions or justification that conservative evaporation and drift loss and heat transfer values have been used.	
3. A cooling capacity of less than 30 days may be acceptable if it can be demonstrated that replenishment or use of an alternate water supply can be effected to assure the continuous capability of the sink to perform its safety functions, taking into account the availability of replenishment equipment and limitations that may be imposed on "freedom of movement" following an accident or the occurrence of severe natural phenomena.	3. Not applicable
II. 1. The ultimate heat sink complex, whether composed of single or multiple water sources, should be capable of withstanding, without loss of the sink safety functions specified in Regulatory Position I, following events:	II. 1. Complies
a. The most severe natural phenomena expected at the site, with appropriate ambient conditions, but with no two or more such phenomena occurring simultaneously,	

TABLE 9.2-21 (Sheet 5 of 7)

Regulatory Guide 1.27 Position	WCGS Position
b. The site-related events (e.g., transportation accident, river diversion) that historically have occurred or that may occur during the plant lifetime,	
c. Reasonably probable combinations of less severe natural phenomena and/or site-related events,	
d. A single failure of manmade structural features,	
2. Ultimate heat sink features, which are constructed specifically for the nuclear power plant and which are not required to be designed to withstand the Safe Shutdown Earthquake or the Probable Maximum Flood, should at least be designed and constructed to withstand the effects of the Operating Basis Earthquake (as defined in 10 CFR Part 100, Appendix A) and waterflow based on severe historical events in the region.	2. Not applicable
III. 1. The Ultimate Heat Sink (UHS) should consist of at least two sources of water, including their retaining structures, each with the capability to perform the safety functions specified in Regulatory Position I, unless it can be demonstrated that there is an extremely low probability of losing the capability of a single source.	III. 1. The Ultimate Heat Sink (UHS) is a single water source for the unit. The UHS is seismic Category I and its upper surface is located 17 feet below the normal pool elevation of the WCGS Cooling Lake. Hence, there is an extremely low probability of losing its capability. It is considered single failure proof.

TABLE 9.2-21 (Sheet 6 of 7)

Regulatory Guide 1.27 Position	WCGS Position
2. For close-loop cooling systems there should be at least two aqueducts connecting the source(s) with the intake structures of the nuclear power units and at least two aqueducts to return the cooling water to the source, unless it can be demonstrated that there is extremely low probability that a single aqueduct can functionally fail entirely as a result of natural or site-related phenomena.	2. Complies
3. For once-through cooling systems, there should be at least two aqueducts connecting the source(s) with the intake structures of the nuclear power units and at least two aqueducts to discharge the cooling water well away from the nuclear power plant to ensure that there is no potential for plant flooding by the discharged cooling water, unless it can be demonstrated that there is extremely low probability that a single aqueduct can functionally fail as a result of natural or site-related phenomena.	3. Not applicable
4. All water sources and their associated aqueducts should be highly reliable and should be separated and protected such that failure of any one will not induce failure of any other.	4. Complies

TABLE 9.2-21 (Sheet 7 of 7)

	Regulatory Guide 1.27 Position	WCGS Position
IV.	The technical specifications for the plant should include provisions for actions to be taken in the event that capability of the Ultimate Heat Sink or the plant temporarily does not satisfy Regulatory Positions I and III during operation.	No plant Technical Specifications are required because: (1) no conditions threaten partial loss of UHS capability and (2) the plant satisfies Regulatory Positions I and III during operation.

TABLE 9.2-22

COMPONENTS AND SYSTEMS SERVED BY
CONDENSATE STORAGE AND TRANSFER SYSTEM

COMPONENT/SYSTEM	USAR SECTION
Condenser air removal system	10.4.2
Condenser hotwells	10.4.1
Condensate demineralizer	10.4.6
Auxiliary steam condensate recovery and storage tank	9.5.9
Auxiliary feedwater pumps	10.4.9

TABLE 9.2-23

SUMMARY OF REACTOR MAKEUP WATER REQUIREMENTS

Connection to System	Minimum(1) Required Flow (gpm)	Purposes	
Boric acid blending tee(2)	120	To dilute the concentrated boric acid as required.	
Boric acid blending tee	120	To supply makeup water to the refueling water storage tank (RWST).	
Chemical mixing tank	1	For chemical addition.	
Boric acid batch tank	80	Used in the production of the boric acid solution.	
Boron thermal regeneration demineralizers	60	Alternate bed regeneration.	
Emergency boration fill line	5	To flush the line.	
Recycle evaporator package	11	To flush the package.	(3)
Recycle evaporator reagent tank	5	To flush the tank and to provide makeup water.	(3)
Recycle evaporator condensate demineralizer	55	Water cleanup of RMWST.	(3)
Pressurizer relief tank	150 @ 90 psig	For alternate cooling.	
Reactor coolant pump standpipes	10	Provide periodic degassed purge water to the RCP #3 seal on demand.	
Chemical drain tank	5	To flush waste from drumming line back into tank.	

TABLE 9.2-23 (Sheet 2)

Connection to the System	Minimum(1) Required Flow (gpm)	Purposes
Waste evaporator package	11	To flush package. (3)
Waste evaporator reagent tank	5	To flush tank and to provide makeup water.
Catalytic hydrogen recombiner	5	To force gases out of equipment prior to maintenance.
Waste gas compressor	5	Compressor seal usage.
Gas decay tanks	30 @ 100 psig	Displace gas in decay tanks prior to maintenance.
Liquid radwaste demineralizer skid	20	Flush
Evaporator bottoms tank & pump (primary & secondary)	20	To flush tank pump and associated piping for maintenance.
Spent resin storage tank (secondary)	20	To flush waste from drumming line back into tank and to provide demineralizer sluicing water to the tank.
Resin charging tanks (radwaste & CVCS)	20 each	To provide sluicing water
Spent resin storage tank (primary)	20	To flush waste from drumming line back into tank and to provide demineralizer sluicing water to tank.
Sample sinks	5	General laboratory requirements.
Fuel storage pool	20	Fuel storage pool water makeup.
Cask washdown pit	40	Decontamination of the spent fuel shipping cask.

TABLE 9.2-23 (Sheet 3)

Connection to the System	Minimum(1) Required Flow (gpm)	Purposes	
Spray booth	40	For preliminary decontamination prior to use in the chemical tanks.	
Decontamination exhaust scrubbers	0.5	Water supply to scrubber unit.	
Reactor vessel head storage area	40	Decontamination of the reactor vessel head.	
Secondary liquid waste evaporator	22/55	To provide makeup and periodic flushing.	(3)
Demineralized water degasifier	120	To remove dissolved oxygen in reactor makeup water.	
Electrical control and hydraulic power unit	3	To provide makeup to ECH power unit reservoir.	

Notes: (1) Intermittent services. Atmospheric pressure at the connection unless otherwise specified.

(2) Maximum letdown rate.

(3) Equipment permanently out of service.

TABLE 9.2-24

COMPONENTS COOLED BY THE
CLOSED COOLING WATER SYSTEM

Equipment Description	Number/ in Use	Flow Each (gpm)	Total Flow (gpm)	Duty Each (Btu/hr)	Total Duty (Btu/hr)
Generator isophase bus duct coolers	2/1	149	149	1.5×10^6	1.5×10^6
Steam generator feed pump turbine lube oil coolers	4/2	240	480	6.0×10^5	1.2×10^6
Generator exciter air cooler	1/1	205	205	3.6×10^5	3.6×10^5
EHC coolers	2/1	30	60	4.3×10^4	4.3×10^4 (1)
Condensate pump motor bearing oil coolers	3/3	8	24	1.5×10^4	4.6×10^4
Secondary system sample coolers	12/12	7 (4)	80	Varies	8.5×10^5
Heater drain pump motor bearing oil coolers	2/2	6	12	3.4×10^4	6.8×10^4
Auxiliary boiler and auxiliary steam reboiler sample coolers	2/2	7	14	4.9×10^3	9.7×10^3 (5)
Steam generator wet layup recirculation sample coolers	4/4	7	28	4.9×10^3	1.9×10^4 (2)
Feedwater corrosion product sample cooler	1/1	4	4	5.2×10^4	5.2×10^4
Heater drain Corrosion product Sample cooler	1/1	4	4	5.2×10^4	5.2×10^4
Degasifier Vacuum Pumps	2/1	3	3	1.9×10^4	1.9×10^4 (2)
SGFP HPU coolers	4/2	10	20	2.5×10^4	5.0×10^4
Total			1,045 (3)		4.22×10^6

NOTES:
(1) Flow is to two coolers but heat load is only from one cooler.
(2) Used only during plant shutdown, not included in total duty or total flow.
(3) Total system flow may differ slightly from pump design flow.
(4) Sample Cooler ERM13 has a flow rate of 3 GPM.
(5) The Aux Boiler Sample Cooler is normally not in operation and is not included in total duty or total flow.

Table 9.2-25

MINIMUM ESW TOTAL SYSTEM TEMPERATURE RISE

Case 1

The minimum possible ESW temperature rise is 0.55F. This could occur on one train of ESW after a cold shutdown when containment coolers are no longer needed or required and the corresponding train of CCW is not operating. 0.55F is due to the energy input from the ESW pump.

Case 2

The minimum design ESW temperature rise is 0.72F. This could occur after a cold shutdown when containment coolers are no longer needed or required and the corresponding train of CCW is operating without any significant load. 0.72F is due to the energy input from the ESW pump (0.55F) and one CCW pump (0.17F).

Case 3

The minimum ESW temperature rise in Modes 1, 2, 3 or 4 would be 0.87F for the train not carrying CCW. 0.87F is due to the energy input from the ESW pump (0.55F) and one containment air cooler (0.32F). In Modes 1, 2, 3 or 4 all four containment coolers are normally in operation, but by design only three containment coolers are needed for normal operation in the winter. Likewise, only one train of CCW is required to be in operation.

Case 4

The minimum ESW temperature rise in Modes 1, 2, 3 or 4 would be 2.98F for the train carrying CCW. 2.98F is due to the energy input from the ESW pump (0.55F), one CCW pump (0.17F), normal CCW system loads (1.62F), and two containment coolers (0.32F each).

Case 5

The minimum ESW temperature rise following loss of off site power is 1.17F. 1.17 is due to the energy input from the ESW pump (0.55F) and one EDG (0.62F).

Note

Other accidents or events may differ, but the minimum ESW temperature will be bounded by Case 3 when in Modes 4 or above, and by case 2 in Modes 5 or below.

TABLE 9.2-26

CONDENSATE STORAGE AND TRANSFER SYSTEM COMPONENT DATA

Non-Safety Auxiliary Feedwater Pump

Quantity	1
Type	Horizontal centrifugal, multistage, split case
Nominal capacity, gpm	500
TDH, ft.	3,460
NPSH required, ft.	32
NPSH available, ft. (nominal)	45
Material	
Case	Alloy steel
Impellers	Stainless steel
Shaft	Stainless steel
Design code	Not applicable
Seismic design	Non-seismic
Driver	
Type	Electric motor
Horsepower, hp	700
RPM	3,575
Power supply	4,160 V, 60 Hz, 3-phase
Design code	NEMA
Seismic design	Non-seismic

WOLF CREEK
UPDATED SAFETY ANALYSIS REPORT

FIGURE 9.2-6A

HEAT REJECTION RATE
TO ULTIMATE HEAT SINK
LOCA

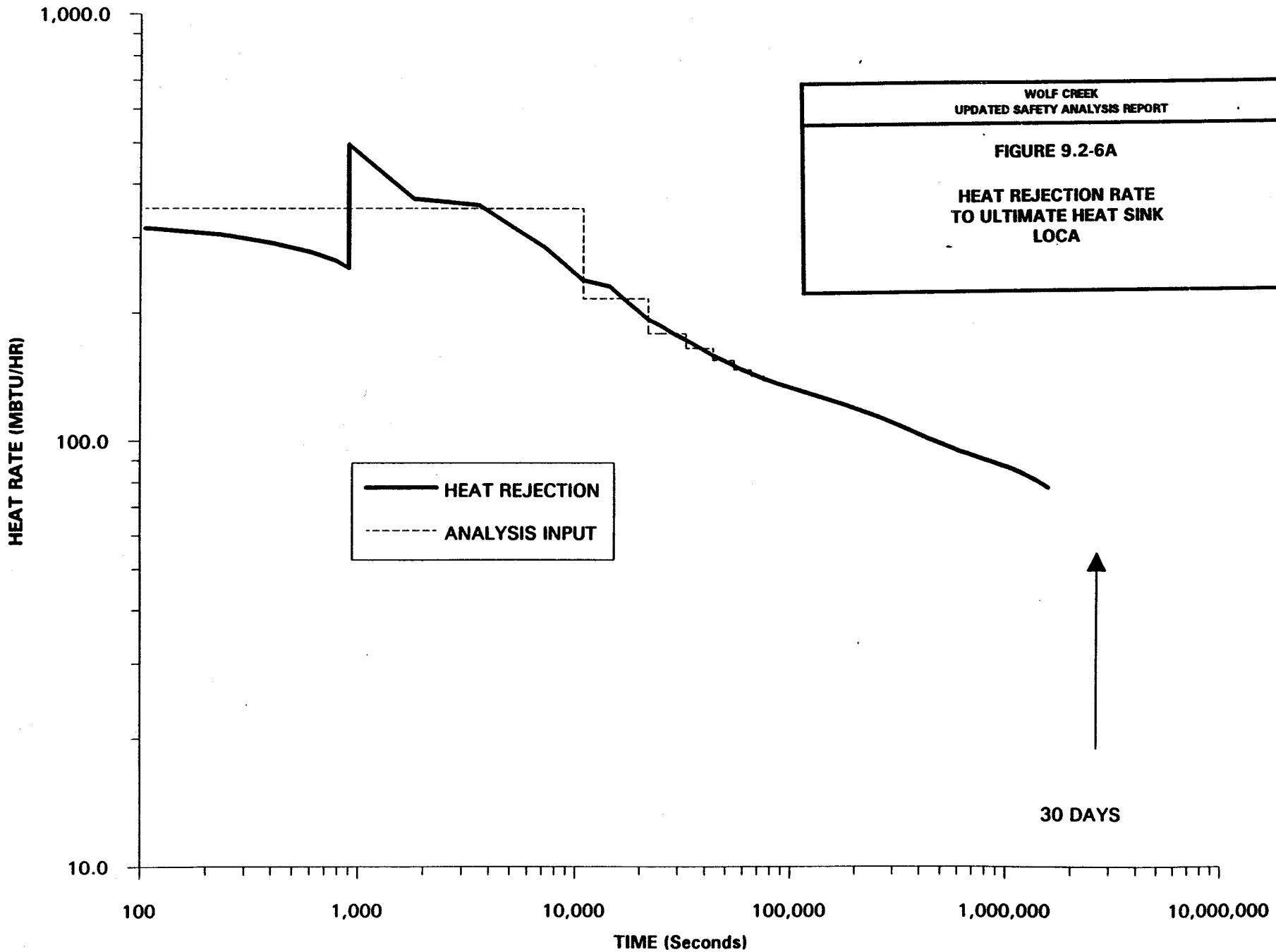

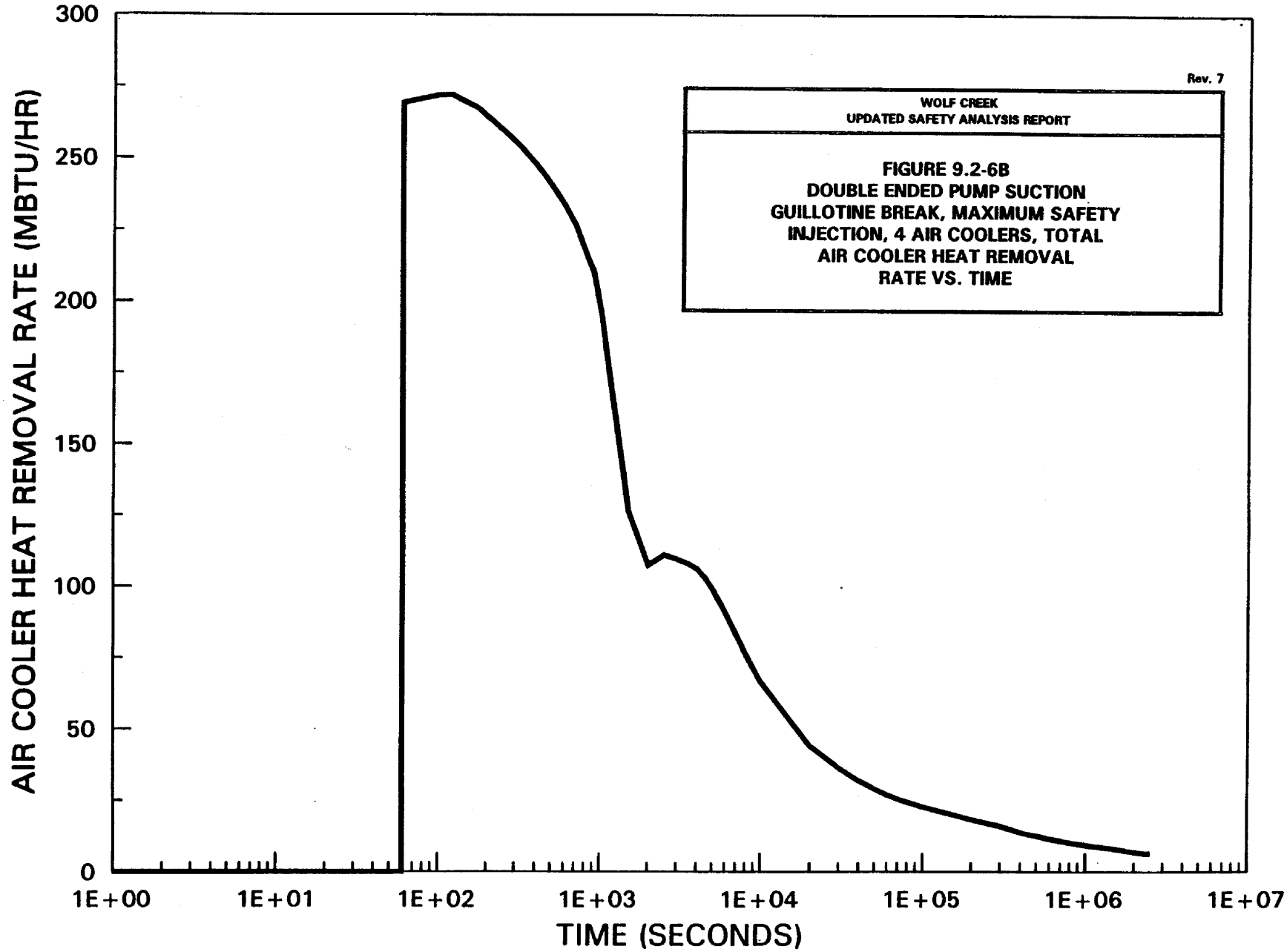

Rev. 7

WOLF CREEK
UPDATED SAFETY ANALYSIS REPORT

FIGURE 9.2-6B
DOUBLE ENDED PUMP SUCTION
GUILLOTINE BREAK, MAXIMUM SAFETY
INJECTION, 4 AIR COOLERS, TOTAL
AIR COOLER HEAT REMOVAL
RATE VS. TIME

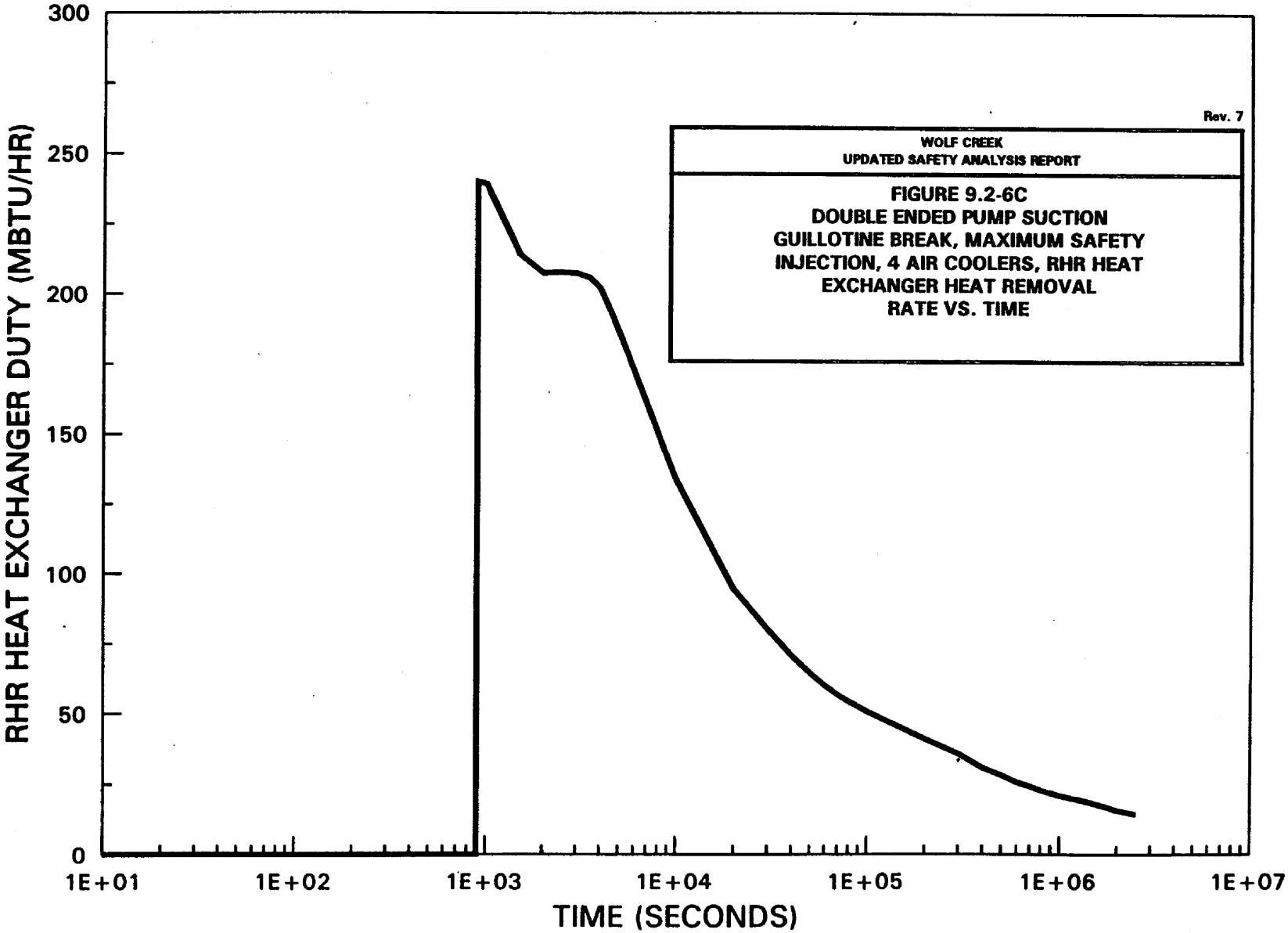

Rev. 7

WOLF CREEK
UPDATED SAFETY ANALYSIS REPORT

FIGURE 9.2-6C
DOUBLE ENDED PUMP SUCTION GUILLOTINE BREAK, MAXIMUM SAFETY INJECTION, 4 AIR COOLERS, RHR HEAT EXCHANGER HEAT REMOVAL RATE VS. TIME

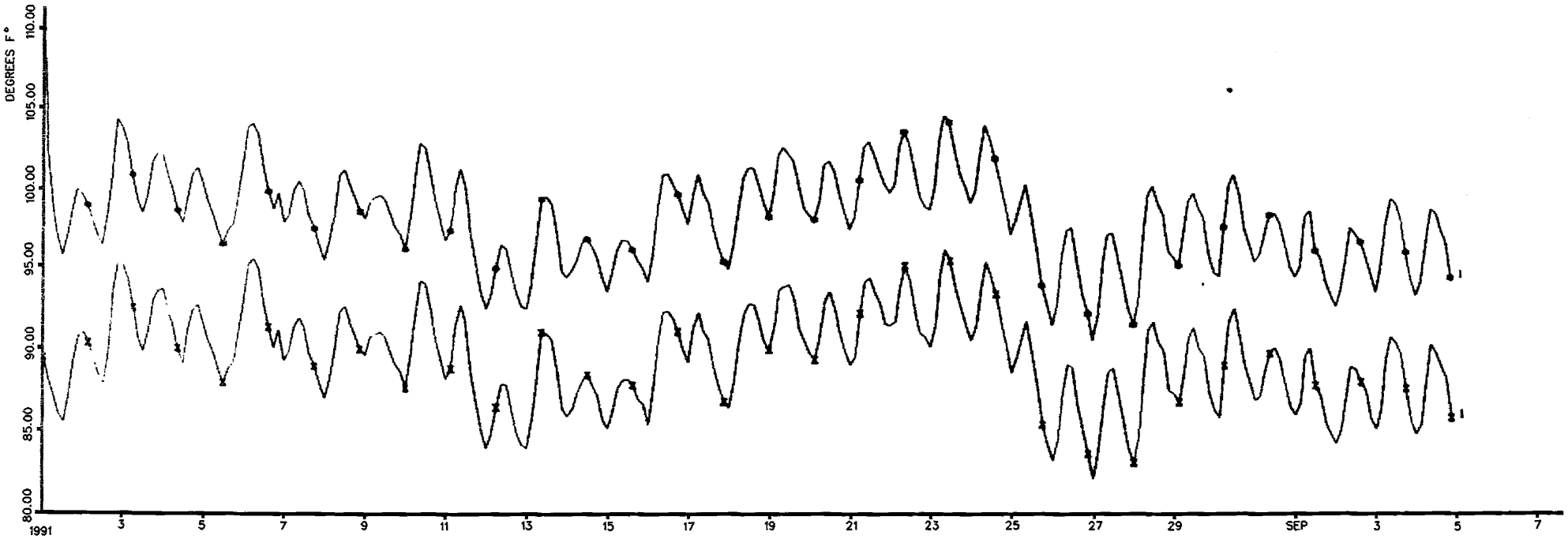

PLANT DISCHARGE AND INTAKE TEMPERATURES DURING LOCA
WITH WORST TEMPERATURE WEATHER PERIOD

Rev. 5

WOLF CREEK
UPDATED SAFETY ANALYSIS REPORT

FIGURE 9.2-7

ULTIMATE HEAT SINK
INLET AND OUTLET TEMPERATURES
WORST TEMPERATURES PERIOD

* UHS INLET TEMPERATURE
x UHS OUTLET TEMPERATURE

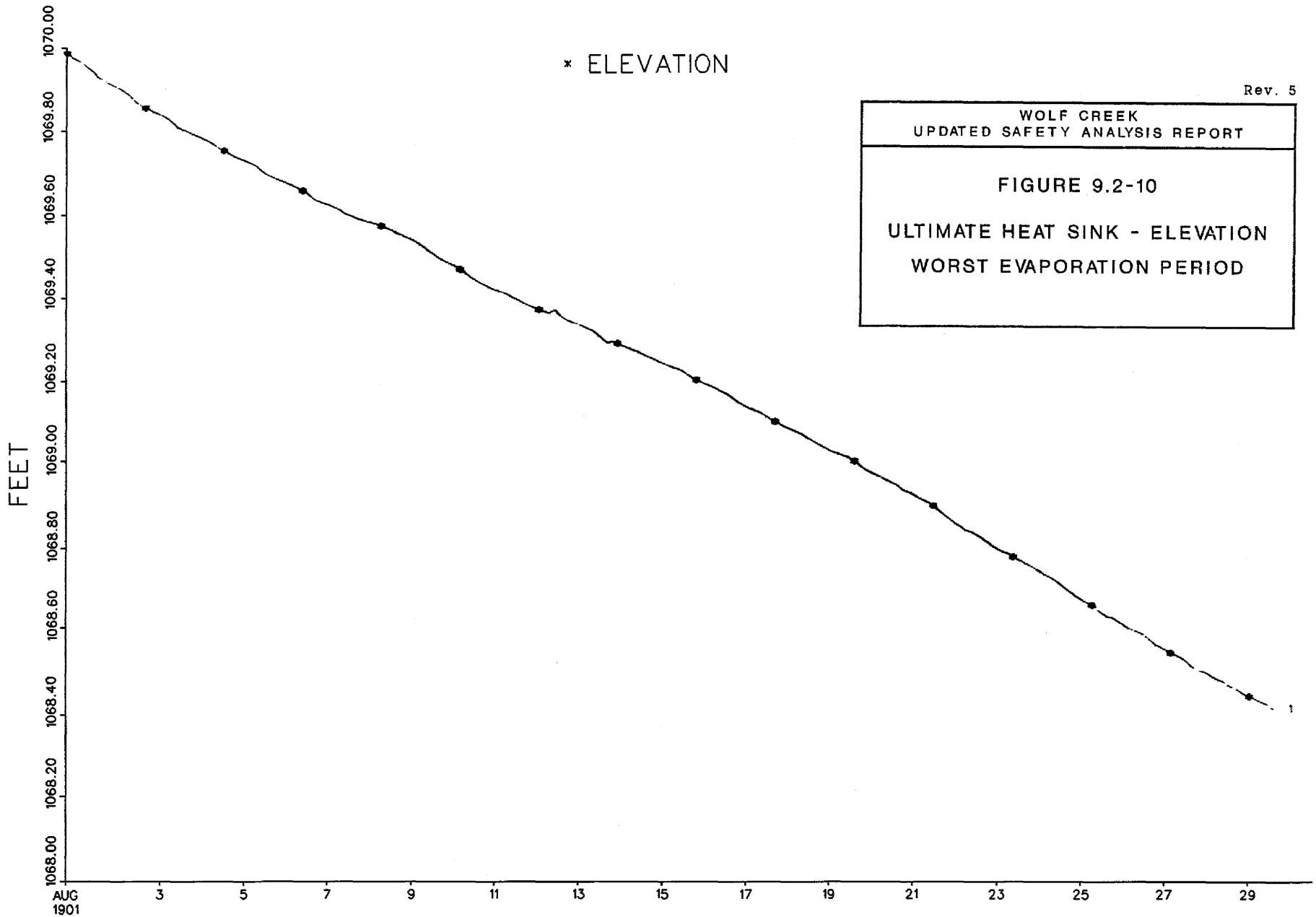

Rev. 5

WOLF CREEK
UPDATED SAFETY ANALYSIS REPORT

FIGURE 9.2-10

ULTIMATE HEAT SINK - ELEVATION
WORST EVAPORATION PERIOD

FIG. 10 ELEVATION OF UHS DURING LOCA WITH WORST EVAPORATION WEATHER PERIOD

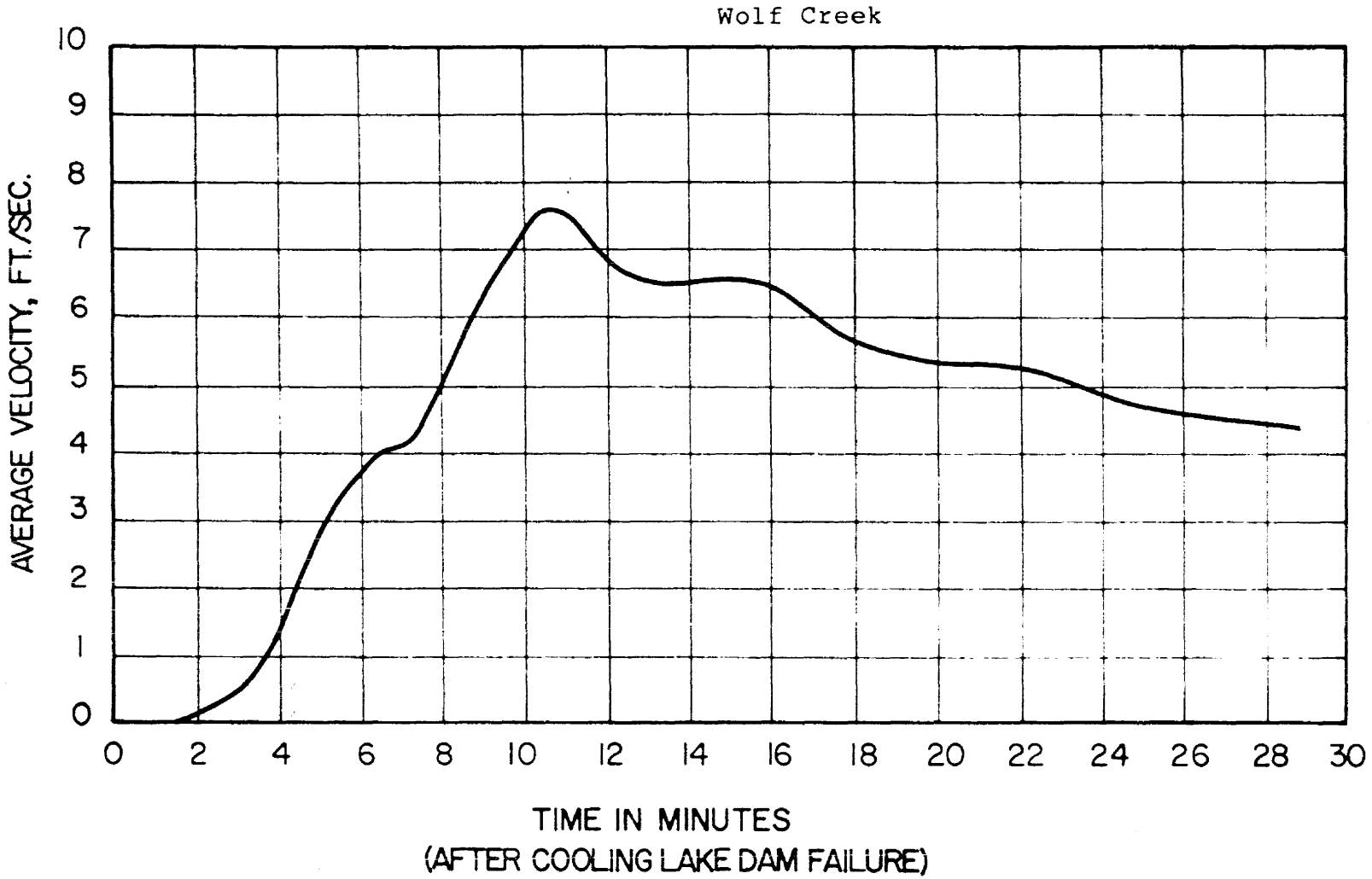

Rev. 0

WOLF CREEK
UPDATED SAFETY ANALYSIS REPORT

FIGURE 9.2-11

TRANSIENT VELOCITY AT WOLF CREEK UHS LOCATION - CASE I

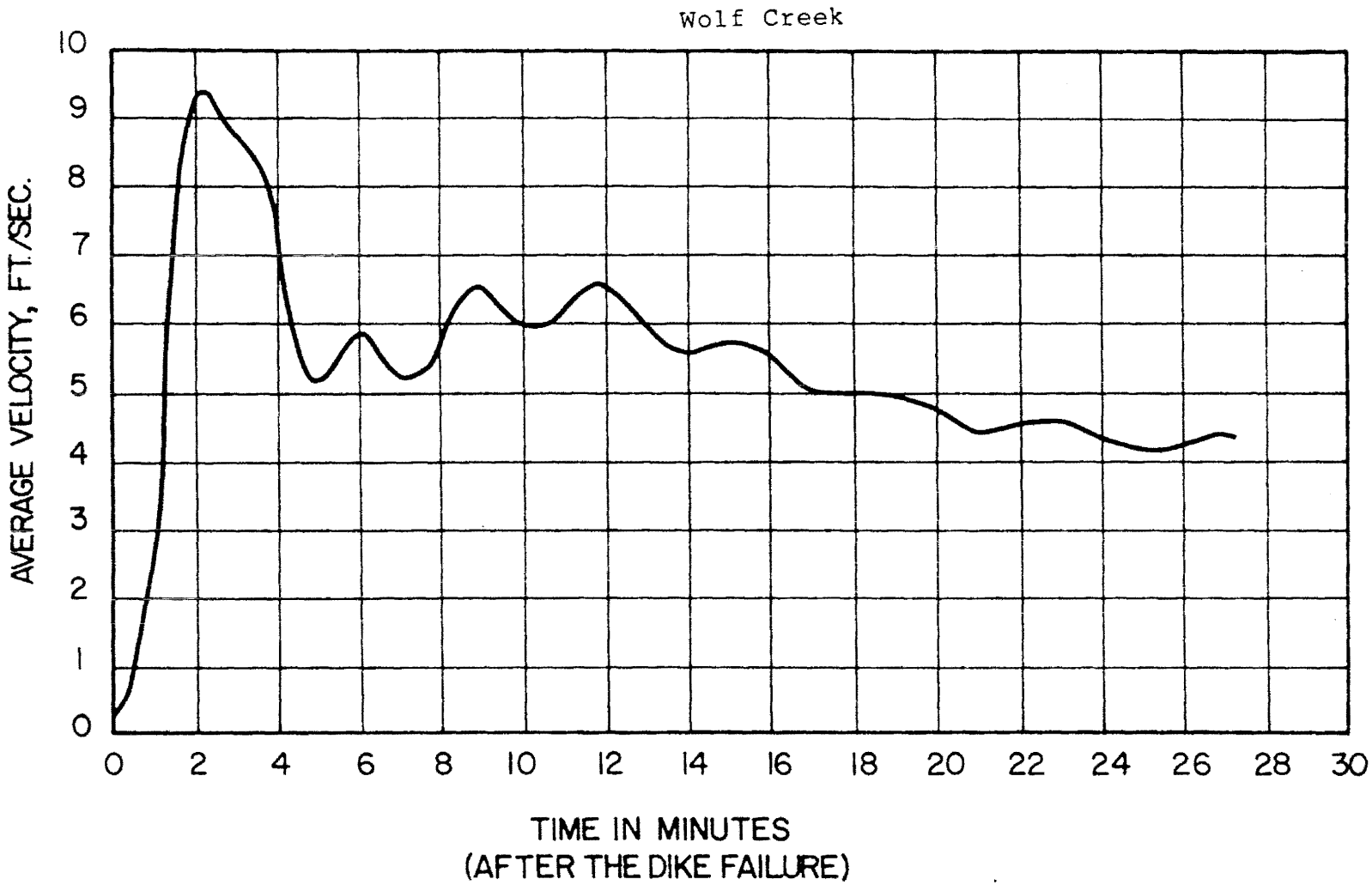

Rev. 0

WOLF CREEK
UPDATED SAFETY ANALYSIS REPORT

FIGURE 9.2-12

TRANSIENT VELOCITY AT WOLF CREEK
UHS LOCATION - CASE II

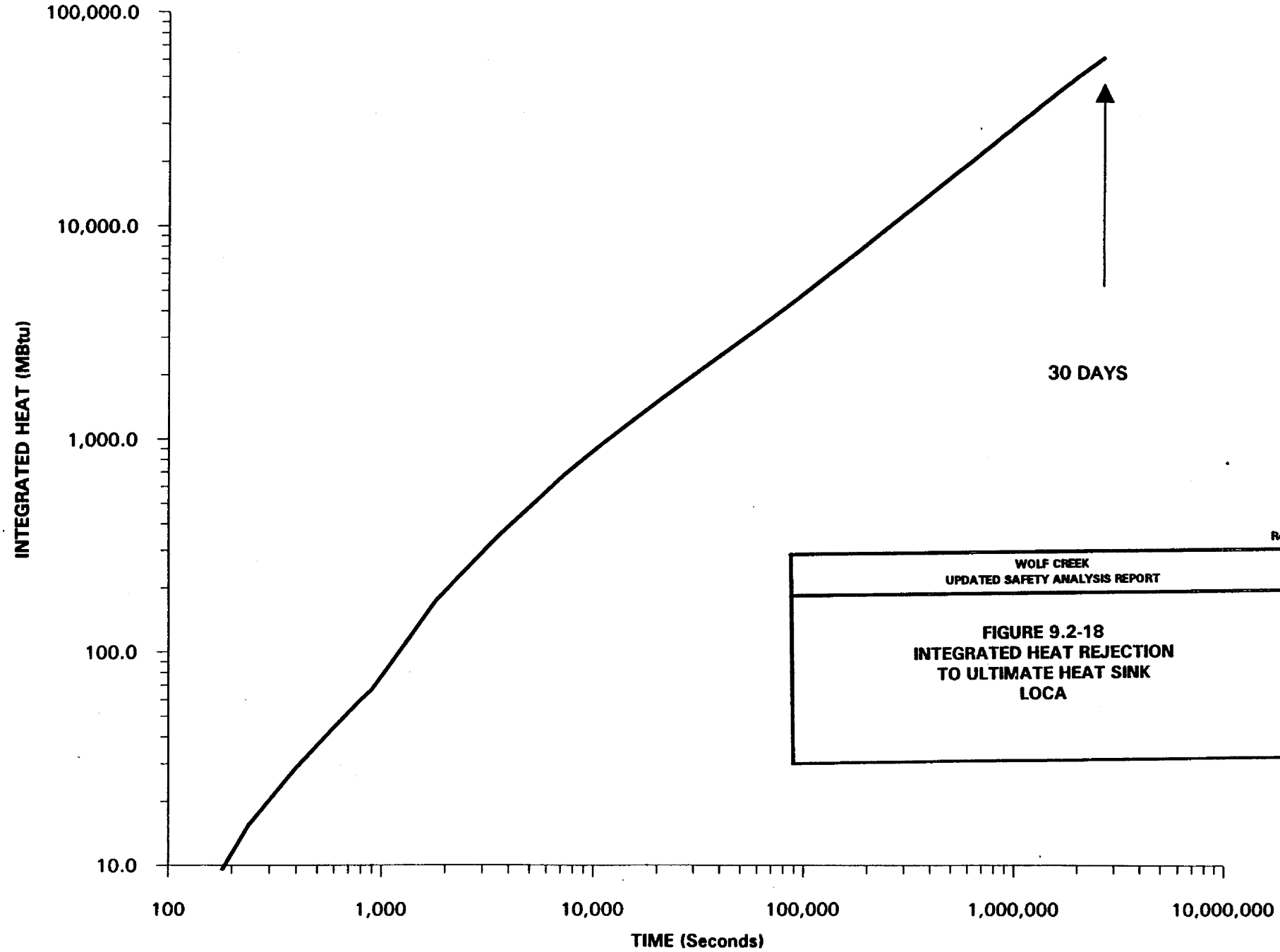

Rev. 7

WOLF CREEK
UPDATED SAFETY ANALYSIS REPORT

FIGURE 9.2-18
INTEGRATED HEAT REJECTION
TO ULTIMATE HEAT SINK
LOCA

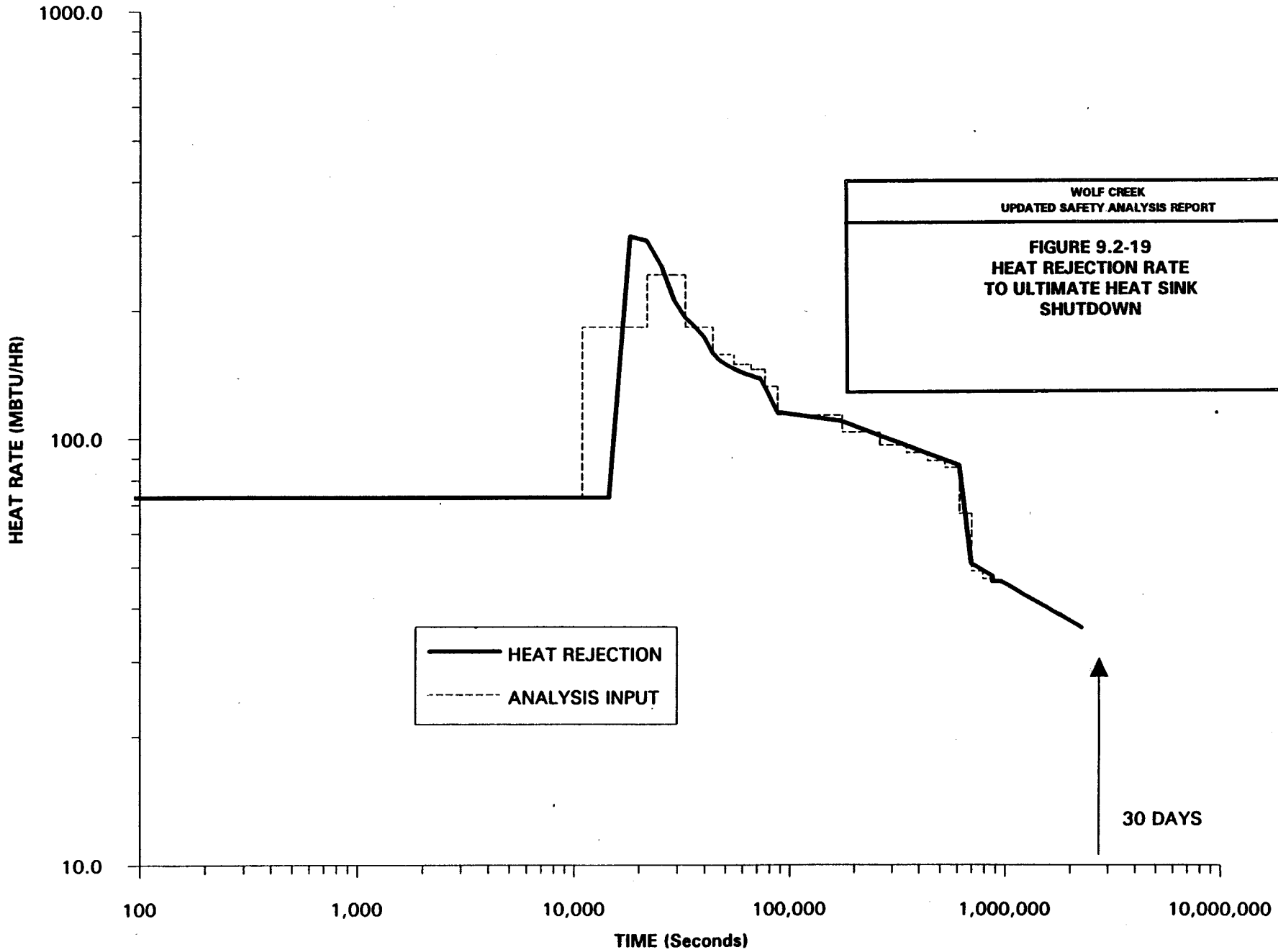

Rev. 7

WOLF CREEK
UPDATED SAFETY ANALYSIS REPORT

FIGURE 9.2-19
HEAT REJECTION RATE
TO ULTIMATE HEAT SINK
SHUTDOWN

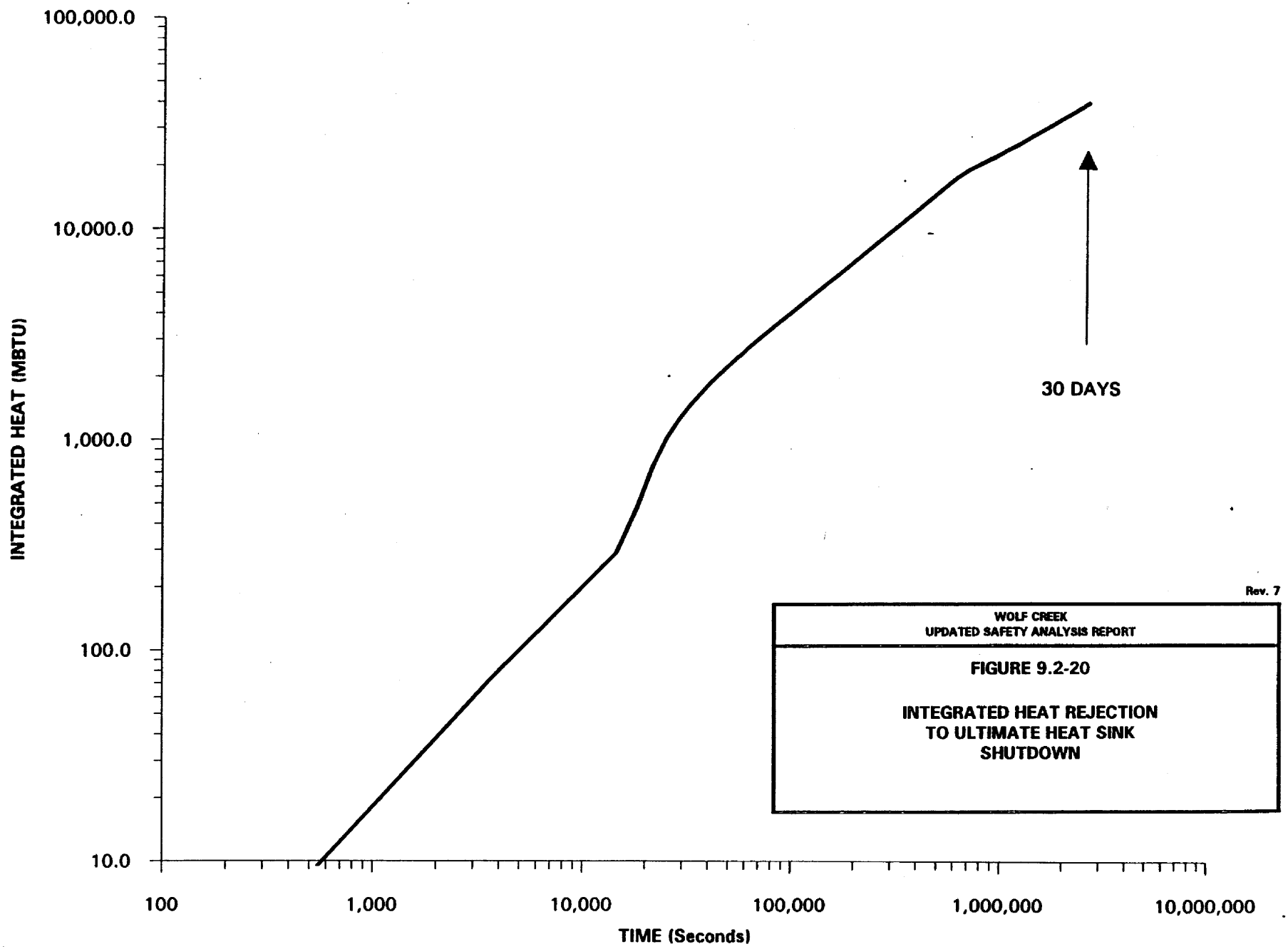

Rev. 7

WOLF CREEK
UPDATED SAFETY ANALYSIS REPORT

FIGURE 9.2-20

INTEGRATED HEAT REJECTION
TO ULTIMATE HEAT SINK
SHUTDOWN

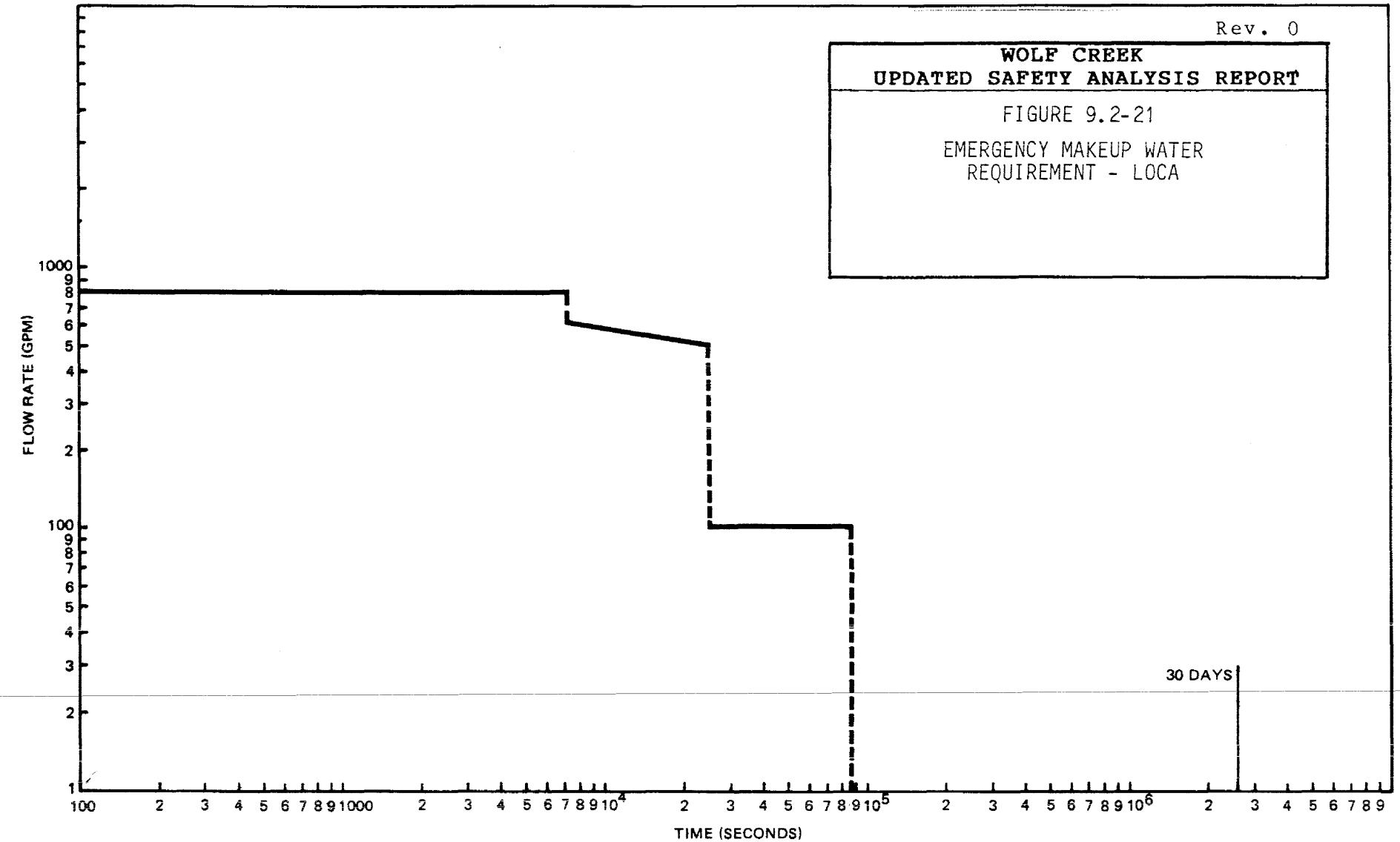
Rev. 0
WOLF CREEK
UPDATED SAFETY ANALYSIS REPORT
FIGURE 9.2-21
EMERGENCY MAKEUP WATER
REQUIREMENT - LOCA
FLOW RATE (GPM)
1000
100
30 DAYS
TIME (SECONDS)
100
1000
10^4
10^5
10^6

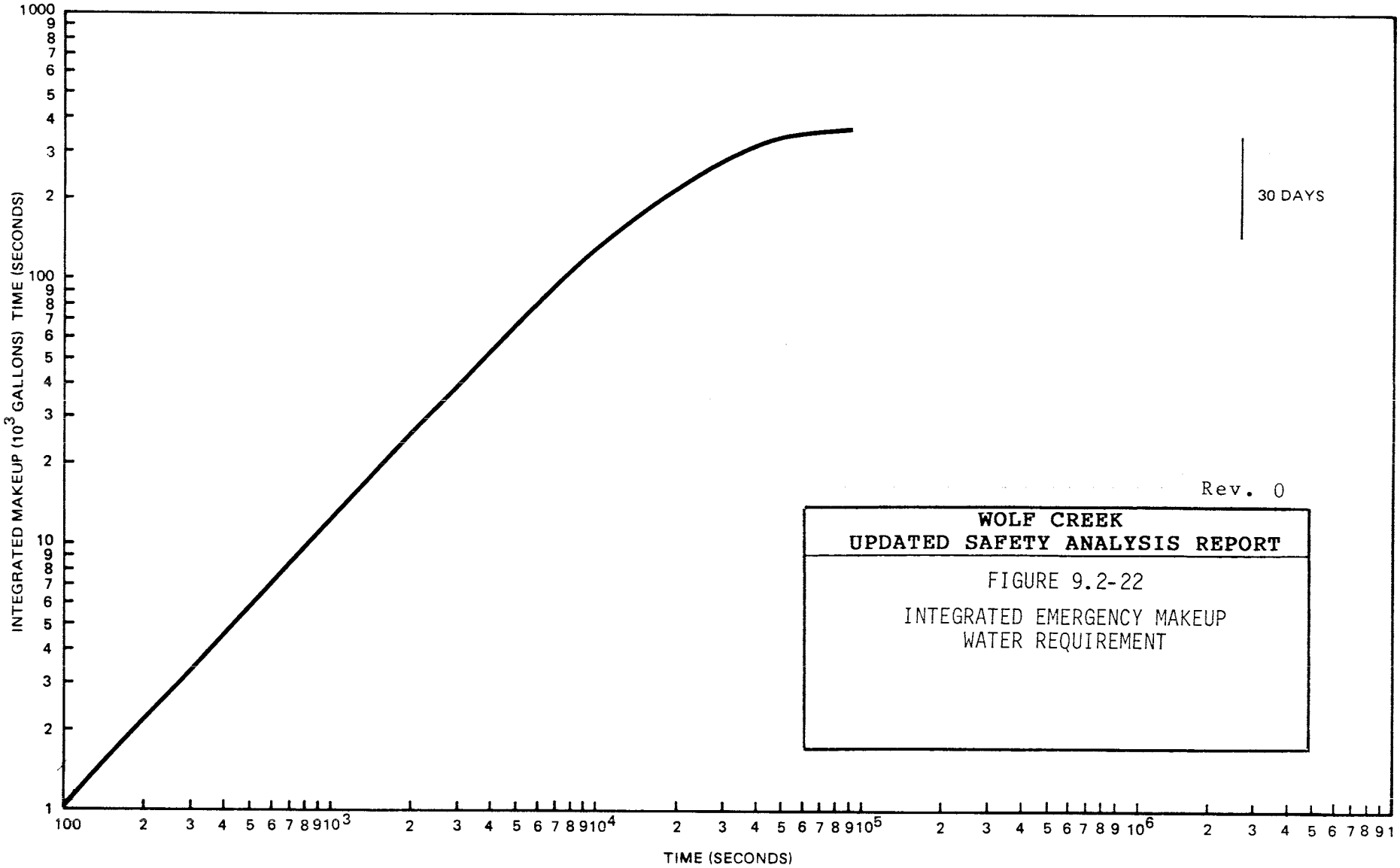

Rev. 0

WOLF CREEK
UPDATED SAFETY ANALYSIS REPORT

FIGURE 9.2-22

INTEGRATED EMERGENCY MAKEUP WATER REQUIREMENT

9.3 PROCESS AUXILIARIES

9.3.1 COMPRESSED AIR SYSTEM

The compressed air system (CAS) provides a reliable, continuous supply of filtered, dry, and oil-free air for instrument and control operations. The system also provides station air at service outlets throughout the plant for operation of pneumatic tools and other service requirements.

The CAS provides a reliable backup supply of compressed gas for the main feedwater control valves. The system also provides a safety-related backup compressed gas supply for the auxiliary feedwater control valves and the main steam atmospheric relief valves.

9.3.1.1 Design Bases

9.3.1.1.1 Safety Design Bases

The following safety design bases are applicable to the safety-related functions of containment isolation, the 8-hour backup air supply for the auxiliary feedwater control valves and the 8-hour backup air supply for the main steam atmospheric relief valves.

SAFETY DESIGN BASIS ONE - Portions of the CAS are protected from the effects of natural phenomena, such as earthquakes, tornadoes, hurricanes, floods, and external missiles (GDC-2).

SAFETY DESIGN BASIS TWO - Portions of the CAS remain functional after an SSE and perform their intended function following postulated hazards of fire, internal missiles, or pipe break (GDC-3 and 4).

SAFETY DESIGN BASIS THREE - Component redundancy is provided so that safety functions are performed, assuming a single active component failure coincident with the loss of offsite power (GDC-34).

SAFETY DESIGN BASIS FOUR - Active components of the CAS are capable of being tested during plant operation. Provisions are made to allow for inservice inspection of components at appropriate times specified in the ASME Boiler and Pressure Vessel Code, Section XI.

SAFETY DESIGN BASIS FIVE - The CAS is in accordance with the quality group classification assigned by Regulatory Guide 1.26 and the seismic category assigned by Regulatory Guide 1.29. The power supply and control functions are in accordance with Regulatory Guide 1.32.

SAFETY DESIGN BASIS SIX - The containment isolation valves in the system are selected, tested, and located in accordance with the requirements of 10 CFR 50, Appendix A, General Design Criteria 54 and 56, and 10 CFR 50, Appendix J Type C Testing.

9.3.1.1.2 Power Generation Design Bases

POWER GENERATION DESIGN BASIS ONE - The CAS provides compressed air for service outlets located throughout the plant and a continuous supply of filtered, dried, and essentially oil-free air for pneumatic instruments and valves.

POWER GENERATION DESIGN BASIS TWO - The combined air receiver storage capacity is adequate to supply instrument air requirements for enough time to allow the standby compressor to come up to pressure in the event of an operating compressor failure.

POWER GENERATION DESIGN BASIS THREE - The CAS has the capability of providing instrument air during loss of offsite power.

POWER GENERATION DESIGN BASIS FOUR - The CAS serving the main feedwater control valves provides a nonseismically qualified, nonsafety-related backup compressed gas system that will provide 4 hours of reliable compressed gas in the event of the loss of the normal air supply.

9.3.1.2 System Description

9.3.1.2.1 General Description

The CAS includes four skidmounted, at least 100-percent-capacity air compressing trains. Three main units consist of an air inlet filter/silencer, a compressor unit, an aftercooler, an air receiver, and interconnecting piping and valving. The three air receivers are connected in parallel by a common header which branches into the instrument air and service air subsystems. Service air goes directly to distribution, while instrument air first passes through a drying/filtering train. A piping connection is provided to allow the construction air connection source, with administrative restrictions, to be used as an instrument air supply. All of the above components are located in the turbine building. Localized compressed gas cylinders and control valves are provided for the backup gas supply systems. Safety-related pneumatically operated valves are listed in Table 9.3-2. The CAS is shown in Figure 9.3-1.

In addition, the fourth air compressing train, located outside the turbine building provides additional air for the service air side of the Compressed Air System. The fourth air compressor is currently out of service due to TMO 16-004-GB. This train consists of an air inlet filter/silencer, a compressor unit, an aftercooler, a refrigerated air dryer, and interconnecting piping and valving. This air compressor is located outside on the west side of the Turbine Building. The refrigeration unit is located inside the Turbine Building in the west corridor.

9.3.1.2.2 Component Description

COMPRESSORS - The three 932 scfm air compressors are rotary, non-lubricated, water cooled, two-stage, motor driven units. Each of the compressors is rated to deliver 932 scfm at 125-psig discharge pressure. The compressors are sized so that each can supply an adequate supply of air for average instrument air requirements. Two of the compressors are non-Class IE devices which are powered from different Class IE busses, and the third is powered from a non-Class IE bus. The two compressors powered by the Class IE busses are cooled by service water during normal plant operation and essential service water for all loss of offsite power conditions. Both compressors are shed from the Class IE busses on a safety injection signal but may be realigned to the busses manually. The third air compressor, powered from a non-Class 1E bus, is cooled by central chilled water system.

A fourth air compressor is an air cooled motor driven, lubricated, rotary screw air compressor. This unit is rated to deliver 1500 scfm at system pressure, and is powered off the non-Class IE bus. This train is provided with air filtration and refrigerated air drying capability sufficient to meet Service Air Component user requirements. It is currently out of service for TMO 16-004-GB.

AFTERCOOLERS - Each of the three main compressors is provided with an aftercooler to cool the flow of air from the associated air compressor to 110 F. The aftercoolers are TEMA Class C air/water heat exchangers cooled from the same water system as the air compressors. The fourth air compressor has an air/air after-cooler train backed up with a refrigerated air dryer, which is currently out of service with TMO 16-004-GB. This air-cooler also cools the compressor’s lubricating oil.

AIR RECEIVERS - Compressed air from the outlet of each aftercooler on the main air compressors flows through one of the three air receivers. The air receivers serve as storage volume to supply a limited amount of compressed air following a compressor failure. The combined volume of the three air receivers is sized to allow time for a standby compressor to come up to pressure. The air receiver design pressure is 125 psig.

DRYER/FILTER TRAIN - The instrument air dryer/filter train consists of a series arrangement of two parallel prefilters, two parallel dual tower dryer units, and two parallel afterfilters. One or both parallel trains may be in use as required. Parallel filters allow cleaning or changing of filters during one train system operation by diverting air flow through the parallel filter. Each air dryer section consists of an interconnected set of two desiccant chambers. Air flow is automatically alternated through each chamber and the drying of desiccant in the other chamber. Drying of the desiccant is accomplished by depressurizing the dessicant chamber and purging dry air through it. Permanent valving is provided such that temporary connections can be given so that the instrument air may be processed via a portable filter/dryer unit.

ACCUMULATORS - The backup gas systems provided for the auxiliary feedwater control valves, main feed control valves, and main steam atmospheric relief valves as part of the compressed air system utilize carbon steel accumulators to store nitrogen for use in the event of loss of operation of the CAS. The supply of nitrogen is from the service gas system (see Section 9.3.5). The main feedwater control valve accumulator and the auxiliary feedwater control valve/main steam atmospheric relief valves accumulators are designed to ASME Section III, Class 3. Accumulators have design and operating pressures as noted in Table 9.3-1. The accumulator system is shown in Figure 9.3-1. The main feed pump mini flow valves receive backup gas pressure directly from the low pressure nitrogen system.

9.3.1.2.3 System Operation

The CAS provides a reliable, continuous supply of filtered, dry, and essentially oil-free instrument air for pneumatic instrument operation and the control of pneumatic valves. The CAS also supplies service air to service outlets throughout the plant for the operation of pneumatic tools and other service requirements.

One of the three main air compressors is normally available for instrument air service at all times, and the other compressors are on standby. In the event of loss of the operating compressor or heavy loads, the resulting low pressure initiates an automatic start of a standby compressor. If the pressure continues to drop, a second and if necessary, a third standby compressor comes on line. Automatic starts occur only on low pressure. The three instrument air side compressors automatically load and unload in response to small system pressure variations to minimize the amount of compressor starts and stops required. The compressor automatically shuts down after running unloaded for 15 minutes. The sequence of compressor starting can be varied to permit equal operating time for all three air compressors. System functions and abnormal conditions are annunciated in the control room.

The discharge line from each air receiver is connected in parallel to a common header. The service air subsystem takes its supply from this common header for direct distribution to the service air outlets located throughout the plant. The instrument air subsystem is supplied from this common header to the dryer/filter train, where the air is processed to the required cleanliness and dew point. The train provides air meeting industry standards and design specifications.

The service air line is provided with an isolation valve that will automatically isolate the service air subsystem from the compressed air supply when the service air header pressure drops below 110 psig. This arrangement is provided to direct all of the compressed air to the instrument air subsystem to maintain instrument air pressure in the event of excessive demand.

The accumulator backup gas system is designed to supply compressed gas to designated valves in the event of the loss of the normal instrument air supply. A check valve in the nitrogen supply line feeding each accumulator and a check valve in the instrument air supply line feeding the valve actuators prevent stored N2 from being vented from the accumulator during any loss of pressure in the nitrogen feed and/or normal instrument air supply line.

The pressure-reducing valve downstream of each accumulator is manually adjusted to supply accumulator air below the nominal instrument air line pressure. A relief valve is provided for each accumulator and in the pipe downstream of each pressure-reducing valve.

9.3.1.3 Safety Evaluation

Safety evaluations are numbered to correspond to the safety design bases of Section 9.3.1.1.

SAFETY EVALUATION ONE - The safety-related portions of the CAS are located in the reactor and auxiliary buildings. These buildings are designed to withstand the effects of earthquakes, tornadoes, hurricanes, floods, external missiles, and other appropriate natural phenomena. Sections 3.3, 3.4, 3.5, 3.7(B), and 3.8 provide the bases for the adequacy of the structural design of these buildings.

SAFETY EVALUATION TWO - The safety-related portions of the CAS are designed to remain functional after an SSE. Sections 3.7(B).2 and 3.9(B) provide the design loading conditions that were considered. Sections 3.5 and 3.6 provide the hazards analyses to assure that a safe shutdown, as outlined in Section 7.4, can be achieved and maintained.

SAFETY EVALUATION THREE - The safety-related portions of the CAS are completely redundant. Therefore, no single failure will compromise the system's safety functions. All vital power can be supplied from either onsite or offsite power systems, as described in Chapter 8.0.

SAFETY EVALUATION FOUR - The CAS is initially tested with the program given in Chapter 14.0. Periodic inservice functional testing is done in accordance with Section 9.3.1.4. Section 6.6 provides the ASME Boiler and Pressure Vessel Code, Section XI requirements that are appropriate for the system.

SAFETY EVALUATION FIVE - Section 3.2 delineates the quality group classification and seismic category applicable to the safety-related portion of this system and supporting systems. Table 9.3-1 shows that the components meet the design and fabrication codes given in Section 3.2. All the power supplies and controls necessary for safety-related functions of the CAS are Class 1E, as described in Chapters 7.0 and 8.0.

SAFETY EVALUATION SIX - Sections 6.2.4 and 6.2.6 provide the safety evaluation for the system containment isolation arrangement and testability.

9.3.1.4 Tests and Inspections

Preoperational testing is described in Chapter 14.0.

Leaktight integrity of the CAS is demonstrated by a hydrostatic test performed per the requirements of applicable codes.

Air compressors and associated components on standby can be checked and operated periodically. Air filters are inspected for cleanliness, and the desiccant is changed when it no longer performs according to the manufacturer's specifications.

During the initial plant testing prior to reactor startup, all engineered safety features systems utilizing compressed air were tested to ensure fail-safe operation upon loss of compressed air pressure.

The compressed gas accumulator systems can be isolated from the regular compressed air system and tested to ensure proper operation characteristics.

Inservice inspections are performed for the safety-related portions of the system per the technical requirements of ASME Section XI, as described in Section 6.6.

9.3.1.5 Instrumentation Applications

The compressors and associated equipment are provided with local control panels. Each panel consists of temperature and pressure switches, indicators, and automatic protection devices. Indicating lights are located in the control room to indicate equipment status. Control room alarm is provided for air compressor header pressure. Service air/instrument air isolation valve status is also provided in the control room.

The instrument air dryer assembly consists of two dryer units in parallel. Each dryer is equipped with local pressure indicators. Local control panel and control room alarms are provided for high differential pressure across the dryer package, pre-filters, afterfilters, and high package discharge humidity and low package discharge pressure. Local hand switches are provided to permit the operators to open the standby dryer train isolation valves. Control room indication is provided for instrument dryer header pressure.

Control room indication of the pressure and low pressure alarms for each safety-related accumulator are provided along with alarms for low accumulator pressure. Local pressure indicators are provided downstream of the accumulator pressure-reducing valves to permit local monitoring of the system supply pressure.

Local pressure indicators are provided for the air lines feeding the fuel storage pool transfer gate seals to permit local monitoring of the seal pressure.

9.3.2 PLANT SAMPLING SYSTEMS

The plant sampling systems consist of the following subsystems: 1) the nuclear sampling system, which is further divided into the primary sampling system (PrSS), and a radwaste sampling system (RWSS), 2) a process sampling system (PSS) for secondary side sampling, and 3) local grab sample provisions. These subsystems include equipment to collect representative samples of the various process fluids in a safe and convenient manner. The RWSS is located in the radwaste building, the PrSS in the auxiliary building sample room, and the PSS in the turbine building. These systems include sample lines, valves, coolers, and automatic analysis equipment. A description of the equipment comprising these systems and their features relating to safety is presented in this section. Certain process sampling components are discussed in other sections. A safety-related containment hydrogen analyzer provided to monitor the containment atmosphere following a postulated LOCA is described in Section 6.2.5.5.4. A discussion of process radiation monitoring is provided in Section 11.5. A discussion of gas analysis associated with the gaseous radwaste hydrogen recombiner is provided in Section 11.3.

9.3.2.1 Design Bases

9.3.2.1.1 Safety Design Basis

The plant sampling system serves no safety function and has no other safety design basis, except for a containment isolation provision.

SAFETY DESIGN BASIS ONE - The containment isolation valves in the system are selected, tested, and located in accordance with 10 CFR 50, Appendix A, General Design Criteria 54, 55, and 56, and 10 CFR 50, Appendix J, Type C Testing.

9.3.2.1.2 Power Generation Design Basis

POWER GENERATION DESIGN BASIS ONE - The PrSS is designed to collect representative samples of fluids in the reactor coolant system and auxiliary system process streams, as listed in Table 9.3-3, for analysis by the plant operating staff. Chemical and radiochemical analyses are performed on these samples to determine:

1. Boron concentration
2. Fission and corrosion product activity levels
3. Dissolved gas concentration
4. Halide concentration
5. pH and conductivity levels
6. Fission gas content
7. Gas compositions in various vessels

The results are used to:

1. Monitor core reactivity
2. Monitor fuel rod integrity
3. Evaluate ion exchanger and filter performance
4. Specify chemical additions to the various systems
5. Maintain acceptable hydrogen levels in the reactor coolant system.

6. Detect radioactive material leakage

POWER GENERATION DESIGN BASIS TWO - The RWSS is designed to collect samples of the fluids in the radwaste systems, as listed in Table 9.3-4, for analysis by the plant operating staff. Chemical and radiochemical analyses are performed on these samples to determine treatment or disposition of the collected batches.

POWER GENERATION DESIGN BASIS THREE - The PSS is designed to continuously monitor water samples from the turbine cycle systems, as listed in Table 9.3-5. Water quality analyses are performed on these samples to determine:

1. pH and conductivity levels

2. Dissolved oxygen

3. Residual hydrazine

4. Sodium concentration

The above measurements are used to control water chemistry and to permit appropriate corrective action by the operating staff. In addition, grab sample capabilities are provided at each of these monitoring points to monitor other chemical species.

POWER GENERATION DESIGN BASIS FOUR - Local grab sampling stations, as listed in Table 9.3-6, are provided for process points which require heat tracing or sampling at a frequency of not more than once a week.

POWER GENERATION DESIGN BASIS FIVE - The PrSS, RWSS, and PSS are designed and built to the codes listed in Table 3.2-1.

9.3.2.2 System Description

9.3.2.2.1 Primary Sampling System

The PrSS collects samples from the reactor coolant system and the auxiliary systems, as listed in Table 9.3-3, and brings them to a common location in a sample room in the auxiliary building. The PrSS consists of a primary sampling rack and a sampling panel. To minimize the source volume exposed at the primary sampling panel, the sampling station components that retain potentially radioactive fluids, such as sample coolers, isolation valves, throttle valves, rod-in-tube flow control valves, and associated piping and tubing, are mounted on the primary sampling rack.

The rack is located behind a 2-foot-thick concrete wall which provides radiation shielding. The primary sampling panel, located in front of the radiation shield wall, contains the grab sampling facilities. The PrSS is shown in Figure 9.3-2. The PrSS rack contains sample coolers which reduce the temperature of the samples to below 110 F (to permit the safe handling of samples). The PrSS sample coolers are cooled by the component cooling water system. Relief valves protect the system from overpressurization.

After temperature and pressure reduction, the PrSS samples are routed to a manual sample facility within an exhaust-ventilated, hooded enclosure to confine any leakage or spillage of radioactive fluids. Temperature and pressure indicators are provided to verify the sample conditions. Within the vented sampling hood are grab sample points for each stream and the sample pressure vessels. Any liquid leakage is collected in the sink and drained to the floor drain tank or the holdup tank for processing through the liquid radwaste system.

The PrSS is manually operated to provide samples for laboratory analysis, except for steam generator blowdown samples which are continuously monitored for radioactivity by one process radiation monitor (described in Section 11.5) common to the four samples. Sample lines are purged before each sample is drawn to ensure that representative samples are obtained. Continuous monitoring of the water quality of the steam generator blowdown sample is provided on the PSS. The steam generator blowdown sample lines are provided with solenoid valves which are closed automatically if radioactivity approaching the limits discussed in Section 11.5 is detected in the steam generator sample, or if a containment isolation signal occurs. If the steam generator blowdown samples are needed after an automatic closure of the blowdown sample valves due to high radiation, the valves can be opened manually at the nuclear sampling panel. Continuous monitoring of the CVCS letdown line (failed fuel monitor) is discussed in Section 11.5.

The operating conditions of the PrSS are given in Table 9.3-3. The high-pressure reactor coolant system samples are collected at full process pressure and reduced temperature in sample pressure vessels. Samples can also be taken at reduced pressure through the rod-in-tube flow control valves. These vessels are designed for 3,000 psig at 600 F, and are equipped with quick-disconnect couplings to facilitate removal to the radiochemical laboratory for analysis. The RCS hot leg sample lines include a delay coil (sufficiently long tubing run) to permit the decay of N-16 before the sample leaves the containment. The reactor coolant system, chemical and volume control system, and accumulator samples require sufficient purge to ensure representative samples. System

pressure provides the motive force for the purging flows. Purge time is determined for each sample by the flow rate and the individual sample line volume. Primary coolant purge flow is discharged to the volume control tank in the chemical and volume control system. Other purge flows are returned to the auxiliary building floor drain tank and elsewhere, as shown in Figure 9.3-2. The sample sink drain, which may be contaminated with particulates or cleaning solutions, is also routed to the auxiliary building floor drain tank.

9.3.2.2.2 Radwaste Sampling System

The RWSS collects samples from the radwaste systems, as listed in Table 9.3-4, and brings them to the sample room in the radwaste building. The RWSS is manually operated on an intermittent basis to provide samples for laboratory analysis. The RWSS is shown in Figure 9.3-3. The RWSS samples are routed to a manual sample facility within an exhaust-ventilated, hooded enclosure. Within the vented sampling hood are grab sample points for each stream. Sample lines are purged before each sample is drawn to ensure that representative samples are obtained.

The design conditions of the RWSS are given in Table 9.3-4.

9.3.2.2.3 Process Sampling System

The purpose of the PSS is to provide the data necessary to implement procedures for controlling the water quality of the secondary plant systems listed in Table 9.3-5. The PSS, which is located in the turbine building, is shown in Figure 9.3-4.

The operating conditions of the PSS samples are given in Table 9.3-5. Roughing coolers are provided for the samples whose temperatures exceed 140°F. All samples to analyzers, except the corrosion product sample panels, are conditioned by a chilled water, constant-temperature bath. The corrosion product sample panels are located near the points of sample origin.

Samples are analyzed, and the results are used for automatic or manual control of the process fluids. All analyzers are continuously monitoring representative samples. The sample line and sample sink drains in the PSS are collected in the secondary liquid waste system where they are processed for reuse.

9.3.2.2.4 Manual Grab Sample Stations

Manual grab sample stations are provided for the liquid and gaseous sample points which require sampling at a frequency of less than once a week or on a nonscheduled basis. All gas sampling stations are of the inline type which returns purge

gases to the process lines. Quick-disconnect type couplings are used for sampling bottle connections to provide a convenient and expeditious way of sampling for the nuclear sampling system.

Grab sample points for primary and radwaste liquid and gases are identified in Table 9.3-6. No sample point is provided on the chemical mixing tank of the chemical and volume control system since chemical additives are preanalyzed before they are added to the mixing tank.

9.3.2.3 Safety Evaluation

Except for the associated containment penetrations, the plant sampling system is not a safety-related system.

SAFETY EVALUATION ONE - Sections 6.2.4 and 6.2.6 provide the safety evaluation for the system containment isolation arrangement and testability.

All plant sampling system lines penetrating the containment can be isolated at the containment boundary by solenoid valves that close either upon receipt of a containment isolation signal or by manual actuation. (See Section 6.2.4 for a discussion of containment isolation.)

9.3.2.4 Tests and Inspections

Proper operation of the PrSS, RWSS, and PSS is initially demonstrated during preoperational testing.

The proper operation and availability of the PrSS and RWSS are proved in service by their use during normal plant operation. Samples from the PrSS and RWSS are drawn manually for laboratory analysis. The results of this analysis are checked by calibrating the laboratory instruments against known compositions or check sources.

The PSS draws continuous samples from the turbine cycle systems for automatic or manual water quality analysis. The operation of the PSS is verified by observing that continuous sample flow is maintained through the analyzers. The calibration of the analyzers is checked periodically by comparing it with laboratory analysis of a grab sample from the same process. The output of the continuous analyzers is recorded, and abnormal values are alarmed.

9.3.2.5 Instrumentation Applications

The plant sampling systems use local pressure, temperature, and flow indicators to facilitate manual operation and to verify sample conditions before samples are drawn.

A radiation element continuously monitors the steam generator blowdown sample for primary-to-secondary tube leaks. In the event the steam generator blowdown samples exhibit high radioactivity, approaching the limits given in Section 11.5, the sample line isolation valves are automatically closed. Facilities for obtaining these samples are also provided at the nuclear sampling panel.

The PSS is equipped with continuous analyzers to monitor specific water quality conditions. Certain measurements, as indicated in Figure 9.3-4, are used to automatically control the chemical addition for pH and corrosion control. Indicators and manual controls are provided on the sampling panel to maintain the proper sample conditions of the water entering the analyzers. Grab sample points are also provided for laboratory analysis verification of analyzer calibration. Chilled water is provided to condition samples to the standard condition required by instrumentation.

9.3.3 FLOOR AND EQUIPMENT DRAINAGE SYSTEMS

The floor and equipment drainage system (FEDS) collects, monitors, and directs liquid waste generated within the plant to the proper area for processing or disposal.

9.3.3.1 Design Bases

9.3.3.1.1 Safety Design Bases

The following safety design bases are applicable to those portions of the FEDS which have safety-related functions of containment isolation, leak detection in safety-related pump rooms following a LOCA, isolation of auxiliary building drainage system discharge paths following a LOCA, leak detection in the diesel generator rooms, leak detection in the basement of the control building, and backflow prevention rooms housing redundant trains of safety-related equipment.

SAFETY DESIGN BASIS ONE - The FEDS is protected from the effects of all appropriate natural phenomena, such as earthquakes, tornadoes, hurricanes, floods, and external missiles (GDC-2).

SAFETY DESIGN BASIS TWO - The FEDS is designed to remain functional after a SSE or to perform its intended function following postulated hazards of fire, internal missile, or pipe break (GDC-3 and 4).

SAFETY DESIGN BASIS THREE - Component redundancy is provided so that safety functions can be performed, assuming a single active component failure coincident with the loss of offsite power (GDC-34).

SAFETY DESIGN BASIS FOUR - The FEDS is designed so that the active components are capable of being tested during plant operation. Provisions are made to allow for inservice inspection of components at appropriate times specified in the ASME Boiler and Pressure Vessel Code, Section XI.

SAFETY DESIGN BASIS FIVE - The FEDS uses design and fabrication codes consistent with the quality group classification assigned by Regulatory Guide 1.26 and the seismic category assigned by Regulatory Guide 1.29. The power supply and control functions are in accordance with Regulatory Guide 1.32.

SAFETY DESIGN BASIS SIX - The capability to isolate components or piping is provided so that the FEDS' safety function will not be compromised. This includes isolation of components to deal with leakage or malfunctions. Drainage from safety-related equipment rooms is designed to prevent flooding via drainage piping backflow.

SAFETY DESIGN BASIS SEVEN - Instrumentation is provided which permits the detection of leakage from safety-related systems following a LOCA.

SAFETY DESIGN BASIS EIGHT - The containment isolation valves in the system are selected, tested, and located in accordance with the requirements of 10 CFR 50, Appendix A, General Design Criterion 56, and 10 CFR 50, Appendix J, Type C testing.

SAFETY DESIGN BASIS NINE - Instrumentation is provided which permits the detection of water accumulation that could affect the operation of safety-related equipment.

9.3.3.1.2 Power Generation Design Bases

POWER GENERATION DESIGN BASIS ONE - All FEDS subsystems are designed to prevent the uncontrolled discharge of radioactive effluent from the power block.

POWER GENERATION DESIGN BASIS TWO - All nonradioactive sub-systems are designed to minimize the introduction of potentially radioactive contaminated materials.

POWER GENERATION DESIGN BASIS THREE - The design and arrangement of the sanitary drainage subsystem ensures that the introduction of potentially radioactive contaminated materials will not occur.

POWER GENERATION DESIGN BASIS FOUR - The FEDS is designed to adequately handle and process normal anticipated drainage without sump overflow. Radioactive and nonradioactive wastes are handled by separate subsystems.

POWER GENERATION DESIGN BASIS FIVE - The FEDS contains provisions for normal plant operation leakage detection.

The FEDS contains provisions for the detection of leakage from the reactor coolant system pressure boundary, containment cooler coil section, the spent fuel pool, transfer canal, cask loading pool, and refueling pool.

The FEDS serves to identify leakage that may occur in the event of a pipe rupture within the plant.

The collection piping within the FEDS is normally empty and is not a source of leakage. The discharge lines from the sump pump are normally full of water. Section 3.6 provides an evaluation which demonstrates that the pipe routing of the FEDS is physically separated from the essential systems to the maximum extent practical. Protection mechanisms, as required, are also discussed in Section 3.6.

9.3.3.2 System Description

9.3.3.2.1 General Description

The FEDS is shown in Figure 9.3-5. Major drainage areas are shown in Figure 9.3-6. The FEDS consists of several subsystems, as described below. Areas of the plant are served by the appropriate FEDS, based on the potential source of leakage into the subject area. This allows segregation of radioactive and nonradioactive sources. In addition, provisions are made in the appropriate subsystems for leak detection and isolation of portions of the subsystem to preclude degradation of safety-related functions.

Equipment and floor drainage for site structures (fuel oil pump house, administration building, shop building and circulating water screenhouse) are provided separate from the power block structures.

9.3.3.2.1.1 Radioactive Drainage Areas

Radioactive FED subsystems include:

a. Potentially radioactive low tritium level waste (DRW)

b. Tritiated waste (CRW)

c. Chemical waste (ARW)

d. Detergent waste (SRW)

e. Potentially radioactive secondary liquid waste (LRW)

These subsystems are directed to and processed or disposed of by appropriate systems, as indicated in Figure 11.1A-1.

The discharge of the liquid radioactive effluents from the power block is discussed in Section 11.2.2. A check valve is provided in the site portion of the discharge line in order to preclude backflow of water to the powerblock.

DRW SUBSYSTEM - The DRW subsystem consists of a network of floor and equipment drains arranged to collect potentially radioactive wastes with relatively low tritium levels from mechanical components, valve stem leakoffs, and maintenance drainage in the auxiliary, fuel, containment, radwaste, and control buildings. Each building is provided with a separate sump or group of sumps from which the collected waste is pumped to the floor drain tank for processing. The system also collects potentially radioactive tritiated waste from continuous equipment drains within the engineered safety features pump rooms and liquid collected by the leak detection subsubsystem of the DRW subsystem.

The leak detection subsubsystem consists of a network of leak chases, collection piping, and flow measuring standpipes for the refueling pool and fuel storage pool; standpipes for the containment coolers; level indicators for the containment normal sumps, RHR pump rooms sump, control building sumps, and the auxiliary building sump pit; and high level alarms for all sumps. The fuel storage pool standpipe measures combined leakage from the spent fuel pool, fuel transfer canal, and cask loading pool. In addition, all sump pump start and stop times are monitored and recorded by the plant computer.

The refueling pool and fuel storage pool leak detection systems utilize gravity flow leak collection chases positioned behind the liner plate welds. Vertical liner plate welds have structural steel channels seal welded behind the weld lines forming the collection chases. Horizontal liner plate welds have structural steel channels positioned under the weld lines. These horizontal channels are not seal welded at the top of the channel to the bottom of the pool liner. The leak chases are segregated into isolatable zones to facilitate leak location with only the vertical chases having leak tight capability. Refer to Figures 9.3-5 sheets 16 and 17 and 9.3-7 for the leak chase zone and standpipe configuration. Each standpipe is capable of detecting a 1-gallon per minute leak within 60 minutes after leak initiation.

A condensate measuring standpipe is provided for each of the four containment coolers. The standpipes are similar in design to the pool standpipes, except that they measure containment cooler condensate in lieu of pool leakage. The standpipes are designed to preclude condensate backup into the containment coolers in the event of high condensate flow rates. The standpipes are capable of measuring a 1.0 gpm flow rate within 60 minutes after leak initiation. The condensate flow rate during normal plant operation is used as the base rate when evaluating condensate flow rates to determine if abnormal flows are occurring. The containment cooler standpipes measure unidentifiable leakage rates, as defined in Section 5.2.5.

Sump level instruments in the containment, RHR pump rooms, auxiliary building, and instrument tunnel are used in conjunction with the plant computer to determine leak rates in the various buildings.

The safety-related level instrumentation in the sumps in the auxiliary building, RHR pump rooms, control building, and containment is located in a protected corner of the respective sump.

The RHR pump room instrumentation provides the earliest possible indication of a potential flooding condition in the safety-related pump rooms and, therefore, serves to protect the safety-related pumps. The auxiliary building sump instrumentation provides the earliest possible indication of a potential flooding condition in the auxiliary building at El. 1,974 corridors and areas open to the corridors and, therefore, serves to protect all equipment in the auxiliary building. The control building instrumentation provides early indication of a potential flood condition in the basement of the control building and, therefore, serves to protect the safety-related essential service water system components in that area. The containment instrumentation provides early indication of a potential flood condition in the containment and therefore serves to protect all safety-related equipment in the containment.

Each of the safety-related level indication units is designed to provide the control room with an analog indication of the water level within the instrument measurement range. Refer to Appendix 3B for the design basis flood level.

The containment sumps and incore instrumentation sump indicators serve to measure unidentifiable leakage, as defined in Section 5.2.5.

In addition to providing the plant operators with a safety-related, Class IE indication of water levels in the RHR pump room and the auxiliary building sump, the level indicators provide input to the plant computer.

High level alarms with control room annunciation are provided for all sumps. The alarm points are set above the highest normal sump pump actuation level. All sumps within the turbine building are provided with a common annunciator as are all the CRW and DRW sumps serving nonsafety-related systems. All other sumps are provided with unique and separate annunciators.

Safety-related components which are located in the lowest elevation of the auxiliary building are housed within watertight compartments. The drainage arrangement for that area is such that external drain or flood water is prevented from back flow into these areas, and flooding within rooms of one train of the safety-related components cannot communicate with the areas associated with the redundant train. Figure 9.3-6 shows the drainage arrangement associated with this area. Redundant check valves on the DRW subsystem discharge line from the control building are also provided to assure that there is no backflow.

The DRW subsystem is designed with a segregated collection system for each of the safety-related pump trains so that crossflooding between trains will not occur. One sump for each safety-related train is provided and located in the RHR pump room. Sump pump discharge lines for these sumps are routed above the minimum watertight level and are provided with check valves internal and external to each room to preclude the sump pump discharge of one room from backflowing into the redundant room. The CRW subsystem equipment drains for the safety-related rooms are routed to a common sump external to the equipment rooms watertight boundary. The CRW equipment drains are capped during normal plant operation to prevent equipment room flooding from an external source. The CRW equipment drain caps may be removed during controlled maintenance operations to facilitate equipment drainage.

In the event of a LOCA, it is necessary to assure that any leakage from the ECCS be retained within the auxiliary building since airborne releases can be controlled and filtered, as discussed in Section 6.5. Redundant safety-related sump pump discharge isolation valves are provided which isolate on any SIS signal and prevent the discharge of the auxiliary building and RHR pumproom DRW sump pumps from leaving the auxiliary building.

Seal failure and the resultant maximum seal leakage of 7.5 gpm from the ECCS and containment spray pumps is the only major

credible source of leakage outside the containment following a LOCA. This leak rate is based on gross seal failure, as discussed in Section 6.3.

Containment isolation provisions on the DRW subsystem line which penetrates the containment include a normally open motor-operated valve inside and a normally closed air-operated valve outside. Both valves automatically close upon receipt of a CIS-A signal. An additional nonsafety-related solenoid is provided for the air-operated valve which, when energized, will open the valve. This occurs upon receipt of an indication of a running containment sump pump, except when a CIS-A signal is present. A high water level in a sump activates the associated pump.

An oil/water separator is provided for the DRW subsystem drains of the hot machine shop and decontamination room. The separator segregates machine shop oil from collected effluent prior to discharge to the floor drain tank.

Sumps collecting liquids for processing through oil/water separators (hot machine shop and all LRW subsystem sump pumps) are furnished with low shear double diaphragm pumps to preclude oil emulsification prior to oil/water separation.

CRW SUBSYSTEM - The CRW subsystem collects liquid waste which may contain relatively high tritium levels from equipment and valves within the auxiliary, radwaste, and fuel buildings. Separate sumps are provided in each building for effluent collection. Equipment drains only are provided for this system. The subsystem sump pumps discharge all collected effluent to the waste hold-up tank for processing.

ARW SUBSYSTEM - The ARW subsystem collects waste from selected laboratory sample sinks, maintenance drains from evaporator reagent tanks, and washdown wastes from the hot machine shop decontamination room decontamination tank. Waste collected by the hot laboratory sample sinks flows by gravity to a collection sump and is pumped to the chemical drain tank for processing and solidification. Waste from the reagent tanks, a radwaste building sample station, and the decontamination tank flow directly by gravity to the chemical drain tank.

SRW SUBSYSTEM - The subsystem collects waste from laboratory dishwashers, deep sinks, and the laundry area. The collected waste flows by gravity to a stainless steel collection tank. Two pumps take suction from the tank and operate

alternatively or in parallel to pump the effluent to the laundry water storage tank for processing and recycle. A basket strainer is provided in each pump suction line to filter out lint and debris.

LRW SUBSYSTEM - The LRW subsystem collects normally nonradioactive but potentially radioactive turbine building drains and portions of the auxiliary building drains which do not normally house radioactive components. Two sumps are provided in the turbine building and one in the auxiliary building. The system normally discharges collected effluent to the secondary liquid waste processing system for recycle within the plant or discharge. The drainage can also be directed to the oil waste (OW) subsystem. Drain routing is an operator judgment based on prior knowledge of secondary system chemistry and radioactive contamination, in conjunction with ODCM limitations. The subsystem discharge can also be aligned to pump to the OW system when nonsecondary side liquid is collected, such as may be the case following a fire protection system sprinkler actuation. The LRW system also includes a condensate collection tank and pump designed to hold and transfer recyclable condensate back to the condenser.

The OW and LRW subsystems both serve the turbine building. Six-inch curbs are provided between the subsystem drainage areas to assure that proper segregation of equipment leakages is maintained. The sump pump discharge lines for the two subsystems have independent discharge line isolation valves and a valved crossconnection. These pneumatically operated valves can be remotely operated so that the LRW subsystem can be aligned to discharge to the OW subsystem header or the OW subsystem aligned to discharge to the LRW subsystem header.

Two 20-inch LRW drain lines are provided for the main steam/main feedwater isolation valve room in the auxiliary building to preclude flooding in the event of a postulated pipe break. The drain lines discharge into El. 2,000 of the turbine building.

9.3.3.2.1.2 Nonradioactive Drainage Areas

Nonradioactive FED subsystems include:

a. Sanitary waste (SAN)

b. Roof drains (RD)

c. Potentially oily waste (OW)

SAN SUBSYSTEM - The SAN subsystem collects sanitary waste from service facilities, pantry facilities, electric water coolers, clean showers, plumbing fixtures, and toilet floor drains within nonradioactive areas. The system is completely trapped and vented. The sanitary waste from all the buildings in the plant is collected in gastight and vented concrete sumps and pumped by a duplex arrangement of sump pumps to the sanitary sewer system to a lift station which sends the sanitary waste to a Non Discharging Sewage Lagoon located north east of the plant.

Equipment drains in the shop building are routed to the site water treatment system, which is located in the shop building (separate from the power block) and routed to a lime sludge pond (located north of the power block).

RD SUBSYSTEM - The roof drain subsystem collects water resulting from precipitation on building roofs. The roof drain subsystem is sized at a design rainfall rate, as shown in Chapter 2.0. The collected rainwater is conveyed by gravity to the site storm drainage system.

Building roof drainage for the power block area is routed to the storm drain system, which eventually drains into the cooling lake southwest of the plant site. Any potentially oily waste is directed to the oil separator located south of the plant building. The effluent from the oil separator joins the storm drain system and empties into the cooling lake.

OW SUBSYSTEM - The OW subsystem collects nonradioactive liquid waste from the turbine building, diesel generator building, communications corridor, control building, and selected areas of the auxiliary building. Equipment and floor drainage for site structures (fuel oil pump houses, administration building, shop building and circulating water screenhouse) are provided separate from the powerblock. Nonradioactive wastes are collected in sumps and pumped to an oil/water separator outside of the powerblock for processing and disposal. Radiation monitoring and automatic system isolation is provided in the discharge line to preclude the discharge of radioactive fluid from the powerblock. Potentially oily wastes are routed to the cooling lake after passing through the oil separator.

A portion of the OW system includes the Essential Service Water Vertical Loop Chase (ESWVLC) where a pump, discharge piping, and isolation valves are installed to remove water from the Chase. This portion of the OW system provides no safety-related function and does not adversely affect any design functions of safety-related SSCs. However, there is a potential that water collected in the Chase may contain traces of contamination from other sources outside the Chase. Additionally, the sump effluent may contain water from the ESW system. Dewatering wells have been installed around the plant for groundwater mitigation and tested in accordance with the Onsite Ground water protection Program Monitoring. The Dewatering Wells and ESW water are routinely sampled for contamination constituents. The pump can be operated automatically and manually and is located in the sump, which is designed to be a low point in the foundation for placement of the sump pump.

The diesel generator building sumps are provided with safety-related level instruments located in a protected corner of the respective sump. They provide the control room with analog level indication for earliest possible indication of a potential flooding condition in the diesel rooms and therefore serve to protect the diesels and associated switchgear.

The OW drainage system serving the control room is provided with a loop seal to facilitate control room pressurization. Means for checking and maintaining the loop seal level are provided. Trapped and vented drains are provided for powerblock battery rooms to assure that potentially noxious and corrosive vapors are retained within the battery rooms in the event of a gross battery failure. Acid neutralization tanks are also provided for the battery room drain headers to assure that the potentially corrosive effluents are neutralized with respect to pH prior to discharge from the powerblock.

The Containment Mini Purge Air Supply Unit provided with a loop seal that prevents the flow of air through the oily waste drain line le256xnd-4 during the negative pressure condition when auxiliary building supply fan (SGL01) is in operation.

9.3.3.2.2 Component Description

Codes and standards applicable to the FEDS are listed in Table 3.2-1. Except as discussed below, the design and construction of the FEDS is non-seismic Category I and quality group D. The containment penetration associated with the FEDS is designed and constructed to quality group B and seismic Category I requirements. Sump pump discharge isolation valves and level instrumentation for ECCS and containment spray pump areas which are required following LOCA are designed and constructed to quality group C and seismic Category I.

COLLECTION PIPING - In areas of potential radioactivity, the collection piping is stainless steel. Stainless steel is also provided for nonradioactive battery room drains in the control building and drains in the turbine building for the collection of secondary side leakages and drainage. In non-radioactive areas where the collected effluent is discharged from the powerblock (OW, SAN, and RD subsystems), all embedded piping is cast iron. Suspended piping is galvanized steel or cast iron. The fabrication and installation of piping provides for a minimum uniform slope of 1/8 inch per foot to induce waste to flow in the piping. The piping is embedded where necessary for radiation shielding. Equipment drainage piping is terminated not less than 3 inches above the finished floor.

EQUIPMENT DRAINS - Piped-up equipment drains are either routed directly to an embedded stub-up and seal welded in place or routed to an embedded stub-up and terminated in the open end. The connection to the stub-up varies as required for a particular application. In general, CRW subsystem drains carrying liquids with the potential for relatively high tritium levels are terminated with seal-welded connections while all others are terminated in the open end of drain hubs. Several equipment drains may terminate in one stub-up.

FLOOR DRAINS - All floor drains are installed with rims flush with the low point elevation of the finished floor.

Floor drains in areas of potential radioactivity are welded directly to the collection piping and are provided with threaded plugs of the same material. The plugs are used to seal the floor drains during hydrostatic testing of the drainage systems and during all required leak rate test procedures. They are also installed, as required, to preserve the integrity of the drainage systems. Floor drains in areas not restricted due to potential radioactivity are provided with caulked or threaded connections.

TRAPS - Inlets to the sanitary drainage system are provided with a water seal in the form of a vented P-trap to minimize entry of vermin and foul odors into the building. Air pressure vent lines to the outside atmosphere are provided downstream of the P-traps to prevent excessive backpressures which could cause blowout or siphonage of the water seal. A trapped header is provided to facilitate control room pressurization during control room isolation, as indicated in Section 6.4. Means for testing and filling the control room trap is provided. Trapped and vented drain lines are also provided for battery rooms in the control and turbine buildings.

Traps are not installed at inlets in oily, detergent, and chemical drainage subsystems or in areas of potential radioactivity to preclude the accumulation of radioactive liquids, oil, or detergents.

CLEANOUTS - The DRW, OW, LRW, and SRW subsystems are provided with cleanouts when practical at the base of each vertical riser and at intervals of not more than 50 feet. Floor and equipment drains without traps are considered to be cleanouts for design purposes. The CRW, ARW subsystems, and leak detection subsystems are not provided with cleanouts because the effluents collected have a very low percentage of suspended solids. The sanitary drainage subsystem and roof drain are provided with cleanouts.

COLLECTION SUMPS - Sumps collecting potentially radioactive liquid (except those inside the containment) are lined with stainless steel. The sumps are provided with a 1/2-inch-thick carbon steel cover used to support the sump controls and sump pumps. The sumps (except LRW sumps) are vented to a filtered building exhaust system. The sumps inside the containment are lined with carbon steel. Radwaste building sumps and the ARW sumps are designed to accept a 12-inch-thick concrete cover in addition to the steel cover for additional shielding.

Sumps collecting nonradioactive liquid consist of concrete pits covered with 1/2-inch carbon steel cover plates. Sumps collecting nonradioactive fluids are locally vented, except for the sanitary drainage sump which is vented outside the powerblock through an independent vent.

All sump capacities are equal to or greater than the amount pumped from it in 5 minutes with one pump running.

All sumps have removable covers and/or inspection openings to facilitate sump cleaning and pump and controls inspection.

COLLECTION TANKS - Horizontal stainless steel tanks are used to collect SRW subsystem wastes and DRW reactor coolant pump lubricating oil leakage. The SRW subsystem tank is located in the control building and vented to a filtered exhaust system whereas the DRW subsystem tank is located in the containment and vented locally. A horizontal carbon steel tank in the LRW subsystem is used in the turbine building to collect main steam condensate. This tank is vented to a turbine building exhaust system. All tanks are provided with overflow connections.

ACID NEUTRALIZATION TANKS - Each battery room floor drain network is provided with an acid neutralization tank designed to neutralize the amount of acid contained within approximately 25 percent of the battery cells in the event of a break in the batteries. The tanks are stainless steel and filled with limestone as the neutralization agent. Liquid flows by gravity through the tanks and into the OW subsystem. The tanks are vented outside for removal of $C0_2$ generated during the neutralization process.

PUMPS - Vertical centrifugal sump pumps or double diaphragm sump pumps are provided for all sumps. Sumps lined with stainless steel have duplex stainless steel pumps while pumps in the concrete sumps are cast iron. Double diaphragm pumps are used to pump water which is to be processed through an oil-water separator and subsequently recycled. Duplex arrangements of sump pumps are provided in every case, except for pumps in the tendon access

gallery, which are simplex. Submersible pumps are used in the incore instrumentation tunnel and the auxiliary building - radwaste building pipe tunnel. All sump pumps, except the sanitary lift station pumps, are provided with suction strainers designed to preclude the pumping of particles greater than 1/2-inch diameter. The sanitary lift station sump pumps are capable of pumping a spherical mass less than or equal to 2 1/2-inches in diameter. Pump discharge rates are equal to or greater than the maximum anticipated drainage rates to the sumps during normal plant and/or maintenance operations.

9.3.3.2.3 System Operation

All of the FEDS subsystems utilize gravity drainage for the collection of the various effluents. All subsystems except the OW, roof drain, and leak detection subsystems utilize duplex arrangements of pumps at the collection point. The OW subsystem utilizes single pumps for the tendon access gallery and miscellaneous condensate drain tank and duplex pumps for all other applications. The roof drain and leak detection subsystems do not require pumps. The pumps (lead pump in a duplex configuration) are automatically activated when a predetermined high water level in the sump or tank is reached. Two pumps are actuated (duplex assemblies) when the water level rises to a predetermined high-high level. One pump will stop automatically when the liquid level falls below the high level set point. The lag pump will continue to operate until the water level is pumped down to a predetermined low level. The alternator automatically changes the actuation sequence for the lead and lag pump. High level alarms with computer annunciation are provided for all sumps and tanks.

The pneumatically operated containment isolation valve is normally closed and opens only in the event of a containment sump pump start in the absence of a containment isolation signal. The motor-operated containment isolation valve is normally open and closes in the event of a containment isolation signal.

The auxiliary building isolation valves are motor operated and normally open and close only in the event of a safety injection signal.

The leak detection system in the containment determines leak rates by calculating fill rates in sumps and standpipes. Standpipes utilize base-mounted pressure transmitters, to monitor standpipe water levels. The plant computer utilizes the pressure information and calculates incoming flow rates based on level changes resulting from the filling standpipes. The standpipes for the containment cooler, the refueling pool, and the fuel storage pool automatically drain following a stand-pipe high level and

reset for continued operation. The level transmitters for the containment sumps provide an analog level signal to the plant computer. The plant computer is programmed to periodically calculate incoming flow rate and produce an alarm message if the flow rate increases by a predetermined amount.

9.3.3.3 Safety Evaluation

Safety evaluations are numbered to correspond to the safety design bases of Section 9.3.3.1.1.

SAFETY EVALUATION ONE - The safety-related portions of the FEDS are located in the reactor and auxiliary buildings. These buildings are designed to withstand the effects of earthquakes, tornadoes, hurricanes, floods, external missiles, and other appropriate natural phenomena. Sections 3.3, 3.4, 3.5, 3.7(B), and 3.8 provide the bases for the adequacy of the structural design of these buildings.

SAFETY EVALUATION TWO - The safety-related portions of the FEDS are designed to remain functional after a safe shutdown earthquake. Sections 3.7(B).2 and 3.9(B) provide the design loading conditions that were considered. Sections 3.5 and 3.6 provide the hazards analyses to assure that a safe shutdown, as outlined in Section 7.4, can be achieved and maintained.

SAFETY EVALUATION THREE - The safety-related portions of the FEDS are completely redundant and, as indicated by Table 9.3-7, no single failure will compromise the system's safety functions. All vital power can be supplied from either onsite or offsite power systems, as described in Chapter 8.0.

SAFETY EVALUATION FOUR - The safety-related portions of the FEDS were initially tested with the program given in Chapter 14.0. Periodic inservice functional testing is done in accordance with Section 9.3.3.4. Section 6.6 provides the ASME Boiler and Pressure Vessel Code, Section XI requirements that are appropriate.

SAFETY EVALUATION FIVE - Section 3.2 delineates the quality group classification and seismic category applicable to the safety-related portion of this system and supporting systems. Figure 9.3-5 shows that the components meet the design and fabrication codes given in Section 3.2. All the power supplies and controls necessary for safety-related functions of the FEDS are Class IE, as described in Chapters 7.0 and 8.0.

SAFETY EVALUATION SIX - Section 9.3.3.2 describes the isolation provisions incorporated in the drainage system to ensure that any leakage that could occur following a LOCA is retained within an area which is served by a safety-related filtration exhaust system.

Section 9.3.3.2 also describes the segregated drainage system for each watertight safety-related component area and the barriers which prevent backflow.

SAFETY EVALUATION SEVEN - Safety-related level indicators are provided in each of the watertight areas which house the ECCS and containment spray pumps. Seal leakage from these pumps is the only major credible source of leakage following a LOCA. Redundant level indication is provided in the auxiliary building sump located in the sump pit of the basement of the auxiliary building to detect any long-term accumulation of fluid leaking from safety-related systems operating after a LOCA. Level instrumentation is discussed in Section 9.3.3.5. The drain configuration is indicated in Figure 9.3-6.

SAFETY EVALUATION EIGHT - Sections 6.2.4 and 6.2.6 provide the safety evaluation for the system containment isolation arrangement and testability.

SAFETY EVALUATION NINE - Safety-related level indicators are provided in the basement of the control building and in each diesel generator room to provide indication of a potential flooding condition in those areas. Refer to Section 9.5.1 for a description of flood damage protection during fire fighting operations.

9.3.3.4 Tests and Inspections

Preoperational testing is described in Chapter 14.0.

The performance and structural and leaktight integrity of system components is demonstrated by continuous operation.

The FEDS is testable through the full operational sequence that provides isolation following a LOCA, including operation of applicable portions of the protection system and transfer between normal and standby power.

The safety-related components are located to permit preservice and inservice inspections.

9.3.3.5 Instrumentation Application

The FEDS instrumentation is designed to facilitate automatic operation and remote control of the system and to provide continuous indication of system parameters.

Safety-related float-type level indicators are provided in the RHR pump room sumps, the auxiliary building sump, the control building sump, the diesel generators building sumps, and the containment normal sumps. In the event of a LOCA, these level devices monitor the performance of the safety-related systems by detecting leakage significant enough to result in detectable accumulation. The RHR pump room sump and auxiliary building sump level devices can detect the accumulated leakage resulting from a leak as small as 5 gpm within 30 minutes of the leak initiation. The level devices in the sumps will indicate the water level up to 6 feet from the bottom of the sump for the control building sump (high level alarm at 2 feet 2 inches); up to 6 feet 6 inches above the top of the sump for the RHR pump rooms (high level alarm at 2 feet 10 inches from the bottom of the sump); between 3 feet 6 inches from the bottom of the sump to 6 feet from the bottom of the diesel generator building sumps (high level alarm at 1 foot 9 inches); and up to 7 feet 6 inches from the bottom of the sump for the containment normal sumps (high level alarm at 3 feet 3 inches from the bottom of the sump).

Each FEDS normal sump operating level line which can discharge outside the standard power block is provided with a radiation monitor which will isolate the discharge path upon a high level indication. Section 11.5 discusses the process radiation monitors.

High level alarms with control room annunciation are provided for all sumps and tanks. All sumps within the turbine building are provided with a common annunciator as are all floor and equipment subsystem sumps serving nonsafety-related equipment. The sanitary drainage subsystem sump, chemical drain subsystem sump, detergent drain subsystem tank, sump serving the auxiliary feedwater pumps, sumps within the diesel generator building, sump serving the auxiliary boiler room, sumps within the containment, and sumps inside of the safety features equipment rooms are provided with unique and separate annunciators. Each high level alarm is set to annunciate at a level above that required to actuate both pumps of a duplex sump pump arrangement or one pump of a simplex sump arrangement.

Hand switches with indicator lights are provided in the control room for sumps inside the containment and the sump pumps within the safety features pump rooms to permit remote sump pump actuation. All other pumps are provided with local hand switches.

Instrumentation is provided for the oily waste discharge line to measure and indicate the radiation level of the pumped effluent. Digital readout is provided in the control room.

Instrumentation is provided for the fuel storage pool and refueling pool to measure pool leak rates and each containment cooler to measure condensate flow rates. Standpipes with automatic drain controls are used and can detect a one gallon per minute leak within 60 minutes of leak initiation. A periodic update of the leak rate is provided by the plant computer. Also, instrumentation is provided for the instrument tunnel sump and the containment normal sumps, which provide data to the plant computer for leak rate calculations.

The detergent waste system basket strainers are provided with instrumentation to determine strainer pressure drop. A high pressure drop condition is alarmed in the control room.

Controls and instrumentation are provided for pneumatic and motor-actuated valves to permit remote operation and provide indication of valve position. This includes containment isolation valves, fuel storage pool standpipe valves (leak detection subsystem), refueling pool standpipe valves (leak detection subsystem), oily waste discharge isolation valves, containment cooler standpipe valves (leak detection subsystem), auxiliary building sump discharge isolation valves, and the secondary liquid waste to oily waste system isolation valves.

9.3.4 CHEMICAL AND VOLUME CONTROL SYSTEM

The chemical and volume control system (CVCS) performs the following functions:

a. The CVCS maintains the required water inventory in the reactor coolant system (RCS) during normal operation, power changes, startup, and shutdown, including pressurizer auxiliary spray for depressurization. The CVCS also provides reactor grade water to the reactor coolant pump seals for cooling and sealing purposes.

b. The CVCS varies the RCS soluble neutron absorber (boron) concentration to compensate for core burn-up. The CVCS provides sufficient boron, in the form of boric acid, to maintain the required shutdown margin during refueling.

c. The CVCS and boron thermal regeneration subsystem (BTRS) vary the RCS boron concentration to compensate for xenon transients and other reactivity changes which occur when the reactor power changes during load following, shutdowns, and startups.

d. The CVCS functions to maintain the desired RCS water chemistry conditions and reduce the radioactivity level.

e. Portions of the CVCS (i.e., charging pump subsystem) provide an injection flow to the RCS upon receiving a safety injection signal.

f. The CVCS provides normal makeup to the RWST and fuel storage pool.

g. For safety grade cold shutdown, part of the CVCS functions in conjunction with other systems of the cold shutdown design.

The boron recycle system is discussed in Section 9.3.6.

9.3.4.1 Design Bases

9.3.4.1.1 Safety Design Basis

Portions of the CVCS associated with emergency boration (via BAT or RWST), charging for ECCS, reactor coolant pressure boundary isolation and containment isolation are safety related. These portions are required to function following a DBA and to achieve and maintain the plant in a safe shutdown condition.

SAFETY DESIGN BASIS ONE - The CVCS is protected from the effects of natural phenomena, such as earthquakes, tornadoes, hurricanes, floods, and external missiles (GDC-2).

SAFETY DESIGN BASIS TWO - The pressure boundary of the CVCS is designed to remain intact after an SSE, some of the system components are designed to remain functional after an SSE, and the system is designed to perform its intended function following postulated hazards, internal missiles, or pipe breaks (GDC-3 and 4).

SAFETY DESIGN BASIS THREE - Safety functions can be performed, assuming a single active component failure coincident with the loss of offsite power (GDC-26 and 35).

SAFETY DESIGN BASIS FOUR - The active components are capable of being tested during plant operation. Provisions are made to allow for inservice inspection of components at appropriate times specified in the ASME Boiler and Pressure Vessel Code, Section XI (GDC-32, 36, and 37).

SAFETY DESIGN BASIS FIVE - The CVCS is designed and fabricated to codes consistent with the quality group classification assigned by Regulatory Guide 1.26 and the seismic category assigned by Regulatory Guide 1.29. The power supply and control functions are in accordance with Regulatory Guide 1.32.

SAFETY DESIGN BASIS SIX - The capability to isolate components or piping is provided so that the CVCS's safety function will not be compromised. This includes the isolation of components to deal with leakage or malfunctions and to isolate nonsafety-related portions of the system.

SAFETY DESIGN BASIS SEVEN - The containment isolation valves in the system are selected, tested, and located in accordance with the requirements of GDC-55 and 10 CFR 50, Appendix J, Type C Testing.

SAFETY DESIGN BASIS EIGHT - The CVCS provides diverse means of borating the RCS to a concentration that exceeds the requirement for a safe shutdown of the reactor from any operating condition, assuming that the control rod cluster with the highest reactivity worth is stuck in its fully withdrawn position and in the unlikely event that safe shutdown is initiated from peak xenon conditions. This amount of boric acid also exceeds the amount required to bring the reactor to a hot shutdown condition and to compensate for the subsequent reactivity transient resulting from xenon decay (GDC-27 and 29).

SAFETY DESIGN BASIS NINE - The CVCS has sufficient makeup capacity to maintain the required RCS water inventory in the event of a reactor coolant system leak resulting from an equivalent pipe break opening of 3/8-inch (liquid service), 3/4-inch (steam service), diameter or less (GDC-33).

SAFETY DESIGN BASIS TEN - The centrifugal charging pump subsystem of the CVCS in conjunction with other systems, provides a borated injection flow to the RCS upon receipt of a safety injection signal. The charging pump subsystem of the CVCS is an integral part of the ECCS.

SAFETY DESIGN BASIS ELEVEN - Should only safety-related equipment be available, the centrifugal charging pump subsystem of the CVCS functions in conjunction with other systems of the cold shutdown design to borate the RCS to a cold shutdown concentration.

9.3.4.1.2 Power Generation Design Basis

POWER GENERATION DESIGN BASIS ONE - The CVCS regulates the concentration of chemical neutron absorber (boron) in the reactor coolant to control reactivity changes resulting from the change in reactor coolant temperature between cold shutdown and hot full-power operation, burnup of fuel and burnable poisons, buildup of fission products in the fuel, and xenon transients. The CVCS is capable of borating the RCS through either one of two flow paths and from either one of two boric acid sources.

POWER GENERATION DESIGN BASIS TWO - The CVCS is capable of controlling the changes in the reactor coolant boron concentration to compensate for the xenon transients during load-follow operations, without adding makeup for either boration or dilution. This is accomplished by the boron thermal regeneration process, which is designed to allow load-follow operations as required by the design load cycle.

POWER GENERATION DESIGN BASIS THREE - The CVCS maintains the coolant inventory in the RCS within the allowable pressurizer level range for all normal modes of operation, including startup from cold shutdown, full power operation, and plant cooldown. This system also has sufficient makeup capacity to maintain the minimum required inventory in the event of minor RCS leaks.

POWER GENERATION DESIGN BASIS FOUR - The CVCS is capable of removing fission and activation products, in ionic form, gaseous form, or as particulates, from the reactor coolant in order to provide access to those process lines carrying reactor coolant during operation and to reduce activity releases due to leaks.

POWER GENERATION DESIGN BASIS FIVE - The CVCS provides a means for adding chemicals to the RCS to control the pH of the coolant during initial startup and subsequent operation, scavenge oxygen from the coolant during startup, and counteract the production of oxygen in the reactor coolant due to radiolysis of water in the core region. Oxygen control is also provided by maintaining dissolved hydrogen in the reactor coolant to scavenge oxygen.

The CVCS is capable of maintaining the oxygen content and pH of the reactor coolant within the limits specified in Table 5.2-5.

POWER GENERATION DESIGN BASIS SIX - The CVCS is able to continuously supply filtered water to each reactor coolant pump seal, as required by the reactor coolant pump design and as specified in Table 9.3-8.

POWER GENERATION DESIGN BASIS SEVEN - (deleted)

POWER GENERATION DESIGN BASIS EIGHT - The letdown and excess letdown lines between the points where they connect to the reactor coolant system and the points where they penetrate the secondary shield wall contain sufficient volume to delay the flow for 60 seconds during maximum letdown to allow the N-16 activity to decay.

POWER GENERATION DESIGN BASIS NINE - The purification and BTRS portions of the CVCS use design and fabrication codes consistent with quality group D (augmented), as assigned by Regulatory Guide 1.143 for radioactive waste management systems. The codes and standards to which individual components of the CVCS are designed are listed in Section 3.2.

9.3.4.2 System Description

9.3.4.2.1 General Description

The CVCS is shown in Figure 9.3-8, with system design parameters listed in Table 9.3-8. The CVCS consists of several subsystems: the charging, letdown, and seal water system; the reactor coolant purification and chemistry control system; the reactor makeup control system; and the boron thermal regeneration system. CVCS operation during accident mitigation is discussed in Section 6.3.

During refuel 6, non-safety related temperature monitoring instrumentation has been temporarily installed on the CVCS Auxiliary Spray piping to the pressurizer. The instrumentation is strapped around the piping in three locations. Two of the locations fall on portion of this piping in the Reactor Coolant System (RCS). The instrumentation consists of two RTDs at each of thethree locations (Total 6 RTDs) and associated cabling to a data logger. The RTDs provide input to an existing data logger located in the containment, which ultimately feeds the data via an existing datalink to a Personal Computer located in the I&C Hot Shop.

Section 3.6 provides an evaluation demonstrating that pipe routing of the CVCS is physically separated from essential systems to the maximum extent practicable. Protection mechanisms that are required are also discussed in Section 3.6.

9.3.4.2.1.1 Charging, Letdown, and Seal Water System

The charging and letdown functions of the CVCS are employed to maintain a programmed water level in the RCS pressurizer, thus maintaining a proper reactor coolant inventory during all phases of plant operation. This is achieved by means of a continuous

feed-and-bleed process during which the feed rate is automatically controlled, based on the pressurizer water level. The bleed rate can be chosen to suit various plant operational requirements by selecting the proper combination of letdown orifices in the letdown flow path.

Reactor coolant is let down to the CVCS from a reactor coolant loop cross-over leg. It then flows through the shell side of the regenerative heat exchanger where its temperature is reduced by heat transfer to the charging flow passing through the tubes. The coolant then experiences a large pressure reduction as it passes through the letdown orifice(s) and flows through the tube side of the letdown heat exchanger where its temperature is further reduced. Downstream of the letdown heat exchanger, a second pressure reduction occurs. This second pressure reduction is performed by the low pressure letdown valve, which maintains upstream pressure and thus prevents flashing downstream of the letdown orifices.

The coolant then flows through one of the mixed bed demineralizers. The flow may then pass through the cation bed demineralizer, which is used intermittently when additional purification of the reactor coolant is required.

From a point upstream of the BTRS or from a point upstream of the reactor coolant filters, a small sample flow may be diverted from the letdown stream to the boron concentration measurement system (see Section 7.7). The read-out on the boron concentration is given in the main control room. The boron concentration measurement system has been abandoned-in-place.

During reactor coolant boration and dilution operations, especially during load follow, the letdown flow leaving the demineralizers may be directed to the BTRS. The coolant then flows through the reactor coolant filter and into the volume control tank (VCT) through a spray nozzle in the top of the tank. Hydrogen is continuously supplied to the VCT where it mixes with fission gasses which are stripped from the reactor coolant into the tank gas space. The contaminated hydrogen is vented to the gaseous waste processing system. The partial pressure of the hydrogen gas mixture in the VCT determines the concentration of hydrogen dissolved in the reactor coolant for control of the oxygen produced by radiolysis of the water in the core.

Three charging pumps (one “normal” pump and two standby pumps) are provided to take suction from the volume control tank and return the purified reactor coolant to the RCS. Normal charging flow is handled by the normal charging pump. This charging flow splits into two paths. The bulk of the charging flow is pumped back to the RCS cold leg through the tube side of the regenerative heat exchanger. The letdown flow in the shell side of the regenerative heat exchanger raises the charging flow to a temperature approaching the reactor coolant temperature. Two charging paths are provided from a point downstream of the regenerative heat exchanger. A flow path is also provided from the regenerative heat exchanger outlet to the

pressurizer spray line. An air-operated valve in the spray line is employed to provide auxiliary spray to the vapor space of the pressurizer during plant cooldown. This provides a means of cooling and mixing the pressurizer contents near the end of plant cooldown, when the reactor coolant pumps, which normally provide the driving head for the pressurizer spray, are not operating. Should only safety grade equipment be available, depressurization could be performed by the cold shutdown design, also described in Section 7.4.

A portion of the charging flow is directed to the reactor coolant pumps (RCP) (nominally 8 gpm per pump) through a seal water injection filter. The flow is directed to a point above the pump shaft bearing. Here the flow splits, and a portion (nominally 5 gpm per pump) enters the RCS through the labyrinth seals and thermal barrier. The remainder of the flow is directed upward along the pump shaft to the number 1 seal leakoff. The number 1 seal leakoff flow from the four RCPs discharges to a common manifold, exits from the containment, and then passes through the seal water return filter and the seal water heat exchanger to the suction side of the charging pumps, or by alternate path to the volume control tank. Measurement of the leakage from the RCP seals when the RCS pressure is 2235 ± 20 psig is performed every 31 days. When RCP number 1 seal leakoff is found to be greater than 8 gpm per RCP, action is taken in accordance with the off normal procedure for RCP malfunction. A very small portion of the seal flow leaks through to the number 2 seal. A stand-pipe provides a head for the number 3 seal which provides a final barrier to leakage of reactor coolant to the containment atmosphere. The number 2 seal leakoff flow is discharged to the reactor coolant drain tank in the liquid waste processing system. The number 3 seal overflow is discharged to the containment sump (this leakoff flow consists of a portion of the reactor makeup water which is supplied by the RCP seal standpipe). As discussed in Section 5.4.1.2.2, the RCP shaft seal system is designed for continued operation with either seal water injection or component cooling water to the RCP thermal barrier.

The excess letdown path is provided as an alternate letdown path from the RCS in the event that the normal letdown path is inoperable or provides insufficient capacity. Reactor coolant can be discharged from a crossover leg to flow through the tube side of the excess letdown heat exchanger where it is cooled by component cooling water. Under emergency shutdown conditions, the letdown flow can be diverted downstream of the excess letdown heat exchanger to the pressurizer relief tank. Under normal conditions, downstream of the heat exchanger, a remote-manual control valve is used to control the letdown flow. The flow normally joins the RCP number 1 seal discharge manifold and passes through the seal water return filter and heat exchanger to the suction side of the charging pumps. The excess letdown flow can also be directed to the VCT or the reactor coolant drain tank. When the normal letdown

line is not available, the purification path is also not in operation. Therefore, this alternate condition would allow continued power operation for a limited period of time, dependent on RCS chemistry and activity. The excess letdown flow path is also used to provide additional letdown capability during the final stages of plant heatup. This path removes some of the excess reactor coolant due to coolant expansion as a result of the RCS temperature increase. Should RCS inventory letdown be required, a safety grade letdown path via the excess letdown heat exchanger to the pressurizer relief tank (PRT) is provided. This assures the capability to provide an RCS inventory letdown path should normal letdown paths become unavailable. This path may be used in conjunction with other features of the safety grade cold shutdown system which is discussed in Section 7.4.

A normally open cross-tie line is provided between the normal letdown and charging systems. The purpose of the cross-tie is to provide makeup water from charging to letdown to collapse any steam bubble(s) formed in the letdown system due to letdown system cooldown, post-isolation. The cross-tie includes a mechanical pressure gauge, installed outside the primary shield wall, to enable Operations to ensure that the pressure across letdown system isolation valves BG LCV459/460 is equalized before the valves are reopened.

Surges in the RCS inventory due to load changes are accommodated for the most part in the pressurizer. The volume control tank provides additional surge capacity for reactor coolant expansion not accommodated by the pressurizer. If the water level in the volume control tank exceeds the normal operating range of 30 - 60%, a proportional controller modulates a three-way valve downstream of the reactor coolant filter to divert a portion of the letdown to the boron recycle system. If the high level limit in the volume control tank is reached, an alarm is actuated in the control room and the letdown flow is completely diverted to the boron recycle system, which is described in Section 9.3.6.

Low level in the volume control tank initiates makeup from the reactor makeup control system. If the reactor makeup control system does not supply sufficient makeup to keep the volume control tank level from falling to a lower level, a low alarm is actuated. Manual action may correct the situation or, if the level continues to decrease, a low-low level signal from both level channels causes the suction of the charging pumps to be transferred from the volume control tank to the refueling water storage tank and closes the volume control tank outlet isolation valves.

9.3.4.2.1.2 Reactor Coolant Purification and Chemistry Control System

Reactor coolant water chemistry specifications are given in Table 5.2-5.

pH CONTROL - The pH control chemical employed is lithium hydroxide. This chemical is compatible with the materials and water chemistry of borated water/stainless steel/zirconium/inconel systems. In addition, lithium-7 is produced in the core region due to the irradiation of the dissolved boron in the coolant.

The concentration of lithium-7 in the RCS is maintained in the range specified for pH control (see Table 5.2-5). If the concentration exceeds this range the cation bed demineralizer is employed in the letdown line in series operation with a mixed bed demineralizer. Since the amount of lithium to be removed is small and its buildup can be readily calculated, the flow through the cation bed demineralizer is not required to be full letdown flow. The cation demineralizer is in use approximately 10 percent of the time. If the concentration of lithium-7 is below the specified limits, lithium hydroxide can be introduced into the RCS via the charging flow. The solution is prepared in the laboratory and poured into the chemical mixing tank. Reactor makeup water is then used to flush the solution to the suction manifold of the charging pumps.

OXYGEN CONTROL - During reactor startup from the cold condition, hydrazine is employed as an oxygen scavenging agent. The hydrazine solution is introduced in accordance with plant operating procedures. Hydrazine is not employed at any time other than startup from the cold shutdown state.

Dissolved hydrogen is employed to control and scavenge oxygen produced due to radiolysis of water in the core region. A sufficient partial pressure of hydrogen is maintained in the VCT so that the specified concentration of hydrogen is maintained in the reactor coolant. A pressure control valve maintains a minimum pressure in the vapor space of the volume control tank. This valve can be adjusted to provide the correct equilibrium hydrogen concentration (25 to 50 cc hydrogen at STP per kilogram of water). Hydrogen is supplied from the hydrogen manifold in the service gas system.

Mixed bed demineralizers are provided in the letdown line to provide cleanup for the letdown flow. The demineralizers remove ionic corrosion products and certain fission products. One demineralizer is in continuous service and can be supplemented intermittently by the cation bed demineralizer, if necessary, for additional purification. The cation resin removes principally cesium and lithium isotopes from the purification flow. The second mixed bed demineralizer serves as a standby unit for use if the operating demineralizer becomes exhausted during operation.

A further cleanup feature is available for use during cold shutdown and operation of the residual heat removal system (RHRS). A remote-operated valve admits a bypass flow from the RHRS into the letdown line upstream of the letdown heat exchanger. The flow passes through the heat exchanger, a mixed bed demineralizer, and the reactor coolant filter to the VCT. The fluid is then returned to the RCS via the normal charging route.

Filters are provided at various locations to ensure filtration of particulate and resin fines and to protect the seals on the reactor coolant pumps.

Fission gases are removed from the reactor coolant by purging of the VCT to the gaseous waste processing system.

9.3.4.2.1.3 Reactor Makeup Control System

The soluble neutron absorber (boric acid) concentration is controlled by the BTRS and by the reactor makeup control system which controls the makeup water concentration at a pre-set value between 0 and 4.0 weight percent nominal boric acid solution. The reactor makeup control system is also used to maintain proper reactor coolant inventory. In addition, for emergency boration and makeup, the redundant capability exists to supply borated water, at 1.4 weight percent nominal boric acid, directly from the refueling water storage tank to the suction of the charging pumps. When this source is used for boration, letdown from the RCS is required. Emergency boration utilizing only safety grade equipment is discussed in Section 7.4.

The reactor makeup control system provides a manually pre-selected makeup concentration of boric acid to the charging pump suction header or to the volume control tank. The makeup control functions are those of maintaining desired operating level in the VCT and adjusting reactor coolant boron concentration for reactivity control. Reactor makeup water and boric acid solution (4 weight percent nominal) are blended together to achieve the desired boron concentration for use as makeup to maintain volume control tank level or to change the reactor coolant boron concentration.

A boron concentration measurement system (see Section 7.7) is provided to monitor the boron content of the reactor coolant in the letdown line. The boron concentration is indicated in the main control room. The boron concentration measurement system has been abandoned-in-place.

Nominal four weight percent boric acid is stored in two boric acid tanks. Two boric acid transfer pumps are provided which are capable of supplying boric acid, at nominal 4 weight percent, directly to the charging pumps' suction header upon remote manual demand from the main control room. The boric acid transfer pumps are normally aligned to recirculate the boric acid tank contents via the minimum flow lines and will supply boric acid to the boric acid blending tee upon demand of the reactor makeup control system. This boric acid is blended with reactor makeup water and delivered to the VCT inlet or outlet for injection into the reactor coolant system. The boric acid transfer pumps are Class IE devices which are normally supplied by the Class IE power source, but have non-Class IE controls and are shed from the busses upon accident initiation. They can be manually loaded on the standby diesel generator as needed, if offsite power is lost.

All portions of the CVCS which normally contain concentrated boric acid solution (nominally 4.0 to 4.5 weight percent boric acid), except for the normal and emergency boration lines in RM 1113, are located within a heated area in order to maintain the solution temperature at ≥ 65 F, as discussed in Section 9.4. Heat trace is installed on the normal and emergency boration lines in Room 1113 since the temperature in the room can drop below 65F, which is the solubility limit for boric acid at 7700 ppm.

The reactor makeup water pumps, taking suction from the reactor makeup water storage tank, are employed for various makeup and flushing operations throughout the systems. One of these pumps starts on demand from the reactor makeup controller and provides flow to the boric acid blending tee or chemical mixing tank.

During reactor operation, changes are made in the reactor coolant boron concentration for the following conditions:

a. Reactor startup - Boron concentration must be decreased from shutdown concentration to achieve criticality.

b. Load follow - Boron concentration must be either increased or decreased to compensate for the xenon transient following a change in load.

c. Fuel burnup - Boron concentration must be decreased to compensate for fuel burnup and the buildup of fission products in the fuel.

d. Cold shutdown - Boron concentration must be increased to the cold shutdown concentrations.

(When in modes 3, 4 and 5, LCV112A is in the full VCT position unless boron concentration or CVCS inventory changes are required.)

The BTRS is normally used to control boron concentration to compensate for xenon transients. Boron thermal regeneration can also be used in conjunction with dilution operations of the reactor makeup control system to reduce the amount of effluent to be processed by the boron recycle system.

The reactor makeup control system (RMCS) can be set up for the following modes of operation:

a. Automatic Makeup

The "automatic makeup" mode of operation of the reactor makeup control system provides blended boric acid solution to the RCS at the desired concentration. Automatic makeup compensates for minor leakage of reactor coolant without causing significant changes in the reactor coolant boron concentration.

Under normal plant operating conditions, the mode selector switch is set in the "automatic makeup" position. This switch position establishes a pre-set control signal to the total makeup flow controller and establishes positions for the makeup stop valves for automatic makeup. The boric acid flow controller is set to blend to the desired concentration of boric acid. A preset low level signal from the VCT level controller causes the automatic makeup control action to start a reactor makeup water pump, start a boric acid transfer pump, open the makeup stop valve to the charging pump suction, and position the boric acid flow control valve and the reactor makeup water flow control valve. The flow controllers then blend the makeup stream according to the preset concentration. Makeup addition to the charging pump suction header causes the water level in the VCT to rise. At a preset high level point, the makeup is stopped. This operation may be terminated manually at any time.

If the automatic makeup fails or is not aligned for operation and the VCT level continues to decrease, a low level alarm is actuated. Manual action may correct the situation or, if the level continues to decrease, a low-low level signal opens the isolation valves in the refueling water supply line to the charging pumps and closes the isolation valves in the VCT outlet line.

b. Dilution

The "dilute" mode of operation permits the addition of a preselected quantity of reactor makeup water at a preselected flow rate to the RCS. The operator sets the mode selector switch to "dilute," the total makeup flow controller setpoint to the desired flow rate, and the total makeup batch integrator to the desired quantity and initiates system start. This opens the reactor makeup water flow control valve, opens the makeup isolation valve to the VCT inlet, and starts a reactor makeup water pump. Excessive rise of the VCT water level is prevented by automatic actuation (by the tank level controller) of a three-way diversion valve which routes the reactor coolant letdown flow to the boron recycle system. When the preset quantity of water has been added, the batch integrator causes the makeup to stop. The operation may be terminated to stop and the operation may be terminated manually at any time.

Dilution can also be accomplished by operating the BTRS in the boron storage mode, as described in Section 9.3.4.2.1.4.

c. Alternate Dilution

The "alternate dilute" mode of operation is similar to the dilute mode, except that a portion of the dilution water flows directly to the charging pump suction and a portion flows into the VCT via the spray nozzle and then flows to the charging pump suction. This decreases the delay in diluting the RCS caused by directing dilution water to the VCT inlet.

d. Boration

The "borate" mode of operation permits the addition of a preselected quantity of concentrated boric acid solution at a preselected flow rate to the RCS. The operator sets the mode selection switch to "borate," the concentrated boric acid flow controller setpoint to the desired flow rate, and the concentrated boric acid batch integrator to the desired quantity and initiates system start. This opens the makeup isolation valve to the charging pumps suction, positions the boric acid flow control valve, and starts the selected boric acid transfer pump, which delivers a nominal 4 weight percent

boric acid solution to the charging pumps suction header. The total quantity added in most cases is so small that it has only a minor effect on the VCT level. When the preset quantity of concentrated boric acid solution is added, the batch integrator causes the makeup to stop. Also, the operation may be terminated manually at any time.

Boration can also be accomplished by operating BTRS in the boron release mode, as described in Section 9.3.4.2.1.4.

e. Manual

The "manual" mode of operation permits the addition of a preselected quantity and blend of the boric acid solution to the refueling water storage tank, to the recycle holdup tanks in the boron recycle system, to the boron thermal regeneration system, and to the fuel storage pool, or to some other location via a temporary connection. While in the manual mode of operation, automatic makeup to the RCS is precluded. The discharge flow path must be prepared by opening the manual valves in the desired path.

The operator sets the mode selector switch to "manual," the boric acid and total makeup flow controllers to the desired flow rates, and the boric acid and total makeup batch integrators to the desired quantities and actuates the makeup start switch.

Reactor makeup water can be used to de-borate the boron thermal regeneration demineralizers using the manual switch settings.

The start switch actuates the boric acid flow control valve and the reactor makeup water flow control valve and starts the reactor makeup water pump and boric acid transfer pump.

When the preset quantities of boric acid and reactor makeup water have been added, the batch integrators cause the makeup to stop. This operation may be stopped manually by actuating the makeup stop switch.

If either batch integrator is satisfied before the other has recorded its required total, the pump and valve associated with the integrator which has been satisfied will terminate the flow. The flow controlled by the other integrator will continue until that integrator is satisfied. In the manual mode, the boric acid flow is terminated first to prevent the piping systems from remaining filled with nominal 4 weight percent boric acid solution.

The quantities of boric acid and reactor makeup water injected are totalized by the batch counters, and the flow rates are recorded on strip recorders. Deviation alarms sound for both boric acid and reactor makeup water if the flow rates deviate from the setpoints.

9.3.4.2.1.4 Boron Thermal Regeneration System

Downstream of the mixed bed demineralizers, the letdown flow can be diverted to the BTRS when boron concentration changes are desired. After processing by the BTRS, the flow is returned to the letdown flow path at a point upstream of the reactor coolant filter.

The boron concentration measurement system (see Section 7.7) is used to monitor the boron concentration in the letdown stream before it is diverted to the BTRS for processing or to monitor the adjusted boron concentration of the letdown stream after it has been treated by the thermal regeneration process. The boron concentration measurement system has been abandoned-in-place.

Storage and release of boron is determined by the temperature of the fluid entering the thermal regeneration demineralizers. A chiller unit and a group of heat exchangers are employed to provide the desired fluid temperatures at the demineralizer inlets for either storage or release operation of the system. The flow path through the boron thermal regeneration system is different for the dilution and the boration operations.

During dilution, the letdown stream enters the moderating heat exchanger, and from there it passes through the letdown chiller heat exchanger. These two heat exchangers cool the letdown stream prior to its entering the demineralizers. The letdown reheat heat exchanger is valved out on the tube side and performs no function during boron storage operations. The temperature of the letdown stream at the point of entry to the demineralizers is controlled automatically by the temperature control valve which controls the shell side flow to the letdown chiller heat exchanger. After passing through the demineralizers, the letdown enters the moderating heat exchanger shell side where it is heated by the incoming letdown stream before returning to letdown line.

For dilution, a decrease in the boric acid concentration in the reactor coolant is accomplished by sending the letdown flow at relatively low temperatures to the thermal regeneration demineralizers. The resin, which was depleted of boron at high temperature during a prior boron release operation, is now capable of

storing boron from the low temperature letdown stream. Reactor coolant with a decreased concentration of boric acid leaves the demineralizers and is returned to the letdown line.

During the boration operation, the letdown stream enters the moderating heat exchanger tube side, bypasses the letdown chiller heat exchanger, and passes through the shell side of the letdown reheat heat exchanger. The moderating and letdown reheat heat exchangers heat the letdown stream prior to its entering the resin beds. The temperature of the letdown at the point of entry to the demineralizers is controlled automatically by the temperature control valve which controls the flow rate on the tube side of the letdown reheat heat exchanger. After passing through the demineralizers, the letdown stream enters the shell side of the moderating heat exchanger, passes through the tube side of the letdown chiller heat exchanger, and then goes to the VCT via the reactor coolant filter and letdown line. The temperature of the letdown stream entering the VCT is controlled automatically by adjusting the shell side flow rate on the letdown chiller heat exchanger. Thus, for boration, an increase in the boric acid concentration in the reactor coolant is accomplished by sending the letdown flow at relatively high temperatures to the thermal regeneration demineralizers. The water flowing through the demineralizers now results in boron being released which was stored by the resin at low temperature during a previous boron storage operation. The boron enriched reactor coolant is returned to the RCS via the charging system portion of the CVCS.

Although the boron thermal regeneration system is primarily designed to compensate for xenon transients occurring during load follow, it can also be used to handle boron changes during other modes of plant operation. During startup dilution, for example, the resin beds are first saturated, then washed off. This operation continues until the desired dilution in the RCS is obtained. This method of startup serves to reduce the effluents diverted to the boron recycle system.

As an additional function, a thermal regeneration demineralizer can be used as a deborating demineralizer, which can be used to dilute the RCS down to very low boron concentrations toward the end of a core cycle. To make such a bed effective, the effluent concentration from the bed must be kept very low, close to zero ppm boron. This low effluent concentration can be achieved by using fresh resin. Use of fresh resin can be coupled with the normal replacement cycle of the resin, one resin bed being replaced during each core cycle.

9.3.4.2.2 Component Description

Codes and standards applicable to the CVCS are listed in Tables 3.2-1 and 9.3-9. The CVCS is designed and constructed in accordance with the following quality group requirements:

Reactor coolant system boundary valves and piping are quality group A; the letdown, charging, and seal water system and associated containment penetrations are quality group B; the boric acid transfer system is quality group C; and the coolant purification and BTRS are quality group D (augmented) in accordance with Regulatory Guide 1.143 for radioactive waste management systems. The quality group A, B, and C portions are seismic Category I. The entire CVCS is located within seismic Category I structures.

CHARGING PUMPS - Three charging pumps are supplied to inject coolant into the RCS. The pumps are of the single speed, horizontal, centrifugal type. The 100-percent redundant centrifugal charging pumps are powered from separate Class IE sources, while the normal charging pump is powered from a non-Class IE source. In the USAR, the safety related pumps are always referred to as centrifugal charging pumps and non-safety related pumps are referred to as normal charging pumps. Where the term charging pump is used, it implies any of three pumps. All parts in contact with the reactor coolant are fabricated of austenitic stainless steel or other corrosion-resistant material. To prevent leakage to the atmosphere, the charging pump seals are provided with leakoffs to collect the leakage. There are minimum flow recirculation lines to protect the charging pumps from a closed discharge valve condition.

The charging flow rate is determined from a pressurizer level signal. Charging flow control is accomplished by a modulating valve on the discharge side of the charging pumps. The standby centrifugal charging pumps also serve as high-head safety injection pumps in the emergency core cooling system. A description of the centrifugal charging pump function upon receipt of a safety injection signal is given in Section 6.3.2.2.

BORIC ACID TRANSFER PUMPS - Two 100-percent redundant canned motor pumps are supplied per unit. The pumps are Class IE devices powered through a qualified isolation device from Class IE sources with non-Class IE controls and are shed on a safety injection

signal. In the event of loss-of-offsite power, the pumps can be manually loaded on separate Class IE (diesel backed) sources. A complete description of this capability is provided in Chapters 7.0 and 8.0. The boric acid transfer pumps are normally aligned to supply boric acid to the suction header of the charging pumps. Manual or automatic initiation of the reactor coolant makeup system will start one pump to provide normal makeup of boric acid solution to the suction header of the charging pumps. Mini-flow from this pump flows back to the associated boric acid tank and helps maintain thermal equilibrium. The standby pump can be used intermittently to circulate the boric acid solution through the other tank to maintain thermal equilibrium in this part of the system. The transfer pumps also function to transfer boric acid solution from the batching tank to the boric acid tanks.

Emergency boration, in which nominal 4 weight percent boric acid solution is supplied directly to the suction of the charging pumps, can be accomplished by manually starting either or both pumps. This is the preferred emergency boration mode if all components are available, rather than using the refueling water storage tank. The pumps are located in a heated area to prevent crystalization of the boric acid solution. All parts in contact with the solution are of austenitic stainless steel. An alternate discussion on boration is provided in Section 7.4 in conjunction with a discussion of the features of safety related cold shutdown designs.

CHILLER PUMPS - Two centrifugal pumps circulate the water through the chilled water loop in the BTRS. One pump is normally operated, with the second serving as a standby.

REGENERATIVE HEAT EXCHANGER - The regenerative heat exchanger is designed to recover heat from the letdown flow by reheating the charging flow, which reduces the thermal effects on the charging connections to the reactor coolant loop piping.

The letdown stream flows through the shell of the regenerative heat exchanger while the charging stream flows through the tubes. The unit is constructed of austenitic stainless steel, and is of all-welded construction.

The temperatures of both outlet streams from the heat exchanger are monitored with indication given in the control room. A high temperature alarm is actuated on the main control board if the temperature of the letdown stream exceeds the desired limits.

LETDOWN HEAT EXCHANGER - The letdown heat exchanger cools the letdown stream to the operating temperature of the mixed bed demineralizers. Reactor coolant flows through the tube side of

the exchanger while component cooling water flows through the shell side. All surfaces in contact with the reactor coolant are austenitic stainless steel, and the shell is carbon steel.

The low pressure letdown valve, located downstream of the heat exchanger, maintains the pressure upstream of the heat exchanger in a range sufficiently high to prevent flashing downstream of the letdown flow orifices. Pressure indication and high pressure alarm are provided on the main control board.

The letdown temperature control indicates and controls the temperature of the letdown flow exiting from the letdown heat exchanger. The exit temperature of the letdown stream is controlled by regulating the component cooling water flow through the letdown heat exchanger. Temperature indication is provided on the main control board. If the outlet temperature from the heat exchanger is excessive, a high temperature alarm is actuated, and a temperature controlled three-way valve diverts the letdown directly to the reactor coolant filter bypassing the CVCS demineralizers.

The outlet temperature from the shell side of the heat exchanger is allowed to vary over an acceptable range compatible with the equipment design parameters and required performance of the heat exchanger in reducing letdown stream temperature.

EXCESS LETDOWN HEAT EXCHANGER - The excess letdown heat exchanger cools reactor coolant excess letdown flow. The flow rate is equivalent to the portion of the nominal seal injection flow which flows into the RCS through the reactor coolant pump labyrinth seals.

The excess letdown heat exchanger can be employed either when normal letdown is temporarily out of service to maintain the reactor in operation, to supplement maximum letdown during the final stages of heatup, or to provide a letdown path from the RCS to the pressurizer relief tank. The letdown flows through the tube side of the unit, and component cooling water is circulated through the shell. All surfaces in contact with reactor coolant are austenitic stainless steel, and the shell is carbon steel. All tube joints are welded.

A temperature detector measures the temperature of the excess letdown flow downstream of the excess letdown heat exchanger. Temperature indication and high temperature alarm are provided on the main control board.

A pressure sensor indicates the pressure of the excess letdown flow downstream of the excess letdown heat exchanger and excess letdown control valve. Pressure indication is provided on the main control board.

Redundant temperature detectors measure the temperature of the letdown flow from the excess letdown heat exchanger to the pressurizer relief tank.

Redundant flow detectors measure the flow rate of the letdown flow from the excess letdown heat exchanger to the pressurizer relief tank.

SEAL WATER HEAT EXCHANGER - The seal water heat exchanger is designed to cool fluid from three sources: reactor coolant pump number 1 seal leakage, reactor coolant discharged from the excess letdown heat exchanger, and miniflow from the charging pumps. Reactor coolant flows through the tube side of the heat exchanger, and component cooling water is circulated through the shell. The design flow rate through the tube side is equal to the sum of the nominal excess letdown flow, maximum design reactor coolant pump seal leakage, and miniflow from one charging pump. The unit is designed to cool the above flow to the temperature normally maintained in the VCT. All surfaces in contact with reactor coolant are austenitic stainless steel, and the shell is carbon steel.

MODERATING HEAT EXCHANGER - The moderating heat exchanger operates as a regenerative heat exchanger between incoming and outgoing streams to and from the boron thermal regeneration demineralizers.

The incoming letdown flow enters the tube side of the moderating heat exchanger. The shell side fluid, which comes directly from the thermal regeneration demineralizers, enters at low temperature during boron storage and high temperature during boron release.

LETDOWN CHILLER HEAT EXCHANGER - During the boron storage operation, the process stream enters the tube side of the letdown chiller heat exchanger after leaving the tube side of the moderating heat exchanger. The letdown chiller heat exchanger cools the process stream to allow the thermal regeneration demineralizers to remove boron from the coolant. The desired cooling capacity is adjusted by controlling the chilled water flow rate passed through the shell side of the heat exchanger.

The letdown chiller heat exchanger is also used during the boron release operation to further cool the liquid leaving the moderating heat exchanger shell side to ensure that its temperature does not exceed that of normal letdown to the VCT.

LETDOWN REHEAT HEAT EXCHANGER - The letdown reheat heat exchanger is used only during boration operations to heat the process stream. Water used for heating is diverted from the letdown line upstream of the letdown heat exchanger, passed through the tube side of the letdown reheat heat exchanger, and then returned to the letdown stream upstream of the letdown heat exchanger.

VOLUME CONTROL TANK - The VCT provides surge capacity for part of the reactor coolant expansion volume not accommodated by the pressurizer. When the level in the tank reaches the high level setpoint, the remainder of the expansion volume is accommodated by diversion of the letdown stream, upstream of the VCT, to the boron recycle system. To prevent large hydrogen pressure swings in the VCT, and undesirable hydrogen concentrations in the RCS, it is desirable to maintain the level at the upper limit of the normal range. For optimal hydrogen pressure control, the level should be maintained between 50 and 60% whenever possible. The tank also provides a means for introducing hydrogen to the coolant to maintain the required equilibrium concentration of 25 to 50 cc hydrogen (at STP) per kilogram of water and is used for degassing the reactor coolant. It also serves as a head tank for the charging pumps.

A spray nozzle located inside the tank on the letdown line provides liquid-to-gas contact between the incoming fluid and the hydrogen atmosphere in the tank.

Hydrogen (from the service gas system) is supplied to the VCT. If it is desired to remove gaseous fission products, which are stripped from the reactor coolant and collected in this tank, a remotely operated vent valve, discharging to the gaseous waste processing system, can be placed in service. Relief protection, gas space sampling, and nitrogen purge connections are also provided. The tank can also accept the seal water return flow from the reactor coolant pumps, although this flow normally goes directly to the suction of the charging pumps.

VCT pressure is monitored with indication given in the control room. An alarm is actuated in the control room for high and low pressure conditions. The VCT pressure control valve is automatically closed by the low pressure signal.

Three level channels govern the water inventory in the VCT. Redundant level indicators are provided on the main control board from two protection-grade level channels. Local level indication is provided from a control-grade level channel. Level indication from all three channels is also provided through the distributed control system. A high-low level alarm on the main control board is actuated by a validated signal from the three level channels.

If the VCT level rises above the normal operating range of 30 - 60%, the validated level signal provides a signal to a controller which modulates the three-way valve downstream of the reactor coolant filter to maintain the VCT level within the normal operating band. The three-way valve can split letdown flow so that a portion goes to the boron recycle system and a portion to the VCT. The controller would operate in this fashion during a dilution operation when reactor makeup water is being fed to the VCT from the reactor makeup control system.

If this modulating function fails and the VCT level continues to rise, the high-level alarm will alert the operator to the malfunction, and the full letdown flow is diverted to the recycle hold-up tank.

During normal power operation, a low level in the VCT initiates automatic makeup which injects a preselected blend of boric acid solution and reactor makeup water into the charging pump suction header. When the volume control tank level is restored to normal, automatic makeup stops.

If the automatic makeup fails or is not aligned for operation and the tank level continues to decrease, a low-level alarm is actuated. Manual action may correct the situation, or if the level continues to decrease, a low-low signal from either of the two protection-grade level channels opens its associated stop valve in the RWST supply line and closes its associated stop valve in the VCT outlet line. For additional discussion of the VCT level controls, refer to Section 7.6.11.

BORIC ACID TANKS - The combined BAT capacity is sized to store sufficient boric acid solution for refueling plus enough for a cold shutdown from full-power operation immediately following refueling with the most reactive control rod not inserted.

The concentration of boric acid solution in storage is maintained between 4 and 4.5 percent nominal by weight. Periodic manual sampling and corrective action, if necessary, assure that these limits are maintained. Therefore, measured amounts of boric acid solution can be delivered to the reactor coolant to control the prevailing boron concentration.

A temperature sensor provides the temperature measurement of the contents of each tank. Temperature indication, as well as high and low temperature alarms, are provided on the main control board.

Two level detectors indicate the level in each boric acid tank. Level indication with high, low, low-low, and empty level alarms is provided on the main control board. The high alarm indicates that the BAT may soon overflow. The low alarm warns the operator

to start makeup to the BAT. The low-low alarm is set to indicate the minimum level of boric acid in the BAT to ensure that sufficient boric acid is available for a cold shutdown with one stuck rod. The empty level alarm is set to give warning of loss of pump suction.

BATCHING TANK - The batching tank is used for mixing a makeup supply of boric acid solution for transfer to the boric acid tanks.

A local sampling point is provided for verifying the solution concentration prior to transferring it out of the tank. The tank is provided with an agitator to improve mixing during batching operations and a steam jacket for heating the boric acid solution.

CHEMICAL MIXING TANK - The primary use of the chemical mixing tank is in the preparation of caustic solutions for pH control, hydrazine solution for oxygen scavenging, and chemicals for corrosion products oxidation during a refueling shutdown.

CHILLER SURGE TANK - The chiller surge tank handles the thermal expansion and contraction of the water in the chiller loop. The surge volume in the tank also acts as a thermal buffer for the chiller. The fluid level in the tank is monitored with level indication, and high and low level alarms are provided on the main control board.

MIXED BED DEMINERALIZERS - Two flushable mixed bed demineralizers assist in maintaining reactor coolant purity. A lithium form cation resin and hydroxyl form anion resin are charged into the demineralizers for normal operation while a hydrogen form cation resin and hydroxyl form anion resin can be used during refueling outage cleanup. The anion resin is converted to the borate form in operation. Both types of resin remove fission and corrosion products. The resin bed is designed to reduce the concentration of ionic isotopes in the purification stream, except for cesium, yttrium, and molybdenum, by a minimum factor of 10.

Each demineralizer has more than sufficient capacity for one core cycle with 1 percent of the rated core thermal power being generated by defective fuel rods. One demineralizer is normally in service with the other in standby.

A temperature sensor monitors the temperature of the letdown flow downstream of the letdown heat exchanger. If the letdown temperature exceeds the maximum allowable resin operating temperature (approximately 140 F), a three-way valve is automatically actuated so that the flow bypasses the demineralizers. Temperature indication and high alarm are provided on the main control board. The air-operated, three-way valve failure mode directs flow to the VCT via the reactor coolant filter.

CATION BED DEMINERALIZER - A flushable cation resin bed in the hydrogen form is located downstream of the mixed-bed demineralizers and is used intermittently to control the concentration of Li-7 (pH control) in the reactor coolant system. Its size is based upon the estimated production of Li-7 in the reactor core region due to the $B^{10} \rightarrow (n\alpha) \rightarrow Li^{7}$ reaction during base load operation. The demineralizer also has sufficient capacity to maintain the cesium-137 concentration in the coolant below 1.0μCi/cc with 1 percent defective fuel. The resin bed is designed to reduce the concentration of ionic isotopes, particularly cesium, yttrium, and molybdenum, by a minimum factor of 10.

The demineralizer has more than sufficient capacity for one core cycle with 1 percent of the rated core thermal power being generated by defective fuel rods.

THERMAL REGENERATION DEMINERALIZERS - The function of the thermal regeneration demineralizers is to store the total amount of boron that must be removed from the RCS to accomplish the required dilution during a load cycle in order to compensate for xenon buildup resulting from a decreased power level. Furthermore, the demineralizers must be able to release the previously stored boron to accomplish the required boration of the reactor coolant during the load cycle in order to compensate for a decrease in xenon concentration resulting from an increased power level.

The thermally reversible ion storage capacity of the resin applies only to borate ions. The capacity of the resin to store other ions is not thermally reversible. Thus, during boration, when borate ions are released by the resin, there is no corresponding release of the ionic fission and corrosion products stored on the resin.

The thermal regeneration demineralizer resin capacity is directly proportional to the solution boron concentration and inversely proportional to the temperature. Further, the differences in capacity as a function of both boron concentration and temperature are reversible. For the 50°F to 140°F temperature cycle, this reversible capacity varies from the beginning of a core cycle to the end of core life by a factor of about 2.

The demineralizers are of the type that can accept flow in either direction. The flow direction during boration is therefore always opposite to that during release. This provides faster response when the beds are switched from storage to release and vice versa than would be the case if the demineralizers could accept flow in only one direction.

Temperature instrumentation is provided upstream of the thermal regeneration demineralizers to control the temperature of the process flow. During dilution operations, it controls the flow through the shell side of the letdown chiller heat exchanger to maintain the process flow at 50 F as it enters the demineralizers. During boration operations, it controls the flow through the tube side of the letdown reheat heat exchanger to maintain the process flow at 140 F as it enters the demineralizers. Temperature indication and a high temperature alarm are provided on the main control board.

An additional temperature instrument is provided to protect the demineralizer resins from a high temperature condition. On reaching the high temperature set point, an alarm is sounded on the main control board, and the letdown flow is diverted to the VCT from a point upstream of the mixed bed demineralizers.

Failure of the temperature controls resulting in hot water flow to the demineralizers would result in a release of boron stored on the resin with a resulting increase in reactor coolant boron concentration and increased margin for shutdown. If the temperature of the resin rises significantly above 140 F, the number of ion storage sites on the resin will gradually decrease, thus reducing the capability of the resin to remove boron from the process stream. Degradation of ion-removal capability will occur for temperatures of approximately 160 F and above. The extent of the degradation and rate at which it will occur depend upon the temperature experienced by the resin and the length of time that the resin experiences this elevated temperature.

Failure of the temperature control system resulting in cold water flow to the demineralizers would result in storage of boron on the resin and reduction of the reactor coolant boron concentration. The amount of reduction in the reactor coolant boron concentration is limited by the capacity of the resin to remove boron from the water. As the boron concentration is reduced, the control rods would be driven into the core to maintain the power level. If the rods were to reach the shutdown limit set point, an alarm would be actuated informing the operator that emergency boration of the RCS is necessary in order to maintain the capability of shutting the reactor down with control rods alone.

REACTOR COOLANT FILTER - The reactor coolant filter is located in the letdown line upstream of the VCT. The filter collects resin fines and particulates from the letdown stream. The nominal flow capacity of the filter is greater than the maximum letdown flow rate. A differential pressure indicator is provided to show the differential pressure drop across the reactor coolant filter.

SEAL WATER INJECTION FILTERS - Two seal water injection filters are located in parallel in a common line to the reactor coolant pump seals; they collect particulate matter that could be harmful to the seal faces. Each filter is sized to accept flow in excess of the normal seal water flow requirements.

A differential pressure indicator monitors the pressure drop across each seal water injection filter and gives local indication with high differential pressure alarm on the main control board.

Redundant safety related flow monitoring is provided downstream of seal water injection filters.

SEAL WATER RETURN FILTER - This filter collects particulates from the reactor coolant pump seal water return and from the excess letdown flow. The filter is designed to pass the sum of the excess letdown flow and the maximum design leakage from all reactor coolant pumps.

A differential pressure indicator is provided to show the differential pressure across the seal water return filter.

BORIC ACID FILTER - The boric acid filter collects particulates from the boric acid solution being pumped from the boric acid tanks by the boric acid transfer pumps. The filter is designed to pass the design flow of two boric acid transfer pumps operating simultaneously.

A differential pressure indicator is provided to show the differential pressure across the boric acid filter.

LETDOWN ORIFICES - Three letdown orifices are provided to reduce the letdown pressure from reactor conditions and to control the flow of reactor coolant leaving the RCS. The orifices are placed into or out of service by remote operation of their respective isolation valves. Two of the orifices are designed for a normal letdown flow of 75 gpm, and the third orifice is designed for 45 gpm. During normal power operation 45 gpm orifice may be used to attain the desired letdown flowrate. Any combination of the three orifices may be used for flow control at low RCS pressures, such as plant startup, when maximum letdown is desirable. Each orifice consists of an assembly which provides for permanent pressure loss without recovery, and is made of austenitic stainless steel or other adequate corrosion resistant material.

A flow monitor provides indication in the control room of the letdown flow rate and an alarm to indicate unusually high flow.

A low pressure letdown controller located downstream of the letdown heat exchanger controls the pressure upstream of the letdown heat exchanger to prevent flashing of the letdown liquid. Pressure indication and high pressure alarm are provided on the main control board.

CHILLER - The chiller is located in a chilled water loop containing a surge tank, chiller pumps, the letdown chiller heat exchanger, piping, valves, and controls.

The purpose of the chiller is twofold:

a. To cool down the process stream during storage of boron on the resin.

b. To maintain an outlet temperature from the BTRS at or below 115 F during release of the boron.

VALVES - Where functional requirements permit, elastomere diaphragm-type valves or packless globe valves are used to essentially eliminate leakage to the atmosphere. All packed valves which are larger than 2 inches and which are designated for radioactive services are provided with graphite packing.

All control (modulating) and three-way valves are either provided with stuffing box and leakoff connections or are totally enclosed. Leakage to the atmosphere is essentially zero for these valves. Basic material of construction is stainless steel for all valves which handle radioactive liquid or boric acid solutions.

All active, power-operated valves which are required to realign the CVCS for emergency core cooling, to isolate the containment, or are utilized as part of the safety-related cold shutdown design are energized from Class IE sources.

Normal letdown, purification, reactor makeup control, and BTRS power-operated valves, which are not required for emergency core cooling or containment isolation, fail to the safe position and are powered from non-Class IE sources. However, in the event of a loss of offsite power, selected valves in the boric acid transfer system can be manually loaded on a Class IE (diesel-backed) bus.

Relief valves are provided for lines and components that might be pressurized above design pressure by improper operation or component malfunction.

PIPING - All CVCS piping that handles radioactive liquid is austenitic stainless steel.

9.3.4.2.3 System Operation

Operation of the CVCS is described for the various phases of reactor plant operation presented below.

9.3.4.2.3.1 Plant Startup

Plant startup is defined as the operations which bring the reactor plant from the cold shutdown condition to normal, no-load operating temperature and pressure, and subsequently to full-power operation.

During cold shutdown, the CVCS is employed periodically to provide cleanup of a portion of the refueling water being cooled by the residual heat removal system (RHRS).

The charging and RHR pumps may be used to initially fill and pressurize the RCS (RCS temperature must be above 70 F). During filling, makeup water is drawn from the reactor makeup water storage tank and blended, using the reactor makeup control system, with boric acid, to provide makeup water at the administratively controlled RCS boron concentration. The RWST and RHUT are also available as borated water sources. A vacuum may be applied to the RCS to enhance the filling process via the reactor vessel head and the pressurizer. The reactor coolant system is vented via the reactor vessel head. The pressurizer and RCS are vented, as a minimum to the containment purge system, containment atmosphere, or pressurizer relief tank. Following the filling operations, the RCS is cold and water solid at low pressure. Special precautions are exercised to assure that an overpressurization transient does not occur. Overpressure protection is discussed in Section 5.2.2.

The charging pumps are employed to increase the RCS pressure while letdown continues through the RHRS to the CVCS. (Note that throttling the RHRS or stopping of the RHR pump can result in a RCS pressure increase of 100-150 psi.) The operator assures that the reactor vessel's allowable pressure/temperature relationship is not exceeded. The RCS pressure and letdown flowrate is monitored as the flow control valve is manually opened. The manual throttle valves in each of the RCP seal water supply lines are set to provide a flow of 8 to 13 gpm per RCP. Seal water is supplied to the idle reactor coolant pumps by throttling BGHCV182. When the reactor coolant temperature exceeds 150 F, seal water and component cooling water are supplied to the RCPs.

The reactor coolant pressure is initially maintained by the letdown pressure control valve PCV-131. All three letdown orifices are normally in use. The initial low pressure in the RCS will result in insufficient flow through the orifices, with the requirement that a bypass loop must be established. This is accomplished by diverting a portion of the RHRS flow to either the letdown heat exchanger (downstream of the orifices) normally by fully opening either EJ-V001, or EJ-V002, and throttling HCV-128. A nitrogen cover gas of 15 psig minimum should be maintained in the VCT.

The rate of increase of system pressure is controlled by a manual operation of the letdown pressure control valve PCV-131, the charging flow control valve FCV-121, and the RHR cleanup flow control valve HCV-128. Gradually, the letdown pressure control valve is closed to increase the RCS pressure to approximately 400 psig. If desired, the letdown pressure control valve may be reset in AUTO to maintain a pressure of about 350 psig in the RCS. Pressurization is then controlled by the charging system.

When the reactor coolant system pressure has reached an indicated pressure of 325-425 psig, and the Δ P across the RCP's No. 1 seals are satisfactory, the RCPs may be started.

The reactor coolant system heats up due to the reactor coolant pump heat input, pressurizer heaters, and residual heat addition; hence, excess coolant resulting from fluid expansion will accumulate in the VCT. The VCT level rises and the nitrogen cover gas is expelled to the gaseous radwaste system.

As soon as high level is reached in the VCT, the nitrogen supply is secured, and the hydrogen makeup valve is brought into operation. During this operation, the VCT pressure is maintained at 15 to 50 psig by the pressure control valve PCV-115 in the gaseous vent line. The VCT is allowed to decrease to normal volume by manually diverting the letdown to the recycle holdup tanks. This operation establishes the hydrogen over-pressure in the volume control tank.

Chemical treatment such as hydrazine addition is accomplished as required, prior to the RCS reaching 250 F. The mixed bed demineralizers are bypassed during chemical treatment to avoid driving lithium off the bed and replacing it with the ammonia which is formed during startup as a result of the hydrazine/oxygen reaction.

After oxygen scavenging is complete, the pressurizer spray valves are closed to allow the pressurizer to heat up independent of the main reactor coolant loops.

When the pressurizer is raised to the saturation temperature corresponding to the RCS pressure, a steam bubble is formed in the pressurizer. The RHR loop is isolated. The low-pressure letdown control valve is now set to AUTO to maintain a pressure of approximately 300-350 psig downstream of the letdown orifices. The charging flow control valve (if centrifugal pump is used) is controlled manually to obtain normal water level (no-load) in the pressurizer.

The normal charging pump flow control valve BGFCV462 can be placed in AUTO following attainment of normal water level in the pressurizer. As heatup proceeds, it is necessary to provide extra letdown flow capability in order to maintain maximum heatup rate. The amount of letdown flow attainable is limited by the regenerative heat exchanger (a maximum of 380 F is allowed at the outlet from the heat exchanger upstream of the letdown orifices), and the rate of expansion of the coolant due to heatup as reflected by the pressurizer level. The excess letdown heat exchanger may be employed as the reactor coolant temperature approaches no load T-avg to allow continued maximum RCS heatup rate.

Following chemical analysis to confirm that water quality, boron concentration, and hydrogen concentration are within specification, criticality is achieved by appropriate rod withdrawal; prior reduction of boron concentration by dilution will be required. The RMCS dilution mode, alternate dilution mode may be used. Exception to this is initial startup following refueling, during low power physics testing, where criticality is achieved through boron dilution.

The dilution mode of operation permits the addition of a preselected quantity of reactor makeup water at a preselected flow rate to the reactor coolant system.

Although the BTRS is primarily designed to compensate for xenon transients occurring during load follow, it can also be used to reduce the RCS concentration during a startup. During RCS dilution, for example, the letdown flow passes through the resin beds until they become saturated. The beds can then be washed off by reactor makeup water into the recycle holdup tanks. This operation continues until the desired dilution in the RCS is obtained. As compared with a feed-and-bleed operation, the use of the BTRS demineralizers for dilution during startup reduce the amount of liquid diverted to the recycle holdup tanks.

Further adjustments in boron concentration by operation of the RMCS to establish preferred control-group rod positions and to compensate for xenon buildup are also necessary.

Following attainment of full RCS pressure and temperature, the letdown orifices are set for normal letdown, and the excess letdown flow may be terminated.

During the heatup phase it should not be necessary to adjust the seal water injection valves; however, some adjustment of the charging line flow control valve may be required to maintain the required seal injection flow rate.

9.3.4.2.3.2 Normal Operation

Normal operation includes operation at steady power (base load) level, load follow operation, and hot standby.

BASE LOAD - At a constant power level, the rates of charging and letdown are dictated by the requirements for seal water to the reactor coolant pumps and the normal purification of the reactor coolant system. One charging pump is employed, and the flow is controlled automatically from pressurizer level. The only adjustments in boron concentration are those necessary to compensate for core burnup.

These adjustments are made to maintain the maneuvering band of the rod control groups within their allowable limit. Rapid variations in power demand will be accommodated automatically by control rod movement. If variations in power level occur, and the new power level is sustained for long periods, some adjustment in boron concentration may be necessary to ensure the preservation of the shutdown margin.

During normal operation, the letdown flow is 75 or 120 gpm, and one mixed bed demineralizer is in service. Reactor coolant samples are taken at frequent intervals to check boron concentration, water quality, pH, and activity level. The normal charging-pump flow control valve (FCV-462) is modulated by the pressurizer water level at the set point programmed for a prevailing reactor coolant average temperature. During normal operation with maximum purification, the letdown flow is 120 gpm. If a standby centrifugal charging pump is employed, the charging flow control valve (FCV-121) is modulated by pressurizer water level.

Operation of the BTRS is automatic. A master switch is provided which puts the BTRS in the right mode of operation for release or storage of boron on the resin beds. This switch performs the following functions for storage (RCS dilution):

a. Aligns the proper flow path for dilution.

Valves open	Valves closed	Valves modulating
HV-7054	HV-8245	TCV-386
UV-7002A	UV-7040	
UV-7002B	UV-7041	
UV-7056	TCV-381A	
Deleted	UV-7057	
UV-7045	UV-7046	
UV-7022		

b. Shuts off the letdown reheat heat exchanger tube side flow which puts this heat exchanger out of operation (closes TCV-381A).

c. Transfers control of TCV-386, the control valve at the letdown chiller heat exchanger shell side outlet, to TCY-381B which is located between the letdown reheat heat exchanger and the BTRS demineralizers. The temperature set point is 50 F.

d. Starts chiller and chiller pump.

For release (RCS boration), the master switch performs the following functions:

a. Aligns the proper flow path for boration.

Valves open	Valves closed	Valves modulating
HV-7054	HV-8245	TCV-386
UV-7041	UV-7002A	TCV-381A
UV-7057	UV-7002B	Deleted
Deleted	UV-7056	
UV-7046	UV-7045	
UV-7040	UV-7022	

b. Energizes the control of TCV-381A for the tube side flow rate to the letdown reheat heat exchanger by a signal from TCY-381A located between this heat exchanger and the BTRS demineralizers. The temperature set point is 140 F.

c. Transfers control of the control valve TCV-386 at letdown chiller heat exchanger shell side outlet to TCY-386 located in the line leading from the moderating heat exchanger to the reactor coolant filter. The temperature set point is 115 F.

d. Starts chiller and chiller pump.

The BTRS is put into operation as follows:

For dilution of the RCS (storage):

a. Cool down the chiller loop to about 40 F. This is not a requirement, but it will provide a faster cooldown transient of the BTRS.

b. Put the master switch in the dilute position.

c. Control the rate of dilution by positioning 3-way Valve HCV-387. The flow rate through the BTRS is dictated by the desired dilution rate of the RCS.

For boration of the RCS (releases):

a. Put the master switch in the boration position.

b. Control the rate of boration by positioning 3-way valve HCV-387. The flow rate through the BTRS is dictated by the desired boration rate of the RCS.

The BTRS is shut down by placing the master switch in the off position.

Several resin beds in the BTRS can be used as deborating demineralizers, which toward the end of the core life are used to dilute the RCS down to very low boron concentrations. To make such beds effective, the effluent concentration from the beds must be kept very low, close to zero ppm. This can be achieved by using fresh resin. This should be coupled with the normal replacement cycle of the resin beds.

HOT SHUTDOWN - If required for periods of maintenance, or following spurious reactor trips, the reactor can be held subcritical, but with the capability to return to full power within the period of time it takes to withdraw the control rods. During this hot shutdown, the average temperature is maintained at no-load T-avg by initiating steam dumping to provide residual heat removal or at later stages by running the reactor coolant pumps to maintain the system temperature.

Following shutdown, xenon buildup occurs and increases the degree of shutdown; i.e., initially, all control rods are inserted, and the core is maintained at a minimum of 1.3 percent Δ k/k subcritical. The effect of the xenon buildup is to increase this value to a maximum of about 4 percent Δ k/k at about 8 hours following shutdown from equilibrium full power conditions.

If a return to power is anticipated, the reactor is taken critical by withdrawing the control banks. The xenon transient is followed by rod movement and boration, as necessary, to maintain the control banks above the low insertion limit.

If a prolonged shutdown is required, the reactor coolant is borated to the hot standby, xenon-free value and the control rods are inserted.

9.3.4.2.3.3 Reactor Cooldown

Reactor cooldown is the operation which takes the reactor from hot standby to cold shutdown conditions (reactor is subcritical by at least 1.3 percent $\Delta k/k$ and Tavg ≤200 F).

Normal Cold Shutdown

While initiating a cold shutdown, the RCS hydrogen concentration is lowered by reducing the volume control tank overpressure, by replacing the volume control tank hydrogen atmosphere with nitrogen, and by continuous purging to the gaseous radwaste system.

Boration is one of the methods that can be used for reactivity control during a controlled plant cooldown. The boron concentration (in conjunction with Control Rods if available) is adjusted to maintain adequate shutdown margin as required due to the reactivity changes from the Reactor System cooldown. The RCS cold shutdown concentration is ensured by process control, i.e., knowledge of initial RCS boron concentrations and knowledge of amounts and concentrations of injected fluid ensures that the cold shutdown concentration is obtained.

If desired the reactor coolant boron concentration may be increased to the cold shutdown value before cooldown and depressurization of the reactor plant is initiated. After the boration is completed and reactor coolant samples verify that the concentration is correct, the operator resets the Reactor Makeup Control System for leakage and system contraction makeup at the shutdown reactor coolant boron concentration.

Contraction of the coolant during cooldown of the RCS results in actuation of the pressurizer level control to maintain normal pressurizer water level. The charging flow is increased, relative to letdown flow, and results in a decreasing volume control tank level. The volume control tank level controller automatically initiates makeup to maintain the inventory. Depressurizaton is performed by cooling the vapor space of the pressurizer with spray flow from an RCS loop with an operating reactor coolant pump.

After the RHRS is placed in service and the reactor coolant pumps are shut down, further cooling of the pressurizer liquid is accomplished by charging through the auxiliary spray line from the outlet of the CVCS regenerative heat exchanger. Coincident with plant cooldown, a portion of the reactor coolant flow is diverted from the RHRS to the CVCS for cleanup.

If required, operation of the mixed-bed demineralizers and gas stripping are started in advance of a planned shutdown; demineralization of ionic radioactive impurities and stripping fission gases reduce the reactor coolant activity level to permit personnel access for maintenance or refueling operations.

Safety-related Cold Shutdown

It is expected that the portions of the CVCS that are relied upon to perform reactor coolant system (RCS) purification, boration, letdown and depressurization operations, following an event that requires eventual cooldown and long term cooling, will function in the normal manner. Additional safety-related features have been designed and incorporated into the CVCS design to ensure that certain functions relied upon to take the reactor from the hot standby mode to the cold shutdown mode will be available; in other words, the safety grade features have been provided to augment normal shutdown features should equipment availability become a concern.

The following discussion describes the functioning of the CVCS using only safety-related equipment. Before cooldown and depressurization of the RCS is initiated, the RCS boron concentration is increased to the cold shutdown value. Borated water from the RWST is delivered to the RCS through the Emergency Core Cooling System (ECCS) cold leg injection lines via the boron injection tank (BIT) path and to the RCS through the reactor coolant pump (RCP) seals via seal injection lines. Charging flow is provided by the standby centrifugal charging pumps. Should RCS inventory letdown be required, this function can be accomplished by releasing RCS fluid to the pressurizer relief tank (PRT) via the excess letdown heat exchanger.

Following the initial RCS boration/letdown operation, the RCS is depressurized by venting the pressurizer to the PRT through the pressurizer power-operated relief valves (PORVs). RCS pressure control will be maintained by using the CVCS centrifugal charging pumps to provide RCS inventory control/makeup in conjunction with the use of the PORVs.

In the event normal charging and letdown paths are not available, RCS boration and inventory control functions will be maintained by utilizing redundant safety grade paths with the necessary throttling capability.

Section 7.4 provides a systems integrated discussion on safe shutdown/cold shutdown.

9.3.4.2.3.4 Emergency Boration

If emergency boration is required to achieve and maintain a safe shutdown, as described in Section 7.4, then the redundant centrifugal charging pumps can take suction from either the RWST or from the BAT via the boric acid transfer pumps and discharge either through the RCP seals, the charging line, or the boron injection tank path.

The preferred mode, if offsite power is available, is the normal shutdown operation described in Section 9.3.4.2.3.3. This mode utilizes the boric acid transfer system and normal seal injection and charging. If offsite power is unavailable, then the RWST and the boron injection tank path are used to borate the core. Further, if the RWST is rendered unavailable, then the boric acid transfer pumps can be loaded on the diesel and appropriate valves opened to provide suction to the centrifugal charging pumps.

Sufficient flow can be delivered, either through the BIT injection path or through the reactor coolant pump seals, to borate the reactor coolant system to a cold shutdown concentration. In either case, the flow is throttled to permit orderly matching of the letdown and RCS shrinkage to the charging flow. The centrifugal charging pumps are protected with open miniflow recirculation lines during low flow operations. The emergency letdown path to the PRT can also be throttled.

9.3.4.2.3.5 Emergency Core Cooling

The charging portion of the CVCS plays an integral part in the emergency core cooling requirements for accidents involving small breaks or inadvertent valve lifting in the main steam or feedwater systems.

The centrifugal charging pumps deliver borated water at the prevailing RCS pressure to the cold legs of the RCS. During the injection mode, the centrifugal charging pumps take suction from the refueling water storage tank.

The delivery of the boric acid provides negative reactivity to counteract the positive reactivity caused by the system cooldown.

The safety injection function of the CVCS is automatically actuated by a safety injection signal (SIS). For a RCS equivalent pipe break opening of 3/8-inch (liquid service) diameter or less, the charging system can maintain the pressurizer level at the normal operating level and pressure. Therefore, the emergency core cooling system would not be automatically actuated, and is not required. Details of the response by the CVCS are presented in Section 6.3.

9.3.4.3 Safety Evaluation

Safety evaluations are numbered to correspond to the safety design bases in Section 9.3.4.1.1.

SAFETY EVALUATION ONE - The safety-related portions of the CVCS are located in the reactor and auxiliary buildings. These buildings are designed to withstand the effects of earthquakes, tornadoes, hurricanes, floods, external missiles, and other appropriate natural phenomena. Sections 3.3, 3.4, 3.5, 3.7(B), and 3.8 provide the bases for the adequacy of the structural design of these buildings.

SAFETY EVALUATION TWO - The safety-related portions of the CVCS are designed to remain functional after an SSE. Sections 3.7(B).2 and 3.9(B) provide the design loading conditions that were considered. Sections 3.5 and 3.6 provide the hazards analyses to assure that a safe shutdown, as outlined in Section 7.4, can be achieved and maintained.

SAFETY EVALUATION THREE - The safety-related portions of the CVCS are completely redundant and, as indicated by Table 9.3-10, no single failure will compromise the system's safety functions. All vital power can be supplied from either onsite or offsite power systems, as described in Chapter 8.0.

SAFETY EVALUATION FOUR - The CVCS is initially tested with the program given in Chapter 14.0. Periodic inservice functional testing is done in accordance with Section 9.3.4.4.

Section 6.6 provides the ASME Boiler and Pressure Vessel Code, Section XI requirements that are appropriate for the CVCS.

SAFETY EVALUATION FIVE - Section 3.2 delineates the quality group classification and seismic category applicable to the safety-related portion of this system and supporting systems. Table 9.3-9 shows that the components meet the design and fabrication codes given in Section 3.2. Except for the control functions for the BAT system, all the power supplies and control functions necessary for safe function of the CVCS are Class IE, as described in Chapters 7.0 and 8.0. The controls for the BAT system are only required when the RWST is rendered inoperable, and the design of the control system is adequate for this situation.

SAFETY EVALUATION SIX - Section 9.3.4.2.1 describes provisions made to identify and isolate leakage or malfunction and to isolate the nonsafety-related portions of the system.

SAFETY EVALUATION SEVEN - Sections 6.2.4 and 6.2.6 provide the safety evaluation for the system containment isolation arrangement and testability.

SAFETY EVALUATION EIGHT - Any time that the plant is critical at power, the quantity of boric acid retained and ready for injection is always equal to or greater than that quantity required for normal cold shutdown, assuming that the control assembly of greatest worth is in its fully withdrawn position. This quantity always exceeds the quantity of boric acid required to bring the reactor to hot shutdown and to compensate for subsequent xenon decay. An adequate quantity of boric acid is available in either the refueling water storage tank or the boric acid tanks to achieve cold shutdown.

When the reactor is subcritical (i.e., during cold shutdown, hot shutdown, hot standby) LCV112A is placed in the VCT position and Volume Control Tank level provides indication of an inadvertent boron dilution Transient. Upon the detection of a Hi level during any of the aforementioned modes of operation, an alarm is sounded to alert the operator, and valve movement to terminate the dilution and start boration is manually initiated. These corrective actions prevent the core from becoming critical. (See also Section 15.4.6 for discussion of boron dilution accident.)

As a design capability, the rate of boration, with a single boric acid transfer pump operating, is sufficient to take the reactor from full power operation to one percent shutdown in the hot condition, with no rods inserted, in less than 90 minutes. In less than 90 additional minutes, enough boric acid can be injected to compensate for xenon decay, although xenon decay below the equilibrium operating level will not begin until approximately 25 hours after shutdown. Additional boric acid is employed if it is desired to bring the reactor to cold shutdown conditions.

Three separate and independent flow paths are available for reactor coolant boration; i.e., the charging line, the reactor coolant pump seal injection lines, and the boron injection tank path. A single active failure does not result in the inability to borate the RCS.

If the normal charging line is not available, charging to the RCS may be continued via reactor coolant pump seal injection at the rate of approximately 5 gpm per pump. At the charging rate of 20 gpm (5 gpm per reactor coolant pump), approximately 5 hours are required to add enough nominal 4 weight percent boric acid solution to counteract xenon decay, although xenon decay below the full power equilibrium operating level will not begin until approximately 25 hours after the reactor is shut down.

As backup to the normal boric acid supply, the operator can align the refueling water storage tank outlet to the suction of the charging pumps.

Should the normal charging and RCP seal injection paths not be available for boration or makeup, redundant safety related flow paths with necessary throttling capability are provided by the ECCS cold leg injection headers via the BIT path using either the BIT inlet MOVs or the 1" bypass lines using manual valves EMV151, EMV246, and EMV247.

The CVCS is capable of borating the RCS to cold shutdown concentration at a rate that is compatible with meeting the objectives of the cold shutdown design, described in Section 7.4. (Letdown to accommodate boration is also discussed in Section 7.4.) The CVCS is also capable of providing sufficient borated water from the refueling water storage tank to make up for primary shrinkage due to cooling or RCS inventory discharged during cooldown.

Since inoperability of a single component does not impair the ability to meet boron injection requirements, plant operating procedures allow the components to be temporarily out of service for repairs. However, with an inoperable component, the ability to tolerate additional component failure is limited. Therefore, operating procedures require immediate action to effect repairs of an inoperable component, restrict permissible repair time, and require demonstration of the operability of the redundant component.

SAFETY EVALUATION NINE - As discussed in Section 9.3.4.2, the CVCS is capable of making up for a small RCS leakoff up to approximately 120 gpm, using one centrifugal charging pump, and still maintaining seal injection flow to the reactor coolant pumps. This also allows for a minimum RCS cooldown contraction. This is accomplished with the letdown isolated.

SAFETY EVALUATION TEN - Section 6.3 provides the safety evaluation for the emergency core cooling operation of the CVCS. Portions of the CVCS are relied upon for safe shutdown and accident mitigation.

The failure mode and effects analysis summarized in Table 9.3-10 demonstrates that single active component failures do not compromise the CVCS safe shutdown functions of boration and makeup. This analysis also shows that single failures occurring during CVCS operation do not compromise the ability to prevent or mitigate accidents. The capabilities are accomplished by a combination of suitable redundancy, instrumentation for indication and/or alarm of abnormal conditions, and relief valves to protect piping and components against malfunctions.

Portions of the CVCS are also relied upon to provide safety-related boration and makeup. The capability of the CVCS to perform in conjunction with other systems of the cold shutdown design is presented in the Table 5.4A-3.

The CVCS shares components with the ECCS and containment isolation functions. These safeguard functions of the CVCS are addressed in Chapter 6.0.

SAFETY EVALUATION ELEVEN - Section 7.4 demonstrates how cold shutdown, including the function of boration, is achieved with the use of only safety-related equipment.

9.3.4.4 Tests and Inspections

As part of plant operation, periodic tests, surveillance inspections, and instrument calibrations are made to monitor equipment condition and performance. Most components are in use regularly; therefore, assurance of the availability and performance of the systems and equipment is provided by control room and/or local indication. Further information concerning preoperational and startup testing is described in Chapter 14.0.

Technical Specifications have been established concerning calibration, checking, and sampling of the CVCS.

9.3.4.5 Instrumentation Application

Process control instrumentation is provided to acquire data concerning key parameters about the CVCS. The location of the instrumentation is shown on Figure 9.3-8.

The instrumentation furnishes input signals for monitoring and/or alarming purposes. Indications and/or alarms are provided for the following parameters:

a. Temperature

b. Pressure

c. Flow

e. Water level

The instrumentation also supplies input signals for control purposes. Some specific control functions are:

a. Letdown flow is diverted to the volume control tank upon high temperature indication upstream of the mixed bed demineralizers.

b. Pressure upstream of the letdown heat exchanger is controlled to prevent flashing of the letdown liquid downstream of the letdown orifices.

c. Charging flow rate is controlled during charging pump operation.

d. Water level is controlled in the volume control tank.

e. Temperature of the boric acid solution in the batching tank is maintained.

f. Reactor makeup is controlled.

g. Temperature of letdown flow to the boron thermal regeneration system is controlled.

h. Temperature of the chilled water flow to the letdown chiller heat exchanger is controlled.

i. Temperature of letdown flow return from the boron thermal regeneration demineralizers is controlled.

j. Letdown flow rate to PRT is controlled.

k. Letdown temperature to PRT is controlled.

1. Seal injection flow is controlled

m. BIT flow is controlled

n. Normal charging pump recirculation isolation valve is automatically controlled by the pump discharge flow switch.

9.3.5 SERVICE GAS SYSTEM

The service gas system (SGS) provides nitrogen, hydrogen, carbon dioxide, oxygen, and laboratory gases to plant systems, as required. Bulk storage of service gases is described in Section 2.2. The compressed air system is described in Section 9.3.1, and the diesel generator starting air system is described in Section 9.5.6.

9.3.5.1 Design Bases

9.3.5.1.1 Safety Design Bases

The nitrogen, hydrogen, carbon dioxide, and oxygen systems serve no safety function, and there are no system safety design bases. Since the service gas storage vessels are maintained at high pressure, they are a potential hazard, and the location and design of the tanks and adjacent structures and/or barriers are consistent with the following safety design bases.

SAFETY DESIGN BASIS ONE - Rupture of a compressed gas storage vessel or piping will not cause unacceptable impairment of a safety-related system, structure, or component from blast forces, missile impacts, or pipe whipping.

SAFETY DESIGN BASIS TWO - Rupture of a compressed gas storage vessel or piping will not cause a deficiency of oxygen for breathing purposes in the control rooms.

SAFETY DESIGN BASIS THREE - Rupture of a hydrogen or oxygen storage vessel or piping will not cause the failure of safety-related components, systems, or structures as a result of delayed ignition or explosion.

9.3.5.1.2 Power Generation Design Bases

POWER GENERATION DESIGN BASIS ONE - The SGS transports low pressure nitrogen from the site storage facility for use as a cover gas, purge gas for corrosion prevention, and carrier gas. The SGS also transports high pressure nitrogen to be used as a source of potential energy.

POWER GENERATION DESIGN BASIS TWO - The SGS transports hydrogen from the site storage facility and stores hydrogen, in limited quantities within the power block, for use, in recombination with oxygen, as a cover gas, as a cooling medium, and as a stripping agent.

POWER GENERATION DESIGN BASIS THREE - The SGS transports carbon dioxide from a tanker truck connected to plant piping in the turbine building to be used as a purge gas. (Reference M-10KH section 3.1.1)

POWER GENERATION DESIGN BASIS FOUR - The SGS transports oxygen from the site storage facility to be used in recombination with hydrogen.

9.3.5.2 System Description

9.3.5.2.1 General Description

The SGS, which is shown in Figure 9.3-9, consists of a network of piping conveying nitrogen, hydrogen, carbon dioxide, and oxygen from site storage facilities to the standard power block for various uses. For each gas entering the power block, a master shutoff valve and a pressure regulator are provided. In addition, for hydrogen lines entering the power block, an excess flow check valve was provided. Section 2.2 describes the gas storage facilities.

High and low pressure nitrogen enter the power block through separate headers.

A separate low volume source of hydrogen or nitrogen is provided to supply a cover gas for the reactor coolant drain tank which is located inside the containment. This source is located in the hot machine shop which is outside any safety-related building.

Each of the other gases enters the power block at a single location. Figure 9.3-10 shows where each of the gases enters the power block.

The service gas main headers are all 2-inch lines, with the exception of the high pressure nitrogen supply line which is 1 inch to reduce the potential for failure. From the headers, 1-inch service gas lines are routed to their associated service location.

Table 9.3-11 lists the various components supplied by the SGS.

In addition to the major gas distribution headers, gas bottles are located within the plant in nonsafety-related areas to provide small quantities of specialty gases for laboratory analysis or localized testing. An exception to this are small cylinders of oxygen and hydrogen/nitrogen mix located on the hydrogen analyzer skid on elevation 2047’ near the equipment hatch and in the containment purge supply air handling room. Their location, which is shown in Figure 9.3-10, is in accordance with safety codes, including the Wisconsin Administrative Code. A list of laboratory gases is provided in Table 9.3-12.

9.3.5.2.2 Component Description

The gas storage facilities outside the power block are described in Section 2.2.

Piping and valves are designed and fabricated to meet the requirements of the Power Piping Code, ANSI B31.1. Packless valves are used to minimize gaseous leakage. All headers are carbon steel, except the oxygen piping which is constructed of welded stainless steel.

Storage facilities for laboratory gases are provided in the nonsafety-related building of the power block as indicated in Figure 9.3-10.

9.3.5.2.3 System Operation

During normal operation, service gas received from the site storage facility is maintained at the required pressure through pressure regulators. Service gas flow is controlled by those systems being served.

During plant startup and shutdown, service gas for filling and purging is manually controlled.

9.3.5.3 Safety Evaluation

Safety evaluations are numbered to correspond to the safety design basis.

SAFETY EVALUATION ONE - Section 2.2 provides an evaluation which demonstrates that any hazards due to the gas storage facilities will not adversely affect safety-related structures, systems, or components due to blast force, missile impact, or pipe whipping.

SAFETY EVALUATION TWO - The routing of service gases within the power block will not allow escaping gas to enter the control building air intakes. The effects of a high pressure nitrogen pipe rupture are discussed in Section 3.6. Section 2.2 provides an evaluation of gas storage facilities outside the power block.

SAFETY EVALUATION THREE - All lines associated with the distribution of hydrogen within the safety-related structure are less than 1 inch in diameter and carry moderate energy fluid, hence no break needs to be assumed per NRC Branch Technical Position MEB 3-1. In addition, if a rupture were to occur there is insufficient volume associated with the bottle storage for the reactor coolant drain tank to create an explosive mixture. For the hydrogen bulk storage supply, an excess flow check valve is provided to keep the maximum blowdown below an explosive mixture.

The maximum rate of blowdown for hydrogen from a ruptured pipe is eight scfm. The minimum ventilation rate in areas where hydrogen gas lines are routed is 300 scfm, which results in a maximum hydrogen gas concentration of less than 3 volume percent. Thus, an explosive mixture cannot form. Oxygen is not routed within safety-related structures.

9.3.5.4 Tests and Inspections

Preoperational testing is performed, as outlined in Chapter 14.0. The system is inspected to verify that the applicable plans, drawings, and specification are met. Applicable code-required testing is performed. The service gas system operates continuously throughout the life of the plant, thus demonstrating the structural and leaktight integrity of all the components.

9.3.5.5 Instrumentation Application

Pressure indication is provided in most systems served by the service gas system.

9.3.6 BORON RECYCLE SYSTEM

The boron recycle system (BRS) receives reactor coolant effluent for the purpose of storage until it can either be reused or disposed of by processing it through the Liquid Radwaste System.

9.3.6.1 Design Bases

9.3.6.1.1 Safety Design Basis

The BRS serves no safety function.

9.3.6.1.2 Power Generation Design Basis

POWER GENERATION DESIGN BASIS ONE - The BRS collects and processes plant effluents which can be potentially reused. For the most part, this effluent is the deaerated, tritiated, borated, and radioactive water from the letdown and process drains.

The BRS is designed to collect the excess reactor coolant that results from certain plant operations, as described in Section 9.3.6.2.1.

POWER GENERATION DESIGN BASIS TWO - The BRS is designed to process the total volume of water collected during a core cycle as well as shortterm surges. The design surge is that produced by a cold shutdown and subsequent startup during the latter part of a core cycle or by a refueling shutdown and startup.

POWER GENERATION DESIGN BASIS THREE - Deleted.

POWER GENERATION DESIGN BASIS FOUR - The BRS uses design and fabrication codes consistent with quality group D (augmented), as assigned by Regulatory Guide 1.143 for radioactive waste management systems.

9.3.6.2 System Description

9.3.6.2.1 General Description

The BRS is shown in Figure 9.3-11. The BRS is designed to collect, via the letdown line in the chemical and volume control system (CVCS), the excess reactor coolant that results from the following plant operations during one core cycle:

a. Dilution for core burnup from approximately 1,600 ppm boron at the beginning of an eighteen (18) month core cycle to approximately 10 ppm near the end of the core cycle.

b. Hot shutdowns and startups. Four hot shutdowns are assumed to take place during an annual core cycle.

c. Cold shutdowns and startups. Three cold shutdowns are assumed to take place during an annual core cycle.

d. Refueling shutdown and startup.

The BRS also collects water from the following sources:

a. Reactor coolant drain tank (liquid waste processing system) - collects leakoff type drains from equipment inside the containment.

b. Volume control tank and charging pump suction pressure reliefs (CVCS), safety injection pump pressure reliefs, and RHR pump pressure reliefs.

c. Boric acid blending tee (CVCS) - provides for the storage of boric acid if a boric acid tank must be emptied for maintenance. The boric acid solution is stored in a recycle holdup tank after first being diluted with reactor makeup water by the blending tee, if necessary, to ensure against precipitation of the boric acid in the unheated recycle holdup tank.

d. Accumulators (safety injection system) - collect effluent resulting from leak testing of accumulator check valves.

e. Deleted.

f. Fuel transfer canal (via the fuel storage pool cooling and cleanup system) - provides a means of storing the fuel transfer canal water in the event maintenance is required on the transfer equipment.

g. Safety injection system - accepts flush water when the boron injection tank valves are being tested or the system flushed.

h. Deleted.

When water is directed to the BRS, the flow first passes through the recycle evaporator feed demineralizers and filters and then into the recycle holdup tanks. The recycle evaporator feed pumps can then be used to transfer liquid from the recycle holdup tanks to the Liquid Radwaste System or used to recirculate water through the recycle evaporator feed demineralizers for additional cleanup. Water can also be transferred to the fuel transfer canal or to the suction of the charging pumps (CVCS) for refilling the RCS. Water can also be transferred from one recycle holdup tank to the other, if desired.

9.3.6.2.2 Component Descriptions

Codes and standards applicable to the BRS are listed in Table 3.2-1 and 9.3-13. The BRS is designed and constructed in accordance with quality group D (augmented), as assigned by Regulatory Guide 1.143 for radioactive waste management systems. The BRS is housed within a seismically designed building, as described in Section 3.8.6. The performance parameters to which the individual components of the BRS are designed are listed in Table 9.3-13.

RECYCLE EVAPORATOR FEED PUMPS - Two centrifugal, canned pumps supply feed to the Liquid Radwaste System from the recycle holdup tanks. The pumps can also be used to recirculate water from the recycle holdup tanks through the recycle evaporator feed demineralizers for cleanup, if desired. An auxiliary discharge connection is provided to return water to the fuel transfer canal from the recycle holdup tanks, if those tanks were used for storage of fuel transfer canal water during refueling equipment maintenance. Another auxiliary discharge connection is provided to supply water to the suction of the charging pumps (CVCS) for refilling the RCS after loop or system draindown.

RECYCLE HOLDUP TANKS - Two recycle holdup tanks provide storage for radioactive fluid which is discharged from the RCS during startup, shutdown, load changes, and boron dilution. The sizing criteria is based on the design surge that is produced by a cold shutdown and subsequent startup during the latter part of core cycle or by refueling shutdown and startup.

Each tank has a diaphragm which prevents air from dissolving in the water and prevents the hydrogen and fission gases in the water from mixing with the air. The volume in the tank above the diaphragm is continuously ventilated with building supply air, and any gas which accumulates below the diaphragm is intermittently vented to the gaseous waste processing system via the recycle holdup tank vent eductor.

In addition to the collection of effluents, the recycle holdup tanks provide the following functions:

a. Serve as a head tank for the recycle evaporator feed pumps.

b. Provide holdup for a RCS drain to the centerline of the reactor vessel nozzles, including the pressurizer and steam generators.

c. Provide storage for fuel transfer canal water during refueling equipment maintenance.

d. Collect discharges from the various relief valves.

RECYCLE EVAPORATOR FEED DEMINERALIZERS - Two flushable, mixed bed demineralizers remove fission products from the fluid directed to the recycle holdup tanks. The demineralizers also provide a means of cleaning the recycle holdup tank contents via recirculation.

RECYCLE EVAPORATOR FEED FILTER - This filter collects resin fines and particulates from the fluid entering the recycle holdup tanks.

RECYCLE HOLDUP TANK VENT EDUCTOR - The eductor is designed to pull gases from under the diaphragm in a recycle holdup tank and deliver them to the gaseous waste processing system. Nitrogen, provided by the standby waste gas compressor, provides the motive force.

9.3.6.2.3 System Operation

The BRS is manually operated, with the exception of a few automatic protection functions. These automatic functions protect the recycle evaporator feed demineralizers from high inlet temperature and high differential pressure, prevent high vacuum from being drawn on the recycle holdup tank diaphragm, protect the recycle evaporator feed pumps from low net positive suction head. The BRS has sufficient instrumentation readouts and alarms to provide the operator information to assure proper system operation.

RECYCLE HOLDUP TANK VENTING - Because hydrogen is dissolved in the reactor coolant at a concentration of 25 - 50cc hydrogen per kilogram of reactor coolant, a portion of the hydrogen along with fission gases will come out of solution in the recycle holdup tank under the diaphragm. The hydrogen and fission gases are vented to the gaseous radwaste system, as required. The total integrated flow from the letdown line and the reactor coolant drain tank to the recycle holdup tanks is monitored. An alarm indicates when a sufficient amount of water has passed to the recycle holdup tanks to require venting of the accumulated gases.

When venting of either recycle holdup tank is required, the following steps are observed:

a. The standby gas compressor is started up, and the vent from the holdup tank is opened. The vent flow is throttled to approximately 1 scfm. At this time, a sample of the vent gases can be taken to check the composition.

b. When the gases have been vented from the recycle holdup tank, the pressure in the vent line decreases, which automatically trips the recycle holdup tank vent isolation valve closed. The recycle holdup tank vent isolation valve may also be closed manually.

c. After the vent isolation valve closes, the manual vent valve is closed, and the gas compressor is shut down.

9.3.6.3 Safety Evaluation

The BRS has no safety-related functions.

9.3.6.4 Tests and Inspections

The BRS is in intermittent use throughout normal reactor operation. Periodic visual inspection and preventive maintenance are conducted using normal industry practice. Refer to Chapter 14.0 for further information concerning preoperational and startup testing.

9.3.6.5 Instrumentation Application

The instrumentation available for the BRS is discussed below. Alarms are provided as noted. There is also a common alarm on the main control board which indicates any alarms on the BRS panel.

TEMPERATURE - Instrumentation is provided to measure the temperature of the inlet flow to the recycle evaporator feed demineralizers and to control a three-way bypass valve. If the inlet temperature becomes too high, the instrumentation aligns the valve to bypass the demineralizers. Local temperature indication and a high temperature alarm on the BRS panel are provided by this instrumentation.

PRESSURE - Instrumentation is provided to measure the pressure differential across the recycle evaporator feed demineralizers and to control the same three-way valve as discussed above (but independently of the temperature control). If the pressure drop through the demineralizers is too high, this instrumentation aligns the valve to divert flow directly to the recycle evaporator feed filter. Local pressure differential indication and a high alarm on the BRS panel are provided by this instrumentation.

TABLE 9.3-1

COMPONENT DESCRIPTION
COMPRESSED AIR SYSTEM

Component	
Air Compressors	
Type	Nonlubricated, rotary
Capacity, scfm	932
Quantity	3
Motor horsepower	250
Operating pressure, psig	122
Design pressure, psig	150
Type (Sullair)	Lubricated, rotary
Out of Service TMO 16-004-GB	
Capacity, scfm	1500
Quantity	1
Motor Horsepower	350
Operating Pressure, psig	100-110
Design Pressure, psig	150
Air Receivers	
Type	Vertical
Quantity	3
Capacity, ft3, each	52
Operating pressure, psig	122
Design pressure, psig	125
Supply gas pressure, psig	122
Stored energy, ft-lb, each	3.67×10^6
Design code	ASME, Section VIII
Prefilters and Afterfilters	
Type	Cartridge, disposable
Quantity	2
Capacity, scfm, each	1200 and 1070
Operating pressure, psig	122
Design pressure, psig	150
Design code	ASME, Section VIII
Air Dryers	
Type	Heatless, desiccant
Quantity	2
Capacity, scfm, each	1200
Operating pressure, psig	122
Design pressure, psig	150
Design code	ASME, Section VIII
Type	Refrigerated
Quantity	1
Capacity, scfm	1500
Operating Pressure, psig	100
Design Pressure, psig	150

TABLE 9.3-1 (Sheet 2)

Component	
Aux. Feedwater Control Valve and Main Steam Atmospheric Relief Valve Accumulator	
Type	Horizontal, carbon steel
Quantity	4
Capacity, ft3, each	25
Design pressure, psig	850
Operating Range, psig 650-750	
Nominal Supply pressure, psig	750
Stored energy, ft-lb, each	9.63×10^6
Code requirements	ASME III, Class 3
Valve operating time provided, hrs/valve	8 (One valve cycle every 20 min./aux. F.W. control valve) (One valve cycle every 10 min./M.S. atm. relief valve)
Main Feedwater Control Valve Accumulator	
Type	Vertical, carbon steel
Quantity	1
Capacity, ft3, each	30
Design pressure, psig	825
Operating Range, psig 650-750	
NominalSupply pressure, psig	750
Stored energy, ft-lb, each	1.55×10^7
Code requirements	ASME III, Class 3
Valve operating time provided, hrs/valve	4 (One valve cycle every 30 min.)

TABLE 9.3-2

SAFETY-RELATED PNEUMATICALLY OPERATED VALVES

Valve Number	Description	Safe Position	Failure Mode on Loss of Air Supply	Safety Function	Notes
AB-HV-05	Loop 2 Steam Supply to AFW Pump Turbine	Open	Open	Admit steam to AFW pump turbine and secondary side pressure boundary isolation	
AB-HV-06	Loop 3 Steam Supply to AFW Pump Turbine	Open	Open	Admit steam to AFW pump turbine and secondary side pressure boundary isolation	
AB-HV-12	Main Steam Iso. Bypass Valve Loop 4	Closed	Closed	Secondary side pressure boundary isolation and steam line warmup	
AB-HV-15	Main Steam Iso. Bypass Valve Loop 1	Closed	Closed	Secondary side pressure boundary isolation and steam line warmup	
AB-HV-18	Main Steam Iso. Bypass Valve Loop 2	Closed	Closed	Secondary side pressure boundary isolation and steam line warmup	
AB-HV-21	Main Steam Iso. Bypass Valve Loop 3	Closed	Closed	Secondary side pressure boundary isolation and steam line warmup	
AB-HV-48	Loop 2 Steam Supply to AFW Turbine Bypass	Closed	Closed	Secondary side pressure boundary isolation and steam line keep warm	
AB-HV-49	Loop 3 Steam Supply to AFW Turbine Bypass	Closed	Closed	Secondary side pressure boundary isolation and steam line keep warm	
AB-LV-07	Main Steam Line Drain Valve Loop 3	Closed	Closed	Secondary side pressure boundary isolation and condensate drain	
AB-LV-08	Main Steam Line Drain Valve Loop 2	Closed	Closed	Secondary side pressure boundary isolation and condensate drain	
AB-LV-09	Main Steam Line Drain Valve Loop 1	Closed	Closed	Secondary side pressure boundary isolation and condensate drain	

TABLE 9.3-2 (Sheet 2)

Valve Number	Description	Safe Position	Failure Mode on Loss of Air Supply	Safety Function	Notes
AB-LV-10	Main Steam Line Drain Valve Loop 4	Closed	Closed	Secondary side pressure boundary isolation and condensate drain	
AB-PV-01	Steam Gen. A Atm. Relief Valve	Closed	Closed	Secondary side pressure boundary isolation, secondary side heat removal, and pressure relief	2
AB-PV-02	Steam Gen. B Atm. Relief Valve	Closed	Closed	Secondary side pressure boundary isolation, secondary side heat removal, and pressure relief	2
AB-PV-03	Steam Gen. C Atm. Relief Valve	Closed	Closed	Secondary side pressure boundary isolation, secondary side heat removal, and pressure relief	2
AB-PV-04	Steam Gen. D Atm. Relief Valve	Closed	Closed	Secondary side pressure boundary isolation, secondary side heat removal, and pressure relief	2
AE-FV-43	Steam Gen. A Chemical Control	Closed	Closed	Secondary side pressure boundary isolation and chemistry control	
AE-FV-44	Steam Gen. B Chemical Control	Closed	Closed	Secondary side pressure boundary isolation and chemistry control	
AE-FV-45	Steam Gen. C Chemical Control	Closed	Closed	Secondary side pressure boundary isolation and chemistry control	
AE-FV-46	Steam Gen. D Chemical Control	Closed	Closed	Secondary side pressure boundary isolation and chemistry control	
AE-FCV-510	Feedwater Control Valve Loop 1	Closed	Closed	Backup valve for secondary side pressure boundary isolation	
AE-FCV-520	Feedwater Control Valve Loop 2	Closed	Closed	Backup valve for secondary side pressure boundary isolation	

TABLE 9.3-2 (Sheet 3)

Valve Number	Description	Safe Position	Failure Mode on Loss of Air Supply	Safety Function	Notes
AE-FCV-530	Feedwater Control Valve Loop 3	Closed	Closed	Backup valve for secondary side pressure boundary isolation	
AE-FCV-540	Feedwater Control Valve Loop 4	Closed	Closed	Backup valve for secondary side pressure boundary isolation	
AE-FCV-550	Feedwater Control Bypass Valve Loop 1	Closed	Closed	Backup valve for secondary side pressure boundary isolation	
AE-FCV-560	Feedwater Control Bypass Valve Loop 2	Closed	Closed	Backup valve for secondary side pressure boundary isolation	
AE-FCV-570	Feedwater Control Bypass Valve Loop 3	Closed	Closed	Backup valve for secondary side pressure boundary isolation	
AE-FCV-580	Feedwater Control Bypass Valve Loop 4	Closed	Closed	Backup valve for secondary side pressure boundary isolation	
AL-HV-06	Turbine AFP Disch. to Steam Gen. D	Open	Open	Control AFW flow to steam generators; isolation of AFW to broken loop	1
AL-HV-08	Turbine AFP Disch. to Steam Gen. A	Open	Open	Control AFW flow to steam generators; isolation of AFW to broken loop	1
AL-HV-10	Turbine AFP Disch. to Steam Gen. B	Open	Open	Control AFW flow to steam generators; isolation of AFW to broken loop	1
AL-HV-12	Turbine AFP Disch. to Steam Gen. C	Open	Open	Control AFW flow to steam generators; isolation of AFW to broken loop	1
BB-HV-8026	Ctmt. Iso. Valve - Nitrogen to PRT	Closed	Closed	Containment isolation	
BB-HV-8027	Ctmt. Iso. Valve - Nitrogen to PRT	Closed	Closed	Containment isolation	
BG-HV-8152	Ctmt. Iso. Valve - Letdown Line	Closed	Closed	Containment isolation	
BG-HV-8160	Ctmt. Iso. Valve - Letdown Line	Closed	Closed	Containment isolation	
BL-HV-8047	Ctmt. Iso. Valve - Reactor Makeup Water	Closed	Closed	Containment isolation	
BM-HV-01	Steam Gen. A to SGBD Flash Tank Valve	Closed	Closed	Secondary side pressure boundary isolation	
BM-HV-02	Steam Gen. B to SGBD Flash Tank Valve	Closed	Closed	Secondary side pressure boundary isolation	
BM-HV-03	Steam Gen. C to SGBD Flash Tank Valve	Closed	Closed	Secondary side pressure boundary isolation	

TABLE 9.3-2 (Sheet 4)

Valve Number	Description	Safe Position	Failure Mode on Loss of Air Supply	Safety Function	Notes
BM-HV-04	Steam Gen. D to SGBD Flash Tank Valve	Closed	Closed	Secondary side pressure boundary isolation	
BN-HCV-8800A	RWST Iso. Valve to SFP Cleanup	Closed	Closed	System pressure boundary isolation	
BN-HCV-8800B	RWST Iso. Valve to SFP Cleanup	Closed	Closed	System pressure boundary isolation	
EF-HV-43	ESW to Air Compressor Iso. Valve	Closed	Closed	System pressure boundary isolation	
EF-HV-44	ESW to Air Compressor Iso. Valve	Closed	Closed	System pressure boundary isolation	
EG-HV-69A	CCW Supply Waste Header Iso. Valve	Closed	Closed	System pressure boundary isolation	
EG-HV-69B	CCW Return Waste Header Iso. Valve	Closed	Closed	System pressure boundary isolation	
EG-HV-70A	CCW Supply Waste Header Iso. Valve	Closed	Closed	System pressure boundary isolation	
EGLV-0001	Demin Water to CCW Surge Tank A	Closed	Closed	Level control and CCW pressure boundary	
EGLV-0002	Demin Water to CCW Surge Tank B	Closed	Closed	Level control and CCW pressure boundary	
EG-HV-70B	CCW Return Waste Header Iso. Valve	Closed	Closed	System pressure boundary isolation	
EG-TV-29	CCW Heat Exchanger A Bypass Iso. Valve	Closed	Closed	Maintain CCW heat exchanger discharge temperature and isolate bypass flow	
EGRV-0009	CCW Surge Tank A Vent	Closed	Closed	Close on high radiation and CCW pressure boundary	
EGRV-0010	CCW Surge Tank B Vent	Closed	Closed	Close on high radiation and CCW pressure boundary	
EG-TV-30	CCW Heat Exchanger B Bypass Iso. Valve	Closed	Closed	Maintain CCW heat exchanger discharge temperature and isolate bypass flow	
EJ-FCV-0618	RHR HX A Bypass	Closed	Closed	Isolate bypass flow	
EJ-FCV-0619	RHR HX B Bypass	Closed	Closed	Isolate bypass flow	
EJ-HCV-0606	RHR HX A Discharge	Open	Open	Remain open to ensure flow path	
EJ-HCV-0607	RHR HX B Discharge	Open	Open	Remain open to ensure flow path	
EJ-HV-8825	Test Line Iso. Valve - Hot Leg Injection	Closed	Closed	Containment Isolation	
EJ-HV-8890A	Test Line Iso. Valve - Cold Leg Injection	Closed	Closed	Containment Isolation	
EJ-HV-8890B	Test Line Iso. Valve - Cold Leg Injection	Closed	Closed	Containment Isolation	
EM-HV-8823	Test Line Iso. Valve - SI to RCS Cold Leg	Closed	Closed	Containment Isolation	
EM-HV-8824	Test Line Iso. Valve - Hot Legs 1 and 4	Closed	Closed	Containment Isolation	
EM-HV-8843	Test Line Iso. Valve - BIT Line	Closed	Closed	Containment Isolation	

TABLE 9.3-2 (Sheet 5)

Valve Number	Description	Safe Position	Failure Mode on Loss of Air Supply	Safety Function	Notes
EM-HV-8871	Ctmt. Iso. Valve - SI Test Line	Closed	Closed	Containment isolation	
EM-HV-8881	Test Line Iso. Valve - Hot Legs 2 and 3	Closed	Closed	Containment isolation	
EM-HV-8882	BIT Test Line Iso. Valve	Closed	Closed	System pressure boundary isolation	
EM-HV-8888	Ctmt. Iso. Valve - Accumulator Fill	Closed	Closed	Containment isolation	
EM-HV-8889A	HL 1 SI Test Line	Closed	Closed	System pressure boundary isolation	
EM-HV-8889B	HL 2 SI Test Line	Closed	Closed	System pressure boundary isolation	
EM-HV-8889C	HL 3 SI Test Line	Closed	Closed	System pressure boundary isolation	
EM-HV-8889D	HL 4 SI Test Line	Closed	Closed	System pressure boundary isolation	
EM-HV-8964	Ctmt. Iso. Valve - SI Test Line	Closed	Closed	Containment isolation	
EP-HV-8875A	N2 Supply Iso. Valve	Closed	Closed	System pressure boundary isolation	
EP-HV-8875B	N2 Supply Iso. Valve	Closed	Closed	System pressure boundary isolation	
EP-HV-8875C	N2 Supply Iso. Valve	Closed	Closed	System pressure boundary isolation	
EP-HV-8875D	N2 Supply Iso. Valve	Closed	Closed	System pressure boundary isolation	
EP-HV-8877A	Acc. Tank A to SIS Test Line Iso. Valve	Closed	Closed	System pressure boundary isolation	
EP-HV-8877B	Acc. Tank B to SIS Test Line Iso. Valve	Closed	Closed	System pressure boundary isolation	
EP-HV-8877C	Acc. Tank C to SIS Test Line Iso. Valve	Closed	Closed	System pressure boundary isolation	
EP-HV-8877D	Acc. Tank D to SIS Test Line Iso. Valve	Closed	Closed	System pressure boundary isolation	
EP-HV-8878A	Acc. Tank Fill from SI Pump	Closed	Closed	System pressure boundary isolation	
EP-HV-8878B	Acc. Tank Fill from SI Pump	Closed	Closed	System pressure boundary isolation	
EP-HV-8878C	Acc. Tank Fill from SI Pump	Closed	Closed	System pressure boundary isolation	
EP-HV-8878D	Acc. Tank Fill from SI Pump	Closed	Closed	System pressure boundary isolation	

TABLE 9.3-2 (Sheet 6)

Valve Number	Description	Safe Position	Failure Mode on Loss of Air Supply	Safety Function	Notes
EP-HV-8879A	Acc. Tank A to SIS Test Line Iso. Valve	Closed	Closed	System pressure boundary isolation	
EP-HV-8879B	Acc. Tank B to SIS Test Line Iso. Valve	Closed	Closed	System pressure boundary isolation	
EP-HV-8879C	Acc. Tank C to SIS Test Line Iso. Valve	Closed	Closed	System pressure boundary isolation	
EP-HV-8879D	Acc. Tank D to SIS Test Line Iso. Valve	Closed	Closed	System pressure boundary isolation	
EP-HV-8880	Ctmt. Iso. Valve - N2 Supply to Accum.	Closed	Closed	Containment isolation	
FC-FV-310	AFP Steam Trap Isolation Valve	Closed	Closed	Condensate removal	
FCLV-0010	Aux Feedwater pump turbine bypass trap to Cond Valve	Closed	Closed	Level control and Aux Feedwater piping pressure boundary	
HB-HV-7126	Ctmt. Iso. Valve - RCDT to Waste Gas Comp.	Closed	Closed	Containment isolation	
HB-HV-7136	Ctmt. Iso. Valve - RCDT to Recy. Holdup Tank	Closed	Closed	Containment isolation	
HB-HV-7150	Ctmt. Iso. Valve - RCDT to Recy. Holdup Tank	Closed	Closed	Containment isolation	
HB-HV-7176	Ctmt. Iso. Valve - RCDT to Waste Gas Comp.	Closed	Closed	Containment isolation	
KA-FV-29	Ctmt. Iso. Valve - Inst. Air Line	Closed	Closed	Containment isolation	
LF-FV-96	Ctmt. Iso. Valve - Sump to Floor Drain Tank	Closed	Closed	Containment isolation	

NOTES: (1) Provided with backup compressed gas supply to open for safety functions.
(2) Provided with backup compressed gas supply to modulate valve as required during cooldown from hot shutdown condition to cold shutdown.

TABLE 9.3-3

PRIMARY SAMPLING SYSTEM
SAMPLE POINT DESIGN DATA

Sample Conditions
(Operating)

Sample Point No.	Sample Name Primary Sampling System	Pressure psig**	Temp F**	Typical Analysis*
1	Steam generator blowdown A	1091	557	Gross activity by liquid monitor
2	Steam generator blowdown B	1091	557	Gross activity by liquid monitor
3	Steam generator blowdown C	1091	557	Gross activity by liquid monitor
4	Steam generator blowdown D	1091	557	Gross activity by liquid monitor
5	RCS hot legs sample (loop 1 or 3)	2235	618	Gross activity, tritium, hydrogen, oxygen, lithium, radioiodine, pH, conductivity, boron, chloride/fluoride, silica, Ca, Mg, sulfate, ammonia, gross alpha, total suspended solid, dose equivalent iodine, fuel reliability indicator
6	Pressurizer liquid space	2235	653	Boron, oxygen
7	Pressurizer vapor space	2235	653	Hydrogen, oxygen, nitrogen, fission gases, helium
8	CVCS letdown upstream of demineralizer	300	115	Gross activity, activity by liquid monitor Note: other data same as RCS
9	CVCS letdown downstream of demineralizer	300	115	Gross activity, chloride, fluoride, ph, silica, decontamination factor
10	Reactor makeup water storage tank	100	80	Chloride/fluoride, total solid, total suspended solid, oxygen, pH, conductivity, boron, Sodium, tritium, silica, Al, Ca, Mg
11	Accumulator tanks A, B, C, and D	650	150	Boron, chloride/fluoride
12	Boric acid tank A and B	Atmospheric	120	Boron, sulfate, silica, Al, Ca, Mg, gross activity, Chloride/fluoride, iron
13	Reactor coolant drain tank	134	140	Hydrogen, oxygen, nitrogen, helium, fission gases
14	*Residual heat removal heat exchanger A and B	540	140	Boron, chloride/fluoride, conductivity, lithium, gross activity, sulfate, tritium, Mg, pH, silica, Ca, total suspended solid
15	Boron thermal regeneration demineralizer effluent	180	115	Boron

*Sampling frequencies are specified within applicable chemistry procedures.

**The pressures and temperatures listed in this table represent nominal values at the time of plant licensing and should not be viewed as actual values observabrele in the field.

TABLE 9.3-4

RADWASTE SAMPLING SYSTEM
SAMPLE POINT DESIGN DATA

Sample Conditions

(Operating)

Sample Point No	Sample Name Radwaste Sampling System	Pressure psig**	Temp F**	Typical Analysis*
1	Waste holdup tank	108	100	Gross activity, pH, silica, conductivity
2	Waste evaporator condensate tank	108	120	Gross activity, general surveillance
3	Waste evaporator distillate	65	120	Gross activity, general surveillance
4	Chemical drain tank	108	100	Conductivity, pH
5	Laundry and hot shower tank	108	100	Gross activity, general surveillance
6	Laundry water storage tank	108	100	Gross activity, general surveillance
7	Floor drain tanks A and B	108	100	Gross activity, silica, pH, conductivity, oil and grease
8	Waste monitor tank A	108	100	Gross activity, tritium, dissolved and entrained gas, total suspended solid, oil and grease
9	Waste monitor tank B	108	100	Gross activity, tritium, dissolved and entrained gas, total suspended solid, oil and grease
10	Steam generator blowdown surge tank	200	150	Gross activity, tritium, dissolved and entrained gas, total suspended solid, oil and grease
11	Recycle holdup tanks A and B	110	115	Gross activity, chloride, fluoride, boron, conductivity
12	Recycle evaporator condensate demineralizer	65	210	Gross activity, general surveillance
13	Fuel pool cleanup demineralizer inlet	134	140	Gross activity, chloride, fluoride, boron, pH, total suspended solid, silica, sulfate, tritium, gross alpha

TABLE 9.3-4 (sheet 2)

RADWASTE SAMPLING SYSTEM
SAMPLE POINT DESIGN DATA

Sample Conditions

(Operating)

Sample Point No	Sample Name Radwaste Sample System	Pressure psig**	Temp F**	Typical Analysis*
14	Fuel pool cleanup demineralizer outlet	134	140	Gross activity, chloride, fluoride
15	Secondary liquid waste evaporator distillate	150	120	Gross activity, general surveillance
16	Secondary liquid waste monitor tanks	150	115	Gross activity, tritium, dissolved and entrained gas, total suspended solid, oil and grease

*Sampling frequencies are specified within applicable chemistry procedures.
**The pressures and temperatures listed in this table represent nominal values at the time of plant licensing and should not be viewed as actual values observable in the field.

TABLE 9.3-5

PROCESS SAMPLING SYSTEM
SAMPLE POINT DESIGN DATA

Sampling Point	Operating Conditions Pressure	Temp. F	Analysis	Ranges	Alarm Hi/Lo	Purpose for Measurement and General Comments
1 Condenser hotwell	29.5" Hg vac	126	Cation Cond	0.055-1.0 µS/cm	0.3/-	Monitor condenser leakage and identify leak point
			Na^+	0.01-10 ppb	0.1/-	Support conductivity data related to cond tube leak
2 Condensate pump discharge header	536 psig	127	Spec Cond	1-100 µS/cm	60.0/-	Aids in condensate and feedwater pH control - Oxygen Control Chemical control
			Cation Cond	0.055-1.0 µS/cm	0.3/-	Monitor condenser tube leak
			pH	6-11 pH	10.5/8.9	Support conductivity data related to pH control
			Na^+	0.01-10 ppb	0.1/-	Monitor condenser tube leak
			Dissolved O_2	0.1-20 ppb	7/-	Monitor condenser air leak and control oxygen control chemical feed
			Corrosion Product Concentration	-	-	Monitor condensate corrosion product transport
3 Condensate demin outlet	545	131	Cation Cond	0.055-1.0 µS/cm	0.3/-	Detect early breakthrough of demineralizers
			Na+	0.01-10 ppb	0.3/-	Detect unexpected pickup or breakthrough
4 LP feedwater heater outlet	375	336	Spec Cond	1-100 µS/cm	60.0/-	Control amine feed rate, pH control
			pH	6-11 pH	10.5/9.0	Check effectiveness of pH control by spec cond
5 Steam generator feedwater	1104	445	Cation Cond	0.055-1.0 µS/cm	0.3/-	Monitor quality of feedwater
			pH	6-11 pH	10.5/8.9	Monitor alkalinity of feedwater
			Dissolved O_2	0.1-20 ppb	5/-	Monitor effectiveness of oxygen control chemical feed
			Hydrazine	0-200 ppb	-/60	Monitor residual oxygen control chemical in feedwater
			Corrosion Product Concentration	-	-	Monitor feedwater corrosion product transport
6 Main steam A, B, C, and D	985	560	Spec Cond	1-100 µS/cm	60.0/-	Monitor steam purity and carry over tendency

TABLE 9.3-5 (Sheet 2)

Sampling Point	Operating Conditions Pressure	Operating Conditions Temp. F	Analysis	Ranges	Alarm Hi/Lo	Purpose for Measurement and General Comments
7 Stm gen blowdown A, B, C, and D	1095	560	Cation Cond	0.055-10 µS/cm	1.0/-	Determine TDS in S.G. and determine blowdown rate
			pH	6-11	10.5/9.0	Minimize corrosion and deposit
			Na^+	0.1-100 ppb	5.0/-	Monitor condenser leak and its concentration Determine blowdown rate
8 Heater drain pump disch/MSR drains A, B, C, and D	392	372	Cation Cond	0.055-10 µS/cm	0.3/-	
			Corrosion Product Concentration	-	-	Monitor heater drain corrosion product transport
9 Demin wtr degasifier in/out	F125	F150	Dissolved O_2	0.1-100 ppb	75/-	Monitor effectiveness of degasifier
10 MSR Drains A,B,C and D	163	372	Spec Cond pH	1-100 µS/cm 6-11	60/- 10.5/9.3	Monitor water quality

TABLE 9.3-6

LIST OF GRAB SAMPLE POINTS
FOR PRIMARY AND RADWASTE SAMPLING SYSTEMS

Sample Point No.	Sample Name	Type of Sample	Typical Sampling Frequency
1	Pressurizer relief tank, vapor space	Noble gas	As required
2	Volume control tank, vapor space	Noble gas	As required
3	Volume control tank	Liquid	As required
4	CVCS letdown chiller heat exchanger (chill water)	Liquid	*
5	Boric acid batch tank	Liquid	As required
6	Reactor makeup water storage tank	Liquid	*
7	Steam generator blown demineralizer inlet and outlet	Liquid	*
8	Refueling water storage tank	Liquid	*
9	Fuel pool cooling heat exchangers A and B	Liquid	*
10	Component cooling water heat exchanger	Liquid	*
11	Residual heat removal pumps A and B	Liquid	*
12	Refueling water storage tank return from RHR system	Liquid	As required
13	Safety injection pump test return to refueling water storage tank	Liquid	As required
14	Boron injection surge tank	Liquid	As required
15	Boron injection tank	Liquid	As required
16	Refueling water storage tank to spray additive eductor	Liquid	As required
17	Containment spray additive tank	Liquid	*
18	Gas decay tanks A, B, C, D, E, F, and G	Noble gas	*
19	Waste evaporator condensate	Liquid	As required
20	Liquid waste charcoal absorber	Liquid	As required

*Sampling frequencies are specified within applicable chemistry procedures

TABLE 9.3-6 (Sheet 2)

Sample Point No.	Sample Name	Type of Sample	Typical Sampling Frequency
21	Waste monitor tank demineralizer inlet and outlet	Liquid	As required
22	Waste evaporator condensate demineralizer	Liquid	As required
23	Reactor coolant drain tank vapor space	Noble gas	As required
24	Waste evaporator concentrate	Liquid	As required
25	Evaporator bottom tank (primary)	Liquid	As required
26	Evaporator bottom tank (secondary)	Liquid	As required
27	Spent resin sluice filter (primary)	Liquid	As required
28	Spent resin sluice filter (secondary)	Liquid	As required
29	Recycle evaporator feed demin A and B	Liquid	As required
30	Recycle holdup tank vapor space A and B	Noble gas	As required
31	Recycle evaporator concentrate	Liquid	As required
32	Sec. liquid waste drain collection tank	Liquid	As required
33	Sec. liquid waste charcoal absorber	Liquid	As required
34	Sec. liquid waste demineralizer	Liquid	As required
35	High TDS collector tank	Liquid	As required
36	Low TDS collector tank	Liquid	As required
37	Sec. liquid waste evaporator entrainment separator rack spray water	Liquid	As required
38	Reactor containment sump	Liquid	As required
39	Laundry and hot shower charcoal absorber	Liquid	As required
40	SLW evaporator concentrates	Liquid	As required

TABLE 9.3-7

FLOOR AND EQUIPMENT DRAINAGE SYSTEM SINGLE ACTIVE FAILURE ANALYSIS

Component	Failure Position	Separation Group	Comments and Analysis
FV95	As is	1	One of two containment isolation valves. If valve fails, the other valve in separation group 4 will operate.
FV96	Closed	4	One of two containment isolation valves. If valve fails, the other valve in separation group 1 will operate.
HV105	As is	4	One of two motor-operated auxiliary building sump pump discharge isolation valves. If valve fails, the other valve in separation group 1 will operate.
HV106	As is	1	One of two motor-operated auxiliary building sump pump discharge isolation valves. If valve fails, the other valve in separation group 4 will operate.
LE102, LIT102	Anywhere in range	1	One level transmitter is provided for each RHR pump room with power supplied by the same separation group as the safety-related equipment in the associated room. If one fails, the indication system for the other pump room train will operate.
LE101, LIT101	Anywhere in range	4	One level transmitter is provided for each RHR pump room with power supplied

TABLE 9.3-7 (Sheet 2)

Component	Failure Position	Separation Group	Comments and Analysis
			by the same separation group as the safety-related equipment in the associated room. If one fails, the indication system for the other pump room train will operate.
LE103, LIT103	Anywhere in range	1	One of two auxiliary building sump level transmitter and indication systems. If one fails, the other train will operate.
LE104, LIT104	Anywhere in range	4	One of two auxiliary building sump level transmitter and indication systems. If one fails, the other train will operate.
LE105, LIT105	Anywhere in range	1	One level transmitter is provided for each diesel generator buidling sump with power supplied by the same separation group as the safety-related equipment in the associated room. If one fails, the other train will be protected by the other indication system.
LE106, LIT106	Anywhere in range	4	One level transmitter is provided for each diesel generator building sump with power supplied by the same separation group as the safety-related equipment in the associated room. If one fails, the other train will be protected by the other indication system.

TABLE 9.3-7 (Sheet 3)

Component	Failure Position	Separation Group	Comments and Analysis
LE124, LIT124	Anywhere in range	1	One of two control building basement level transmitter and indication systems. If one fails, the other train will operate.
LE125, LIT125	Anywhere in range	4	One of two control building basement level transmitter and indication systems. If one fails, the other train will operate.
LE09, LIT09	Anywhere in range	1	One of two containment normal sump level transmitter and indication systems. If one fails, the other train will operate.
LE10, LIT10	Anywhere in range	4	One of two containment normal sump level transmitter and indication systems. If one fails, the other train will operate.

TABLE 9.3-8

CHEMICAL AND VOLUME CONTROL SYSTEM DESIGN PARAMETERS

General	
Seal water supply flow rate, for four reactor coolant pumps, nominal, gpm	32
Seal water return flow rate, for four reactor coolant pumps, nominal, gpm	12
Letdown flow	
Normal, gpm	75
Maximum, gpm	120
Charging flow (excludes seal water)	
Normal, gpm	55
Maximum, gpm	100
Temperature of letdown reactor coolant entering system, F	<560
Temperature of charging flow directed to reactor coolant system, F	518
Temperature of effluent directed to boron recycle system, F	115
Centrifugal charging pump miniflow, each, gpm	60
Normal charging pump miniflow, gpm	45
Amount of 4 weight percent boric acid solution required to meet cold shutdown requirements shortly after full power operation, gal	*18,500

* Design nominal combined boric acid tank (BAT) boric solution volume.

TABLE 9.3-9

CHEMICAL AND VOLUME CONTROL SYSTEM
PRINCIPAL COMPONENT DATA SUMMARY

Normal charging Pump	
Number	1
Design pressure, psig	3,100
Design temperature,°F	300
Design flow, gpm	130
Design head, ft	5,900
Material	Austenitic stainless steel
Design code	ASME III-Class 2
Driver	
Type	Electric motor
RPM	3,600
Power supply	600 hp, 4000V, 3ϕ Non-Class IE
Seismic design	
Motor	Non-Category I
Pump	Category I (pressure boundary)
Centrifugal Charging Pumps	
Number	2
Design pressure, psig	2,800
Design temperature,°F	300
Design flow, gpm	150
Design head, ft	5,800
Material	Austenitic stainless steel
Cooling water, gpm	55
Design code	ASME III-Class 2
Driver	
Type	Electric motor
RPM	1,800
Power supply	600 hp, 4000V, 3ϕ, Class IE
Seismic design	Category I
Boric Acid Transfer Pump	
Number	2
Design pressure, psig	150
Design temperature,°F	250
Design flow, gpm	75

TABLE 9.3-9 (Sheet 2)

Design head, ft	235
Material	Austenitic stainless steel
Design code	ASME III Class 3
Driver	
Type	Electric motor
RPM	3,450
Power supply	20.8hp, 460V, 3ϕ
Seismic design	
Motor	Diesel backed/
Pump	Non-Class IE Category I

Boron Injection Makeup Pump

Number	1
Design pressure, psig	150
Design temperature,°F	250
Design flow, gpm	40
Design head, ft	233
Material	Austenitic stainless steel
Design code	MS
Seismic design	Non-Category I

Chiller Pumps

Number	2
Design pressure, psig	150
Design temperature,°F	200
Design flow, gpm	400
Design head, ft	150
Material	Carbon steel
Design code	MS
Seismic design	Non-Category I

Regenerative Heat Exchanger

Number	1
Heat transfer rate at design conditions, Btu/hr	$11\ 0 \times 10^6$

	Shell Side	Tube Side
Design pressure, psig	2,485	3,100
Design temperature,°F	650	650
Fluid	Borated reactor coolant	Borated reactor coolant
Material	Austenitic stainless steel	Austenitic stainless steel
Design code	ASME III, Class 2	ASME III Class 2
Seismic design	Category I	Category I

TABLE 9.3-9 (Sheet 3)

	Shell Side	Tube Side
Flow, lb/hr	37,300	27,300
Inlet temperature,°F	560	130
Outlet temperature,°F	290	518

Letdown Heat Exchanger

Number	1
Heat transfer rate at design conditions, Btu/hr	16.1×10^6

	Shell Side	Tube Side
Design pressure, psig	150	600
Design temperature,°F	250	400
Design flow, lbm/hr	498,000	59,600
Fluid	Component cooling water	Borated reactor coolant
Material	Carbon steel	Austenitic stainless steel
Design code	ASME III, Class 3	ASME III, Class 2
Seismic design	Category I	Category I

Excess Letdown Heat Exchanger

Number	1
Heat transfer rate at design conditions, Btu/hr	5.2×10^6

	Shell Side	Tube Side
Design pressure, psig	150	2,485
Design temperature,°F	250	650
Design flow, lb/hr	129,000	12,410
Inlet temperature,°F	105	560
Outlet temperature,°F	145	165
Fluid	Component cooling water	Borated reactor coolant
Material	Carbon steel	Austenitic stainless steel
Design code	ASME III, Class 3	ASME III, Class 2
Seismic design	Category I	Category I

Seal Water Heat Exchanger

Number	1
Heat transfer rate at design conditions, Btu/hr	2.0×10^6

TABLE 9.3-9 (Sheet 4)

	Shell Side	Tube Side
Design pressure, psig	150	220
Design temperature,°F	250	250
Design flow, lb/hr	186,000	51,900
Inlet temperature,°F	105	156
Outlet temperature,°F	121	115
Fluid	Component cooling water	Borated reactor coolant
Material	Carbon steel	Austenitic stainless steel
Design code	ASME III, Class 3	ASME III, Class 2
Seismic design	Category I	Category I
Moderating Heat Exchanger		
Number		1
Heat transfer rate at design conditions, Btu/hr		2.53×10^6
Design pressure, psig	300	300
	Shell Side	Tube Side
Design temperature,°F	200	200
Design flow, lb/hr	59,600	59,600
Design inlet temperature, boron storage mode,°F	50	115
Design outlet temperature, boron storage mode,°F	92.4	72.6
Inlet temperature, boron release mode,°F	140	115
Outlet temperature, boron release mode,°F	123.2	131.8
Material	Austenitic stainless steel	Austenitic stainless steel
Design code (1)	ASME VIII	ASME VIII
Seismic design	Non-Category I	Non-Category I
Letdown Chiller Heat Exchanger		
Number		1
Heat transfer rate at design conditions, boron storage mode, Btu/hr		1.65×10^6

TABLE 9.3-9 (Sheet 5)

	Shell Side	Tube Side
Design pressure, psig	150	300
Design temperature,°F	200	200
Design flow, boron storage mode, lb/hr	175,000	59,600
Design inlet temperature, boron storage mode,°F	39	72.6
Design outlet temperature, boron storage mode,°F	48.4	45
	Shell Side	Tube Side
Flow, boron release mode, lb/hr	175,000	59,600
Inlet temperature, boron release mode,°F	90	123.7
Outlet temperature, boron release mode,°F	99.8	94.9
Material	Carbon steel	Austenitic stainless steel
Design code (1)	ASME VIII	ASME VIII
Seismic design	Non-Category I	Non-Category I

Letdown Reheat Heat Exchanger

Number	1
Heat transfer rate at design conditions, Btu/hr	1.49×10^6

	Shell Side	Tube Side
Design pressure, psig	300	600
Design temperature,°F	200	400
Design flow, lb/hr	59,600	44,700
Inlet temperature,°F	115	280
Outlet temperature,°F	140	246.7
Material	Austenitic Stainless steel	Austenitic Stainless steel
Design code (1)	ASME VIII	ASME VIII, Class 2
Seismic design	Non-Category I	Non-Category I

Volume Control Tank

Number	1
Volume, ft3	400
Design pressure, psig	75
Design temperature,°F	250
Material	Austenitic stainless steel
Design code	ASME III, Class 2
Seismic design	Category I

TABLE 9.3-9 (Sheet 6)

Boric Acid Tanks	
Number	2
Capacity, usable, gal	24,000
Design pressure, psig	10
Design temperature,°F	200
Material	Austenitic stainless steel
Design code	ASME III, Class 3
Seismic design	Category I
Batching Tank	
Number	1
Capacity, gal	800
Design pressure	Atmospheric
vessel steam jacket, psig	
Design temperature,°F	150
(steam jacket)	400
Material	Austenitic stainless steel
Design code	ASME VIII
Seismic design	Non-Category I
Chemical Mixing Tank	
Number	1
Capacity, gal	5
Design pressure, psig	150
Design temperature,°F	200
Material	Austenitic stainless steel
Design code	ASME VIII
Seismic design	Non-Category I
Chiller Surge Tank	
Number	1
Volume, gal	500
Design pressure	Atmospheric
Design temperature,°F	200
Material	Carbon steel
Design code	ASME VIII
Seismic design	Non-Category I
Mixed Bed Demineralizers	
Number	2
Design pressure, psig	300
Design temperature,°F	250
Design flow, gpm	120
Resin volume, each, ft^3	39

TABLE 9.3-9 (Sheet 7)

Material	Austenitic stainless steel
Design code (1)	ASME VIII
Seismic design	Non-Category I
Cation Bed Demineralizers	
Number	1
Design pressure, psig	300
Design temperature,°F	250
Design flow, gpm	120
Resin volume, ft3	39
Material	Austenitic stainless steel
Design code (1)	ASME VIII
Seismic design	Non-Category I
Thermal Regeneration Demineralizers	
Number	5
Design pressure, psig	300
Design temperature,°F	250
Design flow, gpm	250
Resin volume, ft3	74.3
Material	Austenitic stainless steel
Design code (1)	ASME VIII
Seismic design	Non-Category I
Reactor Coolant Filter	
Number	1
Design pressure, psig	300
Design temperature,°F	250
Design flow, gpm	250
Particle retention	Absolute filtration program target size is .1 micron at ≥ 99.98% efficiency
Material, vessel	Austenitic stainless steel
Design code	ASME III Class 2
Seismic design	Category I
Seal Water Injection Filters	
Number	2
Design pressure, psig	3,100
Design temperature,°F	250
Design flow, gpm	80
Particle retention	Absolute filtration program target size is .1 micron at ≥ 99.98% efficiency
Material, vessel	Austenitic stainless steel
Design code	ASME III Class 2
Seismic design	Category I

TABLE 9.3-9 (Sheet 8)

Seal Water Return Filter		
Number		1
Design pressure, psig		300
Design temperature,°F		250
Design flow, gpm		250
Particle retention		Absolute filtration program target size is .1 micron at ≥ 99.98% efficiency size
Material, vessel		Austenitic stainless steel
Design code		ASME III, Class 2
Seismic design		Category I
Boric Acid Filter		
Number		1
Design pressure, psig		300
Design temperature,°F		250
Design flow, gpm		250
Particle retention		Absolute filtration program target size is .1 micron at ≥ 99.98% efficiency size
Material, vessel		Austenitic stainless steel
Design code		ASME III, Class 3
Seismic design		Category I
Letdown Orifice	45 gpm	75 gpm
Number	1	2
Design flow, lb/hr	22,200	37,300
Differential pressure at design flow, psig	1,525	1,525
Design pressure, psig	2,485	2,485
Design temperature,°F	650	650
Material	Austenitic stainless steel	Austenitic stainless steel
Design code	ASME III, Class 2	ASME III, Class 2
Seismic design	Category I	Category I
Chiller Unit		
Number		1
Capacity, Btu/hr		1.66×10^6
(ice tons)		138
Design code		MS
Seismic design		Non-Category I

TABLE 9.3-9 (Sheet 9)

Note 1 - Table indicates the required code based on its safety-related importance as dictated by service and functional requirements and by the consequences of their failure. Note that the actual equipment may be supplied to a higher principal construction code than required.

TABLE 9.3-10

FAILURE MODE AND EFFECTS ANALYSIS-CHEMICAL AND VOLUME CONTROL SYSTEM
ACTIVE COMPONENTS - NORMAL PLANT OPERATION AND SAFE SHUTDOWN

Component	Failure Mode	CVCS Operation Function	Effect on System Operation and Shutdown*	Failure Detection Method**	Remarks
1. Air diaphragm-operated globe valve LCV-459 (LCV-460 analogous)	a. Fails open	Charging and volume control - letdown flow	Failure reduces redundancy of providing letdown flow isolation to protect PRZ heaters from uncovering at low water level in the PRZ. No effect on system operation. Alternate isolation valve (LCV-460) provides back-up letdown flow isolation.	Valve position indication (open to closed position change) at CB.	Valve is designed to fail "closed" and is electrically wired so that the electrical solenoid of the air diaphragm operator is energized to open the valve. Solenoid is de-energized to close the valve upon the generation of a low level PRZ control signal. The valve is electrically interlocked with three letdown orifice isolation valves and may not be opened manually from the CB if any of these valves is at an open position.
	b. Fails closed	Charging and volume control - letdown flow	Failure blocks normal letdown flow to VCT. Minimum letdown flow requirements for boration of RCS to safe shutdown concentration level may be met by establishing letdown flow through alternate excess letdown flow path. If the alternate excess letdown flow path to VCT is not available due to a single failure (loss of instrument	Valve position indication (closed to open position change) at CB; letdown flow temperature indication (TI-127) at CB; letdown flow-pressure indication (PI-131) at CB; letdown flow indication (FI-132) at CB; and VCT level indication (LI-185) and low water level alarm at CB.	

* See list at end of table for definition of acronyms and abbreviations used.

** As part of plant operation, periodic tests, surveillance inspections and instrument calibrations are made to monitor equipment and performance. Failures may be detected during such monitoring of equipment in addition to detection methods noted.

WOLF CREEK

TABLE 9.3-10 (Sheet 2)

Component	Failure Mode	CVCS Operation Function	Effect on System Operation and Shutdown*	Failure Detection Method**	Remarks
			air supply) affecting the opening operation of valves in each flow path, the plant operator can borate the RCS to a safe shutdown concentration level without letdown flow by utilizing the steam space available in the PRZ.		
2. Air diaphram-operated globe valve LCV-8149B (LCV-8149C and 8149A analogous)	a. Fails open	Charging and volume control - letdown flow	Failure prevents isolation of normal letdown flow through regenerative heat exchanger when bringing the reactor to a cold shutdown condition after the RHRS is placed into operation. No effect on safe shutdown operation. Containment isolation valve 8152 or 8160 may be remotely closed from the CB to isolate letdown flow through the heat exchanger.	Valve position indication (open to closed position change) at CB.	Valve is of similar design as that stated for item 1. Solenoid is de-energized to close the valve upon the generation of a low water level PRZ signal or closing of letdown isolation valves LVC-459 and LCV-460 upstream of the regenerative heat exchanger.
	b. Fails closed	Charging and volume control - letdown flow	Failure blocks normal letdown flow to VCT. Normal letdown flow to VCT may be maintained by opening alternate letdown orifice isolation valve 8149C. Minimum letdown flow requirements for boration of RCS to safe shutdown concentration level may be met by opening letdown orifice isolation valve LCV-8149A or LCV-8149C. If a single failure (loss of instrument air) prevents opening of these valves the plant operator can borate the RCS to a safe shutdown concentration level without letdown flow by utilizing the steam space available in PRZ.	Same methods of detection as those stated for item 1.b.	

TABLE 9.3-10 (Sheet 3)

Component	Failure Mode	CVCS Operation Function	Effect on System Operation and Shutdown*	Failure Detection Method**	Remarks
3. Air diaphragm-operated globe valve 8152 (8160 analogous)	a. Fails closed	Charging and volume control - letdown flow	Same effect on system operation as that stated for item 1.b.	Same methods of detection as those stated for item 1.b. In addition, close position group monitoring light at CB.	Valve is of similar design as that stated for item 1. Solenoid is de-energized to close the valve upon the generation of an ESF "T" signal.
	b. Fails open	Charging and volume control - letdown flow	Failure has no effect on CVCS operation during normal plant operation and load follow. However, under accident conditions requiring containment isolation, failure reduces the redundancy of providing isolation of normal letdown line.	Valve position indication (open to closed position change) at CB.	
4. Air diaphragm-operated globe valve TCV-381B	a. Fails open	Boron concentration control - boron thermal regeneration (boration)	Failure inhibits use of BTRS for load follow operation (boration) due to low temperature of letdown flow entering BTRS demineralizers. Alternate boration of reactor coolant for load follow is possible, using RMCS of CVCS. No effect of operation to bring reactor to safe shutdown condition.	Letdown heat exchanger tube discharge flow (FI-132) and pressure (PI-131) indications at CB and BTR demineralizer inlet flow temperature indication at CB if BTRS is in operation.	1. Valve is designed to fail "open" and is electrically wired so that the electrical solenoid of the air diaphragm operator is energized to close the valve. 2. BTRS operation is not required in operations of the CVCS used to bring the reactor to hot standby condition.
	b. Fails closed	Boron concentration control - boron thermal regeneration (boration)	Failure inhibits use of BTRS for load follow operation (boration) due to loss of temperature	Same methods of detection as those stated for item 1.b, except no "closed to	

TABLE 9.3-10 (Sheet 4)

Component	Failure Mode	CVCS Operation Function	Effect on System Operation and Shutdown*	Failure Detection Method**	Remarks
			control of letdown flow entering BTRS demineralizers. Failure also blocks normal letdown flow to VCT when BTRS is not being used for load follow. Minimum letdown flow requirements for boration of RCS to hot standby concentration level may be met as stated for effect on system operation for item 1.b.	open position change" indication at CB. If BTRS is not operating, BTRS status indication (off) light at CB.	
5. Air diaphragm-operated globe valve PCV-131	a. Fails open	Charging and volume control - letdown flow	Failure prevents control of pressure to prevent flashing of letdown flow in letdown heat exchanger and also allows high pressure fluid to mixed bed demineralizers. Relief valve 8119 opens in demineralizer line to release pressure to VCT and valve TCV-129 changes position to divert flow to VCT. Boration of RCS to safe shutdown concentration level is possible with valve failing open.	Letdown heat exchanger tube discharge flow indication (FI-132) and high flow alarm at CB; temperature indication (TI-130) and high temperature alarm at CB; and pressure indication (PI-131) at CB.	1. Same remark as stated for item 4, in regard to valve design. 2. As a design transient the letdown heat exchanger is designed for complete loss of charging flow.
	b. Fails closed	Charging and volume control - letdown flow	Same effect on system operations as that stated for item 1.b.	Letdown heat exchanger discharge flow indication (FI-132), pressure indication (PI-131) and high pressure alarm at CB.	
6. Air diaphragm-operated three way valve TCV-129	a. Fails open for flow only to VCT	Charging and volume control - letdown flow	Letdown flow bypassed from flowing to mixed bed demineralizers and BTRS. Failure prevents ionic purification of letdown flow and inhibits operation of BTRS.	Valve position indication (VCT) at CB and RCS activity level when sampling letdown flow.	1. Electrical solenoid of air diaphragm operator is electrically wired so that solenoid is energized to

TABLE 9.3-10 (Sheet 5)

Component	Failure Mode	CVCS Operation Function	Effect on System Operation and Shutdown*	Failure Detection Method**	Remarks
			Boration of RCS to safe shutdown concentration level is possible with valve failing open for flow only to VCT.		open valve for flow to the mixed bed demineralizers. Valve opens for flow to VCT on "high letdown temperature" or on "high letdown reheat heat exchanger outlet temperature." 2. Technical Specifications provide a limit on RCS activity.
	b. Fails open for flow only to mixed bed demineralizer	Charging and volume control - letdown flow	Continuous letdown to mixed bed demineralizers and BTRS. Failure prevents automatic isolation of mixed bed demineralizers and BTRS under fault condition of high letdown flow temperatures. These systems may be manually isolated, using local valves 8524A and 8524B at mixed bed demineralizers. Boration of RCS to safe shutdown concentration level is possible with valve failing open for flow only to demineralizer.	Valve position indication (demineralizer) at CB. If BTRS is in operation, BTR demineralizer return flow indication (FI-385) indicating flow during an alarm condition of high letdown reheat heat exchanger outlet temperature or high letdown temperature.	
7. Air diaphragm-operated diaphragm valve 7054	Fails closed	Boron concentration control - boron thermal regeneration or storage	Failure inhibits use of BTRS for load follow operation (boration or dilution) due to flow isolation of the BTRS. Alternate boration or dilution of reactor coolant for load follow may be accomplished using RMCS of CVCS. No effect	Valve position indication (closed to open position change) at CB; BTRS operation indication (borate or dilute) at CB and BTR demineralizer return flow indication (FI-385) and inlet flow temperature	1. Valve is designed to fail "closed" and is electrically wired so that the electrical solenoid of air diaphragm operator is energized to

TABLE 9.3-10 (Sheet 6)

Component	Failure Mode	CVCS Operation Function	Effect on System Operation and Shutdown*	Failure Detection Method**	Remarks
			on operation to bring reactor to safe shutdown condition.	indication at CB.	open the valve. 2. BTRS not required to bring reactor to safe shutdown condition.
8. Air diaphragm-operated diaphragm valve 7002A	a. Fails closed	Boron concentration control - boron storage	Failure inhibits use of BTRS for load follow operation (dilution) due to flow isolation of letdown chiller heat exchanger. Alternate dilution of reactor coolant for load follow may be accomplished using RMCS of CVCS. No effect on operations to bring reactor to safe shutdown condition.	BTRS operation indication (dilute) at CB; letdown reheat heat exchanger outlet temperature at CB; and RCS boron level when sampling letdown flow.	Same remarks as those stated for item 7.
	b. Fails open	Boron concentration control - boron thermal regeneration	Failure inhibits use of BTRS for load follow operation (boration) due to flow through letdown chiller heat exchanger. Alternate boration of reactor coolant for load follow may be accomplished using RMCS of CVCs. No effect on operation to bring reactor to safe shutdown condition.	BTRS operation indication (boration) at CB; BTRS return flow temperature indication at CB; BTR return flow indication at CB; and RCS boron level when sampling letdown flow.	
9. Air diaphragm-operated diaphragm valve 7002B	a. Fails closed	Boron concentration control - boron storage	Same effect on system operation as that stated for item 8.a.	Same methods of detection as those stated for item 8.a.	Same remarks as those stated for item 7.
	b. Fails open	Boron concentration control - boron thermal regeneration	Failure inhibits use of BTRS for load follow operation (boration) due to bypass of letdown flow from letdown reheat heat exchanger. Alternate boration of reactor coolant may	Same methods of detection as those stated for item 8.b.	

TABLE 9.3-10 (Sheet 7)

Component	Failure Mode	CVCS Operation Function	Effect on System Operation and Shutdown*	Failure Detection Method**	Remarks
			be accomplished, using RMCS of CVCS. No effect on operation to bring reactor to safe shutdown condition.		
10. Relief valve 8117	Fails open	Charging and volume control - letdown flow	Letdown flow is relieved to pressurizer relief tank. Failure inhibits use of demineralizers for reactor coolant purification and use of BTRS. Normal letdown line can be isolated and minimum letdown flow requirements for hot standby may be met by establishing letdown flow through alternate excess letdown flow path.	High temperature relief line indication (TI-125) and alarm at CB and VCT level indication (LI-185) and low level alarm at CB.	Radioactive fluid contained.
11. Relief valve 8119	Fails open	Charging and volume control - letdown flow	Letdown flow is relieved to VCT. Failure inhibits use of demineralizers for reactor coolant purification and use of BTRS. Normal letdown line can be isolated and minimum letdown flow requirement for hot standby may be met by establishing flow through alternate excess letdown flow path.	RCS activity level when sampling letdown flow. When BTRS is operating, low BTR demineralizer return flow indication at CB.	Radioactive fluid contained.
12. Air diaphragm-operated diaphragm valve 8245	a. Fails closed	Boron concentration control - boron thermal regeneration or storage	Normal purification of reactor coolant using only mixed bed demineralizers cannot be performed. Failure also blocks normal letdown flow. Boration of RCS to safe shutdown concentration level may be met as stated for effect on system operation for item 1.b.	BTRS operation indication (off) at CB and RCS activity level when sampling letdown flow. Valve position indication (closed to open position change) at CB.	Same remarks as those stated for item 4.

TABLE 9.3-10 (Sheet 8)

Component	Failure Mode	CVCS Operation Function	Effect on System Operation and Shutdown*	Failure Detection Method**	Remarks
	b. Fails open	Boron concentration control - boron thermal regeneration or storage	Failure inhibits use of BTRS for load follow operation (boration or dilution) due to bypass of letdown flow from BTRS. Alternate boration or dilution of reactor coolant for load follow may be accomplished using RMCS of CVCS. No effect on operations to bring reactor to hot standby condition.	RCS boron level when sampling letdown flow. If BTRS is operating, BTRS operating indication (borate or dilute) at CB and low BTR demineralizer return flow indication at CB. Valve position indication (open to closed position change) at CB.	
13. Air diaphragm-operated diaphragm valve 7056 (7045 analogous)	a. Fails closed	Boron concentration control - boron storage	Failure inhibits use of BTRS for load follow operation (dilution) due to flow isolation of BTR demineralizers. Alternate dilution of reactor coolant for load follow may be accomplished, using RMCS of CVCS. No effect on operations to bring reactor to safe shutdown condition.	RCS boron level when sampling letdown flow. If BTRS is operating, BTRS operation indication (dilute) at CB and low BTR demineralizer return flow indication at CB.	See remarks as those stated for item 7.
	b. Fails open	Boron concentration control - boron thermal regeneration	Failure inhibits use of BTRS for load follow operation (boration) due to flow bypass of BTR demineralizers. Alternate boration of reactor coolant for load follow may be accomplished using RMCS of CVCS. No effect on operations to bring reactor to safe shutdown condition.	RCS boron level when sampling letdown flow. If BTRS is operating, BTRS operation indication (borate) at CB.	
14. Air diaphragm-operated diaphragm valve 7057 (7046 analogous)	a. Fails open	Boron concentration control - boron storage	Failure inhibits use of BTRS for load follow operation (dilution) due to flow bypass of BTR demineralizers. Alternate dilution of reactor coolant for load follow may be accomplished using RMCS of CVCS. No effect on operations to bring reactor to safe shutdown condition.	RCS boron level when sampling letdown flow. If BTRS is operating, BTRS operation indication (dilute) at CB.	Same remarks as those stated for item 4.

TABLE 9.3-10 (Sheet 9)

Component	Failure Mode	CVCS Operation Function	Effect on System Operation and Shutdown*	Failure Detection Method**	Remarks
	b. Fails closed	Boron concentration control - boron thermal regeneration	Failure inhibits use of BTRS for load follow operation (boration) due to flow isolation of BTR demineralizers. Alternate boration of reactor coolant for load follow may be accomplished, using RMCS of CVCS. No effect on operations to bring reactor to safe shutdown condition.	RCS boron level when sampling letdown flow. If BTRS is operating, BTRS operation indication (borate) at CB and low BTR demineralizer return flow indication at CB.	
15. Air diaphragm-operated diaphragm valve 7040	a. Fails open	Boron concentration control - boron storage	Same effect on system operation as that stated for item 14.a.	Same methods of detection as those stated for item 14.a.	Same remarks as those stated for item 4.
	b. Fails closed	Boron concentration control - boron thermal regeneration	Failure inhibits use of BTRS for load follow operation (boration) due to blockage of return letdown flow from letdown chiller heat exchanger. Alternate boration of reactor coolant for load follow may be accomplished, using RMCS of CVCS. No effect on operations to bring reactor to hot standby condition.	Same metods of detection as those stated for item 14.b.	
16. Air diaphragm-operated diaphragm valve 7041	a. Fails open	Boron concentration control - boron storage	Failure inhibits use of BTRS for load follow operation (dilution) due to flow bypass of letdown chiller heat exchanger. Alternate dilution of reactor coolant for load follow may be accomplished, using RMCS of CVCS. No effect on operation to bring reactor to safe shutdown condition.	RCS boron level when sampling letdown flow. If BTRS is operating, BTRS operation indication (dilute) at CB and letdown reheat heat exchanger outlet temperature indication at CB.	Same remarks as those stated for item 4.

TABLE 9.3-10 (Sheet 10)

Component	Failure Mode	CVCS Operation Function	Effect on System Operation and Shutdown*	Failure Detection Method**	Remarks
	b. Fails closed	Boron concentration control - boron thermal regeneration	Failure inhibits use of BTRS for load follow operation (boration) due to flow isolation of letdown reheat heat exchanger and BTR demineralizers. Alternate boration of reactor coolant for load follow may be accomplished using RMCS of CVCS. No effect on operation to bring reactor to safe shutdown condition.	Same methods of detection as those stated for item 14.b.	
17. Air diaphragm-operated diaphragm valve 7022	a. Fails closed	Boron concentration control - boron storage	Failure inhibits use of BTRS for load follow operation (dilution) due to flow blockage of return letdown flow from moderating heat exchanger. Alternate dilution of reactor coolant for load follow may be accomplished, using RMCS of CVCS. No effect on operation to bring reactor to safe shutdown condition.	RCS boron level when sampling letdown flow. If BTRS is operating, BTRS operation indication (dilute) at CB and low BTR demineralizer return flow indication at CB.	Same remarks as those stated for item 7.
	b. Fails open	Boron concentration control - boron thermal regeneration	Failure inhibits use of BTRS for load follow operation (boration) due to bypass of flow from letdown chiller heat exchanger of return letdown flow. Alternate boration of reactor coolant for load follow may be accomplished, using RMCS of CVCS. No effect on operation to bring reactor to safe shutdown condition.	RCS boron level when sampling letdown flow. If BTRS is operating, BTRS operate indication (borate) at CB and BTRS return flow temperature indication and high temperature alarm at CB.	
18. Air diaphragm-operated butterfly valve TCV-386	Fails closed	Boron concentration control - boron thermal regeneration and storage	Failure inhibits use of BTRS for load follow operation (boration and dilution) due to flow blockage of chiller flow through letdown chiller heat exchanger. Alternate boration and dilution of reactor coolant for load	RCS boron level when sampling letdown flow. If BTRS is operating, BTRS return flow temperature indication and high temperature alarm at CB; and chiller surge	1. Valve is designed to fail "closed." 2. BTRS not used to bring the reactor to safe shutdown condition.

TABLE 9.3-10 (Sheet 11)

Component	Failure Mode	CVCS Operation Function	Effect on System Operation and Shutdown*	Failure Detection Method**	Remarks
			follow may be accomplished, using RMCS of CVCS. No effect on operations to bring reactor to safe shutdown condition.	tank temperature indication at CB.	
19. Air diaphragm-operated butterfly valve FCV-375	Fails open	Boron concentration control - boron thermal regeneration and storage	Failure inhibits use of BTRS for load follow operation (boration and dilution) due to flow bypass of chiller flow from letdown chiller heat exchanger. Alternate boration and dilution of reactor coolant for load follow may be accomplished, using RMCS of CVCS. No effect on operations to bring reactor to safe shutdown condition.	RCS boron level when sampling letdown flow. If BTRS is operating, BTRS return flow temperature indication and high temperature alarm at CB and chiller surge tank temperature indication at CB.	1. Valve is designed to fail "open." 2. BTRS not used to bring the reactor to safe shutdown condition.
20. Chiller unit, AHCU	Fails to cool liquid	Boron concentration control - boron thermal regeneration and storage	Failure inhibits use of BTRS for load follow operation (boration and dilution) due to loss of cooling capability of letdown chiller heat exchanger. Alternate boration and dilution of reactor coolant for load follow may be accomplished, using RMCS of CVCS. No effect on operations to bring reactor to hot standby condition.	Same methods of detection as those stated for item 19. In addition, BTRS operation indication (borate or dilute) at CB.	BTRS not used to bring the reactor to safe shutdown condition.
21. Chiller pump 1, APCI (pump 2 analogous)	Fails to deliver working fluid	Boron concentration control - boron thermal regeneration and storage	No effect on BTRS operation. Redundant chiller pump 2 provides necessary delivery of working fluid for chiller unit operation. BTRS not required in operations to bring reactor to hot standby condition.	Local pump discharge flow pressure indication (PI-377A) and MCC contactor position indication (open) at CB.	Both chiller pumps operate simultaneously during BTRS operation.
22. Air diaphragm operated diaphragm valve 7002A (7002B analogous)	a. Fails closed	Boron concentration control - boron thermal regeneration and storage	Failure inhibits use of BTRS for load follow operation (boration) due	RCS boron level when sampling letdown flow. If BTRS is	Same remarks as those stated for item 7.

TABLE 9.3-10 (Sheet 12)

Component	Failure Mode	CVCS Operation Function	Effect on System Operation and Shutdown*	Failure Detection Method**	Remarks
			to flow isolation of shell side of letdown reheat heat exchanger. Alternate boration of reactor coolant for load follow may be accomplished using RMCS of CVCS. No effect on operations to bring reactor to safe shutdown condition.	operating, letdown reheat heat exchanger outlet temperature indication at CB.	
	b. Fails open	Boron concentration control - boron storage	Failure inhibits use of BTRS for load follow operation (dilution) due to passage of CVCS letdown flow through tube side of letdown reheat heat exchanger. Alternate dilution of reactor coolant may be accomplished using RMCS of CVCS. No effect on operations to bring reactor to safe shutdown condition.	RCS boron level when sampling letdown flow. If BTRS is operating, letdown reheat heat exchanger outlet temperature indication at C.B.	
23. Solenoid-operated globe valve 8153A (8154A analogous; 8153B and 8154B similar)	a. Fails closed	Charging and volume control - letdown flow	Failure reduces redundancy of the excess letdown fluid system of the CVCS as an alternate system that may be used for letdown flow control during normal plant operation and reduces redundancy of the excess letdown system to control water level in the pressurizer of the RCS during final stage of plant startup due to flow blockage.	Valve open/closed position indication at CB; letdown high temperature indication and alarm at CB.	1. If normal letdown and excess flow is not available for safe shutdown operations,plant operator can borate RCS to safe shutdown concentration, using steam space available in PRZ.
	b. Fails open	Charging and volume control - letdown flow	Failure reduces redundancy of providing excess	Valve position indication (open to	

TABLE 9.3-10 (Sheet 13)

Component	Failure Mode	CVCS Operation Function	Effect on System Operation and Shutdown*	Failure Detection Method**	Remarks
			letdown flow isolation during normal plant operation and for plant startup. No effect on system operation. Alternate isolation valves closed to provide back-up flow isolation of excess letdown line.	closed position change) at CB.	
24. Air diaphragm-operated globe valve HCV-123	a. Fails closed	Charging and volume control - letdown flow	Same effect on system operation as that stated for item 23.a. Redundant valves 8157A or 8157B may be opened to provide a path to the PRT.	Same methods of detection as those stated for item 23.a,	Same remarks as those stated for item 23 except for valve position indication at CB.
	b. Fails open	Charging and volume control - letdown flow	Failure prevents manual adjustment at CB of RCS pressure downstream of excess letdown heat exchanger to a low pressure consistent with number 1 seal leakoff back-pressure requirements. When using excess letdown system, failure leads to a decrease in seal water pump shaft flow for cooling pump bearings.	Excess letdown heat exchanger outlet pressure indication (PI-124) at CB, and seal water return flow recording (FR-156) and low flow alarm at CB.	
25. Air disphragm-operated diaphragm valve LCV-181 (LCV-178, LCV-179 and LCV-180 analogous)	a. Fails closed	Charging and volume control - seal water flow	No automatic makeup of seal water to seal standpipe that services number 3 seal of RC pump 1. No effect on operations to bring the reactor to safe shutdown condition.	Valve position indication (closed to open position change) and low standpipe level alarm at CB.	1. Same remark as that stated for item 7 in regard to valve design. 2. Low level standpipe alarm conservatively set to allow additional time for RC pump operation without a complete loss of seal water from being injected to number 3 seal after sounding of alarm.

TABLE 9.3-10 (Sheet 14)

Component	Failure Mode	CVCS Operation Function	Effect on System Operation and Shutdown*	Failure Detection Method**	Remarks
	b. Fails open	Charging and volume control - seal water flow	Overfill of seal water standpipe and dumping of reactor makeup water to containment sump during automatic makeup of water for number 3 seal of RC pump 1. No effect on operations to bring reactor to safe shutdown condition.	Valve position indication (open to closed position change) and high standpipe level alarm at CB.	
26. Relief valve 8121	Fails open	Charging and volume control - seal water flow	RC pump seal water return flow and normal excess letdown flow bypassed to PRZ relief tank of RCS. Failure inhibits use of the excess letdown fluid system of the CVCS as an alternate system that may be used for letdown flow control during normal plant operation and inhibits use of normal excess letdown system to control water level in the PRZ of the RCS during final stage of a plant startup.	Decrease in VCT level, causing RMCS of CVCS to operate.	1. The capacity of the relief valve equals maximum flow from four RC pump seals plus normal excess letdown flow. 2. Radioactive fluid contained. 3. Same remark as that stated for item 23 (#2).
27. Motor-operated globe valve 8112 (8100 analogous)	a. Fails open	Charging and volume control - seal water flow and excess letdown flow	Failure has no effect on CVCS operation during normal plant operation and load follow. However, under accident conditions requiring containment isolation, failure reduces redundancy of providing isolation of seal water flow and normal excess letdown flow.	Valve position indication (open to closed position change) at CB.	1. Valve is normally at a full open position, and motor operator is energized to close the valve upon the generation of an ESF "T" signal. 2. If normal letdown and normal excess letdown flow is not available for safe shutdown operation, plant operator can borate RCS to safe shutdown concentration, using steam space available in PRZ and excess

TABLE 9.3-10 (Sheet 15)

Component	Failure Mode	CVCS Operation Function	Effect on System Operation and Shutdown*	Failure Detection Method**	Remarks
					letdown path to PRT.
	b. Fails closed	Charging and volume control - seal water flow and excess letdown flow	RC pump seal water return flow and normal excess letdown flow blocked. Failure inhibits use of the normal excess letdown fluid system of the CVCS as an alternate system that may be used for letdown flow control during normal plant operation. However, excess letdown path to PRT will be available along with increased steam space in PRZ. Also degrades cooling capability of seal water in cooling RC pump bearings. CCW should be established to the seals and seal injection terminated. This minimizes water loss to PRT via relief valve 8121. Valve 8121 will continue to pass seal leakage to PRT (5 gpm per seal) until the RCS pressure is reduced.	Valve position indication (closed to open position change) at CB; group monitoring light at CB; and seal water return flow recording (FR-157) and low seal water return flow alarm at CB.	
28. Motor-operated gate valve 8105 (8106 analogous)	a. Fails open	Charging and volume control - charging flow	Failure has no effect on CVCS operation during normal plant operation and load follow. However, under accident conditions requiring isolation of charging line, failure reduces redundancy of providing isolation of normal charging flow.	Valve position indication (open to closed position change) at CB.	Valve is normally at a full open position, and motor operator is energized to close the valve upon the generation of a safety injection "S" signal.
	b. Fails closed	Charging and volume control - charging flow	Failure inhibits use of normal charging line to RCS for boration, dilution, and coolant makeup operations. Seal water injection and BIT paths remain available for boration of RCS to a safe shutdown concentration level and makeup of coolant during operations to bring the reactor to safe shutdown condition.	Valve position indication (closed to open position change) and group monitoring light (valve closed) at CB; letdown temperature indication (TI-127) and high temperature alarm at CB; charging flow temperature indication (TI-126) at CB; seal water flow pressure indication (PI-120A) at	

TABLE 9.3-10 (Sheet 16)

Component	Failure Mode	CVCS Operation Function	Effect on System Operation and Shutdown*	Failure Detection Method**	Remarks
				CB; VCT level indication (LI-185) and high level alarm at CB.	
29. Air diaphragm-operated globe valve HCV-182	a. Fails open	Charging and volume control - charging flow and seal water flow	Failure prevents manual adjustment at CB of seal water flow through the control of backpressure in charging header, resulting in a reduction of flow to RC pump seals leading to a reduction in flow to RCS via labyrinth seals and pump shaft flow for cooling pump bearings. Boration of RCS to a safe shutdown concentration level and makeup of coolant during operations to bring reactor to safe shutdown condition is still possible through normal charging flow path or BIT path.	Seal water flow pressure indication (PI-120A) at CB; seal water return recording (FR-157); and low seal water return flow alarm at CB.	Same remark as that stated for item 4 in regard to design of valve.
	b. Fails closed	Charging and volume control - charging flow	Same effect on system operation as that stated for item 28.b.	Same methods of detection as those stated for item 28.b.	
30. Motor-operated globe valve 8110 (8111) analogous)	a. Fails open	Charging and volume control - charging flow and seal water flow	Failure has no effect on CVCS operation during normal plant operation and load follow. However, under accident conditions requiring isolation of centrifugal charging pump miniflow line to suction of pumps via seal water heat exchanger, failure results in reduction of delivered flow for one 100 percent train only.	Valve position indication (open to closed position change) at CB.	1. Same remarks as those stated for item 28.

TABLE 9.3-10 (Sheet 17)

Component	Failure Mode	CVCS Operation Function	Effect on System Operation and Shutdown*	Failure Detection Method**	Remarks
	b. Fails closed	Charging and volume control - charging flow and seal water flow	Failure blocks miniflow to suction of centrifugal charging pumps via seal water heat exchanger. Normal charging flow and seal water flow prevents deadheading of pumps when used. Boration of RCS to a safe shutdown concentration level and makeup of coolant during operations to bring reactor to safe shutdown condition is accomplished by the opposite train which provides 100 percent of the flow requirements.	Valve position indication (closed to open position change) at CB; group monitoring light (valve closed) and alarm at CB; and charging and seal water flow indication (FI-121A) and high flow alarm at CB.	
31. Air diaphragm-operated globe valve 8146	a. Fails open	Charging and volume control - charging flow	Failure has no effect on CVCS operation during normal plant operation, load follow and safe shutdown operation. BG HV-8147 can be removed from service, if required, since only one return path is required. In the event that auxiliary spray is being used to cooldown the PZR, the charging return flow path is isolated to maximize auxiliary spray flow. Cold shutdown of the reactor is still possible; however, time for cooling down the PZR will be extended.	Valve position indication (open to closed position change) at CB.	Same remark as that stated for item 4 in regard to design of valve.
	b. Fails closed	Charging and volume control - charging flow	Isolates one of the two available charging return flow paths to the RCS. BG HV-8146 and BG HV-8147 are both charging returns to the RCS. BG HV-8147 can be placed in-service, if required. No effect on CVCS operations during normal plant operation, load following or safe shutdown operation.	Valve position indication (closed to open position change) at CB; charging flow indication (TI-126) at CB; regenerative heat exchanger shell side exit temperature indication (TI-127) and high temperature alarm at CB; and charging and seal water flow indication (FI-121A) and low flow alarm at CB.	

TABLE 9.3-10 (Sheet 18)

Component	Failure Mode	CVCS Operation Function	Effect on System Operation and Shutdown*	Failure Detection Method**	Remarks
32. Air diaphragm-operated globe valve 8147	a. Fails closed	Charging and volume control - charging flow	Isolates one of the two available charging return flow paths to the RCS. BG HV-8146 and BG HV-8147 are both charging returns to the RCS. BG HV-8146 can be placed in-service, if required. No effect on CVCS operations during normal plant operation, load following or safe shutdown operation.	Valve position indication (closed to open position change) at CB.	Same remark as that stated for item 4 in regard to design of valve.
	b. Fails open	Charging and volume control - charging flow	Failure has no effect on CVCS operation during normal plant operation, load follow and safe shutdown operation. BG HV-8146 can be removed from service, if required, since only one return path is required. In the event that auxiliary spray is being used to cooldown the PZR, the charging return flow path is isolated to maximize auxiliary spray flow. Cold shutdown of the reactor is still possible; however, time for cooling down the PZR will be extended.	Valve position indication (open to closed position change) at CB.	
33. Air diaphragm-operated globe valve 8145	a. Fails open	Charging and volume control - charging flow	Failure results in inadvertent operation of auxiliary spray that results in a reduction of PRZ pressure during normal plant operation and load follow. PRZ heaters operate to maintain required PRZ pressure. Boration of RCS to a safe shutdown concentration level and makeup of coolant during operation to bring reactor to a safe shutdown condition is still possible.	Valve position indication (open to closed position change) at CB and PRZ pressure recording (PR-455) and low pressure alarm at CB.	Same remark as that stated for item 7 in regard to design of valve.
	b. Fails closed	Charging and volume control - charging flow	Failure has no effect on CVCS operation during normal plant operation, load follow, and safe shutdown operation. Valve is used during cold shutdown operation to active auxiliary spray for cooling down the PRZ after operation of RHRS.	Valve position indication (closed to open position change) at CB.	
34. Relief valve 8123	Fails open	Charging and volume control - charging flow	Failure results in a portion of seal water return flow and centrifugal charging pump miniflow being bypassed to VCT. Boration of RCS to a safe shutdown concentration level and makeup of coolant during operations to bring reactor to safe shutdown condition is still possible.	Local pressure indication (PI-118 and PI-119) in discharge line of centrifugal charging pumps.	Radioactive fluid contained.

TABLE 9.3-10 (Sheet 19)

Component	Failure Mode	CVCS Operation Function	Effect on System Operation and Shutdown*	Failure Detection Method**	Remarks
35. Motor operated globe valve HV-8109	Fails open	Charging & volume control - charging flow and seal water flow	Failure results in portion of charging and seal water flow from normal charging pump being bypassed to the seal water heat exchanger. No effect on normal plant operation load follow, or bringing reactor to safe shutdown condition. Normal charging pump may be taken out of service, and an alternate centrifugal charging pump used for delivery of charging and seal water flow.	Local charging and seal water flow indication (FI-121A) and pressure indication (PI-186 & PI-463)	Normal pump may be isolated by closing of manual isolation valves in pump discharge and suction lines.
	Fails Closed		Failure results in loss of minimum recirculation flow for normal charging pump, loss of pump protection for abnormal operating conditions. No effect on normal plant operation, load follow, or bringing reactor to safe shutdown condition. Normal charging pump may be taken out of service, and an alternate centrifugal charging pump used for delivery of charging and seal water flow.	Same as that for fail open case	Same as that for fail open case
36. Air diaphragm-operated globe valve FCV-121 (FCV-462 analogous)	a. Fails open	Charging and volume control - charging flow and seal water flow	Failure reduces redundancy of providing charging and seal water flow to RCS. No effect on normal plant operation, load follow, or bringing reactor to safe shutdown condition. Normal charging pump normally used for delivery of charging and seal water flow to RCS. Check valves 8481A and 8481B provide isolation of normal charging pump flow to discharge of centrifugal charging pump if valve fails "open" during operation of normal charging pump.	Charging and seal water flow indication (FI-121A) and high flow alarm at CB, and PRZ level recording (LR-459) and high level alarm at CB.	1. Same remark as that stated for item 4 in regard to design of valve. 2. Methods of detection apply when a standby centrifugal charging pump is in operation
	b. Fails closed	Charging and volume control - charging flow and seal water flow	Failure reduces redundancy of providing charging and seal water flow to RCS.	Charging and seal water flow indication (FI-121A) and low flow alarm at CB, and PRZ level recording (LR-459)	

TABLE 9.3-10 (Sheet 20)

Component	Failure Mode	CVCS Operation Function	Effect on System Operation and Shutdown*	Failure Detection Method**	Remarks
			No effect on system operation during normal plant operation load follow, or bringing reactor to safe shutdown condition. Normal charging pump normally used for delivery of charging and seal water flow to RCS.	and low level alarm at CB.	
36a. Motor-operated globe valve 8357A (8357B analogous)	Fails closed	Charging and volume control - alternate seal water flow	Failure reduces redundancy of providing seal water flow during accident conditions. No effect on safety for system operation. Seal water flow under an accident condition is provided by alternate flow path through valve 8357B (8357A).	Valve position indication (ZI-8357A, B) at CB; seal water flow indication (FK-215A, B) at CB; seal water return recording (FR-157); and low seal water return flow alarm (FAL-154).	
37. Check valve 8497	Fails open	Charging and volume control - charging flow and seal water flow	Failure reduces redundancy of providing charging and seal water to RCS. Discharge of normal charging pump remains open to "back-flow" when a centrifugal charging pump is placed into operation. No effect on normal plant operation, load follow, or bringing reactor to safe shutdown condition; normal charging pump normally used for delivery of charging and seal water flow.	Charging and seal water flow indication (FI-121A) and low flow alarm at CB, and PRZ level recording (LR-459) and low level alarm at CB.	1. Normal charging may be isolated by the closing of manual valves in pump's suction and discharge lines. 2. Methods of detection apply when centrifugal charging pump 1 is in operation.
38. Check valve 8481A (8481B analogous)	Fails open	Charging and volume control - charging flow and seal water flow	Failure reduces redundancy of providing charging and seal water flow to RCS. Discharge of centrifugal charging pump 1 is open to "back-flow" when centrifugal charging pump 2 is placed into operation after failure of centrifugal charging pump 1 to deliver charging and seal water flow. No effect on normal plant operation, load follow, or bringing reactor to safe shutdown condition; normal charging pump normally used for delivery of charging and seal water flow.	Same methods of detection as those stated for item 37.	1. Centrifugal charging pump 1 may be isolated by the closing of manual valves in pump's suction and discharge lines. 2. Methods of detection apply when centrifugal charging pump 2 is in operation.

TABLE 9.3-10 (Sheet 21)

Component	Failure Mode	CVCS Operation Function	Effect on System Operation and Shutdown*	Failure Detection Method**	Remarks
39. Normal charging pump	Fails to deliver working fluid	Charging and volume control - charging flow and seal water flow	Failure reduces redundancy of providing charging and seal water flow to RCS. No effect on normal plant operation, load follow, or bringing reactor to safe shutdown condition. Centrifugal charging pumps (1 and 2) are placed into operation for delivery of charging and seal water flow.	Pump circuit breaker position indication (open) at CB; common pump breaker trip alarm at CB; charging and seal water flow indication (FI-121A) and low flow alarm at CB; and PRZ level recording (LR-459) and low level alarm at CB.	Flow rate is controlled by a modulating valve (FCV-462) in discharge header for the normal charging pump.
40. Centrifugal charging pump, 1, APCH (pump 2 analogous)	Fails to deliver working fluid	Charging and volume control - charging flow and seal water flow	Failure reduces redundancy of providing charging and seal water flow to RCS. Alternate delivery of charging and seal water flow by redundant certrifugal charging pump 2 (pump 1) is available. No effect on normal plant operation, load follow or bringing reactor to safe shutdown condition. Normal charging pump normally used for delivery of charging and seal water flow.	Same methods of detection as those stated for item 39 when centrifugal charging pump 1 is in operation.	Flow rate for a centrifugal charging pump is controlled by a modulating valve (FCV-121) in discharge header for the centrifugal charging pumps.
41. Air diaphragm-operated globe valve 8156	Fails closed	Chemical control, purification, and makeup - oxygen control	Failure blocks hydrogen flow to VCT and leads to loss of venting of VCT (vent line PCV-115 closes on low VCT pressure), resulting in loss of gas stripping of fission products from RCS coolant. No effect on operation to bring the reactor to safe shutdown condition.	VCT pressure indication (PI-115) and low pressure alarm at CB. Periodic sampling of gas mixture in VCT.	1. Valve is designed to fail "closed." 2. Plant Technical Specifications set limits on RCS activity level.
42. Relief valve 8120	Fails open	Charging and volume control - charging flow and seal water flow	Failure allows VCT liquid to be released to BRS recycle holdup tank, resulting in a loss of VCT	Decrease in VCT level, causing RMCS to operate; VCT level indication	Radioactive fluid contained.

TABLE 9.3-10 (Sheet 22)

Component	Failure Mode	CVCS Operation Function	Effect on System Operation and Shutdown*	Failure Detection Method**	Remarks
			liquid and makeup coolant available for charging and seal water flow during normal plant operation, load follow, and brining the reactor to a safe shutdown condition. VCT isolation valves 112B and LCV-112C close on low-low tank level signal, causing the suction of charging pumps to be transferred to the RWST for an alternate supply of borated coolant.	(LI-185) and low level alarm at CB; and BRS recycle holdup tank level increase.	
43. Motor-operated gate valve LCV-112B (LCV-112C analogous)	a. Fails open	Charging and volume control - charging flow and seal water flow	Failure has no effect on CVCS operation during normal plant operation, load follow, and bringing reactor to a safe shutdown condition. However, under accident conditions requiring isolation of VCT, failure reduces redundancy of providing isolation for discharge line of VCT.	Valve position indication (open to closed position change) at CB.	During normal plant operation and load follow, valve is at a full open position and motor operator is energized to close the valve upon the generation of a VCT low-low level signal or upon the generation of safety injection "S" signal.
	b. Fails closed	Charging and volume control - charging flow and seal water flow	Failure blocks fluid flow from VCT during normal plant operation, load follow, and when bringing the reactor to a safe shutdown condition. Alternate supply of borated coolant from the RWST to suction of charging pumps can be established from the CB by the operator through the opening of RWST isolation valves LCV-112D and LCV-112E.	Valve position indication (closed to open position change) at CB; group monitoring light and alarm (valve closed) at CB; charging and seal water flow indication (FI-121A) and low flow alarm at CB; and PRZ level recording (LR-459) and low level alarm at CB.	

TABLE 9.3-10 (Sheet 23)

Component	Failure Mode	CVCS Operation Function	Effect on System Operation and Shutdown*	Failure Detection Method**	Remarks
44. Air diaphragm-operated diaphragm valve PCV-115	Fails closed	Chemical control, purification, and makeup - oxygen control	Failure blocks venting of VCT gas mixture to gas waste processing sytem (waste gas compressors) for stripping of fission products from RCS coolant during normal plant operation and load follow. No effect on operations to bring the reactor to safe shutdown condition.	Valve position indication (closed to open position change) at CB and VCT pressure indication (PI-115) at CB. Periodic sampling of gas mixture in VCT.	1. Same remark as that stated for item 7 in regard to valve design. 2. Same remark as that stated for item 41 in regard to RCS activity.
45. Air diaphragm-operated diaphragm valve FCV-110B	Fails closed	Boron concentration control - reactor makeup control, boration, automatic makeup, and alternate dilution.	Failure blocks fluid flow from reactor makeup control system for automatic boric acid addition and reactor water makeup during normal plant operation and load follow. Failure also reduces redundancy of fluid flow paths for dilution of RC by reactor makeup water and blocks fluid flow for boration of the RC when bringing the reactor to a safe shutdown condition. Boration (at BA tank boron concentration level) of RCS coolant to bring the reactor to safe shutdown condition may be possible by opening alternate BA tank isolation valve 8104 at CB.	Valve position indication (closed to open position change) at CB; total makeup flow deviation alarm at CB; and VCT level indication (LI-185) and low level alarm at CB.	Same remark as that stated for item 7 in regard to valve design.
	b. Fails open	Boron concentration control - reactor makeup control, boration, automatic makeup, and alternate dilution	Failure allows for alternate dilute mode type operation for system operation of normal dilution of RCS coolant. No effect on CVCS operation during normal plant operation and load follow and when bringing the reactor to a safe shutdown condition.	Valve position indication (open to closed position change) at CB.	

TABLE 9.3-10 (Sheet 24)

Component	Failure Mode	CVCS Operation Function	Effect on System Operation and Shutdown*	Failure Detection Method**	Remarks
46. Air diaphragm-operated diaphragm valve FCV-111B	a. Fails closed	Boron concentration control - reactor makeup control, dilution, and alternate dilution	Failure blocks fluid flow from RMCS for dilution of RCS coolant during normal plant operation and load follow. No effect on CVCS operation. Operator can dilute RCS coolant by establishing "alternate dilute" mode of system operation. Dilution of RCS coolant not required when bringing the reactor to a safe shutdown condition.	Same methods of detection as those stated for item 45.a.	Same remark as that stated for item 7 in regard to valve design.
	b. Fails open	Boron concentration control - reactor makeup control, dilution, and alternate dilution	Failure allows for alternate dilute mode type operation for system operation of boration and automatic makeup of RCS coolant. No effect on CVCS operation during normal plant operation and load follow and when bringing the reactor to a safe shutdown operation.	Valve position indication (open to closed position change) at CB.	
47. Relief valve 8124	Fails open	Charging and volume control - charging and seal water flow	Failure allows for a portion of flow to suction header of charging pumps to be relieved to BRS recycle holdup tank. Boration of RCS coolant to bring reactor to safe shutdown condition is still possible.	Decrease in VCT level, causing RMCS to operate; VCT level indication (LI-185) and low level alarm at CB; and BRS recycle holdup tank level increase.	Radioactive fluid contained.
48. Air diaphragm-operated globe valve FCV-110A	a. Fails open	Boron concentration control - reactor makeup control, boration, and auto matic makeup	Failure prevents the addition of a preselected quantity of concentrated boric acid solution at a preselected flow rate	Valve position indication (open to closed position change) at CB; and BA flow recording	Same remark as that stated for item 4 in regard to valve design.

TABLE 9.3-10 (Sheet 25)

Component	Failure Mode	CVCS Operation Function	Effect on System Operation and Shutdown*	Failure Detection Method**	Remarks
			to the RCS coolant during normal plant operation, load follow, and when bringing the reactor to a safe shutdown condition. Boration to bring the reactor to a safe shutdown condition is possible; however, flow rate of solution from BA tanks cannot be automatically controlled.	and flow deviation alarm at CB.	
	b. Fails closed	Boron concentration control - reactor makeup control, boration, and automatic makeup	Failure blocks fluid flow of BA solution from BA tanks during normal plant operation, load follow, and when bringing the reactor to a safe shutdown condition. Boration (at BA tank boron concentration level) of RCS coolant to bring the reactor to safe shutdown condition may be possible by opening of alternate BA tank isolation valve 8104 at CB.	Valve position indication (closed to open position change) at CB; and BA flow recording and flow deviation alarm at CB.	
49. Air diaphragm-operated globe valve FCV-111A	a. Fails closed	Boron concentration control - reactor makeup control, dilute, alternate dilute, and automatic makeup	Failure blocks fluid flow of water from RMCS during normal plant operation and load follow. No effect on system operation when bringing the reactor to a safe shutdown condition.	Valve position indication (closed to open position change) at CB; VCT level indication (LI-185) and low level alarm at CB; and makeup water flow recording and flow deviation alarm at CB.	Same remark as that stated for item 7 in regard to valve design.
	b. Fails open	Boron concentration control - reactor makeup control, dilute, alternate dilute, and automatic makeup	Failure prevents the addition of a preselected quantity of water makeup at a preselected flow rate to the RCS coolant during normal plant opera-	Valve position indication (open to closed position change) at CB and makeup water flow recording.	

TABLE 9.3-10 (Sheet 26)

Component	Failure Mode	CVCS Operation Function	Effect on System Operation and Shutdown*	Failure Detection Method**	Remarks
			tion and load follow. No effect on system operation when bringing the reactor to a safe shutdown condition.	and flow deviation alarm at CB.	
50. Motor-operated globe valve 8104	a. Fails closed	Boron concentration control - reactor makeup control, boration, and automatic makeup	Failure reduces redundancy of flow paths for supplying BA solution from BA tanks to RCS via charging pumps. No effect on CVCS operation during normal plant operation, load follow, or safe shutdown operation. Normal flow path via RMCS may be available for boration of RCS coolant.	Valve position indication (closed to open position change) at CB and flow indication at CB.	1. Valve is at a closed position during normal RMCS operation. 2. If both flow paths from BA tanks are blocked due to failure of isolation valves FCV-110A and 8104, borated water from RWST is available by opening isolation valve LCV-112D or LCV-112E.
	b. Fails open	Boron concentration control - reactor makeup control, boration, and automatic makeup	Failure prevents the addition of a preselected quantity of concentrated BA solution at a preselected flow rate to the RCS coolant during normal plant operation, load follow, and when bringing the reactor to a safe shutdown condition. Boration to bring the reactor to a safe shutdown condition is possible; however, flow rate of solution from BA tanks cannot be automatically controlled.	Valve position indication (open to closed position change) at CB and flow indication at CB.	
51. BA transfer pump 1, APBA (pump 2 analogous)	Fails to deliver working fluid	Boron concentration control - reactor makeup control, boration, and automatic makeup	No effect on CVCS operation during normal plant operation, load follow, or bringing reactor to safe shutdown condition. Redun-	Pump motor start relay position indication (open) at CB and local pump discharge pressure	Both BA transfer pumps operate simultaneously for RMCS boration operation.

TABLE 9.3-10 (Sheet 27)

Component	Failure Mode	CVCS Operation Function	Effect on System Operation and Shutdown*	Failure Detection Method**	Remarks
			dant BA transfer pump 2 provides necessary delivery of working fluid for CVCS operation.	indication (PI-113).	
52. Air diaphragm-operated three way valve LCV-112A	Fails open for flow only to BRS recycle hold-up tank	Charging and volume control - letdown flow	Failure bypasses normal letdown flow to BRS recycle holdup tank, resulting in excessive use of RMCS. No effect on operation to bring reactor to safe shutdown condition.	Valve position indication (holdup tank) at CB; VCT water level indication (LI-185) and low level alarm at CB; and increase water level in BRS recycle holdup tank.	Valve is designed to fail open for flow to VCT and is electrically wired so that electrical control solenoids for valve are energized for flow to BRS recycle holdup tank. Valve opens to flow to BRS recycle holdup tank on high VCT water level signal.

List of acronyms and abbreviations

BA - Boric acid
BRS - Boron recycle system
BTR - Boron thermal regeneration
BTRS - Boron thermal regeneration system
CB - Control board
CVCS - Chemical and volume control system
MCC - Motor control center
PRZ - Pressurizer
RC - Reactor coolant
RCS - Reactor coolant system
RHRS - Residual heat removal system
RWST - Refueling water storage tank
RMCS - Reactor makeup control system
VCT - Volume control tank

NOTE: Portions of the CVCS are relied upon to perform as part of the safety-grade cold shutdown designs; therefore, see Section 5.4.7 and Section 7.4 for further discussions.

TABLE 9.3-11

SERVICE GAS REQUIREMENTS

Component Serviced with Nitrogen	Service Gas Function
Safety injection accumulator tanks	Cover gas, source of potential energy
Pressurizer relief tank	Cover gas
Volume control tank	Purge gas (during shutdown)
Spent resin tanks	Sluice spent resins to solid radwaste system
Gas decay tanks	Maintenance during shutdown
Spray additive tank	Cover gas
Feedwater heaters	Purge and cover gas during layup
Steam generator (shell side)	Purge and cover gas during layup
Auxiliary steam generator and reboiler	Purge and cover during layup
Chilled water expansion tank	Cover gas
Chemical addition tanks	Cover gas
Electrical penetration assemblies	Testing
Steam generator blowdown System	Chemical mixing in steam generators
Hydrogen recombiners	Purge gas
Hydrogen recombiners' gas analyzer racks (GAR)	Instrument calibration and purge
Back up compressed gas system accumulators	Source of potential energy
Condensate Storage Tank oxygen concentration	Purge gas to reduced dissolved

TABLE 9.3-11 (Sheet 2)

Component Serviced with Hydrogen	Service Gas Function
Main generator	Cooling medium for generator field
Volume control tank	Recombine free oxygen and stripping agent
Reactor coolant drain Tank	Cover gas (from two 194 SCF local cylinders outside containment)
Gaseous radwaste system hydrogen recombiners	Testing (from a portable 20 SCF storage cylinder)
Component Serviced with Carbon Dioxide	**Service Gas Function**
Main generator gas System	Atmospheric and hydrogen purge
Component Serviced with Oxygen	**Service Gas Function**
Gaseous radwaste system hydrogen recombiners	Recombination with free H2 from volume control tank and other miscellaneous sources
Gaseous radwaste system hydrogen recombiners' gas analyzer racks (GAR)	Instrument supply

TABLE 9.3-12

LABORATORY GAS REQUIREMENTS

Type	Count Room and Hot Lab	Radwaste Lab	Cold Lab
Argon	Yes	No	No
Propane	Yes	No	Yes
Oxygen	No	Yes	No
Hydrogen	Yes	No	No
Nitrous oxide	Yes	No	No
P-10	Yes	No	No
Acetylene	Yes	No	No
Nitrogen	Yes	No	No
Helium	Yes	No	No

Bottle size - less than 300 pounds of gas.

Small cylinders of oxygen and hydrogen/nitrogen mix are located on the hydrogen analyzer skid on elevation 2047’ in the auxiliary building (rooms 1505 and 1506).

TABLE 9.3-13

BORON RECYCLE SYSTEM
PRINCIPAL COMPONENT DATA SUMMARY

Recycle Evaporator Feed Pumps	
Number	2
Design pressure, psig	150
Design temperature, F	250
Design flow, gpm	30/100
Design head, ft	250/200
Material	Austenitic stainless steel
Design code (1)	MS
Recycle Holdup Tanks	
Number	2
Capacity, usable, gal	60,700
Design pressure	Atmospheric
Design temperature, F	200
Material	Austenitic stainless steel
Design code (1)	API 650
Recycle Evaporator Reagent Tank	Note 3
Number	1
Capacity, gal	5
Design pressure, psig	150
Design temperature, F	200
Material	Austenitic stainless steel
Design code (1)	ASME VIII, Div. 1
Recycle Evaporator Feed Demineralizers	
Number	2
Design pressure, psig	300
Design temperature, F	250
Design flow, gpm	120
Resin volume, ft^3	39 max.
Material	Austenitic stainless steel
Design code (1)	ASME VIII, Div. 1
Recycle Evaporator Condensate Demineralizer	Note 3
Number	1
Design pressure, psig	300

TABLE 9.3-13 (Sheet 2)

Design temperature, F	250
Design flow, gpm	120
Resin volume, ft^3	39 max.
Material	Austenitic stainless steel
Design code (1)	ASME VIII, Div. 1

Recycle Evaporator Feed Filter (FHE05)

Number	1
Design pressure, psig	300
Design temperature, F	250
Design flow, gpm	250
Particle retention	(See Note 2 Below)
Material, vessel	Austenitic stainless steel
Design code (1)	ASME VIII, Div. 1

Recycle Evaporator Condensate Filter (FHE06)* Note 3

Number	1
Design pressure, psig	200
Design temperature, F	250
Design flow, gpm	35
Particle retention	(See Note 2 Below) micron size (max)
Material, vessel	Austenitic stainless steel
Design code (1)	ASME VIII, Div. 1

Recycle Evaporator Concentrates Filter (FHE04)* Note 3

Number	1
Design pressure, psig	200
Design temperature, F	250
Design flow, gpm	35
Particle retention	(See Note 2 Below) micron size (max)
Material, vessel	Austenitic stainless steel
Design code (1)	ASME VIII, Div. 1

*Standard filter cartridges are available with variable particle retention characteristics, and the selection of the filter cartridge is based on operating data and industry experience.

TABLE 9.3-13 (Sheet 3)

Recycle Evaporator Package Note 3

Number	1
Design flow, gpm	15
Concentration of concentrate, boric acid, wt percent	4
Concentration of condensate	<10 ppm boron as H3BO3
Material	Austenitic stainless steel
Design code (1)	ASME VIII, Div. 1; MS; TEMA-R; ANSI B31.1

Recyle Holdup Tank Vent Eductor

Number	1
Design pressure, psig	150
Design temperature, F	200
Suction flow, scfm	1 + 0.2
Motive flow, scfm	40
Material	Carbon steel
Design code (1)	MS

Note 1 - Table indicates the required code based on its safety-related importance as dictated by service and functional requirements and by the consequences of their failure. Note that the equipment may be supplied to a higher principal construction code than required.

Note 2 - The selection of filter cartridge and particle retention characteristics is based on the flow rate, filter function, operating data and industry experience.

Note 3 - The recycle evaporator and related equipment are permanently out of service.

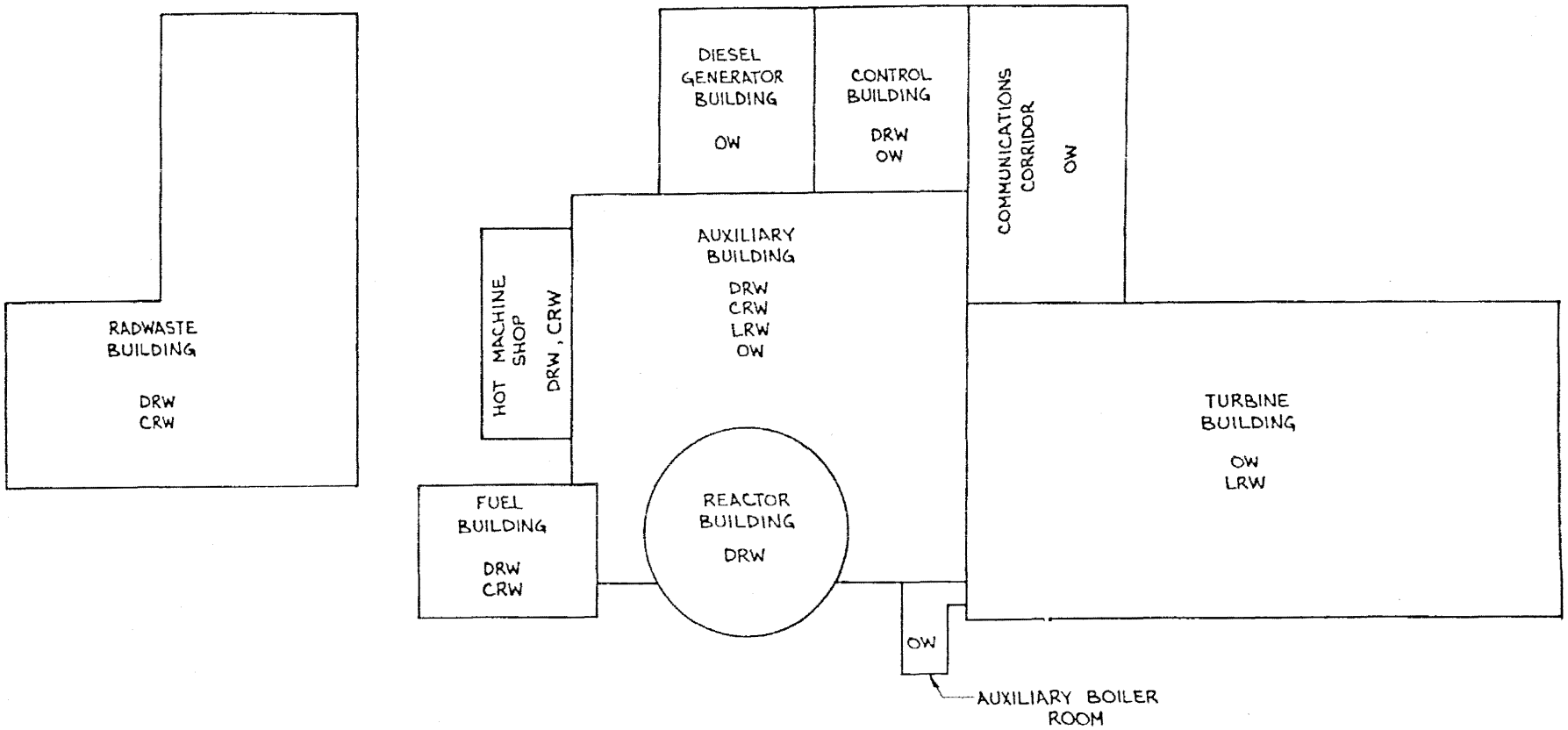

WOLF CREEK
UPDATED SAFETY ANALYSIS REPORT

FIGURE 9.3-6

MAJOR DRAINAGE AREAS
(SHEET 1)

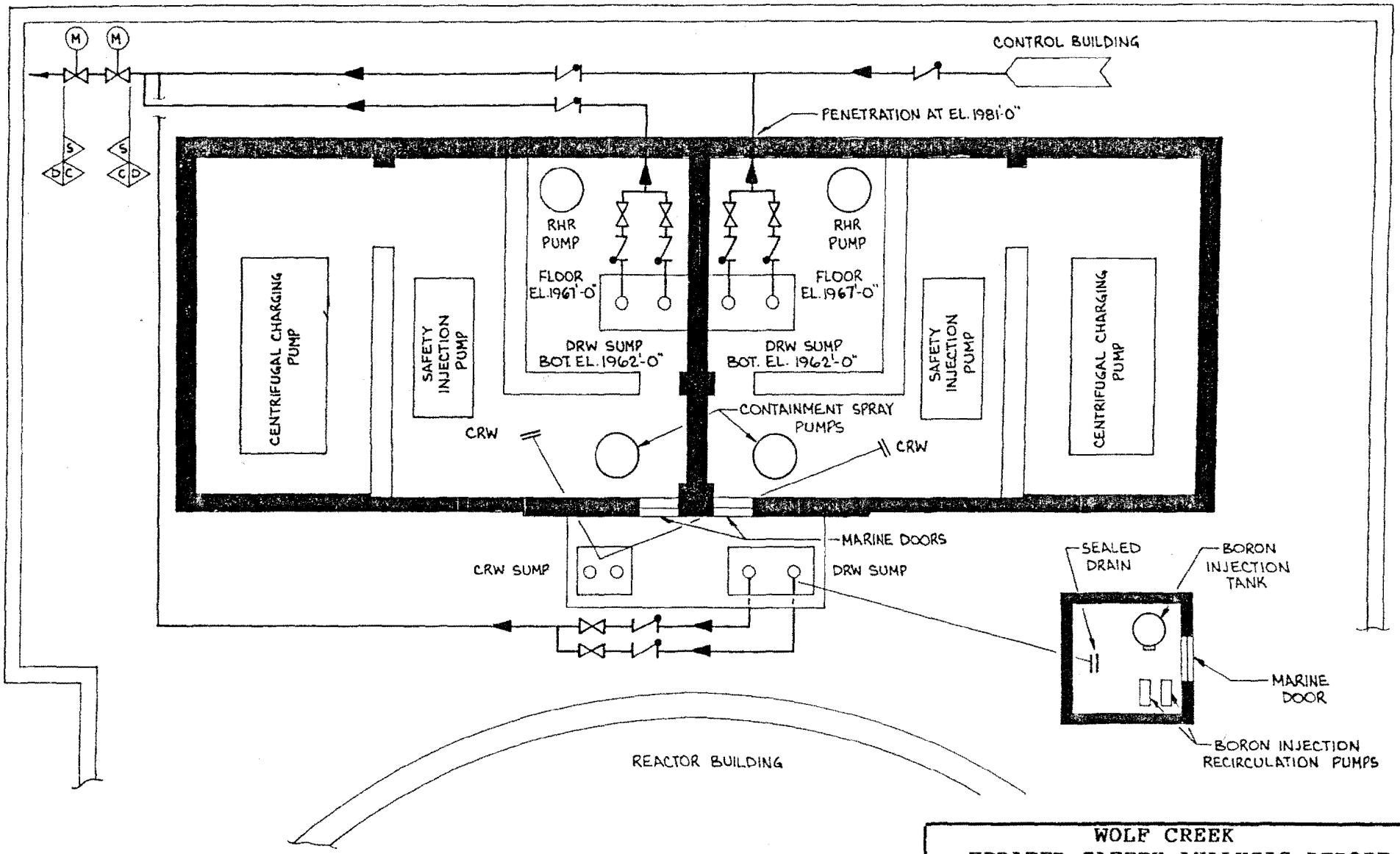

WOLF CREEK
UPDATED SAFETY ANALYSIS REPORT

FIGURE 9.3-6

FLOOR DRAIN FOR SAFETY-RELATED ROOMS AUX. BUILDING BASEMENT (SHEET 2)

Rev. 0

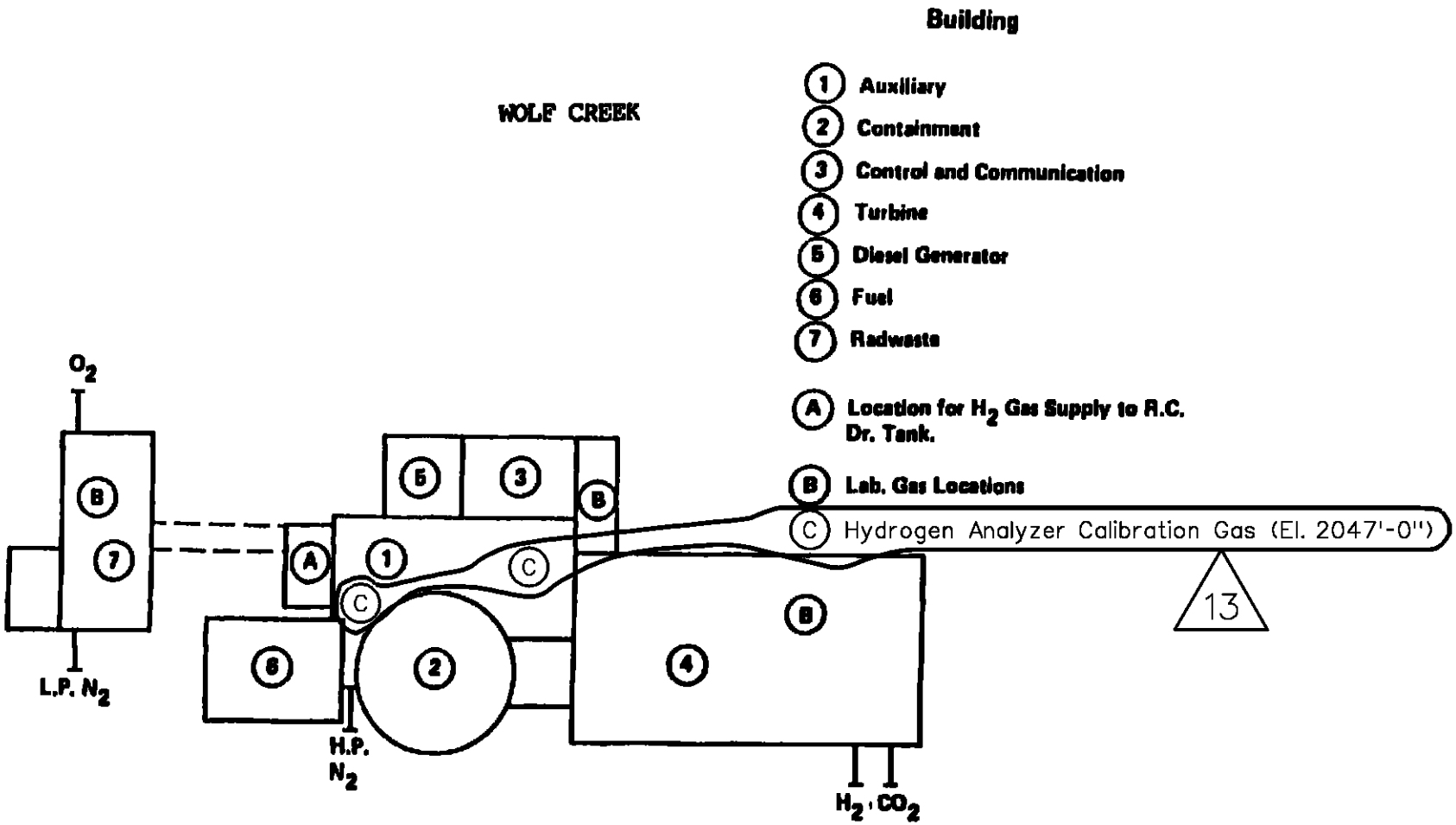

WOLF CREEK
UPDATED SAFETY ANALYSIS REPORT

Figure 9.3-10, REV. 13

GAS SUPPLY LOCATION/INTERFACE

9.4 AIR CONDITIONING, HEATING, COOLING, AND VENTILATION

The following sections provide the design bases, descriptions and evaluations of the HVAC systems for each building. Section 3.11(B) provides a summary of the environmental conditions that result from the systems described herein. Table 9.4-1 provides the design outside ambient conditions.

9.4.1 CONTROL BUILDING HVAC

The control building HVAC systems consist of the control building supply and exhaust systems, the control room, Class IE electrical equipment and access control air-conditioning systems, the access control exhaust system, and the counting room recirculation system. A local air handling unit serves the Secondary Alarm Station (SAS) room.

The control building supply system provides conditioned outside air for ventilation and cooling to each level of the control building. The control building exhaust system provides a means of normal exhaust and of purging smoke following a postulated fire from the clean areas (radiation Zone A areas) of the control building.

The control room air-conditioning system, including the control room filtration system, the control room pressurization system, and the SAS room air handling unit provide a suitable atmosphere for personnel and equipment within the control room.

The Class IE electrical equipment air-conditioning system provides a suitable environment for the Class IE electrical equipment.

The access control air-conditioning system provides a suitable environment for personnel comfort. The access control exhaust system exhausts the potentially contaminated areas of the access control area and provides a means of purging smoke following a postulated fire.

The counting room recirculation system and the SAS room air conditioning system provide a suitable environment for personnel and equipment located in the counting room and the SAS room respectively.

9.4.1.1 Design Bases

9.4.1.1.1 Safety Design Bases

The control room air-conditioning system, the Class IE air-conditioning system, and portions of the control building supply, control building exhaust, and the access control exhaust systems

are safety related and are required to function following a DBA and to achieve and maintain the plant in a post accident safe shutdown condition.

SAFETY DESIGN BASIS ONE - The control room air-conditioning system, the Class IE electrical equipment air-conditioning system, and the control building isolation provisions are protected from the effects of natural phenomena, such as earthquakes, tornadoes, hurricanes, floods, and external missiles (GDC-2).

SAFETY DESIGN BASIS TWO - The control room air-conditioning system, the Class IE electrical equipment air-conditioning system, and the provisions for control building isolation are designed to remain functional after an SSE and to perform their intended functions following a postulated hazard, such as internal missiles, or pipe break (GDC-4).

SAFETY DESIGN BASIS THREE - Safety functions of the control building HVAC systems can be performed, assuming a single active component failure coincident with the loss of offsite power.

SAFETY DESIGN BASIS FOUR - Active components of the control building HVAC systems are capable of being tested during plant operation. Provisions are made to allow for inservice inspection of the ASME Section III components of the safety-related air-conditioning units at appropriate times specified in the ASME Boiler and Pressure Vessel Code, Section XI.

SAFETY DESIGN BASIS FIVE - The control room air-conditioning system, the Class IE electrical equipment air-conditioning system, and the safety-related control building isolation provisions are designed and fabricated to codes consistent with the quality group classification assigned by Regulatory Guide 1.26 and the seismic category assigned by Regulatory Guide 1.29. The power supply and control functions are in accordance with Regulatory Guide 1.32.

SAFETY DESIGN BASIS SIX - The capability to isolate all nonsafety-related HVAC system penetrations of the control building boundary is provided so that the occupation and habitability of the control room, as discussed in Section 6.4, is not compromised (GDC-2 and 19).

SAFETY DESIGN BASIS SEVEN - The control room air-conditioning system provides the control room with a conditioned atmosphere during all modes of plant operation, including post-accident operation (GDC-19). The control room filtration system and the control room pressurization system charcoal adsorbers comply with Regulatory Guide 1.52 to the extent discussed in Table 9.4-2.

SAFETY DESIGN BASIS EIGHT - The Class IE electrical equipment air-conditioning system provides a suitable atmosphere for the Class IE electrical switchgear during all modes of plant operation, including loss of preferred power and post-accident operation.

9.4.1.1.2 Power Generation Design Bases

POWER GENERATION DESIGN BASIS ONE - The control building supply system provides the necessary outside air needed for the required cooling and ventilating of the cable spreading rooms. The control building supply system also provides ventilation and supplemental cooling for each of the other levels of the control building. The control building ventilation system is designed to provide fresh air ventilation at a minimum rate of 0.1 cfm per square foot of floor area.

POWER GENERATION DESIGN BASIS TWO - The control building exhaust system serves to remove from the control building the hydrogen generated by the batteries during normal operation.

POWER GENERATION DESIGN BASIS THREE - The access control air-conditioning system provides the first aid room, the HP office, the sign-in/out areas of the access control area, and the nonvital electric equipment areas of the electrical and mechanical equipment level with an environment suitable for personnel comfort and electrical equipment operation.

POWER GENERATION DESIGN BASIS FOUR - The access control exhaust system collects and processes the effluents from the potentially contaminated regions of the access control area. The exhaust system is designed to meet the requirements of the discharge concentration limits of 10 CFR 20 and the as-low-as-reasonably achievable dose objective of 10 CFR 50, Appendix I. The access control exhaust system charcoal adsorption train complies with Regulatory Guide 1.140, to the extent discussed in Table 9.4-3.

POWER GENERATION DESIGN BASIS FIVE - The counting room recirculation system provides adequate cooling, humidity control, and filtering of the counting room environment for personnel and equipment.

POWER GENERATION DESIGN BASIS SIX - The SAS Room air handling unit provides the SAS room with an environment suitable for personnel comfort and electrical equipment operation.

9.4.1.2 System Description

9.4.1.2.1 General Description

The control building HVAC systems are shown in Figure 9.4-1. The systems consist of the control building supply system, control room air-conditioning system with supplemental filtration and pressurization systems and SAS Room air handling unit, Class IE electrical equipment air-conditioning system, access control air conditioning system, counting room recirculation system, control building exhaust system, and the access control exhaust system. The design conditions for these systems are presented in Table 3.11(B)-1. Potential radiation doses in the control room are discussed in Chapter 15.0.

The control building is serviced by an outside-air-supply system which provides fresh cooled or heated air to each of the various levels of the building. Self-contained air-conditioning units serve the control room elevation and the Class IE electrical equipment floors. Local fan-coil units serve the access control floor and nonvital areas of the electrical and mechanical equipment level and the counting room and the SAS room.

All outside air intakes, both essential and nonessential, are provided with labyrinth missile barriers. The barriers are designed to withstand and absorb missile impacts and to prevent the propagation of a missile trajectory in line with essential equipment.

Two exhaust systems also service the building. The control building exhaust system takes suction from the clean areas of the building, and the access control exhaust system takes suction from the potentially contaminated areas of the access control floor. The control building exhaust system discharges directly to the atmosphere, while the access control exhaust system processes the exhaust air through charcoal adsorbers prior to discharging through the unit vent.

Based on the source terms provided in Section 11.1 and the dose evaluation provided in Section 11.3, the access control exhaust system meets the objective of 10 CFR 50, Appendix I, and the limits of 10 CFR 20.

9.4.1.2.2 Component Description

Codes and standards applicable to the control building HVAC systems are listed in Tables 3.2-1 and 9.4-4. The control room air-conditioning system, including the control room filtration and pressurization systems, the Class IE air-conditioning system, and

safety-related HVAC penetrations of the control building boundaries are designed and constructed in accordance with codes and standards comparable with quality group C. The control room ac system coils and condenser and the Class IE electrical equipment ac system coils and condensers are designed and constructed in accordance with quality group C.

NONESSENTIAL AIR HANDLING UNITS - Those nonessential air handling units which make up a part of the control building HVAC system are the control building supply air unit, access control fan coil unit, and the counting room fan coil unit and the SAS Room air handling unit.

The control building supply air unit consists of a particulate filter, hot-water heating coil, chilled-water cooling coil, centrifugal fan, and electric motor driver.

The access control fan coil unit consists of a particulate filter, chilled-water cooling coil, centrifugal fan, and electric motor driver.

The counting room fan-coil unit consists of an inlet filter module, a chilled-water cooling coil module, a fan module, a diffuser module, and an HEPA filter module.

The SAS Room air handling unit consists of a moderate efficiency prefilter, direct expansion cooling coil, centrifugal fan and motor driver. The SAS Room condensing unit consists of a compressor, condensing coil and condenser fan.

SAFETY-RELATED AIR HANDLING UNITS - The control building HVAC system contains two safety-related air handling units, the control room air-conditioning unit, and the Class IE electrical equipment air-conditioning unit.

Both the control room air-conditioning unit and the Class IE electrical equipment air-conditioning unit consist of 85% efficiency filters, a self-contained refrigeration system utilizing essential service water as the heat sink, centrifugal fans, and electric motor drivers.

NONESSENTIAL FILTER UNITS - The control building HVAC system contains two nonessential filter units, the access control exhaust filter adsorber unit, and the counting room filter unit.

The access control exhaust filter adsorber unit consists of moderate efficiency prefilters, HEPA filters, and charcoal adsorption beds.

The counting room filter unit consists of moderate efficiency prefilters and HEPA filters.

SAFETY-RELATED FILTER UNITS - Those safety-related filter units which are a part of the control building HVAC system are the control room filtration system filter adsorber units and the control room pressurization system filter adsorber units.

Each control room filtration system filter adsorber unit consists of moderate efficiency prefilters, HEPA filters, and charcoal adsorption beds.

Each control room pressurization system filter adsorber unit consists of a demister, electric heater, HEPA filters, and charcoal adsorption beds.

NONESSENTIAL FANS - There are two pairs of nonessential fans in the control building HVAC system -- the access control exhaust fans and the control building exhaust fans.

The access control exhaust fans are centrifugal fans with an electric motor driver.

The control building exhaust fans are vaneaxial fans with an electric motor driver.

SAFETY-RELATED FANS - The control building HVAC system contains two pairs of safety-related fans, the control room filtration fans, and the control room pressurization fans. In addition, three pairs of safety-related recirculation fan systems are available to assist with air circulation in the Class 1E equipment rooms when one train of Class 1E equipment room air conditioning is out of service.

Both the control room filtration system fans and the control room pressurization system fans are centrifugal fans with electric motor drivers.

SUPPLEMENTAL HEATER - Supplemental heating is provided by nonessential electric duct heaters and electric unit heaters.

Electric duct heaters supplement the heating of the control room, access control area, the HVAC equipment room (El. 2016), and the nonvital areas of the dc battery and switchgear area.

Electric unit heaters supplement the heating of the upper and lower cable spreading rooms, the ESF switchgear rooms, the pipe chase/tank area, and the control room air-conditioning equipment room. Each unit heater consists of a coil and a fan with an electric motor driver.

FIRE DAMPERS - Fire dampers are located between fire barriers, as necessary, to maintain the fire ratings of the barriers. Dampers are the 3-hour-rated curtain type.

ISOLATION DAMPERS - Where a means of system isolation is required, parallel-blade-type dampers are utilized. The type of operator employed is dependent upon the specific design and/or usage requirements.

FLOW CONTROL DAMPERS - Single-blade-type or opposed-blade-type dampers are utilized, as necessary, to provide a means of system balancing. In general, these are manually operated. However, some utilize power operators to allow compensation for changes occurring during system operation.

BACKDRAFT DAMPERS - Backdraft dampers are employed, where required, to maintain the proper direction of flow.

TORNADO DAMPERS - Tornado dampers are employed where isolation from the effects of extreme wind or tornado conditions is required. These dampers close with the flow produced by the differential pressure associated with tornadoes or high winds.

9.4.1.2.3 System Operation

GENERAL - The control building is serviced by an outside air supply system which provides fresh cooled or heated air to each of the various levels of the building. Self-contained air-conditioning units serve the control room elevation and the Class IE electrical equipment floors. Local fan-coil units serve the access control floor and the nonvital areas of the electrical and mechanical equipment level, the counting room and the SAS Room.

Two exhaust systems also service the building. The control building exhaust system takes suction from the clean areas of the building, and the access control exhaust system takes suction from the potentially contaminated areas of the access control floor and the basement beneath. The control building exhaust system discharges directly to the atmosphere while the access control exhaust system processes the exhaust air through a charcoal adsorber train prior to discharging through the unit vent.

Cooling water for the nonessential units is supplied by the central chilled water system (Section 9.4.10), and cooling water for the safety-related units is supplied by the essential service water system (Section 9.2.1). Hot water for the control building supply air unit is supplied by the plant heating system (Section 9.4.9).

The control room has two sources of outside air. The normal source of outside air is provided by the control building supply air unit which draws from the intake plenum located on top of the auxiliary building. This intake plenum is identified as an HVAC

penthouse located between building column lines A-3 and A-1, and A-J and A-H on USAR Figure 1.2-14. The emergency source of outside air is provided by the control room pressurization system which draws air from intake louvers located on the west wall of the control building. These louvers are shown on USAR Figures 1.2-24 (grid H-4) and 1.2-28 (grid E-3).

The relative locations of all power block buildings and the location of the radiation release points are shown on USAR Figure 1.2-1. USAR Figure 11.1A-3 identifies the release points of potentially radioactive gaseous effluents.

The calculated total control room leakage with a 1/4-inch w.g. differential pressure is 80 cfm, of which approximately 95 percent is attributable to the doors. The remaining leakage paths are both individually and collectively insignificant in terms of total control room leakage.

Nonetheless, the following specific criteria were included in the control room isolation damper procurement specification to ensure that the required leak-tightness is provided:

a. For dampers with a surface area equal to or greater than 2 ft^2, the maximum allowable leakage at a pressure differential of 6 inches w.g. is 20 cfm/ft^2.

b. For dampers with a surface area of less than 2 ft^2, but greater than 1 ft^2, the maximum allowable leakage at a differential pressure of 6 inches w.g. is 30 cfm/ft^2.

c. For dampers with a surface area of less than 1 ft^2, the maximum allowable leakage at a differential pressure of 6 inches w.g. is 30 cfm.

Discussed below are the power generation operations, fire operation, and emergency operations of the control building HVAC systems. Shutdown operations are identical to the power generation operations.

POWER GENERATION OPERATION - The control building supply air system draws in outside air, filters it through particulate prefilters, either cooling it with a chilled-water coil or heating it with a hot-water coil, and distributes the conditioned air to separate floors of the control building.

The control building supply air system intake is in a penthouse atop the auxiliary building, which is located approximately 15 feet below and 135 feet horizontally from the diesel exhaust discharge point. This separation is sufficient to provide

significant dilution of the diesel exhaust gases; therefore, operation of the diesel during normal plant operations poses no danger to the occupants of the control room or other areas of the building.

The heating or cooling mode of operation of the outside air supply unit is a function of the outside air temperature only. When the outside air temperature exceeds 65 F, conditioned outside air is supplied to the building. When the outside air temperature is between 65 and 50 F, unconditioned outside air is supplied to the building. When the outside air temperature is below 50 F, the heating system is operational. These operations are controlled by temperature switches, located in the ductwork upstream of the coils, which sense the outside air temperature and function accordingly.

When the outside air temperature rises above 65 F, the temperature switch associated with the cooling system activates the supply unit cooling control system. This control system then functions to maintain a constant supply air temperature of 60 F by modulating the flow of chilled water to the coil.

While the outside air temperature is between 65 and 50 F, the supply unit continues to operate, supplying unconditioned air to the building.

When the outside air temperature falls below 50 F, a temperature switch activates the supply unit heating control system. This control system then functions to maintain the temperature of the air leaving the coil at 65 F. The supply unit heating coil is supplied from a secondary hot-water loop to prevent the possible freezeup of the coil when the outside air temperature falls below 32 F. A temperature switch is provided in the outside air unit, downstream of the coils. This temperature switch will trip the supply unit, should the supply temperature drop below 40 F, to protect the coils from freezing.

Air from the control building supply system is supplied to the space above the access control area to remove the heat generated by electric cables. This cooling is provided to minimize the amount of cooling required for the spaces below. During periods of control building isolation, cooling is not required since the ambient temperature in the area will not exceed the ambient design rating (50 C) of the Class IE power cables.

Supplemental heating for the access control area is provided by electric duct heaters located in the supply air mains serving that area. The heaters are interlocked with the supply fan, and operation of the heaters is controlled by room temperature switches which function to maintain space temperatures.

Supplemental heating is also provided by electric unit heaters strategically located in the upper cable spreading room, the lower cable spreading room, the ESF switchgear rooms, the basement areas, and the control room air-conditioning equipment rooms. Each heater is sized for its specific location and is thermostatically controlled to maintain the space design temperature requirements of 60° F or above.

Air from the clean areas of the control building is exhausted by the control building exhaust system. Air from the potentially contaminated areas of the control building is exhausted by the access control exhaust system. Exhaust air from the access control exhaust system is processed through a charcoal filtration train for cleanup prior to discharge through the unit vent. Exhaust hoods are provided in the Room 3208 over the sorting table, and in the hot lab over the rinse sink and over the sample test area. The hoods in the hot lab contain an integral exhaust air bypass arrangement for periods when flow through a hood is not required. The hoods are used as part of the normal exhaust from the spaces and, therefore, contain no isolation provisions.

One of each of the two control building exhaust fans and access control exhaust fans runs continuously during normal plant operations. The motor-operated discharge isolation dampers (one associated with each control building exhaust fan) operate in conjunction with their corresponding fans. Automatic back-draft dampers (one associated with each access control exhaust fan) operate in conjunction with their corresponding fans.

The control building exhaust system serves to remove the hydrogen generated by the batteries during normal plant operation. The quantity of air exhausted from each of the battery rooms is well in excess of that which was calculated as necessary to maintain the concentration of hydrogen in the rooms, under the worst conditions, below the flammability limit.

A differential pressure indicator controller, located across the access control filter adsorber unit, modulates a damper downstream of the filter train to maintain a constant system resistance as the particulate filters load up. This control arrangement will assure a constant system flow.

Each charcoal adsorber is monitored for charcoal bed temperature. Should the bed temperature approach 200° F, an alarm is received in the control room to alert the operators of excessive bed heating. Subsequently, should the bed temperature continue to rise, a 300° F alarm is received in the control room. Each particulate filter bank is provided with differential pressure transmitters wired to the plant computer which alarms at excessive pressure drops.

The access control air-conditioning system operates in a continuous recirculation mode to provide supplemental cooling or heating of the nonvital equipment areas of the electrical and mechanical equipment room and the first aid room, sign-in/out area, and the HP office and record storage area of the access control area.

The system cooling mode of operation is controlled by a temperature controller which senses return air (space) temperature. If the temperature falls below 74°F, no cooling is provided. If the temperature falls below 65°F, the heating mode is initiated.

The system heating mode is controlled by a temperature controller located in the unit return air ductwork. This controller energizes the electric duct heater, as necessary, to maintain the return air (space) temperature at 65°F.

Additional heating of the two mechanical equipment rooms is provided by an electric duct heater in the branches serving those spaces. These heaters are each sized for the specific room served and are thermostatically controlled to maintain the space design temperature requirements of 60°F or above.

The control room air-conditioning system operates in a continuous recirculation mode to maintain the control room temperature. The amount of cooling provided by the self-contained refrigeration system is self-regulating and, therefore, automatically compensates for changes in the control room heat load, including latent load due to presence of moisture. The control room air-conditioning unit limits humidity to 70% RH in the room by dehumidifying supply air.

Heating, if required, is provided by an electric duct heater. This heater is thermostatically controlled to maintain temperatures. The heater serves no safety function.

The SAS room air handling unit normally operates to supply conditioned air to the SAS room to maintain the room temperature. The amount of cooling provided is regulated by regulating the amount of refrigerant which bypasses the condensing coil. The system draws in air from the control room, cools it and discharges it to the SAS room. The amount of bypass is controlled by a thermostat located in the SAS room.

During operation of the SAS room air conditioning system, the supply air branch from the control room air conditioning system to the SAS room is isolated. Should the SAS room air conditioning system fail, the supply air branch from the control room air conditioning system would be manually opened to provide minimal cooling for the SAS room.

The Class IE electrical equipment air-conditioning system is operated in a continuous recirculation mode to maintain the ESF switchgear room, the battery rooms, and the dc switchgear rooms at or below a temperature of 90 F. The amount of cooling provided by the self-contained refrigeration system is self-regulating and, therefore, automatically compensates itself for changes in the room heat loads.

The counting room fan-coil unit operates in a continuous recirculation mode to provide the necessary cooling and filtration of the counting room atmosphere to maintain a suitable ambience for the electronic equipment and personnel in the room. The amount of cooling is controlled by a temperature controller located in the counting room. The controller functions to maintain the space air temperature. Prefilter and an HEPA filter are provided to minimize the airborne particulates in the counting room. A smoke detector installed in the ductwork down stream of the fan-coil unit will shut the unit down if smoke is detected.

The control building supply air unit intake, the control building exhaust system, control room pressurization, and the access control exhaust system contain dampers capable of withstanding the effects of extreme wind or tornado conditions (3 psi total at a rate of 2 psi/second per Regulatory Guide 1.76). These dampers close with a tornado or high winds. The dampers located in the exhaust systems are spring loaded to prevent closure during normal system operations.

Based on the outside air design conditions, design space heat loads and operation of the control building HVAC systems, as described above, no area of the control building (except for the locker areas of the access control area) exceed a relative humidity of 70 percent.

EMERGENCY OPERATION - Located in the control building supply system ductwork, downstream of the control room filter adsorbers, are redundant radiation monitors.

A smoke detector is located upstream of the control room filter adsorbers. These monitors sense contaminants in the influent and alarm in the control room when limits are exceeded. The high radiation monitors initiate isolation of the control building normal supply and exhaust systems.

The nonsafety-related systems which penetrate the boundary of the control building are provided with automatic isolation capabilities. This isolation consists of two dampers, aligned in a series arrangement and powered from separate IE sources. The ductwork located between the two isolation dampers is designed to meet seismic Category I requirements. Upon receipt of the control building isolation signal, these dampers close, thus isolating the control building from all other adjacent buildings and outside air.

The control building isolation signal also automatically bypasses portions of the control room air-conditioning system flow through the associated particulate filter charcoal adsorber train for cleanup and initiates operation of the control room pressurization system. The control room pressurization system draws in outside air, processing it through a particulate filter charcoal adsorber train for cleanup. This outside air is diluted with air drawn from the cable spreading rooms and the electrical equipment floor levels and distributed back into those spaces for further dilution. The control room filtration system takes a portion of air from the supply side of this system, for dilution with portions of the return air from the control room air-conditioning system and processes it through the control room filtration system adsorption train for additional cleanup. This air is then further diluted with the remaining control room air-conditioning system return air, cooled, and supplied to the control room. This process maintains the control room under a positive pressure of 1/4 inch w.g. (min.). This assures exfiltration from the control room, thus preventing any unprocessed contaminants from entering the control room. (The control room is classified as Type B, per the requirements of Regulatory Guide 1.78, with an air exchange rate exceeding 0.06 volume per hour.)

If the control room were isolated but unpressurized, the amount of inleakage resulting from a differential pressure of 1/4 inch w.g., caused by temperature, barometric, or wind variations, would be less than 80 cfm. Leakage rates are calculated in accordance with "Conventional Buildings for Reactor Containment," NAA-SR-10100. The primary paths which contribute to this leakage are (1) the gap

between the floor and the ceiling and building walls, (2) the joints between the stairway walls and the chase walls and building walls, (3) the doors to the communication corridor, the electrical chases, and the stairway, (4) the door frames, (5) the ductwork, piping, and electrical penetrations, (6) penetration inserts, and (7) the ductwork isolation dampers.

The major contributors to the leakage are the doors, which account for approximately 95 percent of the total leakage. The remaining paths are both individually and collectively insignificant in terms of the total control room leakage.

The control room pressurization system intake is in the west wall of the control building and is located approximately 80 feet below and 80 feet horizontally from the diesel exhaust discharge point. This separation is sufficient to provide significant dilution of the diesel exhaust gases; therefore, operation of the diesel during periods of control room isolation poses no danger to the occupants of the control room.

Indication of a loss of preferred ac power, a LOCA, or a fuel handling accident will automatically initiate the Class IE electrical equipment air-conditioning systems if they are not in operation.

During normal plant operations, the battery rooms are purged with fresh air by the control building supply system and the control building exhaust system. This purging maintains the local concentration of hydrogen well below 0.2 volume percent.

During periods of control building isolation associated with a tornado, dilution air is not provided. This isolation can be maintained for approximately 3 days before purging is required to prevent local hydrogen concentration from approaching 2.0 volume percent (the lower flammability limit). This is based on all batteries at full charge throughout the time period.

During periods of control building isolation, following an accident condition, the hydrogen concentration is maintained well below 0.5 volume percent by dilution with air provided by the control room pressurization system.

The ambient temperature in the battery rooms, under any mode of operation, is between 60°F and 90°F. With a single nonfunctional SGK05A or SGK05B unit concurrent with accident condition (LOCA) heat loading as well as design maximum outdoor ambient temperature, the room temperatures may increase to a maximum of 104°F.

During normal plant operations the SAS room is served by the non-vital SAS room air handling unit. During periods of control room operation following loss of offsite power, ventilation air for the SAS room can be provided from the control room air-conditioning system by manual alignment of dampers.

FIRE OPERATIONS - The operation of the HVAC systems during a fire and the interface between the ventilation systems and the fire protection system (Section 9.5) vary, depending on the type of fire protection and detection systems employed.

In those areas where smoke detectors and automatic sprinklers are employed (upper and lower cable spreading rooms and access control area) or manual fire-fighting is used (control room), no interface with or automatic isolation of the HVAC system(s) is provided. If it is determined, following receipt of a fire alarm signal in the control room, that it is necessary to isolate the HVAC system(s) serving the alarmed area, then the operator can initiate isolation from the control room.

In those areas where a halon extinguishing system is employed (dc switchgear and nonvital ac switchgear, El. 2016 and IE ac switchgear, El. 2000), the HVAC system(s) serving those areas are interlocked to provide the necessary isolation upon receipt of a halon actuation signal. A halon release in either of the Class 1E ac switchgear rooms automatically isolates the portion of the control building supply air system and the control building exhaust serving that area and stop the associated Class 1E air-conditioning unit and the Class 1E air-conditioning recirculation system (if in operation).

A halon release in either of the nonvital ac switchgear rooms isolates only that portion of the HVAC system serving the affected room.

A halon release in any one of the dc switchgear rooms automatically initiates isolation of that portion of the control building supply air system and control building exhaust system serving that level and stops the respective Class 1E air-conditioning unit and the Class 1E air-conditioning recirculation system (if in operation).

9.4.1.3 Safety Evaluation

Safety evaluations are numbered to correspond to the safety design bases in Section 9.4.1.1.

SAFETY EVALUATION ONE - The safety-related portions of the control building HVAC systems are located in the control and auxiliary buildings. These buildings are designed to withstand the effects of earthquakes, tornadoes, hurricanes, floods, external missiles, and other appropriate natural phenomena. Sections 3.3, 3.4, 3.5, 3.7(B), and 3.8 provide the bases for the adequacy of the structural design of these buildings.

SAFETY EVALUATION TWO - The safety-related portions of the control building HVAC systems are designed to remain functional after a safe shutdown earthquake. Sections 3.7(B).2 and 3.9(B) provide the design loading conditions that were considered. Sections 3.5 and 3.6 provide the hazards analyses to assure that a safe shutdown, as outlined in Section 7.4, can be achieved and maintained.

SAFETY EVALUATION THREE - The system description for the control building HVAC systems shows that complete redundancy is provided and, as indicated by Table 9.4-5, no single failure compromises the system's safety functions. All vital power can be supplied from either onsite or offsite power systems, as described in Chapter 8.0.

SAFETY EVALUATION FOUR - The control room system, the Class 1E air-conditioning system, and the control building isolation provisions are initially tested with the program given in Chapter 14.0. Periodic inservice functional testing is done in accordance with Section 9.4.1.4.

Section 6.6 provides the ASME Boiler and Pressure Vessel Code, Section XI requirements that are appropriate for the applicable portions of the control room air-conditioning system and the Class 1E electrical equipment system.

SAFETY EVALUATION FIVE - Section 3.2 delineates the quality group classification and seismic category applicable to the safety-related portions of the control building HVAC systems. All the power supplies and control functions necessary for safe function of the control room air-conditioning system, the Class 1E electrical equipment air-conditioning system, and the control building isolation provisions are Class 1E, and described in Chapters 7.0 and 8.0.

SAFETY EVALUATION SIX - Section 9.4.1.2.3 describes the provisions made to assure the isolation of the control room. Section 6.4 evaluates the isolation requirements of Regulatory Guides 1.78 and 1.95.

SAFETY EVALUATION SEVEN - Completely redundant control room air-conditioning systems are provided for the control room. Each system is powered from independent Class 1E power sources, and headered on separate essential service water systems. Operation of these systems, as discussed in Section 9.4.1.2.3, maintains the design conditions specified in Section 3.11(B).

SAFETY EVALUATION EIGHT - Class 1E electrical equipment air-conditioning systems are provided for the Class 1E Switchgear and Battery areas. Each system is powered from independent Class 1E power sources and headered on separate essential service water systems. Operation of this system, as discussed in Section 9.4.1.2.3,maintains the design conditions specified in Section 3.11(B). In the event of a loss of either train of Class 1E electrical equipment air-conditioning systems, the recirculation fan system can be placed in service to allow one train of air-conditioning to provide cooling to both trains of Class 1E electrical equipment rooms.

9.4.1.4 Tests and Inspections

Preoperational testing is described in Chapter 14.0.

Filters and adsorbers for the access control exhaust system, the control room pressurization system, and the control room filtration system are tested in the manufacturer's shop, after initial installation, and subsequent to each filter or adsorber change. Following installation of the filters and adsorbers for the safety-related filtration units (control room pressurization and control room filtration units), interim tests and inspections are performed in accordance with the requirements of Regulatory Guide 1.52, as discussed in Table 9.4-2. Following installation of the filters and adsorbers for the nonsafety-related filtration units (access control filtration unit), interim tests and inspections are performed in accordance with the requirements of Regulatory Guide 1.140, as discussed in Table 9.4-3.

During technical specification surveillance testing (TS 5.5.11a., b., f.) of the Pressurization System filter absorber unit, a Pressurization System flow rate of 2200 cfm ±10% is verified.

All charcoal adsorbs are factory tested in accordance with RDT M-16-lT to exhibit a decontamination efficiency of no less than 99.9 percent for elemental iodine and 98 percent for methyl iodide. Sample charcoal canisters are tested for impregnant efficiency in an independent laboratory using radio-methyl iodide tracers. Inplace testing is performed with a suitable refrigerant, in accordance with the procedures set forth in ANSI N510, to check for bed bypass leakages.

Prefilters do not undergo factory or inplace testing since no credit is taken for removal of particulates.

HEPA filters are factory tested with DOP aerosol to demonstrate a minimum particulate removal efficiency of no less than 99.97 percent for 0.3 micron particulates. Inplace leak testing is carried out with cold polydispersed DOP. Testing is in accordance with the procedures set forth in ANSI N510.

One of each type of safety-related fan (control room air-conditioning system, control room filtration system, control room pressurization system, and Class IE electrical equipment air-conditioning system) are tested in accordance with AMCA standards. All other fans are AMCA rated.

One control room air-conditioning unit and one Class 1E electrical equipment air-conditioning unit are performance tested by the manufacturer to assure design heat removal capabilities.

Major components are accessible during normal plant operation for inspection, maintenance, and periodic testing.

9.4.1.5 Instrumentation Applications

Indication of fan operational status is provided in the control room.

All fans, except the counting room fan coil unit fan, are operable from the control room.

An indication of the position of all isolation dampers is provided in the control room.

Thermostats, located in the various levels and the ductwork, control space temperatures.

A humidistat located in the control room controls the minimum relative humidity in the room. A duct-mounted airflow switch interlocks the operation of the electric steam humidifier with the control building supply air unit. In addition, duct-mounted moisture limit switches de-energize the humidifier when supply air moisture relative humidity exceeds their high limit.

The indication of the amount of filter loading for all filters associated with the essential and nonessential air handlers is provided at each of the air handlers.

Alarms are provided in the control room to indicate high charcoal bed temperatures in the control room filtration, control room pressurization and access control filtration units and high room temperature in the ESF switchgear and dc switchgear rooms.

An alarm is provided in the control room to indicate high hydrogen concentrations in a battery room.

Alarms are provided in the control room to indicate high radiation and smoke in the control building intake.

All instrumentation provided with the filtration units is as required by Regulatory Guide 1.52 or 1.140, as applicable.

9.4.2 FUEL BUILDING HVAC

The fuel building ventilation system consists of the fuel building supply system which includes the fuel building heating coil, the fuel building supply air unit, and the fuel handling area cooling coil; the emergency exhaust system, including the emergency exhaust heating coil; the auxiliary/fuel building normal exhaust system; the fuel storage pool cooling pump room coolers; and the unit heaters. Since both the emergency exhaust system and the auxiliary/fuel building normal exhaust system also serve the auxiliary building, their operation in the auxiliary building is discussed in Section 9.4.3.

The fuel building supply system provides conditioned outside air for ventilation and cooling or heating, as required, to all areas of the fuel building. The auxiliary/fuel building normal exhaust system exhausts air from the area above the fuel storage pool during normal operation and provides a means of purging smoke following a postulated fire.

In the event of a fuel handling accident, the emergency exhaust system collects and processes the airborne particulates in the fuel building. In the event of a LOCA, the emergency exhaust system processes the atmosphere of the auxiliary building.

The fuel storage pool cooling pump room coolers provide a suitable ambient temperature for the electric motor drives of the safety-related pumps.

The fuel building unit heaters provide supplemental heating for the fuel building, when required.

9.4.2.1 Design Bases

9.4.2.1.1 Safety Design Bases

The emergency exhaust system, the fuel storage pool cooling pump room coolers, and those portions of the fuel building supply system and the auxiliary/fuel building normal exhaust system which are required to provide isolation of the fuel building are safety related and are required to function following a DBA and to achieve and maintain the plant in a post accident safe shutdown condition.

SAFETY DESIGN BASIS ONE - The emergency exhaust system, the fuel storage pool cooling pump room coolers, and the HVAC penetrations of the fuel building boundaries are protected from the effects of natural phenomena, such as earthquakes, tornadoes, hurricanes, floods, and external missiles (GDC-2).

SAFETY DESIGN BASIS TWO - The emergency exhaust system, the fuel storage pool cooling pump room coolers, and the HVAC penetrations of the fuel building boundary remain functional after a SSE and perform their intended function following a postulated hazard, such as internal missiles, or pipe break (GDC-4).

SAFETY DESIGN BASIS THREE - The safety functions of the fuel building HVAC systems can be performed, assuming a single active component failure coincident with the loss of offsite power.

SAFETY DESIGN BASIS FOUR - Active components of the fuel storage pool cooling pump room coolers, the emergency exhaust system and the fuel building HVAC boundary penetration isolation provisions

are capable of being tested during plant operation. Provisions are made to allow for inservice inspection of components at appropriate times, as specified in the ASME Boiler and Pressure Vessel Code, Section XI.

SAFETY DESIGN BASIS FIVE - The emergency exhaust system, the fuel storage pool cooling pump room coolers, and the HVAC penetrations of the fuel building boundaries are designed and fabricated to codes consistent with the quality group classification assigned by Regulatory Guide 1.26 and the seismic category assigned by Regulatory Guide 1.29. The power supply and control functions are in accordance with Regulatory Guide 1.32.

SAFETY DESIGN BASIS SIX - The ability to isolate the HVAC system penetrations of the fuel building boundaries is provided, when required, so that the emergency exhaust system functions are not compromised.

SAFETY DESIGN BASIS SEVEN - Means are provided to assure both the control and monitoring of radioactive releases following a fuel handling accident (GDC-60 and GDC-64). Radiological consequences of a fuel handling accident are evaluated in Chapter 15.0.

SAFETY DESIGN BASIS EIGHT - The fuel storage pool cooling pump rooms' ambient temperature is limited to assure operability of the fuel storage pool cooling pump.

9.4.2.1.2 Power Generation Design Bases

POWER GENERATION DESIGN BASIS ONE - The fuel building ventilation system maintains the space temperature between 60 and 110°F during normal and fuel handling operations.

POWER GENERATION DESIGN BASIS TWO - The auxiliary/fuel building normal exhaust system is sized to exhaust slightly more air than is being supplied to inhibit unprocessed exfiltration from the building.

POWER GENERATION DESIGN BASIS THREE - The fuel building ventilation system is designed to maintain the airborne radioactivity levels within the fuel building below the maximum permissible concentrations (MPC), as defined by 10 CFR 20. The exhaust system is designed to meet the requirements of the discharge concentration limits of 10 CFR 20 and the ALARA dose objective of 10 CFR 50, Appendix I.

9.4.2.2 System Description

9.4.2.2.1 General Description

The fuel building ventilation system is designed to provide fresh air, heated or cooled, as required, for the fuel building. The fuel building and auxiliary building share common ventilation exhaust systems for normal and emergency operation. The auxiliary/fuel building normal exhaust system is described in Section 9.4.3. The fuel building HVAC systems are shown in Figure 9.4-2.

The emergency exhaust system will collect and process the fuel building atmosphere in the event of a fuel handling accident. During operation of the emergency exhaust system, the nonessential fuel building HVAC air paths are isolated and the building exhausted to assure that fission products and particulate matter are collected and processed. The fuel building intake air system is provided with two motor-operated dampers in a series arrangement. Indication of high radiation levels in the fuel building will initiate automatic transfer to the emergency exhaust system.

Each fuel storage pool pump room is provided with a local independent room cooler.

During a tornado or extreme wind conditions, the fuel building is vented to equalize pressures.

Based on the source terms provided in Section 11.1 and the dose evaluation provided in Section 11.3, the exhaust system meets the objective of 10 CFR 50, Appendix I, and the limits of 10 CFR 20.

9.4.2.2.2 Component Description

Codes and standards applicable to the fuel building HVAC systems are listed in Table 3.2-1. Design data for major components of the Fuel Building HVAC systems are presented in Table 9.4-6. The emergency exhaust system, fuel storage pool cooling system pump room coolers, and the safety-related HVAC penetrations of the fuel building boundaries are designed and constructed in accordance with codes and standards comparable with quality group C. The fuel storage pool cooling system pump room cooling coils are designed and constructed in accordance with quality group C.

NONESSENTIAL AIR HANDLING UNITS - The fuel building supply air units are the nonessential air handling units in the fuel building. Each unit consists of a chilled-water cooling coil and centrifugal fan with electric motor driver.

SAFETY-RELATED ROOM COOLERS - The only safety-related room coolers located in the fuel building are the fuel storage pool cooling pump room coolers. Each unit consists of an essential service water cooling coil and centrifugal fan with electric motor drive.

SAFETY-RELATED FILTRATION UNITS - The emergency exhaust filter/adsorber units are located in the fuel building. Each filter train consists of moderate efficiency prefilters, HEPA filters, and charcoal adsorption beds.

SAFETY-RELATED FANS - The emergency exhaust system fans are located in the fuel building. These fans are centrifugal fans with electric motor drivers.

HEATING EQUIPMENT - Heating of the fuel building is provided by a hot-water heating coil located in the fuel building supply air ductwork and by unit heaters located in various areas of the building. Heating of the air to each of the emergency exhaust system filter/adsorber units is provided by a safety-related electric duct heater. Unit heaters are either hot-water type, consisting of a coil and fan with an electric motor, or electric heating coil type.

SUPPLEMENTAL COOLING - Additional cooling is provided, when required, by a chilled-water cooling coil located in the supply air system ductwork to the fuel storage pool area.

ISOLATION DAMPERS - Where a means of system isolation is required, parallel-blade-type dampers are utilized. The type of operator employed is dependent upon the specific design and/or usage requirements.

FLOW CONTROL DAMPERS - Opposed-blade-type dampers are utilized, as necessary, to provide a means of system balancing.

BACKDRAFT DAMPERS - Backdraft dampers are employed, where required, to maintain the proper direction of flow.

TORNADO DAMPERS - Tornado dampers are employed where isolation from the effects of extreme wind or tornado conditions is required. These dampers close with the flow produced by the

differential pressure associated with the tornadoes or high winds.

FIRE DAMPERS - Fire dampers are located in fire barriers, as necessary, to maintain the fire ratings of the barriers. Dampers are the 3-hour-rated curtain type.

9.4.2.2.3 System Operation

The fuel building is served by an outside air supply system which provides fresh outside air, either heated or cooled as required, to all areas of the fuel building. The supply air unit has provisions for operating in a recirculation mode. Additional cooling for the fuel handling area is provided by a cooling coil located in the duct supplying that area.

Within the fuel building, the auxiliary/fuel building normal exhaust system takes suction from the area above the fuel storage pool and mixes that air with the air from the auxiliary building prior to processing it through the auxiliary/fuel building filter adsorber train and discharging it to the unit vent.

The emergency exhaust system collects and processes the fuel building atmosphere in the event of a fuel handling accident. During operation of the emergency exhaust system, the fuel building nonessential HVAC air paths are isolated and the building exhausted to assure that fission products and particulate matter are collected and processed. The fuel building intake air system is provided with two motor-operated dampers in a series arrangement. Each damper is powered from a separate Class IE source to assure closure. This transfer occurs automatically upon receipt of a fuel building isolation signal. The emergency exhaust system maintains a minimum negative pressure of greater than or equal to 1/4 in. w.g. to assure that all leakage is into the building.

The emergency exhaust system is on standby for an automatic start following receipt of a fuel building isolation signal or a safety injection signal (SIS). The initiation of the LOCA mode of operation (SIS) takes precedence over any other mode of operation.

Each fuel storage pool cooling pump room is provided with a local independent cooling unit. These cooling units utilize essential service water as the heat sink (service water during normal plant

operation) and are powered by the same Class IE power supply as the associated pump to be cooled. Each unit has the capacity to provide 100 percent of the cooling required.

During a tornado or extreme wind conditions, the fuel building is vented to equalize pressures. Missile protection is provided to prevent a tornado missile from damaging HVAC equipment required during safe shutdown.

Discussed below are the power generation operations and the emergency operations of the fuel building HVAC systems.

The differences between shutdown operations and power operations are few and are, therefore, covered under the power generation operations.

POWER GENERATION OPERATION - Outside air is drawn in by one of the two supply air units, filtered through the particulate filter, conditioned as required, and distributed to the various areas of the fuel building. Depending on the space temperature requirements, the outside air is either heated by the hot-water coil located in the outside air intake or cooled by the supply air unit's chilled-water coil. Each fuel storage pool cooling pump room is provided with a room cooler to maintain the ambient temperature within limits. Space heating is provided by the outside air intake heating coil and supplemented by hot-water and electric unit heaters.

The heating or cooling mode of operation of the outside air intake unit is controlled by the outside air temperature. When the outside air temperature exceeds 78 F, the chilled-water-cooled outside air is supplied to the building. When the outside air temperature is between 78 F and 50 F, outside air is supplied directly into the building. When the outside air temperature is below 50 F, the heating system is operational. These operations are controlled by temperature switches located in the inlet ductwork, upstream of the coils.

When the outside air temperature rises above 78 F, the temperature switch associated with the cooling system activates the supply unit cooling control system. This control system then functions to maintain a constant supply air temperature, by modulating the flow of chilled water to the coil.

During fuel handling operations, the supplementary chilled-water coil located in the supply air duct may be manually actuated. Once actuated, the chilled-water flow to the coil is automatically modulated to limit the ambient temperature in the fuel handling area to 110 F.

When the outside air temperature falls below 50 F, a temperature switch activates the heating coil control system. The heating coil is supplied from a secondary hot-water loop which is, in turn, supplied from the plant heating system. This arrangement is provided to circulate water through the coil to prevent a possible freezeup of the coil.

The heating control system consists of temperature transmitters located in various spaces, which sense the space temperature and transmit a corresponding signal to a single temperature controller. When any of these signals indicates that a space temperature is below 60 F, the temperature controller then modulates the amount of heating accordingly. The temperature controller controls the secondary loop temperature by regulating the amount of hot water which enters the secondary loop of the heating coil.

A temperature switch is provided in the supply air duct downstream of the heating coil. This temperature switch will isolate the supply air intake and trip the supply fan, should the supply air temperature drop below 40 F, to protect the coils from freezing.

The fuel building supply air system intake is in the side of the west wall of the fuel building, and is located approximately 70 feet below and 165 feet horizontally from the diesel exhaust discharge point. This separation is sufficient to provide significant dilution of the diesel exhaust gases; therefore, operation of the diesel during normal plant operations will result in no significant ingestion of exhaust gases into the fuel building.

Supplemental heating is provided by unit heaters located throughout the building. Each unit heater is sized for its location, and each is thermostatically controlled to maintain the space design requirements of 60 F or above.

The auxiliary/fuel building normal exhaust system components are located in the auxiliary building and are described in Section 9.4.3. All normal exhaust from the fuel building is through the auxiliary/fuel building normal exhaust system.

The auxiliary/fuel building normal exhaust system and/or the emergency exhaust system provide a means of purging smoke following a postulated fire.

The operation of the supply air units is interlocked with the operation of the auxiliary/fuel building normal exhaust fans. A supply air unit will operate in the supply mode only if an auxiliary/fuel building normal exhaust fan is operating at fast

speed. When a normal exhaust fan is operating at slow speed, the supply air unit operates only if in the recirculation mode of operation.

The fuel building intake air isolation system consists of two dampers in a series arrangement, each powered by a separate Class IE source. The dampers are designed to close automatically upon a high radiation indication within the fuel building.

EMERGENCY OPERATIONS - Actuation of the emergency mode of operation is initiated either manually by operator action or automatically upon detection of high radiation levels in the fuel building. All air from the fuel building is processed through the emergency exhaust filter adsorber train, prior to release from the unit vent, and all makeup air is by infiltration only.

Actuation of the FBVIS isolates the outside air intake system, trips the supply air handling units and closes the corresponding damper in the normal exhaust ductwork to the auxiliary building in order to isolate the fuel building.

In the event of a LOCA, the SIS trips off the fuel building supply fan and closes the dampers in the normal exhaust system to isolate the fuel building exhaust ductwork from the auxiliary building. The SIS concurrently energizes the emergency exhaust fan, opens the corresponding damper in the emergency ductwork from the auxiliary building and ensures that the appropriate damper in the emergency ductwork from the fuel building is in its throttled position to provide a negative pressure of greater than or equal to 1/4 in. w.g. in the auxiliary building. All exhaust is processed through the fuel building emergency exhaust filter train. Under this mode, all nonessential fuel building HVAC is out of service.

Each charcoal adsorber train is monitored for charcoal bed temperature. Should the bed temperature approach 200 F, an alarm is received in the control room to alert the operators of excessive bed heating. Subsequently, if bed temperature continues to rise, a 300 F alarm is received in the control room.

To prevent backflow through the system, upstream isolation is provided by a backdraft damper located at the inlet to the filter train. Each particulate filter bank is provided with differential pressure transmitters wired to the plant computer which will alarm excessive pressure drops.

The emergency exhaust system is provided with electric heating coils to maintain the relative humidity of the air entering the charcoal filters below 70 percent.

The fuel storage pool cooling pump room coolers are activated when their associated pump starts. Each pump room cooler is full capacity, utilizes service water (normal operations) or essential service water (accident operations) as the cooling medium, and is powered from the same Class IE source as the associated fuel storage pool cooling pump. Each pump room cooler is located in its respective pump room and operates in a complete recirculation mode. Each pump room is monitored for space temperature; should the space temperature exceed 122 F, the condition will be alarmed in the control room via the plant computer. Fresh air for ventilation is provided during normal plant operation by the fuel building supply system.

9.4.2.3 Safety Evaluation

Safety evaluations are numbered to correspond to the safety design bases in Section 9.4.2.1.

SAFETY EVALUATION ONE - The safety-related portions of the fuel building HVAC systems are located in the fuel building and the auxiliary building. These buildings are designed to withstand the effects of earthquakes, tornadoes, hurricanes, floods, external missiles, and other appropriate natural phenomena. Sections 3.3, 3.4, 3.5, 3.7(B), and 3.8 provide the bases for the adequacy of the structural design of these buildings.

SAFETY EVALUATION TWO - The safety-related portions of the fuel building HVAC systems are designed to remain functional after a safe shutdown earthquake. Sections 3.7(B).2 and 3.9(B) provide the design loading conditions that were considered. Sections 3.5 and 3.6 provide the hazards analyses to assure that a safe shutdown, as outlined in Section 7.4, can be achieved and maintained.

SAFETY EVALUATION THREE - Complete redundancy is provided and, as indicated by Table 9.4-7, no single failure will compromise the system's safety functions. All vital power can be supplied from either onsite or offsite power systems, as described in Chapter 8.0.

SAFETY EVALUATION FOUR - The fuel storage pool cooling pump room coolers, the emergency exhaust system, and the fuel building HVAC boundary penetration isolation provisions are initially tested with the program given in Chapter 14.0. Periodic inservice functional testing is done in accordance with Section 9.4.2.4.

Section 6.6 provides the ASME Boiler and Pressure Vessel Code, Section XI requirements that are appropriate for the fuel storage pool cooling pump room coolers.

SAFETY EVALUATION FIVE - Section 3.2 delineates the quality group classification and seismic category applicable to the safety-related portion of this system and supporting systems. All the power supplies and control functions necessary for safe function of the fuel storage pool cooling pump room coolers, emergency exhaust system, and the fuel building HVAC boundary penetration isolation provisions are Class IE, as described in Chapters 7.0 and 8.0.

SAFETY EVALUATION SIX - Section 9.4.2.2.3 describes the provisions made to assure the isolation of the auxiliary building following a DBA.

SAFETY EVALUATION SEVEN - The emergency exhaust system maintains a negative pressure of no less than 1/4 in. w.g. in the fuel building to prevent unprocessed exfiltration following a fuel handling accident which releases radioactivity. The emergency exhaust system is monitored for radioactivity both upstream and downstream of the filter adsorber unit prior to release to the site. The filter adsorber unit limits the radiological consequences of a fuel handling accident to less than 10 CFR 50.67 limits.

SAFETY EVALUATION EIGHT - Room coolers are installed in each fuel storage pool cooling pump room and are designed to limit pump room ambient temperature to assure operability of the fuel storage pool cooling pump.

9.4.2.4 Tests and Inspections

Preoperational testing is described in Chapter 14.0.

Filters and adsorbers for the emergency exhaust system are tested in the manufacturer's shop, after initial installation and subsequent to each filter or adsorber change. After installation, interim tests and inspections are performed after every 720 hours of operation and once per 18 months in accordance with the requirements of Regulatory Guide 1.52 and the Technical Specifications, to detect any deterioration of components that may develop under service or standby conditions.

Prefilters do not undergo factory or inplace testing since no credit is taken for removal of particulates in meeting permissible dose rates. However, unloaded prefilters will exhibit a 55-percent efficiency (min.) for the removal of coarse particulates when tested in accordance with ASHRAE-52.

HEPA filters are factory tested with monodispersed DOP aerosol to demonstrate a minimum particulate removal efficiency of no less than 99.97 percent for 0.3 micron particulates. Inplace leak testing is carried out with cold polydispersed DOP. Testing is in accordance with procedures set forth in ANSI N510.

Charcoal adsorbers are qualified per Regulatory Guide 1.52 and are factory tested in accordance with RDT M-16-IT to exhibit a decontamination efficiency of no less than 99.9 for elemental iodine and 98 percent for methyl iodide. Sample charcoal canisters are tested for impregnant efficiency in an independent laboratory, using radiomethyl iodide tracers. Inplace testing is performed with a suitable refrigerant, in accordance with the procedures set forth in ANSI N510, to check for bed bypass leakages.

The emergency exhaust system, the fuel building HVAC boundary penetration isolation provisions, and fuel storage pool cooling pump room coolers will undergo preoperational testing prior to plant startup. The remaining system undergoes acceptance testing.

One fan from each of the emergency exhaust fans and fuel storage pool cooling pump room cooler fans are tested in accordance with AMCA standards. All other fans are AMCA rated.

Major components are accessible during normal plant operation for inspection, maintenance, and periodic testing.

9.4.2.5 Instrumentation Applications

Indication of the operational status of all fuel building HVAC fans is provided in the control room.

All fans, except the fuel storage pool cooling pump room cooler fans, are operable from the control room.

An indication of the position of all isolation dampers is provided in the control room.

Thermostats, located in various areas of the fuel building and in the HVAC ductwork, control space temperatures.

The amount of filter loading for the supply air unit intake filter is indicated at the supply unit.

Indication of the levels of gaseous particulate and iodine radioactivity being exhausted from the fuel building during all modes of operation is available in the control room.

All instrumentation provided with the emergency exhaust filter/adsorber unit is as required by Regulatory Guide 1.52.

A high temperature computer alarm for each of the fuel storage pool cooling pump rooms is provided in the control room.

9.4.3 AUXILIARY BUILDING

The auxiliary building ventilation system consists of the auxiliary building supply system, the auxiliary/fuel building normal exhaust system (including the decontamination tanks exhaust scrubbers), the emergency exhaust system, the main steam tunnel supply system, the main steam tunnel exhaust system, and the access tunnel transfer fan. Local fan coil units serve the electrical equipment room, the component cooling water pump room, the ground floor corridor, the hot machine shop/hot instrument shop, the normal charging pump room, and the basement corridor. Local room coolers serve the safety injection pump rooms, the component cooling water pump rooms, the RHR pump rooms, the centrifugal charging pump rooms, the containment spray pump rooms, the auxiliary feedwater (motor-driven) pump rooms, and the electrical penetration rooms. A room air-conditioner serves the I&C Hot Shop.

Since both the auxiliary/fuel building normal exhaust system and the emergency exhaust system also serve the fuel building, their operation in the fuel building is described in Section 9.4.2. All modes of operation discussed in this section are applicable to the auxiliary building only.

The auxiliary building supply system and the main steam tunnel supply system function to provide conditioned outside air for ventilation and cooling or heating, as required, to each level of the auxiliary building. During normal operations, the auxiliary/fuel building normal exhaust system and the main steam tunnel exhaust system operate to provide the required exhaust from the building. These systems also provide a means of purging smoke following a postulated fire.

During periods when the decontamination system tank(s) are in use, the decontamination tanks exhaust scrubber(s) operate to exhaust any fumes evolving from the tanks.

Following a LOCA, the emergency exhaust system serves to collect and process airborne particulates in the auxiliary building and exhausts the air purged from the containment via the containment hydrogen control system.

The fan coil units serve to provide supplemental cooling of the auxiliary building, as required.

The pump room coolers provide a suitable ambient environment for the electric motor drivers for the safety-related pumps.

The penetration room coolers provide a suitable atmosphere for the safety-related electrical equipment located in the electrical penetration rooms.

The I&C Hot Shop air-conditioning unit provides a suitable environment for equipment and personnel working in the shop.

The access tunnel transfer fan functions to supply air from the auxiliary building basement corridor to the radwaste tunnel.

The auxiliary building unit heaters provide supplemental heating to the auxiliary building, when required.

9.4.3.1 Design Bases

9.4.3.1.1 Safety Design Bases

The pump room coolers, the penetration room coolers, the emergency exhaust system, and those portions of the auxiliary building and the main steam tunnel supply systems and the auxiliary/fuel building normal exhaust and main steam enclosure building exhaust systems which are required to provide isolation of the auxiliary building are safety-related and are required to function following a DBA and to achieve and maintain the plant in a post accident safe shutdown condition. The I&C Hot Shop air-conditioning unit serves no safety function, and a failure of this unit will not affect the safe shutdown of the plant.

SAFETY DESIGN BASIS ONE - The pump room coolers, the penetration room coolers, the emergency exhaust system, and the auxiliary building isolation provisions are protected from the effects of natural phenomena, such as earthquakes, tornadoes, hurricanes, floods, and external missiles (GDC-2).

SAFETY DESIGN BASIS TWO - The pump room coolers, the penetration room coolers, the emergency exhaust system, and the isolation provisions for the auxiliary building remain functional after a safe shutdown earthquake and perform their intended function following a postulated hazard, such as internal missiles, or pipe break (GDC-4).

SAFETY DESIGN BASIS THREE - The safety functions of the auxiliary building HVAC systems can be performed, assuming a single active component failure coincident with the loss of offsite power.

SAFETY DESIGN BASIS FOUR - Active components of the auxiliary building safety-related HVAC systems are capable of being tested during plant operation. Provisions are made to allow for inservice inspection of components at appropriate times specified in the ASME Boiler and Pressure Vessel Code, Section XI.

SAFETY DESIGN BASIS FIVE - The pump room coolers, the penetration room coolers, the emergency exhaust system, and the safety-related auxiliary building isolation provisions are consistent with the quality group classification assigned by Regulatory Guide 1.26 and with the seismic category assigned by Regulatory Guide 1.29. The power supply and control functions must be in accordance with Regulatory Guide 1.32.

SAFETY DESIGN BASIS SIX - The capability to isolate both the safety and nonsafety-related HVAC system penetrations of the auxiliary building boundary is provided so that the safety-related HVAC systems' functions are not compromised.

SAFETY DESIGN BASIS SEVEN - Means are provided to assure both the control and monitoring of gaseous radioactive releases following a LOCA. The radiological consequences are evaluated in Section 15.0.

SAFETY DESIGN BASIS EIGHT - The ESF pump room coolers limit the ESF pump room ambient temperatures to assure operability of the ESF pumps.

9.4.3.1.2 Power Generation Design Bases

POWER GENERATION DESIGN BASIS ONE - The auxiliary building supply system provides conditioned outside air to maintain the ground floor level of the auxiliary building at or below 104 F. The auxiliary building supply system also provides supplemental cooling for each of the other floor levels of the auxiliary building. The auxiliary building supply system provides fresh air ventilation at a rate of 0.1 cfm/ft^2 of floor area or greater.

POWER GENERATION DESIGN BASIS TWO - The main steam tunnel supply and exhaust systems limit the temperature to a maximum of 120 F and a minimum of 50 F and provide fresh air ventilation.

POWER GENERATION DESIGN BASIS THREE - The auxiliary/fuel building normal exhaust system exhausts slightly more air than is being

supplied, to inhibit exfiltration of the air from the auxiliary building. The main steam tunnel exhaust system exhausts an amount of air equal to that being supplied.

POWER GENERATION DESIGN BASIS FOUR - The auxiliary building ventilation system maintains the auxiliary building sample room between 60°F and 104°F, the hot machine shop and the hot instrument shop between 60°F and 85°F. The electrical equipment room ventilation system maintains the room at or below 80°F. All other areas of the auxiliary building are maintained between 60°F and 104°F except as noted in Table 3.11(B)-1. The boric acid storage tank areas, the pipe chase containing the boric acid piping which runs between the tanks and the boric acid filters, and the boric acid filter valve gallery are maintained at a minimum of 75°F to prevent crystallization of the boron in the lines.

POWER GENERATION DESIGN BASIS FIVE - The auxiliary building air flow patterns are from levels of lower contamination potential to levels of higher contamination potential.

POWER GENERATION DESIGN BASIS SIX - The design exhaust flow of a single decontamination tank's exhaust scrubber is sufficient to prevent the escape of fumes from the largest tank to the room. Each scrubber removes sufficient caustic and acidic fumes from the exhaust air so that the exhaust air can be discharged to the auxiliary/fuel building normal exhaust system without adverse effects on the system components.

POWER GENERATION DESIGN BASIS EIGHT - The ventilation exhaust system is designed to meet the requirements of the discharge concentration limits of 10 CFR 20 and the ALARA dose objective of 10 CFR 50, Appendix I. The auxiliary/fuel building normal exhaust system filter adsorber unit complies with Regulatory Guide 1.140, to the extent discussed in Table 9.4-3.

POWER GENERATION DESIGN BASIS NINE - The I&C Hot Shop air-conditioning unit limits the I&C Hot Shop temperature to a maximum of 78°F.

9.4.3.2 System Description

9.4.3.2.1 General Description

The auxiliary building HVAC system is shown in Figure 9.4-3.

The auxiliary building is served by an outside air supply system which provides fresh outside air, either heated or cooled as required, to all levels of the auxiliary building. Local fan coil units serve the basement corridor area, the normal charging pump room, the ground floor corridor, the hot machine shop/hot instrument shop, the component cooling water pump room, and the electrical equipment room areas of the auxiliary building. Local cooling units are provided to minimize ductwork requirements.

The main steam tunnel is served by a unit which provides fresh outside air, either heated or cooled as required.

The auxiliary/fuel building normal exhaust system takes suction from the areas of greater contamination potential of the auxiliary building, mixes this exhaust air with the exhaust air from the fuel building, and processes the exhaust air through a charcoal adsorber train prior to discharge through the unit vent. Based on the source terms provided in Section 11.1 and the dose evaluation provided in Section 11.3, the exhaust system meets the objective of 10 CFR 50, Appendix I, and the limits of 10 CFR 20.

The main tunnel exhaust system takes suction from all levels of the main steam tunnel and discharges directly to the unit vent.

Both the auxiliary/fuel building normal exhaust system and the main steam tunnel exhaust system are monitored for activity, in accordance with the requirements of Regulatory Guide 1.21.

The emergency exhaust system serves the auxiliary building only following a LOCA to assure that all ECCS leakage to the auxiliary building atmosphere and the containment air purged via the hydrogen purge system are processed. All ductwork which is not required for operation of the emergency exhaust system and penetrates the auxiliary building boundary is automatically isolated. These nonessential systems are provided with two motor-operated dampers in a series arrangement at the boundary penetrations. These will close automatically following receipt of an SIS. The emergency exhaust system maintains a negative pressure of greater than or equal to 1/4 in. w.g. to assure that all leakage is into the building.

Each area containing safety-related equipment that is heat sensitive is provided with a local independent cooling unit. These cooling units utilize essential service water as the heat sink and are powered by the same Class IE supply as the associated equipment to be cooled.

The decontamination tanks exhaust scrubbers collect and remove the caustic vapors which evolve from the decontamination tanks. After processing the exhaust air, the scrubbers discharge to the auxiliary/fuel building normal exhaust system. Outside air is induced into the decontamination room for makeup when the scrubber(s) are in use.

Supplemental heating is provided by unit heaters located throughout the building.

The access tunnel transfer fan transfers air from the auxiliary building to the radwaste tunnel.

The I&C Hot Shop utilizes a room air-conditioner for cooling. The I&C Hot Shop room air-conditioner operates in a complete recirculation mode, however can be manually switched to a 100% exhaust mode as required.

An evaluation of the effects of the postulated inability to maintain preferred air flow patterns in the auxiliary building is summarized below:

a. Loss of Auxiliary Building Supply System

The auxiliary/fuel building normal exhaust system has the capability of operating at a reduced flow following the postulated loss of the supply system. Depending on physical resistance to building infiltration and fan characteristics, both exhaust fans may be operated in a parallel arrangement to maintain approximate design flow rates.

The ductwork distribution system is designed to supply directly to the clean areas, such as corridors, and exhaust from the potentially contaminated areas, such as equipment compartments. With the postulated loss of supply air, the exhaust pattern from the potentially contaminated areas is maintained. The source of makeup air is building infiltration which flows toward the potentially contaminated areas. Therefore, the effect of this event is negligible.

b. Loss of Auxiliary/Fuel Building Normal Exhaust System

The auxiliary/fuel building normal exhaust system is provided with redundant, full-capacity fans. However, assuming a loss of the exhaust air flow, the supply system automatically shuts down to prevent building pressurization. The supply fan is interlocked with the exhaust system so that the exhaust system must be operating before the supply system can be started or operated.

Therefore, a postulated loss of the exhaust system results in a complete loss of direct outside air movement within the auxiliary building. Natural air flow patterns may be established, depending on thermal gradients and the flow paths existing within and across the auxiliary building. Assuming uniform mixing of the auxiliary building atmosphere as the most conservative case, there would be negligible effect in relation to operator exposure if the ventilation system is returned to service within several hours. Actions are taken to remove unnecessary equipment from service if it contributes to personnel exposure in order to maintain exposures ALARA.

The loss of normal ventilation will have no impact on those areas with safety-related equipment. Other areas of the building are periodically monitored, depending upon operating loads and duration of the loss of ventilation, to determine the impact on equipment.

The equipment room housing the auxiliary building exhaust components is located on the operating floor which houses radioactively clean components. In addition, the exhaust fans are belt-driven centrifugal fans. The parts which are normally susceptible to wear include belts, motor drive, and bearings. These parts are readily available for replacement and can be easily installed within a few hours.

9.4.3.2.2 Component Description

Design data for major components of the auxiliary building HVAC systems are presented in Table 9.4-8. Codes and standards applicable to the auxiliary building HVAC systems are listed in Table 3.2-1. The pump room coolers, penetration room coolers, emergency exhaust system, and the safety-related penetrations of the auxiliary building boundaries are designed and constructed in accordance with codes and standards comparable with quality group C. The pump room cooler cooling coils and the penetration room cooler cooling coils are designed and constructed in accordance with quality group C.

NONESSENTIAL AIR HANDLING UNITS - Listed and described below are those nonessential air handling units which make up a part of the auxiliary building HVAC system.

The auxiliary building supply air unit consists of particulate filters, hot-water heating coil, chilled-water cooling coil, centrifugal fan, and electric motor driver.

The electrical equipment room fan coil units, the component cooling water pump room fan coil units, the ground floor fan coil unit, the hot machine shop/hot instrument shop fan coil unit, the normal charging pump room fan coil unit, and the basement corridor fan coil unit each consist of particulate filters, chilled-water cooling coil, centrifugal fan, and electric motor.

The I&C Hot Shop room air-conditioner consists of a particulate filter, a centrifugal blower, an electric motor driver, an evaporator, a compressor, and a condenser.

The decontamination tanks exhaust scrubbers consist of a stainless steel housing containing a water spray, filter media, and centrifugal fan with electric motor driver.

SAFETY-RELATED ROOM COOLERS - Those room coolers which provide safety-related cooling are described below.

The SI pump room coolers, the RHR pump room coolers, the component cooling water pump room coolers, the centrifugal charging pump room coolers, the containment spray pump room coolers, the auxiliary feedwater pump room coolers, and the penetration room coolers each consist of coils utilizing essential service water as the cooling medium, centrifugal fans, and electric motor drivers. Units which normally operate are provided with particulate filters.

NONESSENTIAL FILTER UNITS - The auxiliary building HVAC systems contain only one nonessential filter unit--the auxiliary/fuel building normal exhaust filter adsorber unit. This unit consists of moderate efficiency prefilters, HEPA filters, and charcoal adsorption beds.

SAFETY-RELATED FILTER UNITS - The auxiliary building HVAC systems contain no safety-related filter units. The emergency exhaust filter adsorber units are described in Section 9.4.2.2.2.

NONESSENTIAL FANS - There are four nonessential fans in the auxiliary building HVAC system. The auxiliary/fuel building normal exhaust fans, and the main steam tunnel exhaust fans are centrifugal fans with electric motor drivers. The access tunnel transfer fan is a propeller fan with an electric motor driver. The auxiliary building fume hood booster fan is a vane axial fan with an electric motor driver.

SAFETY-RELATED FANS - The auxiliary building HVAC systems contain no safety-related fans. The emergency exhaust system fans are described in Section 9.4.2.2.2.

SUPPLEMENTAL HEATING - Supplemental heating is supplied by electric duct heaters and electric and hot-water unit heaters.

Electric duct heaters are used in the scrubber makeup air ductwork in the decontamination room to ensure that minimum temperatures are maintained during winter operation.

The hot-water and electric unit heaters are located throughout the auxiliary building to provide supplemental heating. Each unit heater consists of a coil and a fan with an electric motor driver.

FIRE DAMPERS - Fire dampers are located between fire barriers, as necessary, to maintain the fire ratings of the barriers. Dampers are the 3-hour-rated curtain type.

ISOLATION DAMPERS - Where a means of system isolation is required, parallel-blade-type dampers are utilized. The type of operator employed is dependent upon the specific design and/or usage requirements.

FLOW CONTROL DAMPERS - Opposed-blade-type or single-blade-type dampers are utilized, as necessary, to provide a means of system balancing. In general, these are manually operated. However, some utilize power operators to allow compensation for changes occurring during system operation.

BACKDRAFT DAMPERS - Backdraft dampers are employed, where required, to maintain the proper direction of flow.

TORNADO DAMPERS - Tornado dampers are employed where isolation from the effects of extreme wind or tornado conditions is required. These dampers close with the flow produced by the differential pressure associated with tornadoes or high winds.

9.4.3.2.3 System Operation

GENERAL - The auxiliary building is served by two outside air supply units, one which serves all areas of the auxiliary building, except the main steam tunnel, and one which serves only the main steam tunnel.

Recirculation units (both essential and nonessential) are utilized throughout the building to supplement the outside air units' cooling (nonessential), provide cooling for the safety-related equipment, and minimize ductwork requirements.

Three exhaust systems serve the auxiliary building. The main steam tunnel exhaust system takes suction from the main steam tunnel and discharges to the atmosphere through the unit vent. The auxiliary/fuel building normal exhaust system takes suction from the potentially contaminated areas of the auxiliary building and processes it through a charcoal adsorber train prior to release through the unit vent. The emergency exhaust system exhausts from the auxiliary building following a LOCA and processes the air through a charcoal adsorber train prior to releasing it through the unit vent. The emergency exhaust system also exhausts a limited amount of air from the fuel building following a LOCA to prevent excessive negative pressure in the Auxiliary building.

The scrubbers exhaust through hoods over the decontamination tanks to remove the vapors which evolve from the tanks when in use. This air is cleaned and discharged to the auxiliary/fuel building normal exhaust system.

The access tunnel transfer fan transfers air from the auxiliary building to the clean side of the radwaste tunnel. This air is then exhausted through the hot side of the tunnel by the auxiliary/fuel building normal exhaust.

Cooling water for the nonessential air handlers is supplied by the central chilled water system (Section 9.4.10), and cooling water for the safety-related room coolers is supplied by the essential service water system (Section 9.2.1). Hot water for the supply air unit and the unit heaters is supplied by the plant heating system (Section 9.4.9).

Discussed below are the power generation operations and emergency operations of the auxiliary building HVAC systems. Shutdown operations are identical to the power generation operations.

POWER GENERATION OPERATION - Operation of the auxiliary building supply system, the auxiliary/fuel building normal exhaust system, the main steam tunnel supply system, and the main steam tunnel exhaust system is initiated manually from the control room. These systems operate continuously during normal plant operations.

The auxiliary building supply air unit draws in outside air, filters it through low efficiency particulate filters, either cooling with a chilled-water coil or heating with a hot-water coil, and distributes the conditioned air to the separate floors of the auxiliary building. In addition to the outside air cooling, local cooling is provided by supplemental fan-coil units which utilize chilled water coils for cooling. Space heating is provided by the outside air unit and unit heaters.

The heating or cooling mode of operation of the outside air supply unit is a function of the outside air temperature only. When the outside air temperature exceeds 65 F, conditioned outside air is supplied to the building. When the outside air temperature is between 65 and 50 F, unconditioned outside air is supplied to the building, and when the outside air temperature is below 50 F, the

heating system is operational. These operations are controlled by temperature switches, one associated with each coil, located in the ductwork upstream of the coils which sense the outside air temperature and function accordingly.

When the outside air temperature rises above 65°F, the temperature switch associated with the cooling system activates the supply unit cooling control system. This control system then functions to maintain a constant supply air temperature of 60°F by modulating the flow of chilled water to the coil.

While the outside air temperature is between 65 and 50°F, the supply unit continues to supply unconditioned air to the building.

When the outside air temperature falls below 50°F, the temperature switch associated with the heating coil activates the supply unit heating control system. The supply unit heating coil is supplied from a secondary hot-water loop. This arrangement is provided to prevent the possible freezeup of the coil when the outside air temperature falls below 32°F.

The supply unit heating control system consists of temperature transmitters, located on each level, which sense the corridor temperature and transmit a corresponding signal to a single temperature controller. When any one of these signals indicates that a corridor temperature is below 60°F, the temperature controller then increases the amount of heating from the supply unit heating coil to maintain a minimum of 60°F on all levels. The temperature controller controls the secondary loop temperature by regulating the amount of hot water which enters the secondary loop of the heating coil.

A temperature switch is provided in the supply air duct downstream of the outside air unit. This temperature switch will trip the supply unit, should the supply temperature drop below 40°F, to protect the coils from freezing.

The previous description of the operation of an auxiliary building air unit is, in general, applicable to the main steam tunnel supply air unit. However, cooling is provided as a function of exhaust temperature only and the setpoint for heating may be higher than 50°F to minimize the variation of the area temperature.

The auxiliary building supply air system and the main steam enclosure supply air system intakes are in a penthouse atop the auxiliary building, which is located approximately 15 feet below and 135 feet horizontally from the diesel exhaust discharge point. This separation is sufficient to provide significant dilution of the diesel exhaust gases; therefore, operation of the diesel during normal plant operations will result in no ingestion of exhaust gases into the auxiliary building.

The basement corridor fan coil unit, the normal charging pump room fan coil unit, the hot instrument and hot machine shop fan coil unit, the ground floor fan coil unit, the component cooling water pump room's fan coil units, and the electrical equipment room fan coils units operate to provide supplemental cooling of the auxiliary building. The operation of these units is controlled by a temperature switch located in the respective room and/or area served. This switch activates the unit fan when the room or area temperature exceeds the design limits. The basement corridor fan coil unit, the normal charging pump fan coil unit, the ground floor corridor fan coil unit, the electrical equipment room fan coil unit (SGL02), and the component cooling water pump room fan coil unit temperature switches are set to initiate operation of the unit when the room temperature increases and to stop the unit when the room temperature falls below setpoint with the exception of the temperature switch for the electrical equipment room fan coil unit (SGL02). The second electrical equipment room fan coil unit (SGL20) operates continuously with the chilled water flow regulated to control the cooling of the unit. The two electrical equipment room fan coil units (SGL02 and SGL20) operate in parallel to maintain the room temperature at or below 80°F. The hot machine/hot instrument shop fan coil unit switches are set to initiate operation of the cooler when the space temperature exceeds 80°F and to stop the cooler when the temperature falls below 75°F. The NCP room cooler is oversized for normal plant operating conditions (normally <104°F ambient). To prevent high cycling of the cooling fan and premature tripping of the motor thermal overloads, cooling flow is reduced to the low end of the allowable flow band and set the room thermostat low enough to ensure extended fan run times. This ensures the room temperature does not exceed the high and low limits during pump operation and when the pump is secured.

Supplemental heating is provided by unit heaters located in the basement corridor, the hot machine shop, the decontamination room, the hot instrument shop, the intermediate floor corridor, the auxiliary building operating floor HVAC equipment room, the containment personnel access area, the boric acid storage tanks area, pipe chase and filter valve gallery. Each heater is sized for its specific location and is thermostatically controlled to maintain the space design temperature requirements of 60°F or above. The boric acid storage tank area, pipe chase, and the boric acid filter valve gallery unit heaters maintain a space temperature of 75°F or above to prevent crystallization of the 4-weight-percent boric acid in the tanks and/or lines.

The auxiliary building supply air unit intake, the auxiliary/fuel building normal exhaust system discharge and the auxiliary/fuel building normal exhaust system, the emergency exhaust system, the access tunnel transfer fan, the hot machine shop/hot instrument shop fan coil unit, and the decontamination tanks exhaust scrubbers exhaust line penetrations of the auxiliary building boundaries contain tornado dampers capable of withstanding the effects of extreme wind or tornado conditions (3 psi total at a rate of 2 psi per second per Regulatory Guide 1.76). These dampers close with the flow produced by the differential pressure associated with tornadoes or high winds. The dampers located in those systems whose normal flow is in the same direction as would be the flow produced by the differential pressure are spring loaded to prevent closure during normal system operations. Missile barriers are provided externally to the isolation system to prevent propagation of a tornado missile.

Each pump room is provided with an individual cooler. Each penetration room cooler serves one electrical penetration room. The pump room coolers and the penetration room coolers are completely contained within their respective spaces and form closed loop systems.

The pump room coolers may be operated manually during occupation of the room but normally operate only in conjunction with the pump motors they serve. The pump room coolers start automatically upon initiation of the respective pumps.

Operation of the penetration room coolers is controlled by a handswitch or SIS.

One of the two auxiliary/fuel building normal exhaust fans runs continuously during normal plant operations. The standby fan is designed to start either automatically on failure of the operating fan or on manual initiation.

A differential pressure indicator controller, located across the charcoal adsorber, modulates a damper downstream of the filter train to maintain a constant system resistance as the filters load up. This control arrangement will assure a constant system flow. Exhaust hoods are provided over the decontamination spray booth located in the decontamination room and the sample sink located in the auxiliary building sample room. Exhaust flow through the sample room hood is constant whether the sink is in use or not.

An individual exhaust hood is provided over each of the decontamination tanks. During normal operation, exhaust is limited to one larger hood (3200 cfm) or two small hoods (1600 cfm each). Use is limited due to the quantities of air required for fume control over the tanks. Operation of the scrubbers is provided manually by means of handswitches located in the decontamination room. When each scrubber is in use, a corresponding damper, located in ductwork downstream of an outside air louver, opens to provide makeup air for the scrubber. Located in the makeup air ductwork is a heating coil which, when the outside air temperature is below 60 F, tempers the entering air to maintain it at a minimum of 60 F. An audible alarm is provided in the decontamination room and a pressure switch is provided in the water supply line for each scrubber to prevent operation of the scrubber and to alarm the operator if there is no water flow to the scrubbers. This feature is provided to prevent damage to those auxiliary/fuel building normal exhaust system components located downstream of the scrubbers.

The main steam tunnel exhaust system operation is initiated manually. One of the two main steam enclosure building exhaust fans runs continuously during normal plant operation. The standby fan is designed to start either automatically on failure of the operating fan or on manual initiation. The motor-operated discharge isolation dampers (one associated with each fan) operate in conjunction with their corresponding fans.

The auxiliary building ductwork infiltration air isolation system consists of two dampers in a series arrangement in each system which penetrates the auxiliary building and must be isolated following a LOCA. Each damper of a pair is powered from a separate Class IE source to assure closure and will close automatically upon receipt of an SIS.

In the event of a radioactive release from a fuel handling accident in the fuel building, the portion of the auxiliary/fuel building normal exhaust system serving the fuel building is automatically isolated, and the operating auxiliary/fuel building normal exhaust fan is manually switched to the low speed to maintain the exhaust flow from the auxiliary building.

The charcoal adsorber train is monitored for charcoal bed temperature. Should the bed temperature exceed 200 F, an alarm is received in the control room to alert the operators of excessive bed heating. Should the bed temperature continue to rise and exceed 300 F, a second alarm is received in the control room. To prevent backflow through the system, upstream isolation is provided by a backdraft damper located at the inlet to the filter train. All particulate and HEPA filter banks are provided with local differential pressure indication and differential pressure switches which will alarm excessive pressure drops via the plant computer.

In the event of a fire, the auxiliary/fuel building normal exhaust system can function to purge the auxiliary building of smoke.

Based on the outside air design conditions, as described in Table 9.4-1, design space heat loads, and operation of the auxiliary building HVAC systems as described above, the relative humidity in the auxiliary building will not normally exceed 70 percent.

Following a loss of offsite power, certain areas of the auxiliary building will experience temperatures higher than their normal ambient design temperatures. These areas and their resultant temperatures are given in Table 3.11(B)-1. In none of the affected areas does the temperature increase affect either the safe operation or the ability to achieve and maintain the safe shutdown of the plant.

I&C HOT SHOP AIR-CONDITIONING UNIT - The I&C Hot Shop room air-conditioner is manually initiated from the unit's control panel. The room air-conditioner is controlled by the unit thermostat, which cycles the compressor. The room temperature is limited to a maximum of 78 F. Room occupants can manually adjust the unit's fan speed and may switch from complete recirculation to 100% exhaust as necessary.

EMERGENCY OPERATION - In the event of a LOCA, those systems which penetrate the auxiliary building boundaries (excluding the emergency exhaust system) are automatically isolated and the emergency exhaust system is automatically started. The emergency exhaust system takes suction on all levels of the auxiliary building and processes the exhaust air through the emergency exhaust charcoal adsorption train (Section 9.4.2) for cleanup prior to monitoring and discharge through the unit vent. The emergency exhaust system also exhausts a limited amount of air from the fuel building following a LOCA to prevent excessive negative pressure in the auxiliary building.

Following a LOCA, if the hydrogen purge system is used, the air purged from the containment is ducted to the emergency exhaust system for processing and release through the unit vent. To protect the ductwork system from over-pressurization and to provide a means of maintaining the hydrogen purge system flow within design limits, a globe valve is located downstream of the outboard hydrogen purge containment isolation valve. The portion of the system between the outboard isolation valve and the globe valve is piping, and the portion after the globe valve is ductwork. The valve is located in the south electrical penetration room and is locked throttled to provide a purge flow of 100 scfm at a containment pressure of 4 psig. Provided immediately downstream of the globe valve is a pressure indicator for monitoring system pressure.

9.4.3.3 Safety Evaluations

Safety evaluations are numbered to correspond to the safety design bases in Section 9.4.3.1.

SAFETY EVALUATION ONE - The safety-related portions of the auxiliary building HVAC systems are located in the auxiliary and fuel buildings. These buildings are designed to withstand the effects of earthquakes, tornadoes, hurricanes, floods, external missiles, and other appropriate natural phenomena. Sections 3.3, 3.4, 3.5, 3.7(B), and 3.8 provide the bases for the adequacy of the structural design of these buildings.

SAFETY EVALUATION TWO - The safety-related portions of the auxiliary building HVAC systems are designed to remain functional after a SSE. Sections 3.7(B).2 and 3.9(B) provide the design loading conditions that were considered. Sections 3.5 and 3.6 provide the hazards analyses to assure that a safe shutdown, as outlined in Section 7.4, can be achieved and maintained.

SAFETY EVALUATION THREE - The design of the auxiliary building HVAC systems provides complete redundancy and, as indicated by Table 9.4-9, no single failure can compromise the system's safety functions. All vital power can be supplied from either onsite or offsite power systems, as described in Chapter 8.0.

SAFETY EVALUATION FOUR - The pump room coolers, the penetration room coolers, the emergency exhaust system, and the auxiliary building isolation provisions are initially tested with the program given in Chapter 14.0. Periodic in-service functional testing is done in accordance with Section 9.4.3.4. Section 6.6 provides the ASME Boiler and Pressure Vessel Code, Section XI requirements that are appropriate for the pump room and the penetration room coolers.

SAFETY EVALUATION FIVE - Section 3.2 delineates the quality group classification and seismic category applicable to the safety-related portions of the auxiliary building HVAC systems. All the power supplies and control functions necessary for safe function of the pump room coolers, penetration room coolers, emergency exhaust system, and auxiliary building isolation provisions are Class IE, as described in Chapters 7.0 and 8.0.

SAFETY EVALUATION SIX - Section 9.4.3.2.3 describes the provisions made to assure the isolation of the auxiliary building following a DBA.

SAFETY EVALUATION SEVEN - The emergency exhaust system maintains a negative pressure in the auxiliary building of not less than 1/4 inch w.g., following a LOCA. The system collects and processes potential ECCS leakages and the effluent purged from the containment via the hydrogen purge system. The system is monitored for radioactivity upstream of the filter adsorber unit prior to release through the unit vent.

SAFETY EVALUATION EIGHT - The ESF pump rooms coolers have sufficient cooling capacity to maintain the ESF pump rooms at 122 F or below when the ESF pumps are operating at rated load.

9.4.3.4 Tests and Inspections

Preoperational testing is described in Chapter 14.0. Filters and adsorbers located within the auxiliary/fuel building normal exhaust filter adsorber unit are tested in the manufacturer's shop, after initial installation, and subsequent to each filter or adsorber change. Interim tests and inspections are performed annually in accordance with the requirements of Regulatory Guide 1.140.

All charcoal adsorbers are factory tested in accordance with RDT-M-16-IT to exhibit a decontamination efficiency of no less than 99.9 percent for elemental iodine and 98 percent for methyl iodide. Sample charcoal canisters are tested for impregnant efficiency in an independent laboratory, using radiomethyl iodide tracers. Inplace testing is performed with a suitable refrigerant in accordance with the procedures set forth in ANSI N510.

Prefilters do not undergo factory or inplace testing since no credit is taken for removal of particulates.

HEPA filters are factory tested with monodispersed DOP aerosol to demonstrate a minimum particulate removal efficiency of no less than 99.97 percent for 0.3 micron particulates. Inplace leak testing is carried out with cold polydisperse DOP. Testing is in accordance with the procedures set forth in ANSI N510.

All safety-related systems and boundary isolation provisions undergo preoperational testing prior to plant startup. All nonsafety-related systems underwent acceptance testing prior to plant startup.

One fan in each group of identical safety-related fans (pump room coolers and penetration room coolers) is tested in accordance with AMCA Standards. All other fans are AMCA rated.

Major components are accessible during normal plant operation for inspection, maintenance, and periodic testing.

9.4.3.5 Instrumentation Applications

The auxiliary/fuel building normal exhaust fans, the emergency exhaust fans, the main steam enclosure building exhaust fans, the auxiliary building supply air unit fan, and the main steam enclosure building supply air unit fan are operable from the control room and have indication of operation status in the control room. All other fans are locally operable by manual and/or automatic means by association with a pump start or thermostat.

An indication of the position of all isolation dampers is provided in the control room.

Thermostats, located in both the various levels of the building and the HVAC ductwork, control space temperatures.

The amount of filter loading for all filters associated with both the air handlers and the filter adsorbers is available at the unit.

All instrumentation provided with the auxiliary/fuel building normal exhaust filter adsorber unit is as required by Regulatory Guide 1.140.

High temperature alarms for each of the ESF pump rooms and the electrical penetration room are provided in the control room.

Low water flow to the scrubbers is alarmed in the decontamination room. The scrubbers are operable from the decontamination room.

9.4.4 TURBINE BUILDING HVAC

The turbine building HVAC systems consist of the main building heating and ventilation systems, the lube oil room ventilation and heating system, the computer room HVAC system, the instrument shop HVAC system, the condenser air removal filtration system, the battery room ventilation and cooling system, and the EHC cabinet room air-conditioning system, and the Oxygen control and pH control chemical storage room air-conditioning.

The main building ventilation system provides outside air for ventilation and cooling for each level of the turbine building. The main building ventilation system serves the turbine building, the communication corridor, and the battery rooms.

The lube oil room ventilation and heating system provides outside air for ventilation and cooling or heating, as required, for the equipment within the lube oil room.

The computer room HVAC system provides a suitable environment for the equipment and personnel comfort.

The instrument shop HVAC system provides a suitable environment for personnel comfort.

The condenser air removal filtration system collects and processes the noncondensables from the condenser.

The battery room cooling and ventilation system serves to dilute the hydrogen emitted from the batteries.

The EHC cabinet room air-conditioning system provides a suitable environment for the equipment.

9.4.4.1 Design Bases

9.4.4.1.1 Safety Design Bases

The turbine building HVAC systems serve no safety function; however, those dampers and ductwork in the condenser air removal filtration system which are required to provide isolation of the

auxiliary building are safety-related and are required to function following a DBA and to achieve and maintain the plant in a post accident safe shutdown condition.

SAFETY DESIGN BASIS ONE - The auxiliary building isolation provisions are protected from the effects of natural phenomena, such as earthquakes, tornadoes, hurricanes, floods, and external missiles (GDC-2). The isolation provisions for the auxiliary building remain functional after a safe shutdown earthquake and perform their intended function following a postulated hazard, such as internal missiles, or pipe break (GDC- 4).

SAFETY DESIGN BASIS TWO - The safety functions of the condenser air removal filtration system can be performed, assuming a single active component failure coincident with the loss of offsite power.

SAFETY DESIGN BASIS THREE - Active components of the condenser air removal filtration system are capable of being tested during plant operation.

SAFETY DESIGN BASIS FOUR - The safety-related auxiliary building isolation provisions are consistent with the quality group classification assigned by Regulatory Guide 1.26 and with the seismic category assigned by Regulatory Guide 1.29. The power supply and control functions must be in accordance with Regulatory Guide 1.32.

9.4.4.1.2 Power Generation Design Bases

POWER GENERATION DESIGN BASIS ONE - The main building ventilation system supplies outside air for ventilation and cooling to maintain the turbine building average ambient temperature below 110 F. The main building heating system is designed to maintain the average ambient temperature above 60 F.

POWER GENERATION DESIGN BASIS TWO - The lube oil room ventilation and heating system supplies outside air for cooling or heating, as required, to maintain the lube oil room average ambient temperature between 60 F and 110 F.

POWER GENERATION DESIGN BASIS THREE - The Operations Relief Area HVAC system maintains the average room temperature between 60 F and 72 F and a relative humidity of 50 ± 10 percent. Full-capacity, redundant air-conditioning units are provided.

The majority of plant computer equipment has been removed from the computer room. The area has been converted to office space. The HVAC system has been modified to accommodate the reduced heat load now in the area. The HVAC system for the room is controlled by a thermostat and is set by personnel occupying the room.

POWER GENERATION DESIGN BASIS FOUR - The instrument shop HVAC system maintains the average room temperature between 60 F and 78 F.

POWER GENERATION DESIGN BASIS FIVE - The ventilation exhaust systems are designed to meet the requirements of the discharge concentration limits of 10 CFR 20 and the as-low-as-reasonably-achievable dose objective of 10 CFR 50, Appendix I. No filtration of the main turbine building exhaust is required. The condenser air removal filtration system charcoal adsorption train complies with Regulatory Guide 1.140 to the extent discussed in Table 9.4-3.

POWER GENERATION DESIGN BASIS SIX - The condenser air removal filtration system monitors radioactivity in accordance with Regulatory Guide 1.21.

POWER GENERATION DESIGN BASIS SEVEN - The battery room cooling and ventilation system maintains the average ambient temperature between 60°F and 90°F.

POWER GENERATION DESIGN BASIS EIGHT - The EHC cabinet room air-conditioning and ventilation system limits the temperature to a maximum of 80°F.

POWER GENERATION DESIGN BASIS NINE - The Oxygen control and pH control chemical Storage Room Air-Conditioning System provides adequate cooling to maintain the room temperature below 75°F.

9.4.4.2 System Description

9.4.4.2.1 General Description

Figure 9.4-4 shows the flow diagram of the turbine building HVAC systems.

The main building ventilation system utilizes outside air as a cooling medium. Air is distributed throughout the turbine building and communication corridor by supply units located on the periphery of the building. Outside air, supplied directly, provides cooling for the summer months. During the winter months of plant operation, a reduced quantity of outside air is required for building cooling. The outside air is mixed with turbine building (recirculated) air for tempering during this mode of operation. During plant shutdown in the winter, heating is provided by strategically located electric and hot water unit heaters.

The turbine building air is exhausted to the atmosphere by exhaust fans located within louvered penthouses on the roof.

Smoke removal in the turbine building in the event of a fire is discussed in Section 9.5.1.

The battery rooms are ventilated by a branch duct from the outside air supply units. A chilled-water coil is provided within the supply air duct to maintain the temperature conditions within these rooms. The rooms are pressurized slightly by the supply air

and relieved through a transfer grille into the turbine building. The rate of supply air into the battery rooms is sufficient to dilute the hydrogen emitted from the batteries to a value well below the flammability, and, hence, the explosive limits.

The lube oil room ventilation system utilizes outside air as a cooling medium. A heating coil is provided for tempering the outside air during winter plant operation and plant shutdown. The lube oil room is exhausted to the atmosphere.

The computer room HVAC system utilizes chilled water for cooling and dehumidification, a hot-water coil for heating, and a humidifier. The computer room air-conditioning unit operates in a complete recirculation mode. Fresh air is provided by a branch duct from an outside air supply unit (servicing the communication corridor) and is relieved through a transfer grille.

The condenser air removal filtration system collects and processes the noncondensables from the condenser (through the mechanical vacuum pumps) and other potential sources of radioactivity. The effluents from these components are diluted with turbine building air, approximately 10 to 1, upstream of the filtration unit to dilute the concentration of noble gases, and moisture content. The condenser air removal filtration system is monitored for radioactivity upstream of the adsorber train. Redundant fans are provided to assure system reliability. The condenser air removal filtration system discharges through the unit vent after processing through the adsorber train.

Based on the source terms provided in Section 11.1 and the dose evaluation provided in Section 11.3 the exhaust systems meet the objective of 10 CFR 50, Appendix I, and the limits of 10 CFR 20.

The instrument shop air-conditioning system utilizes chilled water for cooling. The instrument shop air-conditioning unit operates in a complete recirculation mode. Fresh air is provided by a branch duct from an outside air supply unit (servicing the communication corridor) and is relieved through a transfer grille.

The EHC cabinet room air-conditioning system utilizes two direct – expansion (DX) rooftop air conditioners for cooling. Each EHC cabinet room air conditioner has a manual damper for operation in full recirculation mode or with a mix of up to 50% outside air.

The Oxygen control and pH control chemical storage room air-conditioning system utilizes a room air-conditioner for cooling.

9.4.4.2.2 Component Description

Codes and standards applicable to turbine building ventilation systems are listed in Tables 3.2-1 and 9.4-10.

The turbine building ventilation systems are designed and constructed in accordance with codes and standards comparable with quality group D.

AIR HANDLING UNITS - Each main building supply unit consists of a fan section, a medium-capacity filter box (with provisions for future filters), and an electric motor driver. Some units are also equipped with mixing boxes.

The communication corridor supply unit consists of a fan section, a medium-capacity filter box, a mixing box, and an electric motor driver.

The lube oil room supply air unit consists of particulate filters, a hot-water heating coil, a centrifugal fan, and an electric motor driver.

Each computer room fan-coil unit consists of particulate filters, a chilled-water cooling coil, a hot-water heating coil, a humidifier, a centrifugal fan, and an electric motor driver.

The instrument shop fan-coil unit consists of particulate filters, a chilled-water cooling coil, a centrifugal fan, and an electric motor driver. An electric duct heater provides heating.

Each EHC cabinet room air conditioner consists of particulate filters, a refrigerant coil, a direct drive plenum fan, and an electric motor driver.

ROOM AIR CONDITIONERS - The Oxygen control and pH control chemical storage room air-conditioner consists of a particulate filter, a centrifugal blower, an electric motor driver, an evaporator, a compressor, and a condenser.

COOLING COILS - Each battery room cooling coil is chilled-water type.

FILTER UNIT - The condenser air removal filtration unit consists of moderate efficiency prefilters, HEPA filters, and charcoal adsorption beds.

FANS - The main building exhaust fans are vaneaxial fans with electric motor drivers.

The lube oil room and condenser air removal system exhaust fans are centrifugal fans with electric motor drivers.

The toilet areas and the elevator machine room exhaust fans are centrifugal fans with electric motor drivers.

UNIT HEATERS - Hot-water unit heaters are used to provide heating in the main building. Electric unit heaters provide heating in the stairwells. Each unit heater consists of a coil and a fan with an electric motor driver.

FIRE DAMPERS - Fire dampers are located in fire barriers as necessary to maintain the fire rating of the barriers. Dampers are the 3-hour-rated curtain type.

ISOLATION DAMPERS - Where a means of system isolation is required, parallel-blade-type dampers are utilized. The type of operator used is dependent upon the specific design and/or usage requirements.

FLOW CONTROL DAMPERS - Opposed-blade-type dampers are utilized, as necessary, to provide a means of system balancing.

BACKDRAFT DAMPERS - Backdraft dampers are employed, where required, to maintain the proper direction of air flow.

TORNADO DAMPERS - Tornado dampers are employed where isolation from the effects of extreme wind or tornado conditions is required. These dampers close with the flow produced by the differential pressure associated with the tornado or high winds.

Further information regarding the turbine building ventilation system components is provided in Table 9.4-10.

9.4.4.2.3 System Operation

MAIN BUILDING HEATING AND VENTILATION SYSTEM - During the summer mode of operation, the system utilizes 100 percent outside air for cooling, with all supply units operating. During the winter mode of system operation with the plant operating, only selected outside air supply units are operating, and these are in a partial recirculation mode. Likewise, the number of exhaust fans operating is reduced to correspond to the outside air requirements during this mode of system operation. During the winter mode of operation, six supply units, two per floor, operate in a partial recirculation mode in conjunction with the two small roof exhaust fans. Unit heater operation may be initiated to provide supplemental heating in low equipment heat load areas. The turbine building is maintained between 60 and 110 F.

Unit heaters are provided for building heating during plant shutdown. Hot water is utilized as the heating medium. The unit heaters are controlled by local thermostats which energize the heater whenever the building temperature reaches 60 F.

BATTERY ROOM COOLING AND VENTILATION SYSTEM - The branch ducts from the main building ventilation system to the battery rooms are provided with chilled-water coils for cooling. The battery rooms are maintained between 60 and 90 F.

LUBE OIL ROOM VENTILATION AND HEATING SYSTEM - The lube oil room is served by independent supply and exhaust ventilation systems. The lube oil supply system takes suction from the outside and supplies it directly to the space. Cooling is accomplished by the outside air. A hot-water heating coil, located in the supply system, provides the required heating. The lube oil room exhaust system takes suction from the space and discharges it directly to the atmosphere. The lube oil room is maintained between 110 and 60 F.

While the outside air temperature is above 60 F, the lube oil supply air unit continues to operate, supplying outside air to the building.

When the outside air temperature falls below 60 F, the temperature switch associated with the heating coil activates the supply unit heating control system. The supply unit heating coil is supplied from a secondary hot-water loop which is, in turn, supplied from the plant heating system.

The lube oil room supply unit heating control system consists of a temperature controller. When the temperature is below 60 F, the temperature controller modulates the amount of heating accordingly. The temperature controller controls the secondary loop temperature by regulating the amount of hot water which enters the secondary loop of the heating coil.

A temperature switch located downstream of the coil is provided to trip the supply air unit, should the supply air temperature drop below 40 F, to protect the coil from freezing.

Operations Relief Area HVAC SYSTEM – The majority of plant computer equipment has been removed from the computer room and this area has been turned into an office space. The HVAC for this room is controlled by a thermostat. The thermostat controls cooling and heating by modulating the respective three-way mixing valves. The room temperature will be controlled by the personnel occupying this room.

INSTRUMENT SHOP HVAC SYSTEM - The instrument shop air conditioning unit is controlled by a room thermostat which cycles the supply fan. Cooling is accomplished by circulating chilled water through the cooling coil. The required heating is provided by an electric duct heater located in the outside air branch duct serving the room. The room temperature is maintained between 60 and 78 F.

CONDENSER AIR REMOVAL FILTRATION SYSTEM - The condenser air removal filtration system is manually initiated by a local handswitch. One of the two exhaust fans runs continuously during normal operations. The standby fan is designed to start either automatically on failure of the operating fan or on manual initiation.

A differential pressure-indicating controller, located across the charcoal adsorber, modulates a damper downstream of the filter train to maintain a constant system resistance as the particulate filters load up. This control arrangement will assure a constant system flow.

EHC CABINET ROOM AIR-CONDITIONING AND VENTILATION SYSTEM - The EHC cabinet room air conditioners are manually initiated from a single control panel. The room air conditioners are controlled by the temperature switches, which cycle the compressors. The room temperature is limited to a maximum of 80°F.

OXYGEN CONTROL AND PH CONTROL CHEMICAL STORAGE ROOM AIR-CONDITIONING SYSTEM - The Oxygen control and pH control chemical storage room air-conditioning is manually initiated from the unit control panel. The room air-conditioner is controlled by the unit thermostat, which cycles the compressor. The room temperature is limited to a maximum of 75°F.

9.4.4.3 Safety Evaluation

Safety evaluations are numbered to correspond to the safety design bases in Section 9.4.4.1.

SAFETY EVALUATION ONE - The safety-related portions of the condenser air removal filtration system are located in the auxiliary building. This building is designed to withstand the effects of earthquakes, tornadoes, hurricanes, floods, external missiles, and other appropriate natural phenomena. Sections 3.3, 3.4, 3.5, 3.7(B), and 3.8 provide the bases for the adequacy of the structural design of this building. The safety-related portions of the condenser air removal filtration system are designed to remain functional after a SSE. Sections 3.7(B).2 and 3.9(B) provide the design loading conditions that were considered. Sections 3.5 and 3.6 provide the hazards analyses to assure that a safe shutdown, as outlined in Section 7.4, can be achieved and maintained.

SAFETY EVALUATION TWO - The design of the safety-related portions of the condenser air removal filtration system provides complete redundancy, and no single failure compromises the system's safety functions. All vital power can be supplied from either onsite or offsite power system as described in Chapter 8.0.

SAFETY EVALUATION THREE - The auxiliary building isolation provisions are initially tested with the program given in Chapter 14.0. Periodic in-service functional testing is done in accordance with Section 9.4.4.4.

SAFETY EVALUATION FOUR - Section 3.2 delineates the quality group classification and seismic category applicable to the safety-related portions of the condenser air removal filtration system. All the power supplies and control functions necessary for safe function of the auxiliary building isolation provisions are Class 1E, as described in Chapters 7.0 and 8.0.

9.4.4.4 Tests and Inspections

Preoperational testing is described in Chapter 14.0.

Filters and adsorbers for the condenser air removal filtration system are tested in the shop, after initial installation, and subsequent to each filter or adsorber change. Following installation of the filters and adsorbers, interim tests and inspections are performed in accordance with the requirements of Regulatory Guide 1.140.

Charcoal adsorbers are qualified per Regulatory Guide 1.140. Charcoal batch samples are factory tested with radiomethyl iodide tracers at 25 C and 70 percent relative humidity to exhibit a decontamination efficiency of no less than 99.9 percent for elemental iodine and 98 percent for methyl iodide. Sample charcoal is tested for impregnant efficiency in an independent laboratory using radiomethyl iodide tracers. Inplace testing is performed with a suitable refrigerant, in accordance with the procedures set forth in ANSI N510, to check for bed bypass leakages.

Prefilters do not undergo factory or inplace testing since no credit is taken for removal of particulates.

HEPA filters are factory tested with monodispersed DOP aerosol to demonstrate a minimum particulate removal efficiency of no less than 99.97 percent for 0.3 micron particulates. Inplace leak testing is carried out with cold polydispersed DOP. Testing is in accordance with the procedures set forth in ANSI N510.

Major components are accessible during normal plant operation for inspection, maintenance, and periodic testing.

All safety-related boundary isolation provisions underwent preoperational testing prior to plant start-up.

9.4.4.5 Instrumentation Applications

Indication of condenser air removal system exhaust fan operational status is provided in the control room.

An indication of the position of all building isolation dampers associated with the condenser air removal filtration system is provided in the control room.

A temperature-sensor element is provided for the charcoal adsorber to indicate excessive bed heating.

An alarm is provided in the control room to indicate high radiation in the condenser air removal filtration system.

All instrumentation provided with the filter/adsorber unit is as required by Regulatory Guide 1.140.

Thermostats, located in the various levels, control space temperature.

Local differential pressure indication is provided across each particulate filter bank.

9.4.5 RADWASTE BUILDING HVAC

The radwaste building HVAC system functions to provide a suitable atmosphere for equipment and personnel occupation.

9.4.5.1 Design Bases

9.4.5.1.1 Safety Design Bases

This system serves no safety function. Failure of the system does not affect safe shutdown of the plant.

9.4.5.1.2 Power Generation Design Bases

POWER GENERATION DESIGN BASIS ONE - The radwaste building HVAC system provides fresh air ventilation at a rate of at least 0.1 cfm per square foot of floor area.

POWER GENERATION DESIGN BASIS TWO - The radwaste building HVAC system maintains the temperature in the control rooms, the sample laboratory, and drumming area between 60 and 85 F. All other areas of the building are maintained between 60 and 104 F.

POWER GENERATION DESIGN BASIS THREE - The exhaust system inhibits exfiltration by exhausting approximately 10 percent more air than is being supplied to the building, the difference being made up by infiltration into the building.

POWER GENERATION DESIGN BASIS FOUR - The ventilation exhaust system is designed to meet the requirements of the discharge concentration limits of 10 CFR 20 and the ALARA dose objective of 10 CFR 50, Appendix I. The charcoal adsorption train complies with Regulatory Guide 1.140 to the extent discussed in Table 9.4-3.

9.4.5.2 System Description

9.4.5.2.1 General Description

The radwaste building heating, ventilating, and air-conditioning system shown in Figure 9.4-5 consists of fans, heating coils, cooling coils, a filter train, and its associated ductwork, dampers, and controls. Local unit heaters are used to provide supplemental heating. Fan-coil units are used for cooling the evaporator rooms, control rooms, and the sample laboratory. Local fan-coil units are used to provide additional supplemental cooling.

The radwaste building is served by an outside air supply system which provides fresh cooled or heated air to each of the various levels of the building.

The radwaste building exhaust system takes suction from all levels of the radwaste building, processes the exhaust through the filter adsorber train, and discharges it through the building vent. The building vent extends 10 feet above the roof of the radwaste building. Radiation monitors are provided to sample effluents. All exhaust air from the radwaste building is through the radwaste building exhaust system.

The radwaste building exhaust system is designed to inhibit exfiltration. Air flow patterns are from areas of potentially lesser contamination to areas of greater contamination.

Based on the source terms provided in Section 11.1 and the dose evaluation provided in Section 11.3, the exhaust system meets the objective of 10 CFR 50, Appendix I, and the limits of 10 CFR 20.

9.4.5.2.2 Component Description

Codes and standards applicable to the radwaste building HVAC system are listed in Tables 3.2-1 and 9.4-11.

The radwaste building HVAC systems are designed and constructed in accordance with codes and standards comparable with quality group D.

SUPPLY AIR UNIT - The radwaste building supply air unit consists of particulate filters, a hot-water heating coil, a chilled-water cooling coil, a centrifugal fan, and an electric motor driver.

RECIRCULATION UNITS - Fan-coil units are used to provide the cooling for the evaporator rooms, control rooms, and sample laboratory. Local fan-coil units are used to provide supplemental cooling of the basement and ground floors. Each unit consists of particulate filters, a chilled-water cooling coil, a centrifugal fan, and an electric motor driver. The main control room fan-coil unit is also provided with a hot-water heating coil to provide heating.

FILTER UNIT - The radwaste building filtration unit consists of moderate efficiency prefilters, HEPA filters, and charcoal adsorption beds.

FANS - The radwaste building exhaust fans are centrifugal fans with electric motor drivers.

The access tunnel transfer fan is a propeller type with an electric motor driver.

UNIT HEATERS - Hot-water unit heaters are used to provide supplemental heating. Each unit heater consists of a coil and a fan with an electric motor driver.

FIRE DAMPERS - Fire dampers are located in fire barriers, as necessary, to maintain the fire rating of the barriers. Dampers are the 3-hour-rated curtain type.

ISOLATION DAMPERS - Where a means of system isolation is required, parallel-blade-type dampers are utilized. The type of operator used is dependent upon the specific design and/or usage requirements.

FLOW CONTROL DAMPERS - Opposed-blade-type dampers are utilized, as necessary, to provide a means of system balancing.

BACKDRAFT DAMPERS - Backdraft dampers are employed, where required, to maintain the proper direction of air flow.

9.4.5.2.3 System Operation

The radwaste building supply air unit is started manually. The supply air unit draws in outside air, filters it through low efficiency particulate filters, either cooling with a chilled-water coil or heating with a hot-water coil, and distributes the conditioned air to the various floors of the radwaste building.

Fan-coil units are used for cooling the evaporator rooms, control rooms, and sample laboratory. Local fan-coil units are used to provide supplemental cooling in the basement and ground floors. Space heating is provided by the outside air unit and local unit heaters.

The heating or cooling mode of operation of the outside air supply unit is controlled by the outside air temperature. When the outside air temperature exceeds 80 F, chilled-water cooled outside air is supplied to the building. When the outside air temperature is between 48 and 80 F, unconditioned outside air is supplied to the building. When the outside air temperature is below 48 F, the heating system is operational. These operations are controlled by temperature switches, one associated with each coil, located in the ductwork upstream of the coils, which sense the outside air temperature and function accordingly.

When the outside air temperature rises above 80 F, the temperature switch associated with the cooling system activates the supply unit cooling control system. This control system then functions to maintain a constant supply air temperature of 75 F by modulating the flow of chilled water to the coil.

While the outside air temperature is between 48 and 75 F, the supply unit continues to supply unconditioned air to the building.

When the outside air temperature falls below 48 F, a temperature switch activates the supply unit heating control system. The supply unit heating coil is supplied from a secondary hot-water loop which is, in turn, supplied from the plant heating system.

The supply unit heating control system consists of temperature transmitters, located on each level, which sense the corridor temperature and transmit a corresponding signal to a single temperature controller. When any one of these signals indicates that a corridor temperature is below 60 F, the temperature controller then modulates the amount of heating accordingly. The temperature controller controls the secondary loop temperature by regulating the amount of hot water which enters the secondary loop of the heating coil.

A temperature switch is provided downstream of the coils. This temperature switch trips the supply unit, should the supply air temperature drop below 40 F, to protect the coils from freezing.

Supplemental heating is provided by unit heaters located throughout the building. Each unit heater is controlled thermostatically to maintain the space design requirements of 60 F or above.

The radwaste building exhaust system is started manually. One of the two radwaste building exhaust fans runs continuously during normal operations. The standby fan is designed to start either automatically on failure of the operating fan or on manual initiation.

The radwaste building supply air unit fan and the exhaust fans are interlocked to prevent the supply fan from being started before the exhaust fan.

A differential pressure-indicating controller, located across the filter train, modulates a damper downstream of the filter train to maintain a constant system resistance as the particulate filters load up. This control arrangement will assure a constant system flow and thus assures that the system will always inhibit exfiltration.

The recirculation fan-coil units are initiated manually and are controlled by their respective thermostats which cycle the supply fans.

9.4.5.3 Safety Evaluation

The operation of the radwaste ventilation system is not required for the safe shutdown of the plant or for mitigating the consequences of a design basis accident.

9.4.5.4 Tests and Inspections

Preoperational testing is described in Chapter 14.0.

Filters and adsorbers are tested in the manufacturer's shop, after initial installation and subsequent to each filter or adsorber change. Following installation of the filters and the adsorbers, interim tests and inspections are performed in accordance with the requirements of Regulatory Guide 1.140.

Charcoal adsorbers are qualified per Regulatory Guide 1.140. Charcoal batch samples are factory tested with radiomethyl iodide tracers at 25 C and 70 percent relative humidity to exhibit a decontamination efficiency of no less than 99.9 percent for elemental iodine and 98 percent for methyl iodide. Sample charcoal is tested for impregnant efficiency in an independent laboratory using radiomethyl iodide tracers. Inplace testing is performed with a suitable refrigerant, in accordance with the procedures set forth in ANSI N510, to check for bed bypass leakage.

HEPA filters are factory tested with monodispersed DOP aerosol to demonstrate a minimum particulate removal efficiency of no less than 99.97 percent for 0.3 micron particulates. Inplace leak testing is carried out with cold polydisperse DOP. Testing is in accordance with the procedures set forth in ANSI N510.

Prefilters do not undergo factory or inplace testing, since no credit is taken for the removal of particulates.

Major components are accessible during normal plant operation for inspection, maintenance, and periodic testing.

9.4.5.5 Instrumentation Applications

Fan-running lights and fan-trip alarms are provided in the control room.

All exhaust fans are operable from the control room.

Thermostats, located at the various levels, control space temperatures.

Temperature-sensor elements are provided downstream of the charcoal adsorbers to indicate excessive bed heating. Local differential pressure indication is provided across each particulate filter bank.

Alarms are provided in the control room to indicate high radiation in the radwaste building and high temperature in the charcoal adsorber beds.

All instrumentation provided with the filtration units is as required by Regulatory Guide 1.140.

9.4.6 CONTAINMENT HVAC

The containment HVAC system consists of the containment shutdown purge, containment minipurge, containment atmosphere control, control rod drive mechanism (CRDM) cooling, cavity cooling, pressurizer skirt cooling, elevator machine room exhaust, the hydrogen mixing fans, and containment cooling system.

The containment shutdown purge system operates during reactor outages (mode 6 and Defueled) to supply outside air into the containment for ventilation and cooling or heating and may also be used, when the reactor is in the cold shutdown mode (mode 5), to reduce the concentration of noble gases within the containment prior to and during personnel access. The containment shutdown purge system is the preferred system for operation in modes 5 and 6 and Defueled to maintain a more suitable containment environment for personnel access due to the larger volume of air movement and heating and cooling capability.

The containment minipurge system may be used during reactor power operations to reduce the concentration of noble gases within the containment prior to and during personnel access or to equalize internal and external pressures. The containment minipurge system may also be used in modes 5 and 6 and Defueled, but must not be run in parallel with the containment shutdown purge system in order to prevent damage to fans and ductwork.

During RCS draindown activities, hydrogen from the pressurizer can be directed to the containment shutdown purge system or the containment minipurge system via temporary hoses.

The containment atmospheric control system functions, as required, to reduce the concentrations of radioiodine and particulate activity within the containment prior to and during personnel access or purging of the containment.

The CRDM cooling system maintains a suitable atmosphere during normal operation within the CRDM shroud to protect and prolong the life of the CRDM coils.

The cavity cooling system maintains a suitable atmosphere within the reactor cavity during normal operation to protect the concrete, the ex-core neutron detectors, and the neutron streaming shield.

The pressurizer cooling fan provides the necessary cooling of the lower portion of the pressurizer (skirt and heater connections) when the containment cooler serving that compartment is out of service.

The machine room exhaust fan provides the required ventilation of the containment elevator machine room during normal plant operations.

The functional bases for the containment cooling system and the hydrogen mixing system are described in Sections 6.2.2 and 6.2.5, respectively.

9.4.6.1 Design Bases

9.4.6.1.1 Safety Design Bases

The containment HVAC systems are not safety related, with the exception of associated containment penetrations, the hydrogen mixing fans, and the containment cooling system. A complete description of the design of the containment cooling system and containment hydrogen mixing system is provided in Section 6.2.2.2.

SAFETY DESIGN BASIS ONE - The containment isolation valves in the system are selected, tested, and located in accordance with the requirements of 10 CFR 50, Appendix A, General Design Criteria 54 and 56, and 10 CFR 50, Appendix J, Type C testing.

SAFETY DESIGN BASIS TWO - The containment purge system containment isolation valves are capable of rapid closure, following their respective DBA (FHA for the shutdown purge valves and LOCA for the minipurge valves), to limit the escape of fission products from the containment.

9.4.6.1.2 Power Generation Design Bases

POWER GENERATION DESIGN BASIS ONE - The containment shutdown purge system is designed to maintain a containment ambient air temperature between 50 and 90 F, when the reactor is shut down. The shutdown purge system supplies fresh air into the containment at a rate of approximately one containment volume air change per every 2 hours for fresh air ventilation.

POWER GENERATION DESIGN BASIS TWO - The Containment minipurge system has a design basis flow of 4,000 CFM which is based on continuous system operation with an assumed weekly occupancy of 5 hours for any one individual.

The assumptions used in determining the flow rate and resultant airborne activities are consistent with NUREG-0017, Reference 7, Section 12.2. Table 12.2-11 provides the assumed RCS specific activities, failed fuel percentages, RCS leakage rates, and partition factors. Table 12.2-12 provides the airborne concentrations within the containment, assuming a continuous 4,000 cfm purge.

Any individual is allowed to be exposed to the concentrations of Table I Column I of 10 CFR 20, Appendix B, for 40 hours per week or to greater concentrations for a corresponding lesser amount of time. The design bases for the minipurge results in the most limiting factor being approximately 7 times those listed in Table I, Column I and therefore occupancy for an individual would be allowed for nearly 6 hours. In addition, the philosophy of Regulatory Guide 8.15 is to minimize the requirement for wearing respirators through improved ventilation. Therefore, not using the minipurge would be contrary to the philosophy of both 10 CFR 20 and Regulatory Guide 8.15. In order to pass the required flow of 4,000 cfm and use only one set of valves in accordance with the recommendations of BTP CSB-4, an 18-inch isolation valve was utilized in lieu of the recommended 8-inch valve.

Good engineering practice limits the flow velocities and pressure drops through system valves. With an 18-inch line (velocity = 2,264 fpm), the design flow can be maintained by the supply and exhaust fans designed for a differential pressure of 4.25 and 5.0 inches w.g., respectively. If the system lines remained as designed and the isolation valves were replaced with 8-inch valves with reducers on either side, the supply and exhaust system pressure drops would increase to 9.02 and 10.5 inches w.g. at the design flow. Since the fans cannot create these high differential pressures, the design flow would not be realized and the system would not perform its design function.

The charcoal adsorbers in the discharge of the system comply with Regulatory Guide 1.140, to the extent discussed in Table 9.4-3.

POWER GENERATION DESIGN BASIS THREE - The CRDM cooling system limits the normal ambient temperature within the CRDM shroud to approximately 160 F by inducing 120 F containment air for cooling. The cooling of this air is provided by the containment coolers.

POWER GENERATION DESIGN BASIS FOUR - The cavity-cooling system is designed to limit the normal ambient temperature to acceptable limits around the out-of-core neutron detectors. The cavity concrete temperature is limited to 150 F, except for the area directly below the seal ring support, by air cooling of the reactor vessel supports and reactor coolant pipe whip restraints. The cooling of the cavity air is provided by the containment coolers.

POWER GENERATION DESIGN BASIS FIVE - The pressurizer cooling fan limits the temperature in the area below the pressurizer skirt to approximately 120 F by inducing air from the containment for cooling.

POWER GENERATION DESIGN BASIS SIX - The elevator machine room exhaust fan is designed to provide sufficient air changes in the machine room to maintain a suitable environment for the equipment located there.

POWER GENERATION DESIGN BASIS SEVEN - The containment atmospheric control system has two functions--to reduce the containment airborne concentrations of radioiodine and particulates to acceptable levels during occupancy of the containment and to reduce the amount of airborne radioiodine and particulates released to the environment to meet the as-low-as-reasonably achievable dose objective of 10 CFR 50, Appendix I during containment purges. The system operates, as needed, prior to and during purging to provide internal clean-up of the containment atmosphere by recirculation through charcoal adsorbers and HEPA filters. The charcoal adsorbers are responsive to Regulatory Guide 1.140, to the extent discussed in Table 9.4-3.

9.4.6.2 System Description

9.4.6.2.1 General Description

Piping and Instrumentation Diagrams for the containment shutdown purge system, the containment minipurge system, the containment atmospheric control system, and the CRDM and cavity-cooling system described below are shown in Figure 9.4-6.

The containment shutdown purge supply system supplies fresh outside air, tempered or cooled, as required, to the containment. During operation of the containment shutdown purge supply system, the containment shutdown purge exhaust fan takes suction from the containment through the containment purge exhaust system and containment purge filtration unit and discharges it through the unit vent.

Prior to entrance into the containment during reactor power operations, the containment minipurge system and the containment atmospheric control system may be used to reduce the concentration of noble gases, particulates, and halogens in the containment atmosphere. The containment minipurge supply system supplies air to the containment. The containment minipurge exhaust fan exhausts from the containment through the containment purge exhaust system. The exhaust air is processed through the containment purge filter-adsorber unit and discharged through the unit vent. When required, the containment atmospheric control system collects and processes airborne and particulate fission products through charcoal adsorbers. The system operates completely within the containment. The containment minipurge system and the containment atmospheric control system maintains containment occupant exposure from airborne activity to less than that specified in 10 CFR 20. Based on the source terms provided in Section 11.1 and the dose evaluation provided in Section 11.3, the exhaust system meets the objective of 10 CFR 50, Appendix I.

The containment atmospheric control systems are located on the laydown area above the operating floor, on the same side of the containment. The systems take suction from this region and discharge it upwards to supplement the normal containment air pattern.

The CRDM cooling system induces containment air into the CRDM shroud and exhausts it through the fans. Normally, two of the three fans are in operation to provide the required flow of cooling air.

The cavity-cooling system induces air supplied to the incore instrument tunnel by the containment coolers into the cavity for cooling. The rate of airflow for the cavity cooling fan is based on dissipating the heat from the vessel, nozzle support system, insulation losses, vessel piping, and gamma heating. The cavity-cooling system fans exhaust from the cavity to the containment atmosphere. Normally, one fan is in operation to provide the necessary airflow.

As described in Section 6.2.2.2 and shown in Figure 6.2.2-7, the containment coolers supply air to the lower portions of the steam generator compartments. The air is exhausted from these compartments by means of the hydrogen mixing fans, which have a high discharge velocity, directing the air-stream upward. This action in conjunction with the operation of the CRDM cooling system and the cavity cooling systems, which take suction from the lower area of the containment and discharge it upwards, produces a normal containment air flow circulation path from the bottom to the top of the containment.

9.4.6.2.2 Component Description

Codes and standards applicable to the containment HVAC systems are listed in Tables 3.2-1 and 9.4-12. The containment penetrations and containment isolation valves are designed and constructed in accordance with the requirements of quality group B and are seismic Category I. The cavity cooling system, CRDM cooling system, containment atmospheric control system, pressurizer skirt cooling, elevator machine room exhaust, and the containment purge systems (excluding the containment isolation provisions) are designed and constructed in accordance with codes and standards comparable with quality group D.

NONESSENTIAL AIR HANDLERS - The only nonessential air handlers in the containment HVAC systems are the containment shutdown purge supply air unit and the containment minipurge supply air unit.

The containment shutdown purge supply air unit consists of particulate filters, heating coil, cooling coil, centrifugal fan, and electric motor driver.

The containment minipurge supply air unit consists of particulate filters, heating coil, and centrifugal fan with electric motor driver.

NONESSENTIAL FANS - Those nonessential fans in the containment HVAC systems are the shutdown purge exhaust fan, minipurge exhaust fan, CRDM cooling fans, cavity cooling fans, pressurizer cooling fan, elevator machine room exhaust fan, and the containment atmospheric control system fans.

The shutdown purge exhaust fan, minipurge exhaust fan, and the elevator machine room exhaust fan are centrifugal fans with electric motor drivers.

The CRDM cooling fans, cavity cooling fans, pressurizer cooling fan, and containment atmospheric control system fans are vaneaxial fans with directly coupled electric motor drivers.

NONESSENTIAL FILTER UNITS - There are two nonessential filter units in the containment HVAC systems--the containment purge exhaust filter/adsorber unit and the containment atmospheric control system filter adsorber units. Each unit consists of moderate efficiency prefilters, HEPA filters, and charcoal adsorption beds.

CONTAINMENT ISOLATION VALVES - The containment purge system is the only containment HVAC system which penetrates the containment. The supply and exhaust system both contain four isolation valves. These valves are air-operated butterfly valves.

CONTAINMENT ISOLATION PENETRATION TEST VALVES – Each containment purge system penetration is provided with a manually operated gate valve for test connection which is normally locked closed and capped.

DEBRIS SCREENS - As shown on Figure 9.4-6, Sheet 4, debris screens are provided on the containment side of the minipurge supply and exhaust isolation valves to prevent the entry of lightweight debris which could preclude tight valve closure. The piping which contains the screens is ANSI B31.1 (150 pound design pressure) piping which is seismically analyzed in accordance with Position C.3 of Regulatory Guide 1.29. The screens are located approximately two pipe diameters away from the isolation valves and are inherently designed to withstand post-LOCA differential pressures due to their rugged design and the negligible pressure drop through the screen material (No. 2 mesh, .063 inch wire with a 76.4 percent free area). The screen material is welded over the 17-inch-diameter opening in a 1/4-inch-thick flange which is bolted into place.

The purge isolation valves and debris screens are located adjacent to the containment wall, outside of the secondary shield walls, and are protected from missiles which could be postulated following a LOCA. Also, motor-operated dampers are located one pipe diameter away from the screens on the containment side. These dampers and the connecting piping provide additional protection for the wire mesh screens.

CONTAINMENT COOLERS - See Section 6.2.2.2.

HYDROGEN MIXING FANS - See Sections 6.2.2.2 and 6.2.5.

ISOLATION DAMPERS - Where a means of system isolation is required, parallel-blade-type dampers are utilized. The type of operator employed is dependent upon the specific design and/or usage requirements.

FLOW CONTROL DAMPERS - Opposed-blade-type dampers are utilized, as necessary, to provide a means of system balancing. In general, these are manually operated. However, some utilize power operators to allow compensation for changes in system resistance occurring during system operation.

BACKDRAFT DAMPERS - Backdraft dampers are employed, where required, to prevent system backflow.

TORNADO DAMPERS - Tornado dampers are employed where isolation from the effects of extreme wind or tornado conditions is required. These dampers close with the flow produced by the differential pressure associated with the tornado or high winds.

FIRE DAMPERS - Fire dampers are located in fire barriers, as necessary, to maintain the fire ratings of the barriers. Dampers are the 3-hour-rated curtain type.

9.4.6.2.3 System Operation

The containment shutdown purge supply system supplies fresh outside air, tempered or conditioned as required, into the containment. During operation of the containment shutdown purge supply system, the containment shutdown purge exhaust fan operates to take suction from the containment through the containment purge exhaust system. The containment exhaust is monitored and processed through the containment purge filter/adsorber unit prior to being released through the unit vent.

The containment minipurge system and the containment shutdown purge system intakes are in a penthouse atop the auxiliary building, which is located approximately 15 feet below and 135 feet horizontally from the diesel exhaust discharge point. This separation is sufficient to provide significant dilution of the diesel exhaust gases; therefore, operation of the diesel during normal plant operations results in no significant ingestion of exhaust gases into the containment.

The containment shutdown purge supply system ductwork runs along the inside periphery of the containment and discharges to the operating floor. The containment coolers aid in the distribution of the air throughout the remainder of the containment.

The containment shutdown purge supply system and the containment shutdown purge exhaust fan may be operated continuously during shutdown to provide the containment ventilation. This system also serves as the means of heating the containment during plant shutdown.

Prior to entrance into the containment during reactor power operations or in modes 3, 4, 5, 6 or Defueled, the containment minipurge system operates in conjunction with the containment atmospheric control system. Operation of the containment minipurge system may be continuous or intermittent. The minipurge system is designed to reduce the containment noble gas concentration. The containment atmospheric control system collects and processes airborne and particulate fission products through charcoal adsorbers and operates only as required.

The CRDM cooling system induces containment air into the CRDM shroud for cooling. Normally, two of the three fans are in operation to provide the required flow of cooling air. The ultimate cooling is provided by the containment coolers. The temperature of the cooling air in the missile shield plenum is monitored via the plant computer. Each CRDM fan is provided with a manual backdraft damper to prevent bypass flow through the idle fan.

The cavity cooling system induces air into the cavity for cooling. This air is induced from the instrument tunnel (where it is supplied by the containment coolers), through the hot leg and cold leg restraints and around the neutron shield. The rate of airflow is based on dissipating the heat from the nozzle support system, insulation losses from the reactor vessel, reactor coolant piping, and the hot and cold leg restraints, and gamma heating. The cavity cooling system fans exhaust from the cavity to the containment atmosphere. Air is exhausted from the upper regions of the cavity through the reactor vessel supports and through the neutron detector wells. One operating fan has the capability to provide the necessary airflow. The ultimate cooling is provided by the containment coolers. The effluent air temperature from one reactor vessel support, from one detector well, and in one upper cavity region exhaust leg is monitored by the plant computer. In addition, temperature elements are embedded in the cavity, below each reactor vessel support, to monitor concrete temperature.

The pressurizer cooling fan is located near the bottom of the pressurizer compartment. The fan takes suction from the lower region of the pressurizer compartment (and therefore the coolest) and through the ductwork and discharges it in the area immediately below the pressurizer skirt. The fan will operate only when the associated containment cooler is out of service.

The machine room exhaust fan is located on the roof of the machinery equipment room and takes suction from the room. Makeup air is induced from the containment through transfer grilles located in the walls of the room. The machine room exhaust fan operates during normal plant operations and during shutdown. It should not be operated during ILRT, to prevent overloading of the fan motor.

Cooling water for the shutdown purge supply unit is supplied by the central chilled water system (Section 9.4.10). Hot water for both the containment shutdown purge supply unit and the containment minipurge supply unit is supplied by the plant heating system (Section 9.4.9).

Discussed below are the power generation operations and shutdown operations of the containment HVAC systems. Because the emergency operation consists only of closing the containment isolation valves, it is discussed under the power generation and shutdown operations.

POWER GENERATION OPERATION - The minipurge system is designed to minimize occupational exposures to as-low-as-reasonably-achievable (ALARA) levels. Instead of personnel entering the containment with airborne activities much greater than permissible DAC limits and at odds with the philosophy of Regulatory Guide 8.15, the containment will be purged to reduce airborne radioactivity concentrations and exposures in line with the philosophy of 10 CFR 20 and Regulatory Guide 8.15. The minipurge system is designed to be operated continuously to achieve these objectives. The need for continuous operation includes consideration for planned and unplanned entries into the containment and the need to periodically vent excess air from the containment to maintain the pressure near atmospheric conditions.

a. Preplanned Entries

During the first years of commercial operation, daily entry into the containment is assumed for planning purposes. This frequency is used by other PWRs. These entries are assumed to be from 1/2 to 1-1/2 hours in length, depending on the conditions found within the containment. This type of operation would allow correction of leaks, (much smaller than the Technical

Specification limits). Early correction, prior to the formation of large mounds of boric acid crystals and the release of significant amounts of radioactivity, enhances the overall ALARA program at the plant. The frequency of planned entries is expected to be significantly less than assumed above.

b. Unplanned Entries

Unplanned entries include those responding to abnormal indications from within the containment. These indications include leaks, equipment malfunctions, and instrumentation failures. Since these failures could have a significant impact on the continued safe operation of the plant, immediate response is most preferable. Without the continuous operation of the minipurge, the doses received from containment entries are much higher, unless entries are delayed for significant amounts of time. For instance, if the containment had not been purged for 2 weeks, it would take 65 hours to bring the airborne activity down to the same levels as those maintained with its operation.

c. Containment Pressure Reduction

Instrument air is continuously being vented to the containment from air-operated valves. These valves also dump the air from their accumulators upon actuation. In order to maintain the containment pressure near atmospheric conditions, the minipurge system is used to release excess air.

One operating plant has experienced over a 1 psig pressure buildup in 24 hours. If this rate were experienced at WCGS, the containment would have to be vented at least every other day to maintain the containment pressure within the Technical Specification upper limit of +1 1/2 psig.

The containment minipurge system is manually initiated from the control room. Exhaust from the containment is processed through the containment purge exhaust system charcoal adsorption train prior to being discharged through the unit vent. The containment purge exhaust system is monitored for radioactivity, both upstream and downstream of the charcoal adsorber. The containment purge exhaust system is provided with redundant particulate and gaseous radiation monitors in a seismic Category I section of ductwork directly downstream of the (exhaust) containment isolation valves. Downstream monitoring of the containment purge exhaust system is provided by the radiation monitor in the unit vent.

A temperature controller located downstream of the containment minipurge system maintains an offcoil temperature of 50 F during the winter months' operation. The containment minipurge supply unit has no cooling coil and, therefore, when the outside ambient temperature rises above 50 F untempered outside air is supplied to the containment. A temperature switch, located immediately downstream of the shutdown purge supply unit cooling coil, stops the supply fan if the supply air temperature falls below 40 F, to prevent freezing of the coils.

Normally, each of the four containment coolers are operating to provide containment cooling capabilities. Although only three coolers are required to provide the proper cooling, four coolers operate to provide the required air flow distribution. The bulk of this cooled air is supplied to the lower regions of the steam generator compartments. The remaining air is supplied to the instrument tunnel and at each level (operating floor and below) of the containment outside the secondary shield wall. The air supplied to each steam generator compartment is drawn upwards through the compartments by the hydrogen mixing fans and discharged into the upper elevations of the containment. Each containment cooler is monitored for leaving air temperature via the plant computer. Each containment cooler motor is monitored for vibration. In addition, containment air temperature is also monitored in the area of each containment cooler intake. Control room indication is provided for both the leaving air and inlet air temperatures.

The hydrogen mixing fans are located in the hatches above the reactor coolant pump motors. Air is drawn from the steam generator compartments by the fans and discharged toward the upper regions of containment. The discharge of the fan has provisions for a minimum throw (distance travel by the air stream) of 100 feet to minimize stratification in the upper regions of containment.

The CRDM cooling system operates normally with two of the three fans. The system is manually initiated from the control room.

The CRDM cooling fan operation is as follows:

1. When RCS temperature is >165°F and no fans are running, the missile shield plenum temperature is monitored to ensure that the cooling air remains lower than 165°F.

2. When RCS temperature is >200°F, then at least one fan must be operating.

3. When RCS temperature is >350°F, then

    a. two fans must be operating, or
    b. one fan must be operating, and the missile shield plenum temperature is monitored to ensure that the cooling air remains less than 165°F.

The CRDM cooling system removes residual heat from the CRDM following a trip of the rods. This is a nonessential operation, but, if available, will protect the CRDM.

The cavity cooling system fan induces containment air from the instrument tunnel, through the reactor coolant piping penetrations, and into the cavity for cooling. Portions of this air are

exhausted directly through the reactor vessel supports and the out-of-core neutron detector wells for cooling, and the remaining air is exhausted from the upper portions of the cavity.

The cavity cooling system maintains the concrete at a temperature of no greater than 150°F, except for the area directly below the seal ring support which is limited to 220°F. Temperatures outside the reactor cavity are described in Section 6.2.2.

The pressurizer cooling fan induces air from the containment to provide cooling of the pressurizer skirt and heater connections when the containment cooler serving the pressurizer compartment is out of service. The system is manually initiated from the control room.

The elevator machine room exhaust fan provides the required ventilation of the machinery equipment room. The fan is manually operated from the control room.

The containment atmospheric control system, when required, is started manually from the control room. The system operates in a recirculation mode whenever cleanup of the containment atmosphere is required.

During containment atmospheric control system operations, as filter loading increases, a constant flow is maintained by utilizing a modulating damper located downstream of the filter train. As the filter loads, a pressure differential indicator controller monitors the change in pressure drop across the charcoal bed (the charcoal bed will not load up and thus has a constant pressure drop for a given flow) and modulates the damper accordingly to maintain the system resistance.

Each containment atmospheric control system filtration unit is provided with thermistors in the airstream between the charcoal beds to alarm via the plant computer at 200 °F and 300 °F. The filtration unit is open at both ends so that any pressure buildup which may result from the excessive bed heating is vented to the containment atmosphere.

SHUTDOWN OPERATIONS - Once cold shutdown (mode 5) is achieved, the containment shutdown purge system is the desired system to be operated. The elevator machine room exhaust fan may also be operated. The minipurge system may be operated in this mode and also in mode 6 or Defueled, but not in parallel with the shutdown purge system. The containment shutdown purge system and the minipurge system are manually initiated from the control room. The containment purge exhaust system is

monitored for radioactivity, both upstream and downstream of the charcoal adsorber. The containment purge exhaust system is provided with redundant particulate and gaseous radiation monitors in a seismic Category I section of duct-work directly downstream of the (exhaust) containment isolation valves. Downstream monitoring of the containment purge exhaust system is provided by the radiation monitor located in the unit vent.

A differential pressure indicator controller, located across the charcoal adsorber, modulates a damper downstream of the filter train to maintain constant system resistance as the particulate filters load up. This control arrangement assures a constant system flow.

The containment purge charcoal adsorber train is monitored for charcoal bed temperature. Should the bed temperature exceed 200 °F, an alarm is received in the control room to alert the operators of excessive bed heating. Should the bed temperature continue to rise and exceed 300 °F, a second alarm is received in the control room. To prevent backflow through the system, upstream isolation is provided by a backdraft damper located at the inlet to the filter train.

Temperature controllers, located downstream of the containment shutdown purge supply unit, regulate the flow of chilled water or hot water to the respective coils to ensure that the containment is maintained between the design temperatures of 50 °F and 90 °F during shutdown. A temperature switch, located immediately downstream of the supply unit cooling coil, stops the supply fans if the supply air temperature falls below 40 °F to prevent freezing of the coils.

The elevator machine room exhaust fan provides the required ventilation of the machinery equipment room. The fan is manually operated from the control room.

The containment coolers and the hydrogen mixing fans may be operated during refueling operations to provide supplemental air distribution within the containment. Both the hydrogen mixing fans and the containment cooler fans are operated at low speed to reduce noise levels within the containment. The coolers may be operated with service water to provide supplemental cooling or without service water for supplemental heating.

The containment coolers may be operated during containment integrated leak rate testing (ILRT) to maintain uniform containment temperature. If in-service, the coolers are operated with service water to provide

cooling and without service water to provide heating during the test procedure. If in-service the fans are operated at low speeds during this elevated pressure condition.

EMERGENCY OPERATIONS - Both the containment shutdown purge and the containment minipurge isolation valves are automatically closed upon receipt of a containment purge isolation signal (CPIS). The CPIS is initiated by receipt of an SIS, indication of high radioactivity levels in the containment atmosphere by one of the containment atmospheric radiation monitors, or by indication of high radioactivity levels in the purge exhaust system process effluents by one of the purge exhaust radiation monitors. Sections 7.2.2 and 7.3.2 discuss these various signals which generate a CPIS.

The containment purge isolation valves are designed for rapid closure to minimize release of containment effluents following postulated accident conditions. The containment minipurge isolation valves are designed for tight closure within 3 seconds after receipt of an isolation signal. Wire screens are provided on the inboard (containment) side of these valves to preclude the entrance of debris which could prevent tight closure of the minipurge valves. The shutdown purge containment isolation valves are tested by the manufacturer under static conditions for valve closure within 10 seconds. Both these valves are designed to fail closed by spring action upon a loss of power or instrument air. Spectacle flanges are provided inboard the inboard valves and outboard of the outboard valves to facilitate integrated leak rate testing of each individual valve. Also, a test valve is provided outside containment at each penetration to facilitate integrated leak rate testing.

Sections 6.2.2 and 6.2.5 provide the description of the containment coolers and the hydrogen mixing fans following a postulated DBA.

9.4.6.3 Safety Evaluation

Safety evaluations are numbered to correspond to the safety design bases in Section 9.4.6.1.

SAFETY EVALUATION ONE - Sections 6.2.4 and 6.2.6 provide the safety evaluation for the system containment isolation arrangement and testability.

SAFETY EVALUATION TWO - A testing program, implemented by the manufacturer, verifies a minipurge containment isolation valve closure time of 3 seconds or less. The containment minipurge containment isolation valves comply with BTP CSB 6-4 to the extent discussed in Table 9.4-13. The shutdown purge containment isolation valve is tested by the manufacturer to verify a closure time of 10 seconds or less under static conditions.

9.4.6.4 Tests and Inspections

Preoperational testing is described in Chapter 14.0.

Filters and adsorbers in the containment purge exhaust system and the containment atmospheric control system are tested in the shop and after initial installation. The containment purge exhaust system filters and adsorbers are also tested subsequent to each filter or adsorber change. Interim tests and inspection are performed annually, after installation, in accordance with the requirements of Regulatory Guide 1.140 except as noted below.

Prefilters do not undergo factory or inplace testing since no credit is taken for removal of particulates in meeting permissible dose rates. However, unloaded prefilters will exhibit a 55-percent efficiency (min.) for the removal of coarse particulates, when tested in accordance with ASHRAE-52.

HEPA filters are factory tested with monodispersed DOP aerosol to demonstrate a minimum particulate removal efficiency of no less than 99.97 percent for 0.3 micron particulates. Inplace leak testing is carried out with cold polydisperse DOP. Testing is in accordance with the procedures set forth in ANSI N510. The containment atmospheric control system is exempt from this subject inplace testing.

Charcoal adsorbers are qualified per Regulatory Guide 1.140 and are factory tested in accordance with RDT-M-16-IT to exhibit a decontamination efficiency of no less than 99.5 percent for elemental iodine and 95 percent for methyl iodide. Inplace testing is performed with a suitable refrigerant in accordance with the procedures set forth in ANSI N510. The containment atmospheric control system is exempt from this subject inplace testing.

The containment shutdown purge system and the containment minipurge system, excluding the containment isolation valves, the containment atmospheric control system, CRDM cooling system, cavity cooling system, pressurizer cooling system, and elevator machine room exhaust fan undergo acceptance testing prior to plant startup.

The containment purge valves undergo preoperational testing prior to plant startup. Each valve is leak rate tested in accordance with 10 CFR 50, Appendix J.

Fans are rated in accordance with AMCA standards.

Major components located outside the containment are accessible during normal plant operation for inspection, maintenance, and periodic testing. Components located inside the containment are accessible during plant shutdown.

9.4.6.5 Instrumentation Applications

Indication of the operational status of the containment purge exhaust fans and all the fans in the containment is provided in the control room.

All fans and air handlers are operable from the control room.

An indication of the position of all isolation dampers is provided in the control room.

Temperature controllers located in the containment purge ductwork control the containment temperature during shutdown.

The amount of filter loading for all filters associated with both the air handlers and the filter adsorbers is available at the unit.

All instrumentation provided with the containment atmospheric control system and the containment purge system filter adsorber units is as required by Regulatory Guide 1.140.

Indication of the levels of gaseous, particulate, and iodine radioactivity being exhausted from the containment and being released through the unit vent is available in the control room.

The temperature of the air leaving one of the detector wells, leaving one reactor vessel support, and leaving the upper cavity area, as well as the concrete temperature below each reactor vessel support, is available in the control room.

The containment pressure relative to the auxiliary building, the containment temperature, and the containment relative humidity are available in the control room.

Each containment cooler is monitored for leaving air temperature via the plant computer. Each containment cooler motor is monitored for vibration. In addition, containment air temperature is also monitored in the area of each containment cooler intake. Control room indication is provided for the inlet air temperatures.

Each containment cooler fan is operable from the control room.

Each hydrogen mixing fan is operable from the control room and is monitored for fan vibration.

9.4.7 DIESEL GENERATOR BUILDING VENTILATION

The function of the diesel generator building (DGB) ventilation system is to provide a combustion air makeup rate and an environment suitable for the operation of the diesel generators.

9.4.7.1 Design Bases

9.4.7.1.1 Safety Design Bases

The DGB HVAC system, excluding unit heaters, is safety related and is required to function following a DBA and to achieve and maintain the plant in a post accident safe shutdown condition.

SAFETY DESIGN BASIS ONE - The DGB ventilation system is protected from the effects of natural phenomena, such as earthquakes, tornadoes, hurricanes, floods, and external missiles.

SAFETY DESIGN BASIS TWO - The DGB ventilation system is designed to remain functional after a SSE and to perform its intended function following a postulated hazard, such internal missiles, or pipe break (GDC-4).

SAFETY DESIGN BASIS THREE - The safety functions of the DGB ventilation system can be performed, assuming a single active component failure coincident with the loss of offsite power (GDC-44).

SAFETY DESIGN BASIS FOUR - The DGB ventilation system is designed so that the active components are capable of being tested during plant operation.

SAFETY DESIGN BASIS FIVE - The DGB ventilation system uses the design and fabrication codes consistent with the quality group classification assigned by Regulatory Guide 1.26 and the seismic category assigned by Regulatory Guide 1.29. The power supply and control functions must be in accordance with Regulatory Guide 1.32.

SAFETY DESIGN BASIS SIX - The DGB ventilation system maintains a suitable atmosphere in the DGB while the diesel is operating. Cooling is accomplished by the outside air.

9.4.7.1.2 Power Generation Design Bases

POWER GENERATION DESIGN BASIS ONE - The DGB heating system limits the minimum room temperature to 60 F during periods when the diesel is not operating (See Note 8 of Table 3.11(B)-1 for clarification).

9.4.7.2 System Description

9.4.7.2.1 General Description

Figure 9.4-7 is the piping and instrumentation diagram for the DGB ventilation and heating system.

The DGB ventilation system provides cooling for the diesel generators, using outside air as the cooling medium. Air is supplied into the building, pressurizing the building slightly, and is vented from the building through exhaust air louver openings. Each diesel generator room is provided with a separate system. Electric unit heaters are provided in each room for heating.

The ventilation system serves as a source of makeup air which is used for combustion air by the diesel.

9.4.7.2.2 Component Description

Codes and standards applicable to the DGB ventilation system are listed in Tables 3.2-1 and 9.4-14. The DGB ventilation system is designed and constructed in accordance with codes and standards comparable with quality group C.

SAFETY-RELATED FANS - A DGB supply fan is located in each diesel generator room. These fans are vaneaxial fans with electric motor drivers.

UNIT HEATERS - Heating of the diesel generator building is provided by electric unit heaters. Each unit heater consists of a coil and a fan with an electric motor driver.

ISOLATION DAMPERS - Where a means of system isolation is required, parallel-blade-type dampers are utilized. The type of operator employed is dependent upon the specific design and/or usage requirements.

FLOW CONTROL DAMPERS - Opposed-blade-type dampers are utilized, as necessary, to provide a means of system balancing. In general, these are manually operated. However, some utilize power operators to allow compensation for changes occurring during system operation.

TORNADO DAMPERS - Tornado dampers are employed where isolation from the effects of extreme wind or tornado conditions is required. These dampers close with the flow produced by the differential pressure associated with the tornado or high winds.

9.4.7.2.3 System Operation

The DGB ventilation system is automatically activated when the room temperature exceeds 90°F and automatically shuts down when room temperature falls below 85°F. The ventilation system can be manually activated, if necessary, to provide cooling during occupation of the building. When the ventilation system is in operation, the supply fans take suction from the outside air and supply air directly to their respective diesel generator room for maximum cooling requirements. However, each system is provided with a recirculation mode, whereby a portion of the room air may be mixed with the outside air. This recirculation mode is primarily for winter operation to prevent freezing. The recirculated room air is utilized for tempering the outside air. Outside air intake and exhaust louvers are selected on the basis of adverse environmental conditions. Louver blades are fixed and, hence, cannot become inoperable due to freezing or icing. They are designed to reduce cascading and reentrainment of water into the airstream. Design of the louvers is for air inlet velocities below 500 fpm to prevent moisture carryover. Electrical unit heaters are provided in each room to limit the minimum room temperature to 60 F when the diesels are not operating. These unit heaters operate automatically and independently from the ventilation system.

The fire protection system provided for the diesel generators is a preaction sprinkler system. Carbon dioxide is not utilized as the extinguishing medium. Hence, there is no possibility of CO2 being drawn into the combustion air. The exhaust stack is located approximately 65 feet horizontally from the air intake and discharges approximately 35 feet above the air intake. The distances between the diesel intake and exhaust, the exit velocity of the gases from the exhaust stack, and the buoyancy of the hot exhaust gases are sufficient to reduce the possibility of exhaust gases being drawn into the combustion air stream to insignificant levels.

The probability of inducing exhaust gases into the intake air stream, due to the loss of the stacks, is slight since the distance between the intake and exhaust (65 feet) is sufficient to prevent a short-circuiting of the exhaust gases.

Discussed below are the emergency operations of the DGB ventilation system. Except for operation of the unit heaters, the power generation operations and shutdown operations are identical to the emergency operations.

EMERGENCY OPERATIONS - The DGB ventilation system is automatically activated when the room temperature exceeds 90°F and automatically shuts down when room temperature falls below 85°F. The ventilation system can be manually activated, if necessary, to provide cooling during occupation of the building.

For maximum cooling, the supply fans take suction from the outside and supply directly to their respective rooms. All cooling is accomplished by the outside air. Each fan is provided with a mixing box arrangement. When maximum cooling is not required, a portion of the room air is mixed with the outside air. The proportion of outside air and room air is controlled by a room thermostat to maintain the ambient temperature within its specified range, when outside temperatures permit. This mixing mode is primarily for winter operation to prevent freezing and to minimize cycling of the fans. The room air is utilized for tempering the outside air.

The supply air system, when in operation, serves as a source for combustion air to be used by the diesel generators. The exhaust air flowpath also supplies combustion air for the diesels regardless of the mode of operation of the supply air system. The exhaust flowpath of the ventilation system is provided with a damper which is designed to fail in the open position. This exhaust damper opens automatically on a diesel start to ensure that the maximum quantity (24,000 cfm) of combustion air required by the diesel is provided. The exhaust damper is normally closed when the supply air system is not operating to prevent cold outside air from entering the building. With the diesel operating at full load, the ventilation system providing the required outside air for combustion (17,900 cfm at -30F), and excluding the unit heaters as a source of heat, the room temperature will remain above freezing.

The diesel room is pressurized slightly by the air supply system and relieved through the exhaust louver. The exhaust damper, located upstream of the exhaust louver and tornado damper, provides building isolation against outside air infiltration during system shutdown.

The diesel generators building supply air system intake and the exhaust system ductwork contain dampers capable of withstanding the effects of extreme wind or tornado conditions (3 psi at a rate of 2 psi/sec per Regulatory Guide 1.76). These dampers close with the flow produced by the differential pressure associated with high winds or tornadoes. The damper located in the exhaust system ductwork is spring loaded to prevent closure during normal system operation.

Missile barriers are provided externally to the isolation system to prevent damage by a tornado missile.

Both the supply air intake and the recirculation ductwork are provided with modulating dampers operated by electrohydraulic actuators. These dampers modulate, as required, to provide the required mixing of the supply and recirculation air to maintain the room temperature within the specified limits. Modulation of the dampers is controlled by a Class IE control circuit which senses the room temperature and operates the dampers accordingly. This control circuit serves to start the fan should the room temperature rise above 90°F, as well as initiate opening of the exhaust damper. This control circuit also serves to alarm the control room, via the plant computer, of low room temperature and high room temperature.

The ventilation system with its recirculation mode of operation, and cut-off below approximately 85°F whenever the diesels are operating, can maintain room ambient temperatures between 60° and 122° F when the outside ambient temperatures are between 7°and 97°F. When the diesels are in standby, heating is provided by strategically located unit heaters.

Electrical unit heaters, each individually controlled by its associated room thermostat, are provided in each room to limit the minimum room temperature to 60 F during periods when the diesel is not operating. These unit heaters operate automatically and independently from the ventilation system.

9.4.7.3 Safety Evaluation

Safety evaluations are numbered to correspond to the safety design bases in Section 9.4.7.1.

SAFETY EVALUATION ONE - The safety-related portions of the DGB ventilation system are located in the diesel building, which is designed to withstand the effects of earthquakes, tornadoes, hurricanes, floods, external missiles, and other appropriate natural phenomena. Sections 3.3, 3.4, 3.5, 3.7(B), and 3.8 provide the bases for the adequacy of the structural design of these buildings.

SAFETY EVALUATION TWO - The safety-related portions of the DGB ventilation system are designed to remain functional after a SSE. Sections 3.7(B).2 and 3.9(B) provide the design loading conditions that were considered. Sections 3.5 and 3.6 provide the hazards analyses to assure that a safe shutdown, as outlined in Section 7.4 can be achieved and maintained.

SAFETY EVALUATION THREE - Complete redundancy is provided for the DGB ventilation system and, as indicated by Table 9.4-15, no single failure can compromise the system's safety functions. All vital power can be supplied from either onsite or offsite power systems, as described in Chapter 8.0.

SAFETY EVALUATION FOUR - The DGB ventilation system was initially tested with the program given in Chapter 14.0. Periodic inservice functional testing is done in accordance with Section 9.4.7.4.

SAFETY EVALUATION FIVE - Section 3.2 delineates the quality group classification and seismic category applicable to the safety-related portion of this system and supporting systems. All the power supplies and control functions necessary for safe function of the DGB ventilation systems are Class IE, as described in Chapters 7.0 and 8.0.

SAFETY EVALUATION SIX - The DGB ventilation system has sufficient cooling capability to maintain the diesel room at 122 F or below with the diesel operating at rated load and with ambient outside air temperature of 97 F. The supply fan is stopped should the room temperature drop below 85°F.

9.4.7.4 Tests and Inspections

Preoperational testing is described in Chapter 14.0.

One of the two redundant DGB fans is tested in accordance with standards of the Air Moving and Conditioning Association (AMCA) to assure fan characteristic performance curves.

Major components are accessible during normal plant operation for inspection, maintenance, and periodic testing.

9.4.7.5 Instrumentation Applications

Indication of the DGB fan operational status is provided in the control room.

All DGB fans are operable from the control room.

An indication of the position of all exhaust dampers is provided in the control room.

Thermostats control the room temperatures.

The DGB room temperature is available in the control room.

High and low DGB room temperature is alarmed in the control room.

Exhaust dampers are operable from the control room.

9.4.8 ESSENTIAL SERVICE WATER PUMPHOUSE VENTILATION

The function of the essential service water (ESW) pumphouse ventilation system is to provide an environment suitable for operation of the essential service water pump motors and associated electrical equipment.

9.4.8.1 Design Bases

9.4.8.1.1 Safety Design Bases

The ESW pumphouse ventilation system excluding unit heaters, is safety-related, is required to function following a DBA, and is required to achieve and maintain the plant in a post accident safe shutdown condition.

SAFETY DESIGN BASIS ONE - The ESW pumphouse ventilation system is protected from the effects of natural phenomena, such as earthquakes, tornadoes, hurricanes, floods, and external missiles (GDC-2).

SAFETY DESIGN BASIS TWO - The ESW pumphouse ventilation system remains functional after an SSE and performs its intended function following a postulated hazard, such as internal missiles, or pipe break (GDC-4).

SAFETY DESIGN BASIS THREE - Safety functions can be performed, assuming a single active component failure coincident with the loss of offsite power (GDC-44).

SAFETY DESIGN BASIS FOUR - Active components of the ESW pumphouse ventilation system are capable of being tested during plant operation.

SAFETY DESIGN BASIS FIVE - The ESW pumphouse ventilation system uses the design and fabrication codes consistent with the quality group classification assigned by Regulatory Guide 1.26 and the seismic category assigned by Regulatory Guide 1.29. The power supply and control functions must be in accordance with Regulatory Guide 1.32.

SAFETY DESIGN BASIS SIX - The ESW pumphouse ventilation system is designed to limit the building to a maximum ambient temperature of 122 F (50 C). Cooling is accomplished by the outside air.

9.4.8.1.2 Power Generation Design Bases

POWER GENERATION DESIGN BASIS ONE - The essential service water pumphouse heating system will limit the minimum room temperature to 50°F during periods when the pumps are not operating (See Note 8 of Table 3.11(B)-1 for clarification). The temperature in the yard piping access vaults is required to be monitored during cold weather to assure freezing conditions do not occur. Access vaults AV2 and AV6 do not have temperature indication. Access vaults AV2 and AV6 will not reach a freezing temperature based on normal flow conditions of the return piping in the vaults and the maximum credited stagnation time.

9.4.8.2 System Description

9.4.8.2.1 General Description

The ESW pumphouse ventilation system is shown in Figure 9.4-8.

The ESW pumphouse ventilation system provides cooling for the essential service water pump motors, using outside air as the cooling medium. Air is supplied into the building, pressurizing the building slightly, and is vented from the building through exhaust air louver openings. Each ESW pumproom is provided with a separate system. Electric unit heaters are provided in each room for heating.

9.4.8.2.2 Component Description

Codes and Standards applicable to the ESW pumphouse ventilation system are listed in Tables 3.2-1 and 9.4-16. The ventilation system, excluding unit heaters, is designed and constructed in accordance with codes and standards comparable with quality group C. The unit heaters are designed and constructed in accordance with codes and standards comparable with quality group D.

SAFETY-RELATED FANS - An ESW pumphouse supply fan is located in each pumproom. These fans are vaneaxial fans with electric motor operators.

UNIT HEATERS - Heating of the ESW pumphouse is provided by electric unit heaters.

TORNADO DAMPERS - Tornado dampers are provided in the ventilation intake and exhaust paths. These dampers close with the flow produced by the differential pressure associated with high winds or tornadoes.

ISOLATION DAMPERS - The ventilation exhaust paths employ air-operated, parallel-blade-type dampers for isolation.

FLOW CONTROL DAMPERS - The ventilation supply system employs opposed-blade-type dampers as the means for controlling the mixture of recirculation and outside air being supplied to the pumproom. These dampers are operated by means of electro/hydraulic actuators.

9.4.8.2.3 System Operation

Each ESW pumphouse ventilation subsystem is automatically actuated by a start of the associated essential service water pump. The supply fans take suction from the outside and supply air directly to the respective pumprooms.

However, when maximum cooling is not required, the system is provided with a recirculation mode whereby a portion of the room air is mixed with the outside air. This recirculation mode is primarily for winter operation to prevent freezing and continuous cycling of the fans. The recirculated room air is utilized for tempering the outside air.

Each room is provided with dampers in the supply and exhaust ductwork to isolate the outside openings during a tornado.

Electric unit heaters are provided in each room to limit the minimum room temperature to 50 F. These unit heaters operate automatically and independently of the ventilation system.

Discussed below are the emergency operations only, since there are no power generation operations associated with the ESW pumphouse ventilation system.

EMERGENCY OPERATIONS - The ESW pumphouse ventilation system is automatically activated upon starting the associated ESW pump and automatically shut down when the pump shuts down. During periods when the pumps or fans are shut down, the ventilation system can be manually activated to provide cooling, if necessary, during occupation of the building. The system may be started manually, either by the local handswitch located in the room, or by the remote handswitch located in the control room.

For maximum cooling, the supply fans take suction from the outside and supply directly to their respective rooms. All cooling is accomplished by outside air. Each fan is provided with a mixing box arrangement. When maximum cooling is not required, a portion of the room air is mixed with the outside air. The proportion of outside air to room air is controlled by a room thermostat to maintain ambient temperature within a specified range. This

mixing mode is primarily for winter operation to prevent freezing and to minimize cycling of the fans. The room air is used for tempering the outside air.

The exhaust flow path is provided with a damper which is designed to fail in the open position. The exhaust damper is normally closed, when the pumps are not operating, to prevent cold outside air from entering the building. This exhaust damper opens automatically upon initiation of pump or fan operation to assure an exhaust air flow path, regardless of the mode of operation of the supply air system.

The ESW pumphouse is pressurized slightly by the air supply system and relieved through the exhaust system. The exhaust damper, located upstream of the exhaust louver and tornado damper, provides building isolation against outside air infiltration during system shutdown.

The supply air system intake and the exhaust system ductwork contain dampers capable of withstanding the effects of extreme wind or tornado conditions (a differential pressure of 3 psi and a differential pressure rate of 2 psi per second per Regulatory Guide 1.76). These dampers close with the flow produced by the differential pressure associated with the high winds or tornado. The damper located in the exhaust system ductwork is spring loaded to prevent closure during normal system operation.

Missile barriers are provided externally to the isolation system to prevent damage by a tornado missile.

Both the supply air intake and the recirculation ductwork are provided with modulating dampers operated by electro-hydraulic actuators. The dampers modulate, as required, to provide the required mixing of the supply and recirculation air to maintain the room temperature within the specified limits. Modulation of the dampers is controlled by a Class IE control circuit which senses the room temperature and operates the dampers accordingly. This control circuit also serves to alarm the control room, via the plant computer, on low room temperature and high room temperature and to shut down the fan should the room temperature fall below 65 F.

The ventilation system with its recirculation mode of operation, whenever the pumps are operating, can maintain room ambient temperatures between 50 and 122 F when the outside ambient temperatures are between the minimum and maximum site design temperatures (see Table 9.4-16).

When the pumps, and hence ventilation system, are in standby, heating is provided by strategically located unit heaters. Electric unit heaters, each individually controlled by its associated room thermostat, are provided in each room to limit the minimum room temperature to 50 F. These unit heaters are nonseismic Category I, and operate automatically and independently from the ventilation system.

The essential service water yard piping access vaults are required to be monitored during cold weather to assure that freezing temperatures do not occur in the vaults. A temperature indicator (EF system designation) is provided for each vault, to allow monitoring the vault temperatures. Access vaults AV2 and AV6 do not have temperature indication. Access vaults AV2 and AV6 will not reach a freezing temperature based on normal flow conditions of the return piping in the vaults and the maximum credited stagnation time.

9.4.8.3 Safety Evaluation

Safety evaluations are numbered to correspond to the safety design bases in Section 9.4.8.1.

SAFETY EVALUATION ONE - The safety-related portions of the ESW pumphouse ventilation system are located in the ESW pumphouse which is designed to withstand the effects of earthquakes, tornadoes, hurricanes, floods, external missiles, and other appropriate natural phenomena. Sections 3.3, 3.4, 3.5, 3.7(B), and 3.8 provide the bases for the adequacy of the structural design of this building.

SAFETY EVALUATION TWO - The safety-related portions of the ESW pumphouse ventilation systems are designed to remain functional after SSE. Sections 3.7(B).2 and 3.9(B) provide the design loading conditions that were considered. Sections 3.5 and 3.6 provide the hazards analyses to assure that a safe shutdown, as outlined in Section 7.4 can be achieved and maintained.

SAFETY EVALUATION THREE - The system description shows that complete redundancy of the ESW pumphouse ventilation system is provided and, as indicated by Table 9.4-17 no single failure will compromise the system's safety functions. All vital power can be supplied from either onsite or offsite power systems, as described in Chapter 8.0.

SAFETY EVALUATION FOUR - The ESW pumphouse ventilation system is initially tested with the program given in Chapter 14.0. Periodic inservice functional testing is done in accordance with Section 9.4.8.4.

SAFETY EVALUATION FIVE - Section 3.2 delineates the quality group classification and seismic category applicable to the safety-related portion of this system and supporting systems. All the power supplies and control functions necessary for safe function of the ESW pumphouse ventilation system are Class IE, as described in Chapters 7.0 and 8.0.

SAFETY EVALUATION SIX - The ESW pumphouse ventilation system has sufficient cooling capacity to maintain the rooms at 122 F or below when the ESW pump motors are operating at rated load and the outside air is at the maximum site design ambient.

9.4.8.4 Tests and Inspections

Preoperational testing is described in Chapter 14.0.

One of each group of ESW pumphouse ventilation fans is tested in accordance with standards of the Air Moving and Conditioning Association (AMCA) to ensure fan characteristic performance curves.

Major components are accessible during normal plant operation for inspection, maintenance, and periodic testing.

9.4.8.5 Instrumentation Applications

Indication of ESW pumphouse status is provided in the control room.

The ESW pumphouse fans are operable from the control room.

Thermostats control the room temperatures.

Each room's temperature is available in the control room.

High and low room temperature is alarmed in the control room.

9.4.9 PLANT HEATING SYSTEM

The plant heating system (PHS) serves as the heating medium for air to provide a suitable environment for personnel and equipment.

9.4.9.1 Design Bases

9.4.9.1.1 Safety Design Basis

This system serves no safety function. Failure of the system does not affect safe shutdown of the plant.

9.4.9.1.2 Power Generation Design Basis

POWER GENERATION DESIGN BASIS ONE - The PHS provides hot water for the heating coils and the unit heaters.

9.4.9.2 System Description

9.4.9.2.1 General Description

The PHS is shown in Figure 9.4-9.

The PHS is composed of redundant hot-water pumps, a steam-to-water heat exchanger, and a supply and return piping system. Each of the hot-water pumps is rated at 100 percent of the total system flow to ensure system operation in the event of the failure of one of the pumps. An expansion tank is provided on the suction side of the hot-water pumps to accommodate the volume of water expansion and maintain suction pressure for the pumps.

The steam-to-water heat exchanger is located on the discharge side of the hot-water pumps and heats the water flowing through it. During normal plant operation, the heat exchanger utilizes steam from the reboiler as the heating medium, and during plant shutdown it utilizes steam produced by the auxiliary boiler.

In-line, secondary loop, hot-water pumps are provided with the heating coils for all outside supply air units.

9.4.9.2.2 Component Description

Codes and standards applicable to the PHS is listed in Table 9.4-18. The plant heating system is designed and constructed in accordance with codes and standards comparable with quality group D.

The PHS consists of a steam-to-water heat exchanger, two 100-percent-capacity pumps, electric motor drivers, expansion tank, and associated piping, valves, instruments, and controls.

HEAT EXCHANGER - The plant heating heat exchanger is the steam-to-water type and consists of a shell and tubes. The steam is supplied to the shell, and the water to be heated flows through the tubes.

PUMPS - The main hot-water pumps are the centrifugal horizontal split case type with electric motor drivers.

Design data for the plant heating system components are given in Table 9.4-18.

9.4.9.2.3 System Operation

The heating system, which utilizes hot water as the heating medium, provides the source of heat for the ventilation system heating coils and unit heaters. The hot water is pumped by one of

the two hot-water pumps through the supply main to the heat exchanger, where its temperature is raised to 198 F. The 198 F water then flows to the various heating coils where the air is heated. It then leaves the coils at approximately 158 F and flows through the return main to the hot-water pumps.

Operation of the hot-water pumps is initiated either manually by operator action or automatically upon indication of low outside air temperature. Temperature sensors are located outside the auxiliary and control buildings near the air intakes. Either sensor will automatically initiate the hot-water pumps and energize the inlet steam temperature control valve. The pumps will start with an outside air temperature of approximately 60 F, or less.

Overpressure protection is provided for both the shell and tube sides of the plant heating heat exchanger.

9.4.9.3 Safety Evaluation

The operation of the PHS is not required for the safe shutdown of the plant or for mitigating the consequences of a design basis accident.

9.4.9.4 Tests and Inspections

Preoperational testing is described in Chapter 14.0.

The hot-water system is hydrostatically tested in accordance with ANSI B31.1.

Major components are accessible during normal plant operation for inspection, maintenance, and periodic testing.

9.4.9.5 Instrumentation Applications

An alarm is provided in the control room to indicate high and low water levels in the expansion tank.

Local pressure indication is provided upstream and down stream of each hot-water pump.

9.4.10 CENTRAL CHILLED WATER SYSTEM

The central chilled water system (CeCWS) serves as the cooling medium for air to provide a suitable environment for personnel and equipment and to reduce the outside air requirements.

9.4.10.1 Design Bases

9.4.10.1.1 Safety Design Basis

The CeCWS serves no safety function. Failure of the system does not affect the safe shutdown of the plant.

9.4.10.1.2 Power Generation Design Basis

POWER GENERATION DESIGN BASIS ONE - The CeCWS provides chilled water for the cooling coils.

9.4.10.2 System Description

9.4.10.2.1 General Description

The CeCWS is shown on Figure 9.4-10.

The CeCWS provides the cooling medium, when required, for the ventilation system cooling coils. The CeCWS is composed of redundant chilled-water pumps and chillers and a supply and return piping system. Each of the chilled-water pumps is rated at 100 percent of the total system load, as are the chillers, to ensure system operation in the event of the failure of one of the components. A nitrogen blanketed expansion tank is provided on the suction side of the chilled-water pumps to accommodate the volume of water expansion and maintain suction pressure for the pumps.

The chillers are located on the discharge side of the chilled-water pumps and cool the water flowing through them. The service water system serves as the heat sink for the chillers.

The CeCWS operates in a closed loop mode. To prevent rusting and deterioration of the piping, chilled water is demineralized and corrosion inhibitors are introduced on the suction side of the pumps. Strainers are placed in the line at the inlet to the pumps to protect the equipment.

9.4.10.2.2 Component Description

Codes and standards applicable to the CeCWS are listed in Table 9.4-19. The central chilled water system is designed and constructed in accordance with codes and standards comparable with quality group D.

The CeCWS consists of two 100-percent-capacity chillers, two 100-percent-capacity pumps, electric motor drivers, an expansion tank, and the associated piping, valves, instruments, and controls.

CENTRAL CHILLERS - The central chillers are the centrifugal type, and each chiller consists of a compressor, an evaporator, and a water-cooled condenser.

PUMPS - The chilled-water pumps are the centrifugal type with electric motor drivers.

Design data for components of the CeCWS are given in Table 9.4-19.

9.4.10.2.3 System Operation

The CeCWS provides the cooling medium for various ventilation cooling coils all year around, except for those cooling coils that are isolated & drained for plant winterization.

Operation of the chilled-water pumps and chillers is manually initiated from a local control panel. The chillers and the chilled-water pumps are arranged in parallel. This permits manual alignment, so that either chilled-water pump may service either chiller.

During system operation, the chilled water is pumped by one of the two chilled-water pumps through the supply main to the chiller, where its temperature is lowered to approximately 44 F. The 44 F water then flows to the various cooling zones, where it absorbs heat from the air passing over the coils. Water leaves the coils at approximately 62 F and flows through the return main to the chilled-water pumps. The heat absorbed at the coils is transferred to the chiller, which, in turn, rejects this heat to the service water.

Fully automatic condenser water flow control is provided to regulate the water flow rate to maintain the condenser head pressure. This arrangement serves as a means of head pressure control to maintain chiller operation within the more efficient range and to preclude tripping.

A means of adjusting chiller capacity in proportion to the variation in the design load is obtained through the use of temperature control. This is accomplished by means of variable inlet guide vanes at the suction to the compressor. This control reduces the capacity of the chiller by varying the angle at which the suction gas is directed into the eye of the impeller. A chilled-water temperature sensor, located in the main header downstream of the pumps, automatically maintains the leaving chilled-water temperature at 44 F.

When the temperature changes, the temperature sensor signals the chilled-water temperature controller to reposition the capacity-regulating vanes, which change the capacity of the chiller to

maintain the desired temperature. When the vanes reach the closed position and the leaving temperature of the chilled water continues to decrease to the predetermined minimum, approximately 40°F, the low chilled-water temperature cut-out switch stops the compressor.

9.4.10.3 Safety Evaluation

The operation of the CeCWS is not required for the safe shutdown of the plant or for mitigating the consequences of a design basis accident.

9.4.10.4 Tests and Inspections

Preoperational testing is described in Chapter 14.0.

Major components are accessible during normal plant operation for inspection, maintenance, and periodic testing.

9.4.10.5 Instrumentation Applications

An alarm is provided in the control room to indicate high and low water levels in the expansion tank.

Local differential pressure indication is provided across each strainer upstream of the pumps, and local pressure indication is provided downstream of each pump.

A temperature sensor located in the main header downstream of the pumps is provided to control the leaving chilled-water temperature.

A low chilled-water temperature cut-out switch stops the chiller.

9.4.11 ESSENTIAL SERVICE WATER VERTICAL LOOP CHASE VENTILATION

Louvered ventilation openings located on opposite sides and elevations of the ESW Vertical Loop Chase provide natural circulation of air through the chase to limit the internal temperature to a maximum temperature of 120°F to ensure health and safety of personnel working in the ESW Vertical Loop Chase for a limited time. This temperature has no impact to the ESW or Ultimate Heat Sink (UHS) since this is less than the maximum temperature of the lines. The increased heat load on the Control building HVAC systems due to he internal chase temperature being greater than the outside temperature requires an increased minimum air flow less than the design supply air flow for the coolers.

The ESW Vertical Loop Chase is heated. Heating of the ESW Vertical Loop Chase is provided by electric unit heaters. The heating system will limit the minimum room temperature to 32°F during cold weather periods. ESW passing through the chase will not freeze due to fiberglass insulation on the pipe and the short duration of time water will spend in the chase based on the high rate of flow through the pipe. The pipe chase has no impact on the winter heating load for the Control building.

TABLE 9.4-1

OUTSIDE ENVIRONMENT
DESIGN CONDITIONS

	Summer		Winter	
	Dry Bulb (F)	Wet Bulb (F)	Dry Bulb (F)	Wind Velocity (mph)
Normal Design Conditions (See Note 1)	97	79	7	15
Extreme Design Conditions (See Note 2)	120	--	(-)30	--

NOTES:

1. The outdoor ambient temperatures are taken from the 1972 ASHRAE Handbook of Fundamentals, Weather Data and Design Conditions, Chapter 33, Table 1. Summer 97-1/2 percent values are used. The winter wind velocity was assumed for conservatism. Portions of WCGS may be designed to the original SNUPPS normal winter temperature of -25°F.

2. All safety-related HVAC systems and components which are exposed to the outside environment are capable of sustaining the WCGS extreme temperature conditions without loss of function (see Section 3.11). However, no HVAC system (safety-related or nonsafety-related) is designed to maintain space design temperatures while operating during the WCGS extreme temperature conditions. Portions of WCGS may be designed to the original SNUPPS extreme winter temperature of -60°F.

TABLE 9.4-2

DESIGN COMPARISON TO REGULATORY POSITIONS OF REGULATORY GUIDE 1.52, REVISION 2, DATED MARCH 1978, TITLED "DESIGN, TESTING, AND MAINTENANCE CRITERIA FOR POST-ACCIDENT ENGINEERED-SAFETY-FEATURE ATMOSPHERE CLEANUP SYSTEM AIR FILTRATION AND ADSORPTION UNITS OF LIGHT-WATER-COOLED NUCLEAR POWER PLANTS."

Design requirements of this Regulatory Guide are applicable to the following exhaust systems:

a. Emergency exhaust

b. Control room filtration

c. Control room pressurization

Design requirements for nonsafety-related normal exhaust systems are
discussed in Table 9.4-3.

Regulatory Guide 1.52 Position	WCGS
1. Environmental Design Criteria	1. Environmental Design Criteria
a. The design of an engineered-safety-feature atmosphere cleanup system should be based on the maximum pressure differential, radiation dose rate, relative humidity, maximum and minimum temperature, and other conditions resulting from the postulated DBA and on the duration of such conditions.	a. Complies.

TABLE 9.4-2 (Sheet 2)

Regulatory Guide 1.52 Position	WCGS
b. The design of each ESF system should be based on the radiation dose to essential services in the vicinity of the adsorber section, integrated over the 30-day period following the postulated DBA. The radiation source term should be consistent with the assumptions found in Regulatory Guides 1.3 (Ref. 5), 1.4 (Ref. 6) and 1.25 (Ref. 7). Other engineered safety features, including pertinent components of essential services such as power, air, and control cables should be adequately shielded from the ESF atmosphere cleanup systems.	b. Complies.
c. The design of each adsorber should be based on the concentration and relative abundance of the iodine species (elemental, particulate, and organic), which should be consistent with the assumptions found in Regulatory Guides 1.3 (Ref. 5), 1.4 (Ref. 6), and 1.25 (Ref. 7).	c. Complies.
d. The operation of any ESF atmosphere cleanup system should not deleteriously affect the operation of other engineered safety features such as a containment spray system, nor should the operation of other engineered safety features such as a containment spray system deleteriously affect the operation of any ESF atmosphere cleanup system.	d. Complies.

TABLE 9.4-2 (Sheet 3)

Regulatory Guide 1.52 Position	WCGS
e. Components of systems connected to compartments that are unheated during a postulated accident should be designed for post-accident effects of both the lowest and highest predicted temperatures.	e. Complies.
2. System Design Criteria	2. System Design Criteria
a. ESF atmosphere cleanup systems designed and installed for the purpose of mitigating accident doses should be redundant. The systems should consist of the following sequential components: (1) demisters, (2) prefilters (demisters may serve this function), (3) HEPA filters before the adsorbers, (4) iodine adsorbers (impregnated activated carbon or equivalent adsorbent such as metal zeolites), (5) HEPA filters after the adsorbers, (6) ducts and valves, (7) fans, and (8) related instrumentation. Heaters or cooling coils used in conjunction with heaters should be used when the humidity is to be controlled before filtration.	a.1. Control room pressurization system complies. a.2. Emergency exhaust system complies, except that demisters are not provided. Water droplets are not entrained in the airstream. a.3. Control room filtration system complies, except that demisters are not provided. Water droplets are not entrained in the airstream. Humidity control is provided by safety-related air-conditioning system which has provisions for dehumidifying.
b. The redundant ESF atmosphere cleanup systems should be physically separated so that damage to one system does not also cause damage to the second system. The generation of missiles from high-pressure equipment rupture, rotating machinery failure, or natural phenomena should be considered in the design for separation and protection.	b. Complies.

TABLE 9.4-2 (Sheet 4)

Regulatory Guide 1.52 Position	WCGS
c. All components of an engineered-safety-feature atmosphere cleanup system should be designated as Seismic Category I (see Regulatory Guide 1.29 (Ref. 8)) if failure of a component would lead to the release of significant quantities of fission products to the working or outdoor environments.	c. Complies.
d. If the ESF atmosphere cleanup system is subject to pressure surges resulting from the postulated accident, the system should be protected from such surges. Each component should be protected with such devices as pressure relief valves so that the overall system will perform its intended function during and after the passage of the pressure surge.	d. Not applicable. The systems are located outside of the containment and not exposed to pressure surges.
e. In the mechanical design of the ESF system, the high radiation levels that may be associated with buildup of radioactive materials on the ESF system components should be given particular consideration. ESF system construction materials should effectively perform their intended function under the postulated radiation levels. The effects of radiation should be considered not only for the demisters, heaters, HEPA filters, adsorbers,	e. Complies.

TABLE 9.4-2 (Sheet 5)

Regulatory Guide 1.52 Position	WCGS
and fans, but also for any electrical insulation, controls, joining compounds, dampers, gaskets, and other organic-containing materials that are necessary for operation during a postulated DBA.	
f. The volumetric air flow rate of a single cleanup train should be limited to approximately 30,000 ft3 /min. If a total system air flow in excess of this rate is required, multiple trains should be used. For ease of maintenance, a filter layout three HEPA filters high and ten wide is preferred.	f. Complies.
g. The ESF atmosphere cleanup system should be instrumented to signal, alarm, and record pertinent pressure drops and flow rates at the control room.	g. Complies, except that flow rates are not recorded. High and low differential pressure alarms in the control room provide indication of any abnormality in flow rates.
h. The power supply and electrical distribution system for the ESF atmosphere cleanup system described in Section C.2.a above should be designed in accordance with Regulatory Guide 1.32 (Ref. 9). All instrumentation and equipment controls should be designed to IEEE Standard 279 (Ref. 10). The ESF system should be qualified and tested under Regulatory Guide 1.89 (Ref. 11). To the extent applicable, Regulatory Guides 1.30 (Ref. 12), 1.100 (Ref. 13), and 1.118 (Ref. 14) and IEEE Standard 334 (Ref. 15) should be considered in the design.	h. Complies.

TABLE 9.4-2 (Sheet 6)

Regulatory Guide 1.52 Position	WCGS
i. Unless the applicable engineered-safety-feature atmosphere cleanup system operates continuously during all times that a DBA can be postulated to occur, the system should be automatically activated upon the occurrence of a DBA by (1) a redundant engineered-safety-feature signal (i.e., temperature, pressure) or (2) a signal from redundant Seismic Category I radiation monitors.	i. Complies.
j. To maintain radiation exposures to operating personnel as low as is reasonably achievable during plant maintenance, ESF atmosphere cleanup systems should be designed to control leakage and facilitate maintenance in accordance with the guidelines of Regulatory Guide 8.8 (Ref. 16). The ESF atmosphere cleanup train should be totally enclosed. Each train should be designed and installed in a manner that permits replacement of the train as an intact unit or as a minimum number of segmented sections without removal of individual components.	j. Complies.
k. Outdoor air intake openings should be equipped with louvers, grills, screens, or similar protective devices to minimize the effects of high winds, rain, snow, ice, trash, and other contaminants on the operation of the system. If the atmosphere surrounding the plant could contain significant environmental contaminants, such as	k. Complies.

TABLE 9.4-2 (Sheet 7)

Regulatory Guide 1.52 Position	WCGS
dusts and residues from smoke cleanup systems from adjacent coal burning power plants or industry, the design of the system should consider these contaminants and prevent them from affecting the operation of any ESF atmosphere cleanup system.	
1. ESF atmosphere clean-up system housings and duct-work should be designed to exhibit on test a maximum total leakage rate as defined in Section 4.12 of ANSI N509-1976 (Ref. 1). Duct and housing leak tests should be performed in accordance with the provisions of Section 6 of ANSI N510-1975 (Ref. 2).	1. Complies.
3. Component Design Criteria and Qualification Testing	3. Component Design Criteria and Qualification Testing
a. Demisters should be designed, constructed, and tested in accordance with the requirements of Section 5.4 of ANSI N509-1976 (Ref. 1). Demisters should meet Underwriters' Laboratories (UL) Class 1 (Ref. 17) requirements.	a.1. Not applicable to emergency exhaust and control room filtration system. See response to Regulatory Position 2.a above. a.2. Control room pressurization system complies.
b. Air heaters should be designed, constructed, and tested in accordance with the requirements of Section 5.5 of ANSI N509-1976 (Ref. 1).	b.1. Not applicable to control room filtration system. See response to Regulatory Position 2.a above. b.2. Control room pressurization system and emergency exhaust system complies.

TABLE 9.4-2 (Sheet 8)

Regulatory Guide 1.52 Position	WCGS
c. Materials used in the prefilters should withstand the radiation levels and environmental conditions prevalent during the postulated DBA. Prefilters should be designed, constructed, and tested in accordance with the provisions of Section 5.3 of ANSI N509-1976 (Ref. 1).	c. Complies, except that no prefilters are used for control room pressurization system.
d. The HEPA filters should be designed, constructed, and tested in accordance with Section 5.1 of ANSI N509-1976 (Ref. 1). Each HEPA filter should be tested for penetration of dioctyl phthalate (DOP) in accordance with the provisions of MIL-F-51068 (Ref. 19) and MIL-STD-282 (Ref. 20).2	d. Complies.
e. Filter and adsorber mounting frames should be constructed and designed in accordance with the provisions of Section 5.6.3 of ANSI N509-1976 (Ref. 1).	e. Complies.
f. Filter and adsorber banks should be arranged in accordance with the recommendations of Section 4.4 of ERDA 76-21 (Ref. 3).	f. Complies.
g. System filter housings, including floors and doors, should be constructed and designed in accordance with the provisions of Section 5.6 of ANSI N509-1976 (Ref. 1).	g. Complies.

TABLE 9.4-2 (Sheet 9)

Regulatory Guide 1.52 Position		WCGS
h. Water drains should be designed in accordance with the recommendations of Section 4.5.8 of ERDA 76-21 (Ref. 3).	h.	Complies.
i. The adsorber section of the ESF atmosphere clean-up system may contain any adsorbent material demonstrated to remove gaseous iodine (elemental iodine and organic iodides) from air at the required efficiency. Since impregnated activated carbon is commonly used, only this adsorbent is discussed in this guide. Each original or replacement batch of impregnated activated carbon used in the adsorber section should meet the qualification and batch test results summarized in Table 5.1 of ANSI N509-1976 (Ref. 1). In this table, a "qualification test" should be interpreted to mean a test that establishes the suitability of a product for a general application, normally a one-time test reflecting historical typical performance of material. In this table, a "batch test" should be interpreted to mean a test made on a production batch of product to establish suitability for a specific application. A "batch of activated carbon" should be interpreted to mean a quantity of material of the same grade, type, and series that has been homogenized to exhibit, within reasonable tolerance, the same performance and physical	i.	Complies, except that the representative samples will be laboratory tested in accordance with the requirements of ASTM D3803-1989. Complies, except that replacement batches of impregnated activated carbon used in the adsorber section meets Table 5.1 of ANSI N509-1980.

TABLE 9.4-2 (Sheet 10)

Regulatory Guide 1.52 Position	WCGS
characteristics and for which the manufacturer can demonstrate by acceptable tests and quality control practices such uniformity. All material in the same batch should be activated, impregnated, and otherwise treated under the same process conditions and procedures in the same process equipment and should be produced under the same manufacturing release and instructions. Material produced in the same charge of batch equipment constitutes a batch; material produced in different charges of the same batch equipment should be included in the same batch only if it can be homogenized as above. The maximum batch size should be 350 ft3 of activated carbon. If an adsorbent other than impregnated activated carbon is proposed or if the mesh size distribution is different from the specifications in Table 5.1 of ANSI N509-1976, the proposed adsorbent should have demonstrated the capability to perform as well as or better than activated carbon in satisfying the specifications in Table 5.1 of ANSI N509-1976. If impregnated activated carbon is used as the adsorbent, the adsorber system should be designed for an average atmosphere residence time of 0.25 sec per two inches of adsorbent bed.	

TABLE 9.4-2 (Sheet 11)

Regulatory Guide 1.52 Position	WCGS
The adsorption unit should be designed for a maximum loading of 2.5 mg of total iodine (radioactive plus stable) per gram of activated carbon. No more than 5% of impregnant (50 mg of impregnant per gram of carbon) should be used. The radiation stability of the type of carbon specified should be demonstrated and certified (see Section C.1.b of this guide for the design source term).	
j. Adsorber cells should be designed, constructed, and tested in accordance with the requirements of Section 5.2 of ANSI N509-1976 (Ref. 1).	j. Complies.
k. The design of the adsorber section should consider possible iodine desorption and adsorbent autoignition that may result from radioactivity-induced heat in the adsorbent and concomitant temperature rise. Acceptable designs include a low-flow air bleed system, cooling coils, water sprays for the adsorber section, or other cooling mechanisms. Any cooling mechanism should satisfy the single-failure criterion. A low-flow air bleed system should satisfy the single-failure criterion for providing low-humidity (less than 70% relative humidity) cooling air flow.	k.1. Emergency exhaust system complies. Charcoal bed temperature is maintained below desorption range by assuring a minimum air flow across the loaded bed. k.2. Control room filtration and control room pressurization systems comply. Anticipated charcoal bed loading is not sufficient to raise bed temperature to the desorption range. However, manually actuated water sprays are provided, if required to prevent or mitigate ignition.

TABLE 9.4-2 (Sheet 12)

Regulatory Guide 1.52 Position	WCGS
l. The system fan, its mounting, and the ductwork connections should be designed, constructed, and tested in accordance with the requirements of Sections 5.7 and 5.8 of ANSI N509-1976 (Ref. 1).	l. Complies.
m. The fan or blower used on the ESF atmosphere cleanup system should be capable of operating under the environmental conditions postulated, including radiation.	m. Complies.
n. Ductwork should be designed, constructed, and tested in accordance with the provisions of Section 5.10 of ANSI N509-1976 (Ref. 1).	n. Complies.
o. Ducts and housings should be laid out with a minimum of ledges, protrusions, and crevices that could collect dust and moisture and that could impede personnel or create a hazard to them in the performance of their work. Straightening vanes should be installed where required to ensure representative air flow measurement and uniform flow distribution through cleanup components.	o. Complies.
p. Dampers should be designed, constructed, and tested in accordance with the provisions of Section 5.9 of ANSI N509-1976 (Ref. 1).	p. Complies. Dampers are designed, constructed, and tested in accordance with codes and standards comparable with the provisions of Section 5.9 of ANSI N509-1976.

TABLE 9.4-2 (Sheet 13)

Regulatory Guide 1.52 Position	WCGS
4. Maintenance	4. Maintenance
a. Accessibility of components and maintenance should be considered in the design of ESF atmosphere cleanup systems in accordance with the provisions of Section 2.3.8 of ERDA 76-21 (Ref. 3) and Section 4.7 of ANSI N509-1976 (Ref. 1).	a. Complies.
b. For ease of maintenance, the system design should provide for a minimum of three feet from mounting frame to mounting frame between banks of components. If components are to be replaced, the dimension to be provided should be the maximum length of the component plus a minimum of three feet.	b. Complies where internal removal of components is required.
c. The system design should provide for permanent test probes with external connections in accordance with the provisions of Section 4.11 of ANSI N509-1976 (Ref. 1).	c. Complies.
d. Each ESF atmosphere cleanup train should be operated at least 10 hours per month, with the heaters on (if so equipped), in order to reduce the build-up of moisture on the adsorbers and HEPA filters.	d. Each train is operated for greater than or equal to 15 continuous minutes in accordance with the technical specifications.
e. The cleanup components (i.e., HEPA filters, prefilters, and adsorbers) should not be installed while active construction is still in progress.	e. Complies.

TABLE 9.4-2 (Sheet 14)

Regulatory Guide 1.52 Position	WCGS
5. In-Place Testing Criteria	5. In-Place Testing Criteria
a. A visual inspection of the ESF atmosphere clean-up system and all associated components should be made before each in-place airflow distribution test, DOP test, or activated carbon adsorber section leak test in accordance with the provisions of Section 5 of ANSI N510-1975 (Ref. 2).	a. Complies.
b. The airflow distribution to the HEPA filters and iodine adsorbers should be tested in place for uniformity initially and after maintenance affecting the flow distribution. The distribution should be within only + 20% of the average flow per unit. The testing should filters be conducted in accordance with the provisions of Section 9 of "Industrial Ventilation" (Ref. 21) and Section 8 of ANSI N510-1975 (Ref. 2).	b. Complies, except that testing conducted in accordance with ANSI N510 utilizes the 1980 edition in lieu of the 1975 edition. However, air flow distribution testing is performed on the down-stream side of the first HEPA in lieu of each filter, as stated in Section 8.1 of ANSI N510-1980.
c. The in-place DOP test for HEPA filters should conform to Section 10 of ANSI N510-1975 (Ref. 2). HEPA filter sections should be tested in place (1) initially, (2) at least once per 18 months thereafter, and (3) following painting, fire, or chemical release in any ventilation zone communicating with the system to confirm a penetration of less than 0.05% at rated flow. An engineered-safety-	c. Complies, except that the Technical Specification acceptance criteria of less than 1.0 percent in-place penetration and bypass leakage shall be employed. The Technical Specification requirements, although less stringent than the Reg. Guide, still allow a conservative design, as the accident dose evaluation assumes a 95 percent efficiency.

TABLE 9.4-2 (Sheet 15)

Regulatory Guide 1.52 Position	WCGS
feature air filtration system satisfying this condition can be considered to warrant a 99% removal efficiency for particulates in accident dose evaluations. HEPA filters that fail to satisfy this condition would be replaced with filters qualified pursuant to regulatory position C.3.d of this guide. If the HEPA filter bank is entirely or only partially replaced, an in-place DOP test should be conducted. If any welding repairs are necessary on, within, or adjacent to the ducts, housing, or mounting frames, the filters and adsorbers should be removed from the housing during such repairs. The repairs should be completed prior to periodic testing, filter inspection, and in-place testing. The use of silicone sealants or any other temporary patching material on filters, housing, mounting frames, or ducts should not be allowed.	The in-place DOP testing is performed in accordance with Section 10 of ANSI N510-1075, but the prerequisite testing in Sections 8 and 9 is performed in accordance with the 1980 version in lieu of the 1975 version except that DOP is not injected between the two HEPA banks.
d. The activated carbon adsorber section should be leak tested with a gaseous halogenated hydrocarbon refrigerant in accordance with Section 12 of ANSI N510-1975 (Ref. 2) to ensure that bypass leakage through the adsorber section is less than 0.05%. After the test is completed, air flow through the unit should be	d. Complies, except that the prerequisite testing in Sections 8 and 9 is performed in accordance with ANSI N510-1980.

TABLE 9.4-2 (Sheet 16)

Regulatory Guide 1.52 Position	WCGS
maintained until the residual refrigerant gas in the effluent is less than 0.01 ppm. Adsorber leak testing should be conducted (1) initially, (2) at least once per 18 months thereafter, (3) following removal of an adsorber sample for laboratory testing if the integrity of the adsorber section is affected, and (4) following painting, fire, or chemical release in any ventilation zone communicating with the system.	
6. Laboratory Testing Criteria for Activated Carbon	6. Laboratory Testing Criteria for Activated Carbon
a. The activated carbon adsorber section of the ESF atmosphere cleanup system should be assigned the decontamination efficiencies given in Table 2 for elemental iodine and organic iodides if the following conditions are met:	a. Complies, except that the representative samples will be laboratory tested in accordance with the requirements of ASTM D3803-1989.
(1) The adsorber section meets the conditions given in regulatory position C.5.d of this guide.	
(2) New activated carbon meets the physical property specifications given in Table 5.1 of ANSI N509-1976 (Ref. 1), and	Complies, except that new activated carbon meets the physical property specifications given in Table 5.1 of ANSI N509-1980.
(3) Representative samples of used activated carbon pass the laboratory tests given in Table 2.	
If the activated carbon fails to meet any of the above conditions, it should not be used in engineered-safety-feature adsorbers.	

TABLE 9.4-2 (Sheet 17)

Regulatory Guide 1.52 Position	WCGS
b. The efficiency of the activated carbon adsorber section should be determined by laboratory testing of representative samples of the activated carbon exposed simultaneously to the same service conditions as the adsorber section. Each representative sample should be not less than two inches in both length and diameter, and each sample should have the same qualification and batch test characteristics as the system adsorbent. There should be a sufficient number of representative samples located in parallel with the adsorber section to estimate the amount of penetration of the system adsorbent throughout its service life. The design of the samplers should be in accordance with the provisions of Appendix A of ANSI N509-1976 (Ref. 1). Where the system activated carbon is greater than two inches deep, each representative sampling station should consist of enough two-inch samples in series to equal the thickness of the system adsorbent. Once representative samples are removed for laboratory test, their positions in the sampling array should be blocked off. Laboratory tests of representative samples should be conducted, as indicated in Table 2 of this guide, with the test gas flow in the same direction as the flow during	b. Complies, except that the representative samples will be laboratory tested in accordance with the requirements of ASTM D3803-1989.

TABLE 9.4-2 (Sheet 18)

Regulatory Guide 1.52 Position	WCGS
service conditions. Similar laboratory tests should be performed on an adsorbent sample before loading into the adsorbers to establish an initial point for comparison of future test results. The activated carbon adsorber section should be replaced with new unused activated carbon meeting the physical property specifications of Table 5.1 of ANSI N509-1976 (Ref. 1) if (1) testing in accordance with the frequency specified in Footnote c of Table 2 results in a representative sample failing to pass the applicable test in Table 2 or (2) no representative sample is available for testing.	Complies, except the physical properties meet the specifications of Table 5.1 of ANSI N509-1980.

[1]The pertinent quality assurance requirements of Appendix B, "Quality Assurance Criteria for Nuclear Power Plants and Fuel Reprocessing Plants," to 10 CFR Part 50 apply to all activities affecting the safety-related functions of HEPA filters.

[2]The U S Department of Energy (USDOE) operates a number of filter test facilities qualified to perform HEPA filter efficiency tests. These facilities are listed in the current USDOE Environmental Safety and Health Information Bulletin for Filter Unit Inspection and Testing Service (Ref. 18).

*All statements apply to all three exhaust systems listed above, unless otherwise indicated.

TABLE 9.4-3

DESIGN COMPARISON TO REGULATORY POSITIONS OF REGULATORY GUIDE 1.140, REVISION 0, DATED MARCH 1978, TITLED "DESIGN, TESTING, AND MAINTENANCE CRITERIA FOR NORMAL VENTILATION EXHAUST SYSTEM AIR FILTRATION AND ADSORPTION UNITS OF LIGHT-WATER-COOLED NUCLEAR POWER PLANTS."

Design requirements of this Regulatory Guide are applicable to the following standardized power plant exhaust systems:

a. Condenser air removal filtration

b. Radwaste building exhaust

c. Access control exhaust

d. Containment atmospheric control

e. Containment purge

f. Auxiliary/fuel building normal exhaust

Design requirements for safety-related exhaust systems are discussed in Table 9.4-2.

Regulatory Guide 1.140 Position	WCGS
1. Environmental Design Criteria	1. Environmental Design Criteria
a. The design of each atmosphere cleanup system installed in a normal ventilation exhaust system should be based on the maximum anticipated operating parameters of temperature, pressure, relative humidity, and radiation levels. The cleanup system should be designed based on continuous operation for the expected life of the plant or the maximum anticipated service life of the cleanup system.	a. Complies.

TABLE 9.4-3 (Sheet 2)

Regulatory Guide 1.140 Position	WCGS
b. If the atmosphere cleanup system is located in an area of high radiation during normal plant operation, adequate shielding of components from the radiation source should be provided.	b. Complies.
c. The operation of any atmosphere cleanup system in a normal ventilation exhaust system should not deleteriously affect the expected operation of any engineered-safety-feature system that must operate after a design basis accident.	c. Complies.
d. The design of the atmosphere cleanup system should consider any significant contaminants such as dusts, chemicals, or other particulate matter that could deleteriously affect the cleanup system's operation.	d. Complies.
2. System Design Criteria	2. System Design Criteria
a. Atmosphere cleanup systems installed in normal ventilation exhaust systems need not be redundant nor designed to seismic Category I classification, but should consist of the following sequential components: (1) HEPA filters before the adsorbers, (2) iodine adsorbers (impregnated activated carbon or equivalent adsorbent such as metal zeolites), (3) ducts and dampers, (4) fans, and	a. Complies. Heaters or cooling coils are not required.

TABLE 9.4-3 (Sheet 3)

Regulatory Guide 1.140 Position	WCGS
(5) related instrumentation. If it is desired to reduce the particulate load on the HEPA filters and extend their service life, the installation of prefilters upstream of the initial HEPA bank is suggested. Consideration should also be given to the installation of a HEPA filter bank downstream of carbon adsorbers to retain carbon fines. Heaters or cooling coils used in conjunction with heaters should be used when the humidity is to be controlled before filtration.	
b. The volumetric air flow rate of a single cleanup train should be limited to approximately 30,000 ft^3/min. If a total system air flow in excess of this rate is required, multiple trains should be used. For ease of maintenance, a filter layout that is three HEPA filters high and ten wide is preferred.	b. Complies, except that air flow rate for auxiliary/fuel building normal exhaust is 32,000 cfm (multiple trains are not used due to space limitation).
c. Each atmosphere cleanup system should be locally instrumented to monitor and alarm pertinent pressure drops and flow rates in accordance with the recommendations of Section 5.6 of ERDA 76-21 (Ref. 3).	c. Complies. A differential pressure indicator controller modulates a damper downstream of the filter train to maintain a constant system resistance as the filters load up. This arrangement assures a constant system flow.

TABLE 9.4-3 (Sheet 4)

Regulatory Guide 1.140 Position	WCGS
differential	High and low pressure alarms provide indication of any abnormality in flow rates.
d. To maintain the radiation exposure to operating personnel as low as is reasonably achievable during plant maintenance, atmosphere cleanup systems should be designed to control leakage and facilitate maintenance in accordance with the guidelines of Regulatory Guide 8.8, "Information Relevant to Ensuring that Occupational Radiation Exposures at Nuclear Power Stations Will Be As Low As Is Reasonably Achievable" (Ref. 5).	d. Complies.
e. Outdoor air intake openings should be equipped with louvers, grills, screens, or similar protective devices to minimize the effects of high winds, rain, snow, ice, trash, and other contaminants on the operation of the system. If the atmosphere surrounding the plant could contain significant environmental contaminants, such as dusts and residues from smoke cleanup systems from adjacent coal burning power plants or industry, the design of the system should consider these contaminants and prevent them from affecting the operation of any atmosphere cleanup system.	e. Complies.

TABLE 9.4-3 (Sheet 5)

Regulatory Guide 1.140 Position	WCGS
f. Atmosphere cleanup system housings and ductwork should be designed to exhibit on test a maximum total leakage rate as defined in Section 4.12 of ANSI N509-1976 (Ref. 1). Duct and housing leak tests should be performed in accordance with the provisions of Section 6 of ANSI N510-1975 (Ref. 2).	f. Complies.
3. Component Design Criteria and Qualification Testing	3. Component Design Criteria and Qualification Testing
a. Adsorption units function efficiently at a relative humidity of 70% or less. If the relative humidity of the incoming atmosphere is expected to be greater than 70% during normal reactor operation, heaters or cooling coils used in conjunction with heaters should be designed to reduce the relative humidity of the incoming atmosphere to 70%. Heaters should be designed, constructed, and tested in accordance with the requirements of Section 5.5 of ANSI N509-1976 (Ref. 1) exclusive of sizing criteria.	a. Not applicable to these systems. See response to Regulatory Position 2.a. above.
b. The HEPA filters should be designed, constructed, and tested in accordance with the requirements of Section 5.1 of ANSI N509-1976 (Ref. 1). Each HEPA filter should be tested for penetration of dioctyl phthalate (DOP) in accordance with the provisions of MIL-F-51068 (Ref. 6) and MIL-STD-282 (Ref. 7).	b. Complies.

TABLE 9.4-3 (Sheet 6)

Regulatory Guide 1.140 Position	WCGS
c. Filter and adsorber mounting frames should be designed and constructed in accordance with the provisions of Section 5.6.3 of ANSI N509-1976 (Ref. 1).	c. Complies.
d. Filter and adsorber banks should be arranged in accordance with the recommendations of Section 4.4 of ERDA 76-21 (Ref. 3).	d. Complies.
e. System filter housings, including floors and doors, and electrical conduits, drains, and piping installed inside filter housings should be designed and constructed in accordance with the provisions of Section 5.6 of ANSI N509-1976 (Ref. 1).	e. Complies.
f. Ductwork associated with the atmosphere cleanup system should be designed, constructed, and tested in accordance with the provisions of Section 5.10 of ANSI N509-1976 (Ref. 1).	f. Complies.
g. The adsorber section of the atmosphere cleanup system may contain any adsorbent material demonstrated to remove gaseous iodine (elemental iodine and organic iodides) from air at the required efficiency. Since impregnated activated carbon is commonly used, only this adsorbent is discussed in this guide. Each original or replacement batch of impregnated activated carbon	g. Complies.

TABLE 9.4-3 (Sheet 7)

Regulatory Guide 1.140 Position	WCGS
used in the adsorber section should meet the qualification and batch test results summarized in Table 1 of this guide.	
If an adsorbent other than impregnated activated carbon is proposed or if the mesh size distribution is different from the specifications in Table 1, the proposed adsorbent should have demonstrated the capability to perform as well as or better than activated carbon in satisfying the specifications in Table 1.	Complies, except adsorbent meets the specifications of ANSI N509-1980.
If impregnated activated carbon is used as the adsorbent, the adsorber system should be designed for an average atmosphere residence time of 0.25 sec per two inches of adsorbent bed.	
h. Adsorber cells should be designed, constructed, and tested in accordance with the requirements of Section 5.2 of ANSI N509-1976 (Ref. 1).	h. Complies.
i. The system fan and motors, mounting, and ductwork connections should be designed, constructed, and tested in accordance with the requirements of Sections 5.7 and 5.8 of ANSI N509-1976 (Ref. 1).	i. Complies.
j. The fan or blower used in the atmosphere cleanup system should be capable of operating under the environmental conditions postulated.	j. Complies.

TABLE 9.4-3 (Sheet 8)

Regulatory Guide 1.140 Position	WCGS
k. Ducts and housings should be laid out with a minimum of ledges, protrusions, and crevices that could collect dust and moisture and that could impede personnel or create a hazard to them in the performance of their work. Straightening vanes should be installed where required to ensure representative air flow measurement and uniform flow distribution through cleanup components.	k. Complies.
l. Dampers should be designed, constructed, and tested in accordance with the provisions of Section 5.9 of ANSI N509-1976 (Ref. 1).	l. Complies. Dampers are designed, constructed, tested in accordance codes and standards comparable with the provisions of Section 5.9 of ANSI N509-1976.
4. Maintenance	4. Maintenance
a. Accessibility of components and maintenance should be considered in the design of atmosphere cleanup systems in accordance with the provisions of Section 2.3.8 of ERDA 76-21 (Ref. 3) and Section 4.7 of ANSI N509-1976 (Ref. 1).	a. Complies.
b. For ease of maintenance, the system design should provide for a minimum of three feet from mounting frame to mounting frame between banks of components. If components are to be replaced, the dimensions to be provided should be the maximum length of the component plus a minimum of three feet.	b. Complies where internal removal of component is required.

TABLE 9.4-3 (Sheet 9)

Regulatory Guide 1.140 Position	WCGS
c. The system design should provide for permanent test probes with external connections in accordance with the provisions of Section 4.11 of ANSI N509-1976 (Ref. 1).	c. Complies.
d. The cleanup components (e.g., HEPA filters and adsorbers) should be installed after construction is completed.	d. Complies.
5. In-Place Testing Criteria	5. In-Place Testing Criteria
a. A visual inspection of the atmosphere cleanup system and all associated components should be made before each in-place airflow distribution test, DOP test, or activated carbon adsorber section leak test in accordance with the provisions of Section 5 of ANSI N510-1975 (Ref. 2).	a. Complies.
b. The airflow distribution to the HEPA filters and iodine adsorbers should be tested inplace for uniformity initially and after maintenance affecting the flow distribution. The distribution should be only within + 20% of the average flow per unit when tested in accordance with the provisions of Section 9 of "Industrial Ventilation" (Ref. 8) and Section 8 of ANSI N510-1975 (Ref. 2).	b. Complies, except that testing conducted in accordance with ANSI N510 utilizes the 1980 edition in lieu of the 1975 edition. However, air flow distribution testing is performed on the downstream side of the first HEPA filters in lieu of each filter as stated in Section 8.1 of ANSI N510-1980.

TABLE 9.4-3 (Sheet 10)

Regulatory Guide 1.140 Position	WCGS
c. The in-place DOP test for HEPA filters should conform to Section 10 of ANSI N510-1975 (Ref. 2). HEPA filter sections should be tested in place initially and at a frequency not to exceed 18 months thereafter (during a scheduled reactor shutdown is acceptable). The HEPA filter bank upstream of the adsorber section should also be tested following painting, fire, or chemical release in any ventilation zone communicating with the system in such a manner that the HEPA filters could become contaminated from the fumes, chemicals, or foreign materials. DOP penetration tests of all HEPA filter banks should confirm a penetration of less than 0.05% at rated flow. A filtration system satisfying this condition can be considered to warrant a 99% removal efficiency for particulates. HEPA filters that fail to satisfy the in-place test criteria should be replaced with filters qualified pursuant to regulatory position C.3.b of this guide. If the HEPA filter bank is entirely of only partially replaced, an in-place DOP test should be conducted. If any welding repairs are necessary on, within, or adjacent to the ducts, housing, or mounting frames, the filters and adsorbers should be removed from the housing during such repairs.	c. Complies, except that an acceptance criteria of less than 1.0 percent in-place penetration and bypass leakage is employed to be consistent with the acceptance criteria utilized for the engineered safety-feature filtration units. This requirement, although less than the required .05 percent, still allows a conservative design, as the filter efficiency is assumed to be 95 percent in accident analyses. The in-place DOP testing is performed in accordance with Section 10 of ANSI N510-1975, but prerequisite testing on Sections 8 and 9 is performed in accordance with ANSI N510-1980, except that DOP is not injected between the two HEPA banks. This requirement does not apply to the Containment Atmospheric Control System.

TABLE 9.4-3 (Sheet 11)

Regulatory Guide 1.140 Position	WCGS
These repairs should be completed prior to periodic testing, filter inspection, and in-place testing. The use of silicone sealants or any other temporary patching material on filters, housing, mounting frames, or ducts should not be allowed.	
d. The activated carbon adsorber section should be leak-tested with a gaseous halogenated hydrocarbon refrigerant in accordance with Section 12 of ANSI N510-1975 (Ref. 2) to ensure that bypass leakage through the adsorber section is less than 0.05%. After the test is completed, air flow through the unit should be maintained until the residual refrigerant gas in the effluent is less than 0.01 ppm. Adsorber leak testing should be conducted (1) initially, (2) at a frequency not to exceed 18 months thereafter (during a scheduled reactor shutdown is acceptable), (3) following removal of an adsorber sample for laboratory testing if the integrity of the adsorber section is affected, and (4) following painting, fire, or chemical release in any ventilation zone communicating with the system in such a manner that the charcoal adsorbers could become contaminated from the fumes, chemicals, or foreign materials.	d. Complies, except that the prerequisite testing in Sections 8 and 9 is performed in accordance with ANSI N510-1980, and that this requirement does not apply to the Containment Atmospheric Control Systems.

TABLE 9.4-3 (Sheet 12)

Regulatory Guide 1.140 Position	WCGS
6. Laboratory Testing Criteria for Activated Carbon	6. Laboratory Testing Criteria for Activated Carbon
a. The activated carbon adsorber section of the atmosphere cleanup system should be assigned the decontamination efficiencies given in Table 2 for radio-iodine if the following conditions are met: (1) The adsorber section meets the conditions given in regulatory position C.5.d of this guide, (2) New activated carbon meets the physical property specifications given in Table 1 and (3) Representative samples of used activated carbon pass the laboratory tests given in Table 2. If the activated carbon fails to meet any of the above conditions, it should not be used in adsorption units.	a. Complies, except that the representative samples will be laboratory tested in accordance with the requirements of ASTM D-3803 as recommended by the associated Final Technical Evaluation Report for the NRC/INEL Activated Carbon Testing Program, Report No. EGG-CS-7643, by C.D. Scarpellino and C.W. Sill of EG&G Idaho, Inc. Complies, except that physical property of new activated carbon meets the physical property specifications given in Table 5.1 of ANSI N509-1980.
b. The efficiency of the activated carbon adsorber section should be determined by laboratory testing of representative samples of the activated carbon exposed simultaneously to the same service conditions as the adsorber section. Each representative sample should not be less than two inches in both length and diameter, and each sample should have the same qualification and batch test characteristics as the system adsorbent.	b. Complies, except that the representative samples will be laboratory tested in accordance with the requirements of ASTM-D-3803 as recommended by the associated Final Technical Evaluation Report for the NRC/INEL Activated Carbon Testing Program, Report No. EGG-CS-7643, by C.D. Scarpellino and C.W. Sill of EG&G Idaho, Inc.

TABLE 9.4-3 (Sheet 13)

Regulatory Guide 1.140 Position	WCGS
There should be a sufficient number of representative samples located in parallel with the adsorber section to estimate the amount of penetration of the system adsorbent throughout its service life. The design of the samplers should be in accordance with the provisions of Appendix A of ANSI N509-1976 (Ref. 1). Where the system activated carbon is greater than two inches deep, each representative sampling station should consist of enough two-inch samples in series to equal the thickness of the system adsorbent. Once representative samples are removed for laboratory test, their positions in the sampling array should be clocked off. Laboratory tests of representative samples should be conducted, as indicated in Table 2 of this guide, with the test gas flow in the same direction as the flow during service conditions. Similar laboratory tests should be performed on an adsorbent sample before loading into the adsorbers to establish an initial point for comparison of future test results. The activated carbon adsorber section should be replaced with new unused activated carbon meeting the physical property specifications of Table 1 if (1) testing in accordance with the frequency	

TABLE 9.4-3 (Sheet 14)

Regulatory Guide 1.140 Position	WCGS
specified in Footnote c of Table 2 results in a representative sample failing to pass the applicable test in Table 2 or (2) no representative sample is available for testing.	

*All statements apply to all exhaust systems listed above, unless otherwise indicated.

TABLE 9.4-4

DESIGN DATA FOR CONTROL BUILDING HVAC SYSTEM COMPONENTS

I. Control Building Supply System

A. Supply Air Unit

Quantity	1
Air flow, cfm	15,000
Static pressure, in. w.g.	5.39
Motor horsepower, hp	25
Total cooling capacity, Btu/hr	1,114,000
Total heating capacity, Btu/hr	1,479,000
Chilled water flow, gpm	131
Hot water flow, gpm	73
Design codes and standards	
Unit	MS
Motor	NEMA
Coil	MS
Seismic design	Non-Category I

B. Control Room Electric Duct Heater

Quantity	1
Heater rating, kW	35
Design standards	MS
Seismic design	Non-Category I

C. Access Control Supply System Booster Coil

Quantity	1
Heater rating, kW	7
Design standards	MS
Seismic design	Non-Category I

D. Access Control Supply System Booster Coil

Quantity	1
Heater rating, kW	8
Design standards	MS
Seismic design	Non-Category I

II. Control Building Exhaust System

Quantity	2
Type	Vaneaxial
Air flow, cfm each	8,900
Total pressure, in. w.g.	4.09

TABLE 9.4-4 (Sheet 2)

Motor horsepower, hp	10
Design codes and standards	
Fan	MS
Motor	NEMA
Seismic design	Non-Category I

III. Access Control Exhaust System

A. Adsorber Train

Quantity	1
Particulate filters	4
HEPA filters	8
Charcoal, lbs	1,070 (approx.)
Design criterion (unit)	Reg. Guide 1.140
Seismic design	Non-Category I

B. Fans

Quantity	2
Type	Centrifugal
Air flow, cfm each	6,000
Static pressure, in. w.g.	9.40
Motor horsepower, hp	15
Design codes and standards	
Fan	MS
Motor	NEMA
Seismic design	Non-Category I

IV. Control Room Air-Conditioning System

A. Control Room Air-Conditioning Unit

Quantity	2
Flow, cfm each	20,400
Static pressure, in. w.g.	4.00
Motor horsepower, hp	40
Total cooling capacity, Btu/hr each	549,720
Compressor power input, kW	38.5
Condenser water flow, gpm each	140
Fouling factor (service water)	.002
Design codes and standards	
Unit	IEEE-323 and 344
Condenser	ASME Section III, Class 3 (water side), ASME Section VIII, Div. 1, refrigerant side)
Seismic design	Category I

B. Control Room Filtration System Adsorber Train

Quantity	2
Particulate filters, each	2
HEPA filters, each	4

TABLE 9.4-4 (Sheet 3)

Charcoal, lbs. each	270 (approx.)
Design criterion	Reg. Guide 1.52
Seismic design	Category I

C. Control Room Filtration Fan

Quantity	2
Air flow, cfm each	2,000
Static pressure, in. w.g.	6.80
Motor horsepower, hp	5.0
Design codes and standards	
Fan	MS
Motor	IEEE-323
Seismic design	Category I

D. Control Room Pressurization System Adsorber Train

Quantity	2
Demisters, each	1
HEPA filters, each	2
Charcoal, lbs. each	135 (approx.)
Electric heater, quantity each	1
Heater rating, kW each	5
Design codes and standards	
Unit	Reg. Guide 1.52
Heater	IEEE-323
Seismic design	Category I

E. Control Room Pressurization System Fan

Quantity	2
Air flow, cfm. each	2,200
Static pressure, in. w.g.	8.5
Motor horsepower, hp	7.5
Design codes and standards	
Fan	MS
Motor	IEEE-323
Seismic design	Category I

V. Class IE Electrical Equipment Air-Conditioning System

Quantity	2
Flow, cfm each	11,500
Static pressure, in. w.g.	3.5
Motor horsepower, hp	15.0
Total cooling capacity, Btu/hr each	398,400
Compressor power input, kW	28.2

TABLE 9.4-4 (Sheet 4)

Condenser water flow, gpm each	66
Fouling factor (service water)	.002
Design codes and standards	
Unit	IEEE-323 and 344
Condenser	ASME Section III, Class 3 (water side), ASME Section VIII, Div. 1, (refrigerant side)
Seismic design	Category I

VI. Access Control Air-Conditioning System

A. Access Control Fan Coil Unit

Quantity	1
Air flow, cfm	5,000
Static pressure, in. w.g.	4.93
Motor horsepower, hp	7.50
Total cooling capacity, Btu/hr	150,000
Fouling factor (chilled water)	0.0005
Chilled water flow, gpm	18
Design codes and standards	
Unit	MS
Motor	NEMA
Coil	MS
Seismic design	Non-Category I

B. Access Control Air-Conditioning System Booster Coil

Quantity	1
Heating rating, kW	16
Design standards	MS
Seismic design	Non-Category I

C. Mechanical Equipment Room Booster Coil

Quantity	2
Heater Rating, kW each	6
Design standards	MS
Seismic design	Non-Category I

VII. Unit Heaters

A. Upper Cable Spreading Room Unit Heater

Quantity	2
Type	Electric
Heater rating, kW each	40
Design standards	MS
Seismic design	Non-Category I

TABLE 9.4-4 (Sheet 5)

B. Lower Cable Spreading Room Unit Heater

Quantity	2
Type	Electric
Heater rating, kW each	10
Design standards	MS
Seismic design	Non-Category I

C. ESF Switchgear Room Unit Heater

Quantity	2
Type	Electric
Heater rating, kW each	7.5
Design standards	MS
Seismic design	Non-Category I

D. Pipe Chase and Tank Area Unit Heater

Quantity	3
Type	Electric
Heater rating, kW each	5
Design standards	MS
Seismic design	Non-Category I

E. Control Room Air-Conditioning Equipment Room Unit Heater

Quantity	1
Type	Electric
Heater rating, kW	25
Design standards	MS
Seismic design	Non-Category I

F. Control Room Air-Conditioning Equipment Room Unit Heater

Quantity	1
Type	Electric
Heater rating, kW	15
Design standards	MS
Seismic design	Non-Category I

VIII. Counting Room Recirculation System

A. Counting Room Fan Coil Unit

Quantity	1
Air flow, cfm	3,500
Static pressure, in. w.g.	5.52

TABLE 9.4-4 (Sheet 6)

Motor horsepower, hp	7.5
Total cooling capacity, Btu/hr	90,900
Chilled water flow, gpm	12.12
Design codes and standards	
Unit	MS / UL
Motor	MS / NEMA
Coil	MS / ARI
Seismic Design	Non-Category I

B. Counting Room Filter Unit

Quantity	1
Particulate filters	1
HEPA filters	1
Design codes and standards (unit)	MS / Ul
Seismic design	Non-Category I

IX. SAS Room Cooling System

A. SAS Room Air Handling Unit

Quantity	1
Air Flow, cfm	2,200
Static pressure, in.w.g	1.5 (ESP)
Motor horsepower, hp	2.0
Total cooling capacity, Btu/hr	59,400
Design Codes and Standards	
Unit	MS
Motor	NEMA
Coil	MS
Seismic Design	Non-Category I

B. SAS Room Condensing Unit

Quantity	1
Condenser fan airflow, cfm	5,000
Condenser fan motor, hp	1/2
Compressor motor, hp	11-1/2
Condenser capacity, Btu/hr	67,440
Design codes and standards	
Condenser	MS
Compressor	MS

TABLE 9.4-5

SINGLE FAILURE ANALYSES
CONTROL BUILDING HVAC SYSTEMS

Component	Malfunction	Consequences
I. Control Room Air-Conditioning System		
Particulate filters	Excessive dust loading, reduced airflow	System is sized for full flow with fully loaded filters.
Air-conditioning unit casing	Casing failure, air bypasses coil (evaporator)	Partial loss of cooling; redundant unit is available for cooling.
Fan	Fails to start	Loss of one unit; redundant fan is available.
Compressor (refrigerant)	Fails to operate	Loss of one system; redundant system is available for cooling.
Condenser	Tube rupture	Loss of condenser; redundant system is available.
Piping (refrigerant)	Rupture, loss of refrigerant	Loss of one system; redundant system is available.
System Isolation Dampers	Damper fails to open; flow path not available.	Loss of one system; redundant system is available.
II. Control Room Filtration System		
Particulate filters	Excess dust loading; airflow is reduced	Reduced cleanup capabilities; redundant system is available for cleanup.
Fan	Fails to start	One unit is out of service; redundant unit is available for cleanup.

TABLE 9.4-5 (Sheet 2)

Component	Malfunction	Consequences
System isolation damper	Damper fails to open; flow path not available.	Loss of one system; redundant system is available.
III. Control Room Pressurization System		
Particulate filters	Excessive dust loading, reduced airflow	System is sized for full flow with fully loaded filters
Fan	Fails to start	One unit is out of service; redundant unit is available for operation.
System isolation dampers	Damper fails to open; flow path not available.	Loss of one system; redundant system is available.
IV. Class IE Electrical Equipment Air-Conditioning System		
Particulate filters	Excessive dust loading, reduced airflow	System is sized for full flow with fully loaded filters.
Air-conditioning unit casing	Casing failure, air bypasses coil (evaporator)	Partial loss of cooling; redundant unit is available for cooling.
Fan	Fails to start	Loss of one unit; redundant fan is available.
Compressor (refrigerant)	Fails to operate	Loss of one system; redundant system is available.
Piping (refrigerant)	Rupture, loss of refrigerant	Loss of one system; redundant system is available.

TABLE 9.4-5 (Sheet 3)

Component	Malfunction	Consequences
V. Control building supply system, control building exhaust system, and access control exhaust system penetrations of the common auxiliary/control building boundary		
Building isolation dampers	Damper fails to close	Loss of isolation one one side of penetration; redundant damper closes.

TABLE 9.4-6

DESIGN DATA FOR FUEL BUILDING HVAC SYSTEM COMPONENTS

I. Fuel Building Supply Air System

A. Supply Air Heating Coil

Quantity	1
Total heating capacity, Btu/hr	2,196,800
Hot water flow, gpm	110
Design standards	MS
Seismic design	Non-Category I

B. Supply Air Unit

Quantity	2
Air flow, cfm each	18,000
Static pressure, in. w.g. each	6.4
Motor, hp each	25
Total cooling capacity, Btu/hr each	477,900
Chilled water flow rate, gpm	64
Design codes and standards	
Unit	MS
Coil	MS
Motor	NEMA
Seismic design	Non-Category I

C. Fuel Handling Area Chilled Water Coil

Quantity	1
Total cooling capacity Btu/hr	175,500
Chilled water flow, gpm	28
Design standards	MS
Seismic design	Non-Category I

II. Fuel Storage Pool Pump Room Coolers

Quantity	2
Air flow, cfm each	3,500
Static pressure, in. w.g. each	0.92
Motor horsepower, bhp each	2
Total cooling capacity Btu/hr each	72,000
Water flow rate, gpm each	29
Fouling factor	0.002
Tube material	90/10 Cu-Ni &/or ASME SB-676/UNS NO8367
Design codes and standards	
Unit	MS
Coil	ASME Section III, Class 3
Motor	IEEE-323
Seismic design	Category I

TABLE 9.4-6 (Sheet 2)

III. Unit Heaters

A. Lower Level Unit Heater (East Wall)

Quantity	1
Heating capacity, Btu/hr	168,900
Hot water flow rate, gpm	9
Design standards	
Motor	NEMA
Coil	MS
Seismic design	Non-Category I

B. Lower Level Unit Heater (West Wall)

Quantity	1
Heating capacity, Btu/hr	168,900
Hot water flow rate, gpm	9
Design standards	
Motor	NEMA
Coil	MS
Seismic design	Non-Category I

C. Lower Level Unit Heater (South Wall)

Quantity	1
Heating capacity, Btu/hr each	126,700
Hot water flow rate, gpm each	7
Design standards	
Motor	NEMA
Coil	MS
Seismic design	Non-Category I

D. Upper Level Unit Heater

D.1.

Quantity	2
Heating capacity, Btu/hr each	260,000
Hot water flow rate, gpm each	13
Design standards	
Motor	NEMA
Coil	MS
Seismic design	Non-Category I

D.2.

Quantity	4
Rating, kw	30
Design Standard	MS
Seismic Design	NON-Category I

E. Stairway Unit Heater (Electric)

Quantity	1
Rating, kW	15
Seismic Category	Non-Category I

TABLE 9.4-6 (Sheet 3)

IV. Emergency Exhaust System

A. Adsorber Train

Quantity	2
Particulate filters, each	6
HEPA filters, each	12
Charcoal, lbs each	1,937 (approx.)
Design criterion (unit)	Reg. Guide 1.52
Seismic design	Category I

B. Electric Heaters

Quantity	2
Rating, kW each	37
Design standard	IEEE-323
Seismic design	Category I

C. Fans

Quantity	2
Type	Centrifugal
Air flow, cfm each	9,000*
Static pressure, in. w.g. each	11.75
Motor brake horsepower, bhp each	25
Design codes and standards	
Fan	MS
Motor	IEEE-323

*Technical Specifications currently require an emergency exhaust flowrate of 6500 cfm + 650. At 6500 cfm and a fan speed of 2250 rpm, the static pressure of each fan is 10.0 in w.g.

TABLE 9.4-7

SINGLE-FAILURE ANALYSIS - EMERGENCY EXHAUST SYSTEM, FUEL STORAGE POOL PUMP ROOM COOLERS, AND FUEL BUILDING HVAC ISOLATION

Component	Malfunction	Consequences
Exhaust system filter/ adsorber unit particulate filters	Excess dust loading; airflow is reduced	System is sized for full-flow with fully loaded filters.
Exhaust fan	Fails to start	One unit is out of service; redundant unit is capable of providing cleanup.
Exhaust system discharge damper	Fails closed; flow path is not available.	One unit is out of service; redundant unit is capable of providing cleanup.
Auxiliary/fuel building normal exhaust system isolation dampers	Damper fails to close; flow path is not isolated	One damper is out of service; redundant damper is capable of providing required closure.
Fuel building supply system ductwork isolation dampers	Damper fails to close; flow path is not isolated	One damper is out of service; redundant damper is capable of providing required closure.
Pump room cooler fan	Fails to start	One unit is out of service; redundant unit is capable of providing cooling requirements.
Fuel Building emergency exhaust system isolation dampers	Damper fails to open following FBVIS signal	One damper is out of service; redundant damper is capable of providing required opening.
	Damper fails to achieve its closed position following an SIS signal (i.e. damper is opened too much)	One damper is out of service; redundant damper is capable of providing required opening.

TABLE 9.4-8

DESIGN DATA FOR AUXILIARY BUILDING HVAC SYSTEM COMPONENTS

I.	Auxiliary Building Supply Air Unit	
	Quantity	1
	Air flow, cfm	10,800
	Static pressure, in. w.g.	4.84
	Motor horsepower, hp	15
	Total cooling capacity, Btu/hr	802,000
	Total heating capacity, Btu/hr	1,167,000
	Chilled water flow, gpm	95
	Hot water flow, gpm	60
	Design codes and standards	
	Unit	MS
	Motor	NEMA
	Codes	MS
	Seismic design	Non-Category I
II.	Main Steam Tunnel Supply Air Unit	
	Quantity	1
	Air flow, cfm	20,000
	Static pressure, in. w.g.	5.20
	Motor horsepower, hp	40
	Heating capacity, Btu/hr	2,186,000
	Hot water flow rate, gpm	109
	Cooling capacity, Btu/hr Sensible	807,300
	Total	1,440,300
	Chilled water flow, gpm	106
	Design codes and standards	
	Unit	MS
	Motor	NEMA
	Codes	MS
	Seismic design	Non-Category I
III.	Auxiliary/Fuel Building Normal Exhaust System	
	A. Adsorber Train	
	Quantity	1
	Particulate filters, each	25
	HEPA filters, each	50
	Charcoal, lbs each	6,300
	Design criterion	Reg. Guide 1.140
	Seismic design	Non-Category I

TABLE 9.4-8 (Sheet 2)

B. Fans

Quantity	2
Type	Centrifugal
Air flow, cfm each	32,000
Static pressure, in. w. g.	13.72
Motor horsepower, hp each	100
Design codes and standards	
Fan	MS
Motor	NEMA
Seismic design	Non-Category I

C. Decontamination Tanks Exhaust Scrubber

Quantity	2
Flow, cfm each	3,200
Static pressure, in. w.g.	7.00
Motor horsepower, hp	7.5
Water flow rate gpm each	0.50
Contaminant removal efficiency, %	90
Housing material	Stainless steel
Design codes and standards	
Fan	MS
Motor	NEMA
Seismic design	Non-Category I

D. Scrubber Makeup Air Duct Heater

Quantity	2
Heater rating, kW each	90
Design standards	MS
Seismic design	Non-Category I

E. Auxiliary Building Fume Hood Booster Fan

Quantity	1
Type	Vane axial
Air flow, CFM	1180
Static pressure, in. w.g.	.25
Motor horsepower, hp	.33
Seismic design	Non-Category I

TABLE 9.4-8 (Sheet 3)

IV. Main Steam Tunnel Exhaust System

Quantity	2
Air flow, cfm each	23,000
Static pressure, in. w.g.	4
Motor horsepower, hp each	25
Design codes and standards	
Fan	MS
Motor	NEMA
Seismic design	Non-Category I

V. Nonessential Recirculation Units

A. Electrical Equipment Room Fan Coil Units

1. Unit SGL02

Quantity	1
Air flow, cfm	3,100
Static pressure in. w.g.	3.52
Motor horsepower, hp	5
Total cooling capacity, Btu/hr	164,000
Chilled water flow rate, gpm	20
Design codes and standards	
Unit	MS
Motor	NEMA
Coil	MS
Seismic design	Non-Category I

2. Unit SGL20

Quantity	1
Air flow, cfm	13020
Total Static pressure, in.w.g.	3.35
Motor horsepower, hp	15
Total cooling capacity, BTU/HR	381,000
Chilled water flow rate, gpm	40
Design codes and standards	
Unit	MS
Motor	NEMA
Coil	MS
Seismic design	Non-Category I

TABLE 9.4-8 (Sheet 4)

B. Component Cooling Water Pump Room Fan Coil Unit

Quantity	2
Air flow, cfm	4,000
Static pressure, in. w.g.	3.22
Motor horsepower, hp	5
Total cooling capacity, Btu/hr	300,000
Chilled water flow rate, gpm	35
Design codes and standards	
Unit	MS
Motor	NEMA
Coil	MS
Seismic design	Non-Category I

C. Ground Floor Corridor Fan Coil Unit

Quantity	1
Flow, cfm	2,600
Static pressure, in. w.g.	3.27
Motor horsepower, hp	3
Total cooling capacity, Btu/hr	137,400
Chilled water flow rate, gpm	16
Design codes and standards	
Unit	MS
Motor	NEMA
Coil	MS
Seismic design	Non-Category I

D. Hot Machine Shop and Hot Instrument Shop Fan Coil Unit

Quantity	1
Flow, cfm	1,100
Static pressure, in. w.g.	2.30
Motor horsepower, hp	1.5
Total cooling capacity, Btu/hr	58,000
Chilled water flow rate, gpm	7
Design codes and standards	
Unit	MS
Motor	NEMA
Coil	MS
Seismic design	Non-Category I

TABLE 9.4-8 (Sheet 5)

E. Normal Charging Pump Room Fan Coil Unit

Quantity	1
Air flow, cfm	5,500
Static pressure, in. w.g.	2.5
Motor horsepower, hp	5
Total cooling capacity, Btu/hr	250,000
Chilled water flow rate, gpm	24
Design codes and standards	
Unit	MS
Motor	NEMA
Coil	MS
Seismic design	Non-Category I

F. Basement Corridor Fan Coil Unit

Quantity	1
Flow, cfm	900
Static pressure, in. w.g.	2.30
Motor horsepower, hp	1.5
Total cooling capacity, Btu/hr	49,000
Chilled water flow rate, gpm	6
Design codes and standards	
Unit	MS
Motor	NEMA
Coil	MS
Seismic design	Non-Category I

VI. Safety-Related Recirculation Units

A. Safety-Injection Pump Room Cooler

Quantity	2
Air Flow, cfm each	10,100
Static pressure, in. w.g.	1.30
Motor horsepower, hp each	10
Total cooling capacity, Btu/hr each	220,000
Water flow rate, gpm each	88
Fouling factor	0.002
Tube material	90/10 copper-nickel &/or ASME SB-676/UNS NO8367

TABLE 9.4-8 (Sheet 6)

Design codes and standards	
Unit	MS
Motor	IEEE-323
Coil	ASME Section III, Class 3
Seismic design	Category I

B. RHR Pump Room Cooler

Quantity	2
Air Flow, cfm each	10,100
Static pressure, in. w.g.	1.30
Motor horsepower, hp each	10
Total cooling capacity, Btu/hr each	220,000
Water flow rate, gpm each	88
Fouling factor	0.002
Tube material	90/10 copper-nickel &/or ASME SB-676/UNS NO8367
Design codes and standards	
Unit	MS
Motor	IEEE-323
Coil	ASME Section III, Class 3
Seismic Design	Category I

C. Component Cooling Water Pump Room Cooler

Quantity	2
Air Flow, cfm each	14,679
Static pressure, in. w.g.	1.70
Motor horsepower, hp each	15
Total cooling capacity, Btu/hr each	320,000
Water flow rate, gpm each	128
Fouling factor	0.002
Tube material	AL-6XN SB-676 N-438-2

TABLE 9.4-8 (Sheet 7)

Design codes and standards	
Unit	MS
Motor	IEEE-323
Coil	ASME Section III, Class 3
Seismic design	Category I

D. Containment Spray Pump Room Cooler

Quantity	2
Air Flow, cfm each	10,000
Static pressure, in. w.g.	1.30
Motor horsepower, hp each	10
Total cooling capacity, Btu/hr each	220,000
Water flow rate, gpm each	88
Fouling factor	0.002
Tube material	90/10 copper-nickel &/or ASME SB-676/UNS NO8367
Design codes and standards	
Unit	MS
Motor	IEEE-323
Coil	ASME Section III, Class 3
Seismic design	Category I

E. Auxiliary Feedwater Pump Room Cooler

Quantity	2
Air Flow, cfm each	14,679
Static pressure, in. w.g.	1.30
Motor brake horsepower, hp each	10
Total cooling capacity, Btu/hr each	320,000
Water flow rate, gpm each	128
Fouling factor	0.002
Tube Material	AL-6XN SB-676 N-438-2
Design codes and standards	
Unit	MS
Motor	IEEE-323
Coil	ASME Section III, Class 3
Seismic design	Category I

TABLE 9.4-8 (Sheet 8)

F. Penetration Room Cooler

Quantity	2
Air Flow, cfm each	18,300
Static pressure, in. w.g.	2.16
Motor capability, hp each	30
Total cooling capacity, Btu/hr each	170,000
Water flow rate, gpm each	100
Fouling factor	0.002
Tube material	90/10 copper-nickel &/or ASME SB-676/UNS NO8367
Design codes and standards	
Unit	MS
Motor	IEEE-323
Coil	ASME Section III, Class 3
Seismic design	Category I

G. Charging Pump Room Cooler

Quantity	2
Air Flow, cfm each	14,679
Static pressure, in. w.g.	1.30
Motor horsepower, hp each	10.0
Total cooling capacity, Btu/hr each	320,000
Water flow rate, gpm each	128
Fouling factor	0.002
Tube material	AL-6XN SB-676 N-438-2
Design codes and standards	
Unit	MS
Motor	IEEE-323
Coil	ASME Section III, Class 3
Seismic design	Category I

VII. Unit Heaters

A. Auxiliary Building Basement Corridor Unit Heater

TABLE 9.4-8 (Sheet 9)

Quantity	2
Heating capacity, Btu/hr each	60,000
Hot water flow, gpm each	3
Design standards	
Motor	NEMA
Coil	MS
Seismic design	Non-Category I

B. Auxiliary Building Hot Instrument Shop Unit Heater

Quantity	1
Heating capacity, Btu/hr	80,000
Hot water flow, gpm	4
Design standards	
Motor	NEMA
Coil	MS
Seismic design	Non-Category I

C. Auxiliary Building Decontamination Room Unit Heater

Quantity	1
Heating capacity, Btu/hr	100,000
Hot water flow, gpm	5
Design standards	
Motor	NEMA
Coil	MS
Seismic design	Non-Category I

D. Auxiliary Building Hot Machine Shop Unit Heater

Quantity	2
Heating capacity, Btu/hr each	80,000
Hot water flow, gpm each	4
Design standards	
Motor	NEMA
Coil	MS
Seismic design	Non-Category I

TABLE 9.4-8 (Sheet 10)

E. Auxiliary Building Corridor Unit Heater

Quantity	2
Heating capacity, Btu/hr each	80,000
Hot water flow, gpm each	4
Design standards	
Motor	NEMA
Coil	MS
Seismic design	Non-Category I

F. Auxiliary Building HVAC Equipment Room Unit Heater

Quantity	3
Heating capacity, Btu/hr each	100,000
Hot water flow, gpm each	5
Design standards	
Motor	NEMA
Coil	MS
Seismic design	Non-Category I

G. Auxiliary Building Containment Personnel Access Area Unit Heater

Quantity	2
Heating capacity, Btu/hr each	60,000
Hot water flow, gpm each	3
Design standards Motor	NEMA
Coil	MS
Seismic design	Non-Category I

H. Auxiliary Building Boric Acid Storage Tank Area Unit Heater

Quantity	2
Type	Electric
Heating rating, kW each	15
Design standards	MS
Seismic design	Non-Category I

TABLE 9.4-8 (Sheet 11)

I. Pipe Chase Unit Heater

Quantity	2
Type	Electric
Heater rating, kW each	5
Design standards	MS
Seismic design	Non-Category I

J. Pipe Chase Unit Heater

Quantity	4
Type	Electric
Heater rating, kW each	10
Design standards	MS
Seismic design	Non-Category I

VIII. Access Tunnel Transfer Fan

Quantity	1
Air flow, cfm	250
Static pressure, in w.g.	0.82
Motor horsepower, hp	0.25
Design codes and standards	
Fan	MS
Motor	NEMA
Seismic design	Non-Category I

IX. I&C Hot Shop Air-Conditioning Unit

Quantity	1
Type	Room Air-Conditioner
Air Flow, cfm	555-675
Total Cooling Capcity, Btu/hr	30,500
Power Input, KW	4.3-4.7
Design Standards	ARI AMCA MS
Seismic Design	Non-Category I

TABLE 9.4-9

SINGLE-FAILURE ANALYSES - PUMP ROOM COOLERS, PENETRATION ROOM COOLERS AND EMERGENCY EXHAUST SYSTEM*

Component	Malfunction	Consequences
Fan	Fails to start	One unit is out of service; redundant unit is capable of providing cooling requirements.
Discharge damper**	Fails closed, airflow is lost	One unit is out of service; redundant unit is capable of providing cooling requirements.
Emergency exhaust system isolation damper	Damper fails to open; exhaust airflow is lost	One system is out of service; redundant system is capable of providing required exhaust flow.
Isolation dampers for those non-safety-related HVAC systems which penetrate the auxiliary building boundary	Damper fails to close	Loss of isolation of one side of penetration; redundant damper closes.

* Applies only to that portion of the system located within the auxiliary building.

** Applies only to penetration room coolers and one component cooling water pump room cooler.

TABLE 9.4-10

DESIGN DATA FOR
TURBINE BUILDING VENTILATION SYSTEM COMPONENTS

I. Main Building Supply System

A. Operating Floor

1. Supply Units

Quantity	2
Air flow, cfm each	45,000
Static pressure, in. w.g.	1.4
Motor horsepower, hp each	40
Design standards	
Fan	MS
Motor	NEMA

2. Supply Units

Quantity	2
Air flow, cfm each	45,000
Static pressure, in. w.g.	1.53
Motor horsepower, hp each	40
Design standards	
Fan	MS
Motor	NEMA

3. Supply Unit

Quantity	1
Air flow, cfm	24,000
Static pressure, in. w.g.	1.96
Motor horsepower, hp each	20
Design standards	
Fan	MS
Motor	NEMA

B. Mezzanine Floor

1. Supply Units

Quantity	5
Air flow, cfm each	45,000
Static pressure, in. w.g.	1.4
Motor horsepower, hp each	40
Design standards	
Fan	MS
Motor	NEMA

TABLE 9.4-10 (Sheet 2)

2. Supply Units

Quantity	2
Air flow, cfm each	45,000
Static pressure, in. w.g.	1.53
Motor horsepower, hp each	40
Design standards	
Fan	MS
Motor	NEMA

3. Supply Unit

Quantity	1
Air flow, cfm	24,000
Static pressure, in. w.g.	1.96
Motor horsepower, hp each	20
Design standards	
Fan	MS
Motor	NEMA

C. Ground Floor

1. Supply Units

Quantity	3
Air flow, cfm each	45,000
Static pressure, in. w.g.	1.4
Motor horsepower, hp each	40
Design standards	
Fan	MS
Motor	NEMA

2. Supply Units

Quantity	2
Air flow, cfm each	45,000
Static pressure, in. w.g.	1.53
Motor horsepower, hp each	40
Design standards	
Fan	MS
Motor	NEMA

3. Supply Units

Quantity	1
Air flow, cfm	24,000

TABLE 9.4-10 (Sheet 3)

Static pressure, in. w.g.	1.4
Motor horsepower, hp	20
Design standards	
Fan	MS
Motor	NEMA

D. Communication Corridor

Quantity	1
Air flow, cfm	24,000
Static pressure, in. w.g.	1.86
Motor horsepower, hp	15
Design standards	
Fan	MS
Motor	NEMA

II. Main Building Exhaust System

A. Exhaust Fans (large)

Quantity	8
Air flow, cfm each	90,000
Static pressure, in. w.g.	1.74
Motor horsepower, hp each	50

B. Exhaust Fans (small)

Quantity	2
Air flow, cfm each	40,000
Static pressure, in. w.g.	1.08
Motor horsepower, hp each	10
Design standards	
Fan	MS
Motor	NEMA

C. Toilet Exhaust Fans

Quantity	2
Air flow, cfm each	500
Static pressure, in. w.g.	0.73
Motor horsepower, hp each	0.25
Design standards	
Fan	MS
Motor	NEMA

D. Elevator Machine Room Exhaust Fan

Quantity	1
Air flow, cfm	500

TABLE 9.4-10 (Sheet 4)

Static pressure, in. w.g.	0.27
Motor horsepower, hp	1/3
Design standards	
Fan	MS
Motor	NEMA

III. Turbine Building Unit Heaters

A. Operating Floor

Quantity	4
Heating capacity, Btu/hr each	330,000
Hot water flow rate, gpm each	17
Design standards	
Coil	MS
Motor	NEMA

B. Mezzanine Floor

Quantity	2
Heating capacity, Btu/hr each	220,000
Hot water flow rate, gpm each	11
Design standards	
Coil	MS
Motor	NEMA

C. Ground Floor

Quantity	4
Heating capacity, Btu/hr each	220,000
Hot water flow rate, gpm each	11
Design standards	
Coil	MS
Motor	NEMA

D. Stairwells

Quantity	8
Type	Electric
Heating capacity, kW each	7.5
Design standards	
Coil	MS
Motor	Manufacturer's Standard

E. Communication Corridor

1. Elevation 2073'-6"

Quantity	2
Heating capacity, Btu/hr each	120,000

TABLE 9.4-10 (Sheet 5)

Hot water flow rate, gpm each	6
Design standards	
Coil	MS
Motor	NEMA

2. Elevation 2,032

Quantity	2
Heating capacity, Btu/hr each	20,000
Hot water flow rate, gpm each	1
Design standards	
Coil	MS
Motor	NEMA

3. Elevation 2,000

Quantity	1
Heating capacity, Btu/hr each	60,000
Hot water flow rate, gpm	3
Design standards	
Coil	MS
Motor	NEMA

IV. Lube Oil Room Ventilation and Heating System

A. Supply System

Quantity	1
Air flow, cfm	2,000
Static pressure, in. w.g.	1.69
Motor horsepower, hp	1.5
Heating capacity, Btu/hr	220,000
Hot water flow, gpm	11
Design standards	
Fan	MS
Motor	NEMA

B. Exhaust System

Quantity	1
Air flow, cfm	2,000
Static pressure, in. w.g.	1.01
Motor horsepower, hp	1
Design standards	
Fan	MS
Motor	NEMA

TABLE 9.4-10 (Sheet 6)

V. Computer Room HVAC System

Quantity	2
Air flow, cfm each	6,000
Static pressure, in. w.g.	4.08
Motor horsepower, hp each	20
Total cooling capacity, Btu/hr each (total)	350,500
Chilled water flow rate, gpm each	15
Heating capacity, Btu/hr each	285,000
Hot water flow rate, gpm each	15
Design standards	
Fan	MS
Motor	NEMA
Coil	MS

VI. Instrument Shop HVAC System

A. Recirculation Unit

Quantity	1
Air flow, cfm	1,250
Static pressure, in. w.g.	1.90
Motor horsepower, hp each	1.5
Total cooling capacity, Btu/hr (total)	41,000
Chilled water flow rate, gpm	5
Design standards	
Fan	MS
Motor	NEMA
Coil	MS

B. Duct Heater

Quantity	1
Type	Electric
Air flow, cfm	100
Heating capacity, kW	2
Design standard	MS

VII. Condenser Air Removal Filtration System

Quantity	2
Air flow, cfm each	1,000
Static pressure, in. w.g.	10.0
Motor horsepower, hp each	3.0
Prefilters, No.	1
HEPA filters, No.	2

TABLE 9.4-10 (Sheet 7)

Charcoal, lbs	150
Design criterion	Reg. Guide 1.140
Seismic design	Non-Category I

VIII. Battery Room Chiller Water Coils

Quantity	2
Type	Chilled water
Air flow, cfm each	720
Total cooling capacity Btu/hr each	58,000
Water flow, gpm each	7
Design standard	MS

IX. EHC Cabinet Room Air-Conditioning System

Quantity	2
Type	Direct Expansion (DX)
Air flow, cfm each	3,200
Total cooling capacity, Btu/hr each	106,430
Static pressure, in w.g.	0.540
Motor horsepower, hp each	3.6
Design standards	
Fan	MS
Motor	NEMA

X. Oxygen control and pH control chemical Storage Room Air-Conditioning System

Quantity	1
Type	Room air conditioners
Air flow, cfm	675
Total cooling capacity, Btu/hr	32,500 (min)
Power input, kW	4.3 (max)
Design standards	MS

TABLE 9.4-11

DESIGN DATA FOR RADWASTE BUILDING HVAC SYSTEM COMPONENTS

I. The supply air system consists of a particulate filter, hot water heating coil, chilled water cooling coil, centrifugal fan, and electric motor driver.

Quantity	1
Air flow, cfm	10,800
Static pressure, in. w.g.	2.47
Motor horsepower	7.5
Cooling capacity, Btu/hr (total)	345,100
Heating capacity, Btu/hr	1,108,00
Chilled water flow rate, gpm	41
Hot water flow rate, gpm	55
Design standards	
Fan	MS
Motor	NEMA
Coil	MS

II. Unit heaters are used or provide supplemental heating.

A. Basement Floor

Quantity	1
Heating capacity, Btu/hr	140,000
Hot water flow rate, gpm	7
Type	Hot water
Design standards	
Coil	MS
Motor	NEMA

B. Ground Floor

Quantity	2
Heating capacity, Btu/hr each	78,600
Hot water flow rate, gpm each	4
Type	Hot water
Design standards	
Coil	MS
Motor	NEMA

C. El. 2,021

Quantity	2
Heating capacity, Btu/hr each	140,000
Hot water flow rate, gpm each	7
Type	Hot water

TABLE 9.4-11 (Sheet 2)

Design standards	
Coil	MS
Motor	NEMA

D. Second Floor

Quantity	4
Heating capacity, Btu/hr each	195,000
Hot water flow rate, gpm each	10
Type	Hot water
Quantity	1
Heating capacity, Btu/hr	100,000
Hot water flow rate, gpm	5
Type	Hot water
Design standards	
Coil	MS
Motor	NEMA

E. Drumming Area Unit Heaters

Quantity	3
Type	Electric
Heater rating, kW each	40
Design standards	MS

III. Local fan-coil units are used to provide supplemental cooling on the basement and ground floors. Each unit consists of a chilled water cooling coil, centrifugal fan, and electric motor driver.

Quantity	2
Air flow, cfm each	1,700
Static pressure, in. w.g.	3.0
Motor horsepower, each	2
Total cooling cap. Btu/hr each	90,000
Chilled water flow rate, gpm each	11
Design standards	
Fan	MS
Motor	NEMA
Coil	MS

IV. Fan-coil units are provided to supplement the cooling of the evaporator rooms. Each unit consists of a chilled water cooling coil, centrifugal fan, and electric motor driver.

A. Recycle Evaporator Room

Quantity	1
Air flow, cfm	3,200
Static pressure, in. w.g.	2.2

TABLE 9.4-11 (Sheet 3)

Motor horsepower	3
Total cooling cap., Btu/hr	169,000
Chilled water flow rate, gpm	20
Design standards	
Fan	MS
Motor	NEMA
Coil	MS

B. Waste Evaporator Room

Quantity	1
Air flow, cfm	3,200
Static pressure, in. w.g.	2.2
Motor horsepower	3
Total cooling cap., Btu/hr	169,000
Chilled water flow rate, gpm	20
Design standards	
Fan	MS
Motor	NEMA
Coil	MS

C. SLWS Evaporator Room

Quantity	1
Air flow, cfm	3,200
Static pressure, in. w.g.	2.2
Motor horsepower	3
Total cooling cap., Btu/hr	169,000
Chilled water flow rate, gpm	20
Design standards	
Fan	MS
Motor	NEMA
Coil	MS

V. Fan-coil units are used to provide the cooling of the control rooms and the sample laboratory. Each unit consists of a chilled water cooling coil, centrifugal fan, and electric motor driver. In addition, the main control room fan-coil unit is provided with a heating coil.

A. Control Room (Solidification)

Quantity	1
Air flow, cfm	500
Static pressure, in. w.g.	1.3
Motor horsepower	0.75
Total cooling, cap., Btu/hr	15,100
Chilled water flow rate, gpm	2.0

TABLE 9.4-11 (Sheet 4)

Design standards	
Fan	MS
Motor	NEMA
Coil	MS

B. Sample Laboratory

Quantity	1
Air flow, cfm	500
Static pressure, in. w.g.	1.3
Motor horsepower	0.75
Total cooling cap., Btu/hr	15,100
Chilled water flow, gpm	2.0
Design standards	
Fan	MS
Motor	NEMA
Coil	MS

C. Control Room

Quantity	1
Air flow, cfm	1,700
Static pressure, in. w.g.	2.5
Motor horsepower	1.5
Total cooling cap., Btu/hr (total)	42,100
Heating capacity, Btu/hr	40,400
Chilled water flow rate, gpm	5
Hot water flow rate, gpm	2.0
Design standards	
Fan	MS
Motor	NEMA
Coil	MS

VI. Transfer Fan

A fan is provided to transfer air from the radwaste building to the personnel access tunnel. The unit consists of a propeller fan and electric motor driver.

Quantity	1
Air flow, cfm	250
Static pressure, in. w.g.	0.81
Motor horsepower	0.25
Design standards	
Fan	MS
Motor	NEMA

VII. The radwaste building exhaust system consists of particulate filters and charcoal adsorption trains, centrifugal fans, and electric motor drivers.

TABLE 9.4-11 (Sheet 5)

A. Adsorber Train

Quantity	1
Particulate filters	9
HEPA filters	18
Charcoal, lbs	1800
Bed depth, in.	2
Type	Gasketless
Design criterion	Reg. Guide 1.140
Seismic design	Non-Category I

B. Fans

Quantity	2
Type	Centrifugal
Air flow, cfm each	12,000
Static pressure, in. w.g.	9.16
Motor horsepower, each	25
Design standards	
Fan	MS
Motor	NEMA

TABLE 9.4-12

DESIGN DATA FOR THE CONTAINMENT HVAC SYSTEM COMPONENTS

I. Containment Shutdown Purge Supply System

A. Supply Air Unit

Quantity	1
Air flow, cfm	20,000
Static pressure, in. w.g.	4.94
Motor horsepower, hp	25
Total cooling capacity, Btu/hr	2,680,000
Hot water flow, gpm	106
Design codes and standards	
Unit	MS
Motor	NEMA
Coils	MS
Seismic Design	Non-Category I

B. Containment Isolation Valves

Quantity	4
Type	Butterfly (wafer)
Material	Carbon steel
Actuation	Air cylinder
Failure mode	Closed
Size, in.	36
Design codes	ASME Section III, Class 2
Seismic design	Category I

C. Containment Penetration

Size, in.	36
Material	Carbon steel
Design codes	ASME Section III, Class E
Seismic design	Category I

II. Containment Minipurge Supply System

A. Supply Air Unit

Quantity	1
Air flow, cfm	4,000
Static pressure, in. w.g.	4.25
Motor horsepower, hp	5
Total heating capacity, Btu/hr	324,000
Hot water flow, gpm	17
Design codes and standards	
Unit	MS
Motor	NEMA
Coils	MS
Seismic design	Non-Category I

TABLE 9.4-12 (Sheet 2)

B. Containment Isolation Valves

Quantity Isolation Valves

Quantity	4
Type	Butterfly (wafer)
Material	Carbon steel
Actuation	Air cylinder
Failure mode	Closed
Size, in.	18
Design codes	ASME Section III, Class 2
Seismic design	Category I

III. Containment Purge Exhaust System

A. Exhaust Fans

1. Containment Shutdown Purge Exhaust Fan

Quantity	1
Air flow, cfm	20,000
Static pressure, in w.g.	13.3
Motor horsepower, hp	60
Design codes and standards	
Fan	MS
Motor	NEMA

2. Containment Minipurge Exhaust Fan

Quantity	1
Air flow, cfm	4,000
Static pressure, in. w.g.	5.0
Motor horsepower, hp	5
Design codes and standards	
Fan	MS
Motor	NEMA

B. Filter Adsorber Unit

Quantity	1
Particulate filters	20
HEPA filters	40
Charcoal, lbs	3,500
Bed depth, in.	2
Type	Gasketless
Design criterion	Reg. Guide 1.140
Seismic design	Non-Category I

TABLE 9.4-12 (Sheet 3)

C. Containment Isolation Valves

1. Containment Shutdown Purge

Quantity	2
Type	Butterfly (wafer)
Material	Carbon steel
Actuation	Air cylinder
Failure mode	Closed
Size in.	36
Design codes	ASME Section III, Class 2
Seismic design	Category I

2. Containment Minipurge

Quantity	2
Type	Butterfly (wafer)
Material	Carbon steel
Actuation	Air cylinder
Failure mode	Closed
Size in.	18
Design codes	ASME Section III, Class 2
Seismic design	Category I

D. Containment Penetration

Size, in.	36
Material	Carbon steel
Design codes	ASME Section III, Class 2
Seismic design	Category I

IV. Containment Atmospheric Control System Fans

Quantity	2
Fan type	Vaneaxial
Arrangement	4
Air flow, cfm each	10,000
Static pressure, in w.g.	7.27
Motor horsepower, hp	20
Design codes and standards	
Fan	MS
Motor	NEMA

V. Containment Atmospheric Control System Filter Units

Particulate filters, quantity each	8
HEPA filters, quantity each	16
Adsorbers, lbs of charcoal each	1,900

TABLE 9.4-12 (Sheet 4)

Bed depth, in.	2
Type	Gasketless
Design criterion	Reg. Guide 1.140
Seismic design	Non-Category I

VI. CRDM Cooling Fans

Quantity	3
Type	Vaneaxial
Air flow, cfm each	25,000
Static pressure, in. w.g.	3.9
Motor horsepower, hp each	3 @ 30 hp
Design codes and standards	
Fan	MS
Motor	NEMA

VII. Cavity Cooling Fans

Quantity	2
Type	Vaneaxial
Air flow, cfm each	16,000
Static pressure, in. w.g.	9.0
Motor horsepower, hp each	50
Design codes and standards	
Fan	MS
Motor	NEMA

VIII. Machine Room Exhaust Fan

Quantity	1
Type	Centrifugal
Air flow, cfm each	1,000
Static pressure, in. w.g.	0.1
Motor horsepower, hp each	0.5
Design codes and standards	
Fan	MS
Motor	NEMA

IX. Pressurizer Cooling Fan

Quantity	1
Type	Vaneaxial
Air flow, cfm each	2,400
Static pressure, in. w.g.	0.92
Motor horsepower, hp each	0.75
Design codes and standards	
Fan	MS
Motor	NEMA

TABLE 9.4-12 (Sheet 5)

X.	Ductwork	
	Material - inside secondary shield wall	Stainless steel
	Material - outside secondary shield wall	Galvanized steel

TABLE 9.4-13

COMPARISON OF CONTAINMENT MINIPURGE CONTAINMENT ISOLATION VALVES WITH BTP CSB 6-4

BTP Item No.	Minipurge isolation valve
B.1.a	Complies.
B.1.b	System employs two lines, one for the supply system and one for the exhaust system.
B.1.c	Minipurge containment isolation valve size is 18-inch-diameter butterfly valve. A minipurge flow rate of 4,000 cfm is required to maintain inplant containment doses, based on the assumptions and source terms of Regulatory Guide 1.112, at 7 MPC during occupation (see Section 11.3). At a flow rate of 4,000 cfm, 8-inch-diameter valves and system result in prohibitive velocities and pressure drops.
B.1.d	Complies.
B.1.e	Complies.
B.1.f	Complies.
B.1.g	Complies.
B.2	Complies.
B.3	Complies.
B.4	Complies.
B.5.a	Complies. (see Chapter 15.0)
B.5.b	The purge system has no safety-related fans, filters or ductwork beyond the isolation valves.
B.5.c	Complies. (see Section 6.2.1)
B.5.d.	Complies.

TABLE 9.4-14

DESIGN DATA FOR THE
DIESEL GENERATORS BUILDING VENTILATION SYSTEM
COMPONENTS

I. Diesel Generators Building Ventilation Supply Fans

Quantity	2
Type	Vaneaxial
Airflow, cfm each	120,000
Static pressure, in. w.g.	2.25
Motor horsepower, hp	100
Design codes and standards	
Fan	AMCA
Motor	IEEE-323
Seismic design	Category I

II. Diesel Generators Building Unit Heaters

A.

Quantity	4
Heating capacity, kW each	30
Type	Electric
Design standards	NEC, UL
Seismic design	Non-Category I

B.

Quantity	4
Heating capacity, kW each	40
Type	Electric
Design standards	NEC, UL
Seismic design	Non-Category I

TABLE 9.4-15

SINGLE-FAILURE ANALYSES - DIESEL GENERATOR BUILDING VENTILATION SYSTEM

Component	Malfunction	Consequences
Inlet damper	Fails to open; loss of air cooling	Loss of one system; redundant system is available for cooling the redundant diesel.
Recirculation damper	Fails to open during winter conditions; sub-freezing air being supplied into diesel generator room	Low-temperature cutouts on ventilation system isolate the fans.
Fans	Fails to start	Loss of one system; redundant system is available for cooling the redundant diesel.

TABLE 9.4-16

ESSENTIAL SERVICE WATER PUMPHOUSE
VENTILATION SYSTEM COMPONENTS

I.	Site Ambient Design Temperature	
	Summer	97 F
	Winter	7 F
II.	Supply Fans	
	Type	Vaneaxial
	Quantity, per room	1
	Air flow, cfm each	32,000
	Static pressure, in. w.g. each	1.85
	Motor horsepower, hp each	20.0
	Design Codes and Standards	
	Fan	MS
	Motor	IEEE-323
	Seismic Design	Category I
III.	Unit Heaters	
	Quantity, per room	1
	Heating capacity, kW each	25
	Type	Electric
	Quantity, per room	3
	Heating capacity, kW each	15
	Type	Electric
	Design Codes and Standards	MS
	Seismic Design	Non-Category I

TABLE 9.4-17

SINGLE-FAILURE ANALYSES - ESSENTIAL SERVICE WATER PUMPHOUSE VENTILATION SYSTEM

Component	Malfunction	Consequences
Inlet damper	Fails to open; loss of air cooling	Loss of one system; redundant system is available for cooling the redundant pump.
Discharge damper	Fails to open; loss of discharge air	Loss of one system; redundant system is available for cooling the redundant pump.
Fans	Fails to start	Loss of one system; redundant system is available for cooling the redundant pump.
Thermostats	Fails to operate	Loss of one system; redundant system is available for cooling the redundant pump.

TABLE 9.4-18

DESIGN DATA FOR PLANT HEATING SYSTEM COMPONENTS

I. Main Hot Water Pumps

Quantity	2
Type	Centrifugal
Capacity, gpm each	918
Head, ft of water, each	150
Motor horsepower, each	60
Casing material	Cast iron
Impeller material	Bronze
Design standards	
Pump	MS
Motor	NEMA

II. Secondary Loop Hot Water Pumps

Quantity	8
Type	In line
Hot water flow rate, gpm	11-130*
Head, ft of water	12-15*
Motor horsepower	0.25-1*
Casing material	Cast iron
Impeller material	Bronze
Design standard	MS

III. Heat Exchanger

Hot water temperature in, F	158
Hot water temperature out, F	198
Inlet steam pressure, psig	25
Steam temperature in, F	267
Condensate temperature out, F	212
Steam flow rate, lb/hr	19,660
Design pressure, psig	
Tube side	150
Shell side	150
Tube material	Carbon steel, SA-285 SB-111
Shell material	Carbon steel, SA-285
Fouling factor	0.0014
Design code	ASME Section VIII

*Indicates range for eight pumps.

TABLE 9.4-18 (Sheet 2)

IV. Hot Water Expansion Tank

Quantity	1
Capacity, gal.	400
Operating pressure, psig	30
Design pressure, psig	125
Material	Carbon steel Shell: SA-414G Heads: SA-414F
Design Code	ASME Section VIII

TABLE 9.4-19

DESIGN DATA FOR CENTRAL CHILLED WATER SYSTEM COMPONENTS

I. Chilled Water Pumps

Quantity	2
Type	Centrifugal
Motor horsepower, each	75
Capacity, gpm, each	720
Head, ft each	227
Casing material	Cast iron
Impeller material	Bronze
Design standards	
Pump	MS
Motor	NEMA

II. Central Chillers

Quantity	2
Type	Centrifugal
Capacity, tons, each	540
Refrigerant	R12
Design code	ASME Section VIII

A. Condenser

Design pressure, psig	
Tube side	200
Shell side	225
Entering water	
Temperature, F	90
Condenser water flow, gpm	1,350
Fouling factor	
(service water)	0.002
Tube material	90/10 copper-nickel
Shell material	Carbon steel

B. Compressor

kW, input	691
Type	Centrifugal, hermetic

C. Evaporator

Design pressure, psig	
Tube side	150
Shell side	185
Chilled water entering	
temperature, F	62

TABLE 9.4-19 (Sheet 2)

Chilled water leaving temperature, F	44
Chilled water flow, gpm	720
Fouling factor (chilled water)	0.0005
Tube material	Copper
Shell material	Carbon steel

III. Chilled Water Expansion Tank

Quantity	1
Design pressure, psig	50
Operating pressure, psig	35
Design capacity, gal	315
Material	Carbon steel
Design code	ASME Section VIII

9.5 OTHER AUXILIARY SYSTEMS

9.5.1 FIRE PROTECTION SYSTEM

Fire protection is provided in accordance with the requirements of 10 CFR 50, Appendix A, GDC-3.

The fire protection system (FPS) is designed to detect fires, protect the plant against damage from fire, minimize hazards to personnel, and reduce property loss due to fire.

Appendix 9.5B provides an evaluation of the effects of postulated fires within the plant, to ensure the integrity of the reactor coolant system boundary, enable the plant to be placed in a safe condition, and minimize the release of radioactivity.

9.5.1.1 Design Bases

9.5.1.1.1 Safety Design Bases

Safety-related structures, systems, and components are designed and located to minimize the fire hazard consistent with other safety requirements. Noncombustible and heat resistant materials are used wherever practical throughout the unit to minimize the fire intensity in any fire area. This requirement is in compliance with 10 CFR 50, Appendix A, General Design Criterion 3, Fire Protection.

The basic fire protection for safety-related items is achieved by fire inception avoidance and through remote separation of systems serving the same safety function or by fire barriers between such installations.

Therefore, except for an associated containment penetration, the FPS is not a safety-related system.

SAFETY DESIGN BASIS ONE - The containment isolation valves in the FPS are selected, tested, and located in accordance with the requirements of 10 CFR 50, Appendix A, General Design Criteria 54 and 56 and 10 CFR 50, Appendix J, Type C testing.

9.5.1.1.2 Power Generation Design Bases

POWER GENERATION DESIGN BASIS ONE - The fire protection system is designed to minimize the effects of fires. It is designed to provide the capability to extinguish fires encountered in all plant areas. Areas which are protected by means of manual fire protection are accessible with respect to heat, smoke, toxic combustion products, and radiation.

POWER GENERATION DESIGN BASIS TWO - The plant fire protection water supply system is capable of supplying rated flow with the largest pump out of service. The fire protection water supply system is rated to supply simultaneously the maximum design flow for any sprinkler or water spray system and 500 gpm for fire hoses, assuming the shortest fire main flow path is valved out of service.

POWER GENERATION DESIGN BASIS THREE - The fire protection water supply yard main is arranged so that each branch line from the main may be supplied with water from the pumps by alternate flow paths. Two-way hydrants with hose houses are installed at about 250-foot intervals along the main.

POWER GENERATION DESIGN BASIS FOUR - Fixed water suppression systems are installed as required in areas with a high fire or loss potential. Criteria for determining the need for these systems is in substantial compliance with the American Nuclear Insurers (ANI) "Basic Fire Protection for Nuclear Power Plants" (March 1976).

POWER GENERATION DESIGN BASIS FIVE - Halon 1301 flooding systems are provided in the control room cable trenches and chases, switchgear rooms, ESF switch gear rooms, MG sets room, and cable penetrations rooms.

POWER GENERATION DESIGN BASIS SIX - Standpipe connections and hose stations are provided in areas adjacent to and within stair towers and other points not greater than 100 feet apart in all normally accessible areas.

POWER GENERATION DESIGN BASIS SEVEN - Portable fire extinguishers are provided throughout normally accessible areas of the plant in accordance with applicable NFPA, OSHA, and ANI regulations and recommendations.

POWER GENERATION DESIGN BASIS EIGHT - Alarms are provided in the control room and signal upon activation of the automatic fire protection systems. Fire and smoke monitoring and detection systems are installed as required where a potential for fire exists. These systems alarm in the control room and, if personnel can be in the vicinity, locally.

9.5.1.2 System Description

9.5.1.2.1 General Description

The powerblock fire suppression systems are shown schematically in Figure 9.5.1-1. The fire area boundaries are indicated in Figure 9.5.1-2.

A comparison of the powerblock design with Regulatory Guide 1.120 is presented in Appendix 9.5A. The powerblock fire protection system is comprised of diversified monitoring, detection, alarm, and suppression facilities particularly selected to protect the area or equipment from damage by fire and includes the following major features:

a. Suppression systems/capabilities

b. Fire and smoke detection and alarm system

c. Fire barriers

d. Smoke and heat isolation and ventilation

e. Other fire protection features

The capability of the fire detection and extinguishing systems provided for each area associated with safe shutdown structures, systems, and components is evaluated in Appendix 9.5B.

The essential service water pumphouse and the yard area around the refueling water storage tank are the only site-specific, safety-related areas which contain combustible materials or are exposed to other fire hazards in their immediate vicinity. Appendix 9.5B-8 gives a detailed analysis of fire control in these areas.

The site Fire Protection System (FPS) may be viewed as two subsystems, the suppression system and the detection/alarm system. Each subsystem has numerous components; the following describes major components of each system.

Where required, portions of the fire protection system that pass through areas containing safety-related equipment are seismically analyzed and supported to prevent damage to this equipment. The system is designed to preclude adverse flooding of safety-related equipment under seismic conditions, as discussed in Section 3.6.

Adequate drainage is provided to prevent accumulation from suppression system discharge from causing water damage to components required for safe shutdown of the plant.

Accessibility is provided for the safety-related equipment areas which rely on manual fire protection.

Site-related buildings have relatively low heights thus eliminating the potential of fire and smoke spreading by the stack

effect. Air locks are provided at building entrance doors, wherever possible, to minimize the effect of winds on air flow patterns inside each building. Egress is provided from normally manned areas by clearly marked fire exits and passageways.

Egress is provided through the power block in accordance with 29 CFR 1910, Subpart E, "Means of Egress."

Appendix 9.5B presents an area-by-area analysis of the powerblock fire loading and the associated fire detection and suppression systems. In the unlikely event that the fire cannot be extinguished, fire barriers or physical separation of redundant components will prevent the fire from causing the failure of redundant components and systems required for safe shutdown. For redundant systems which cannot physically be located in separate fire areas, protection is provided by separation distance and a combination of fire resistive wraps and fire detection and suppression systems.

Noncombustible construction is employed throughout all the buildings to minimize fire potential. Employment of heat- and flame-resistant materials of construction and fire resistant coatings reduces the potential for fire, particularly in areas which contain or may interact with safety-related equipment or rely solely on manual fire protection. Figure 9.5.1-2 shows the applicable areas of the plant.

Heat and smoke are vented by the normal ventilation exhaust systems in the auxiliary, radwaste, fuel, diesel, and control buildings, and the auxiliary boiler room. Heat and smoke are vented by the automatic actuation of heat and smoke vents in the turbine building. All flammable gases used at WCGS are stored outside safety-related areas so that a fire involving these gases cannot cause the failure of any safety-related equipment, as discussed in Section 9.3.5. An exception to this is hydrogen/nitrogen test gas cylinders associated with the hydrogen analyzers. This test gas is less than 10% hydrogen and any leakage would quickly dissipate below the 4% lower explosive limit (LEL) for hydrogen in air.

Thermal antisweat insulation with appropriate Underwriters' Laboratories ratings of 25 or less for flame spread is provided for powerblock piping which is located in safety-related areas.

The powerblock fire suppression systems are designed so that in the event of the failure of the primary suppression system in a given area, a backup suppression system is available. In areas so protected, the primary suppression system is a fixed water or gas-type system with secondary protection from portable extinguishers and hose stations. In areas of low fire loading, the primary method of fire extinguishment is by portable extinguishers with secondary protection from hose stations. All hose stations are

located so that if a fire occurs at a hose station, preventing access to the hose, the fire may be extinguished by the hose stream from an adjacent hose station.

The powerblock FPS components in safety-related equipment areas utilize proven components and have been selected to minimize the risks of inadvertent operation. Drip-proof safety-related pump motors and electrical equipment are used, when feasible, to minimize the possibility of damage should fire fighting operations be required. Wet-pipe sprinkler systems are not used in electric motor-driven safety-related pump rooms and electrical equipment rooms. Extinguishing materials used in the FPS are compatible with the equipment in the areas served to avoid damage to the equipment in the event of a break in the system. Adequate drainage is provided in the areas where sprinkler or waterspray systems are used.

The basic fire protection for a safety-related area is achieved through separation or by fire barriers. The fire protection system, designed to detect, control, and extinguish any fire rapidly and effectively, is not a safety-related system and is, therefore, a nonseismic Category I system. The design requirements of the FPS are based on the American Nuclear Insurers (ANI) Guide "Basic Fire Protection for Nuclear Power Plants". Based on the recommendations of this guide, the FPS includes two 100 percent capacity fire pumps (one electric motor driven, one diesel engine driven) and two motor driven jockey pumps. One jockey pump serves as a backup for the operating jockey pump.

The codes and standards considered in the design of the fire protection system are listed in Table 9.5.1-1.

The fire protection system is designed so that an inadvertent actuation will not prevent a safe shutdown of the plant. In most cases, where fixed water suppression systems are required for safety-related equipment, preaction systems are provided. The preaction system is provided with closed-head nozzles and is pressurized with air. Inadvertent opening of a sprinkler head will result in a loss of air pressure, which is alarmed in the control room. Opening of the deluge valve is alarmed in the control room. Inadvertent opening of the deluge valve does not affect the integrity of the safety-related equipment, since the fire suppression system remains intact with the closed heads.

Standpipes which service safety-related equipment are located outside the boundary of the equipment room, where possible, so

that an inadvertent pipe failure does not create a flooding condition in the vicinity of the safety-related equipment. Manual valves are provided to isolate the failed standpipe. The safety-related equipment located in the basement of the auxiliary building is enclosed by watertight doors and walls to prevent a flooding condition within the equipment room. Standpipes in the control building are routed in the stairwells, where possible, to preclude pipe failures, creating a flooding condition in the vicinity of the safety-related equipment. Floor drains have been provided throughout the control building to preclude flooding at any elevation due to a failure or if water is required to extinguish a fire.

Fire detection circuits are continuously supervised for circuit continuity, and open circuit failure is annunciated by the circuits' supervisory alarm.

The FPS supply piping to the containment was designed to protect the system from a single active failure. The inside containment isolation valve is a check valve which is highly reliable by design and considered to be exempt from active failure due to the absence of any external electrical or control signals which may be disabled from a fire inside the containment. Refer to Section 3.1.1 for a discussion of the single failure criteria. A fire inside the containment does not disable the operability or impair the access to the outside isolation valves, which may be operated manually, either remotely or locally.

9.5.1.2.2 Component Description

Codes and standards applicable to the fire protection system are listed in Table 3.2-1 and Table 9.5.1-1. The powerblock fire protection system is designed in accordance with applicable sections of Title 29, Chapter XVIII, Part 1910 (Occupational Safety and Health Standards) of the Code of Federal Regulations. It is designed in substantial compliance with the requirements of the American Nuclear Insurers (ANI) and the National Fire Codes of the National Fire Protection Association (NFPA).

9.5.1.2.2.1 Suppression Systems/Capabilities

FIRE PROTECTION WATER SUPPLIES, YARD MAINS, AND HYDRANTS - Water supply for the permanent fire protection installation is based on the maximum automatic sprinkler or fixed water spray system demand with the simultaneous flow of 500 gpm.

The WCGS cooling lake provides water for the FPS. The FPS does not take water from the ultimate heat sink except for the hose stations in the Essential Service Water (ESW) pumphouse when the ESW system is operating (see Section 9.5B.8). The circulating water screenhouse serves as the intake point and provides physical protection for the fire pumps and controllers. Figure 10.4-1, sheet 5, shows the location of the fire protection equipment within the circulating water screenhouse.

The major components of the water supplied fire protection system are: two fire pumps (one electric motor driven, the other diesel engine driven), two jockey pumps (one primary and one backup)for system pressure maintenance, distribution mains, fire hydrants with hose houses, standpipes and sprinklers. Figure 9.5-1 provides details concerning system components and operations. Figure 9.5-2 shows a site-layout plan for the FPS.

Each pump is equipped with a control panel for manual or automatic operation. The jockey pump maintains pressure in the system at all times when the fire pumps are not in operation. The pumping capacity of the FPS is maintained under conditions of failure of one fire pump. Additional water may be added to the FPS by way of fire department connections at the circulating water screenhouse or at any yard hydrant. This additional water could be supplied by fire department pumpers by taking draft from the WCGS cooling lake by temporary means. The test header for performance testing the fire pumps is connected to the fire protection system by a normally closed valve. The test header is located east of the circulating water screenhouse.

To minimize water hammer/pressure surge concerns from fire pump starts, a surge tank has been installed on the fire pumps common discharge header.

The fire distribution main is looped around the power block area and provides water to all water supplied fire protection systems with the exception of the hose stations at the ESW screenhouse. (Refer to Figure 9.5-3 and E-1F9905 for ESW Fire Protection details).

Isolation valves are provided throughout the system in order to maintain maximum coverage even when portions of the system must be shut down for emergency repair or routine maintenance. All system control valves designated ZA, i.e., position alarmed, in Figure 9.5-1 are equipped with limit switches and indicating lights in the main control room to indicate if the valve is fully open.

Fire hydrants are located along the distribution main. In the power block loop the maximum distance between hydrants is 250 feet. Each hydrant is located within a hose house equipped per NFPA 24. Hydrants are also equipped with curb box shut off valves.

AUTOMATIC WET-PIPE SPRINKLER SYSTEMS - Automatic wet-pipe sprinklers are provided based on NFPA Nos. 13-1975 or 1976 or 1991 to protect the area and equipment shown on Table 9.5.1-2. Each system consists of a network of piping which distributes water to closed head sprinklers or spray nozzles. The wet-pipe systems for the cable chases and the cable area above the access control area have pendant type spray nozzles with fusible link closure.

The powerblock wet-pipe system for the vertical cable chases in the auxiliary and control buildings is equipped with closed head spray nozzles. Systems are provided with an alarm check valve equipped to alarm locally and in the control room when a leakage or flow greater than 10 gpm occurs. The alarm check valve trim includes a spring-loaded auxiliary valve, a restriction orifice, and a self-draining retarding chamber in the alarm line to prevent false alarms.

The auxiliary feedwater pipe chase area automatic wet-pipe system is equipped with upright style fusible link sprinklers. This system is provided with a flow alarm device in combination with a gate valve in the main supply header. The flow through the piping is annunciated locally and in the control room. This valve is normally locked open and can be used to isolate the piping network for maintenance purposes.

The sprinkler system in the access control area covers all associated rooms with the exception of the toilet and shower areas, based on their low fire loadings.

Wet standpipe hose stations are spaced at approximately 100 foot intervals throughout the administration building, shop building, warehouse, Radwaste Storage Building, Essential Service Water pumphouse, Security Building(s), and Technical Support Center. Each hose station is equipped with a shut off valve, a minimum of 50 feet of hose and a variable fog nozzle.

Wet pipe sprinkler systems are provided in the diesel fire pump room in the circulating water screenhouse, throughout the main warehouse, and in designated fire hazard areas of the shop building, Security Building(s), Security diesel-generator building, Radwaste Storage Building and Technical Support Center, and Support Building West. Each system is provided with an isolation valve and flow alarm check valve. Each of the sprinkler systems is automatically initiated by fusible sprinkler heads located in the hazard area. Operation of any wet pipe sprinkler system simultaneously sounds an alarm near the fire hazard area and in the main control room.

AUTOMATIC WATER SPRAY SYSTEM - Automatic water spray systems for the powerblock, hydraulically designed based on NFPA No. 15-1973, are provided to protect the equipment as shown on Table 9.5.1-2. Each system utilizes directional solid-cone nozzles and provides a spray density of 0.25-0.30 gpm

per square foot. Automatic systems are provided with diaphragm-type deluge valves. The valve trim consists of ball check valve, main and auxiliary drains, ball drip valve, drip funnel and support, pressure gauges to indicate pressure below diaphragm, and a manual pull control station. Piping downstream of the deluge valves is galvanized.

The deluge valves are tripped by solenoid valves. Pressure switches are provided on the alarm lines from the deluge valves to alarm in the control room on the establishment of a water flow. It is possible to periodically test the alarm line circuit without tripping the deluge valve. Each automatic spray system has a local control panel that performs the following functions:

a. On detection, transmits a fire alarm to the control room and to local bell.

b. Initiates operation of the deluge valve.

c. Transmits water flow alarm to the control room.

d. Supervises deluge valve actuation device circuits and transmits a trouble alarm to the control room in the event of a malfunction or power failure.

Failure of the detection system does not trip the deluge valve but does register a trouble alarm in the control room.

MANUAL WATER SPRAY SYSTEM - Manual water spray systems for the powerblock, (with the exception of the ESW Vertical Loop Chase) are hydraulically designed based on NFPA No. 15-1973, are provided to protect the equipment, as shown on Table 9.5.1-2. Each system utilizes directional solid-cone nozzles and provides a spray density of 0.25-0.30 gpm per square foot. Manually actuated systems are provided with normally closed outside screw and yoke (OS&Y) isolation (gate) valves with limit switches to indicate the position of the valves in the control room. Refer to Fire and Smoke Detection Alarm Systems of this section (9.5.1.2.2) for further description of valve supervision. The charcoal adsorbers are equipped with water spray piping with a quick connect/disconnect coupling. Hose from the nearest hose station can be connected through the quick connect/disconnect coupling to supply water to the spray piping. The ESW Vertical Loop Chase is provided with a dry standpipe connection that feeds open head spray nozzles below the chase roof. Fire water is provided to the system by connecting the standpipe to an alternate water source (hydrant, etc.) with a fire hose. The system is hydraulically designed considering NFPA 15-2012.

AUTOMATIC PREACTION SPRINKLER SYSTEM - Automatic preaction sprinklers for the powerblock are provided based on NFPA Nos. 13-1975 or 1976 to protect the areas and equipment as shown on Table 9.5.1-2. Each preaction system includes a deluge valve, a check valve, and a network of distribution piping with closed head sprinklers or spray nozzles. All areas served by the preaction

systems have upright or pendant heads with a fusible link closure. The piping downstream of the deluge valve is galvanized and is normally dry and pressurized to approximately 20 psig with air. Service air is used, and necessary pressure regulators are provided. A pressure switch is installed to alarm in the control room on loss of air pressure (indicating either a breakage or fusing of sprinkler heads) or high pressure (indicating a malfunction of air supply control).

Refer to the automatic water spray system described above for a description of the deluge valve and related trim and the local control panel.

MANUAL PREACTION SPRINKLER SYSTEM - Manual preaction sprinklers for the powerblock are provided based on NFPA No. 13-1976 to protect the areas and equipment, as shown on Table 9.5.1-2. Manual preaction sprinkler systems are similar to the automatic preaction sprinklers, with the following exceptions:

a. The system is not pressurized. Therefore, a check valve, air pressure regulators, and air pressure switch are not provided.

b. Since the actuation is manual, there are no automatic release devices. Therefore, local water flow alarms are not provided.

c. The Containment Fire Protection is normally maintained in a "DRY" condition. The entire system is charged by local and remote manual actuation of the isolation valves. Under normal operating conditions, the deluge valves inside of the containment are maintained in a tripped (or open) condition by placing the manual release valve for each system into the OPEN position. This action prevents the deluge valve from being held closed.

The powerblock system is designed to provide 0.30 gpm per square foot of floor area for the most remote 1,000 square feet. The system utilizes pendant-type spray nozzles with fusible link closures.

The fuel oil storage tank is provided with a dry-pipe mechanical type foam extinguishing system. The foam extinguishing system is manually activated by opening of the water supply isolation valve located in the fuel oil pumphouse. A manual hose station with foam generating capability is located on the outside wall of the fuel oil pumphouse.

STANDPIPES AND HOSE RACKS - Wet standpipes for fire hoses are designed based on the requirements for Class II service of NFPA No. 14-1976.

Except in the containment, hose racks are supplied water from wet standpipes located throughout the plant. Hose racks are provided for use by the plant personnel and are located adjacent to stairways and at interior columns so that no more 100 feet separates adjacent hose racks. Since the fire hazard analysis must consider fires by transient combustibles, any hose station in the plant may be blocked by fire. However, a fire at any hose station may be reached and extinguished by water from an adjacent hose station. In containment, an additional length of hose can be added, if required.

The standpipes inside the containment are normally dry. Hand pull stations are provided adjacent to each hose station. Actuation of any station registers an alarm in the control room. Plant operations and firebrigade personnel locally and remotely open the isolation valves and charge the standpipes. Hose racks located inside the containment are spaced no more than 100 feet from an adjacent hose rack. Additional hose racks are provided in the truck bay of the radwaste building to obviate the need for sprinklers or fire barriers in this area. Coverage by interior hose racks is provided for every accessible area of the power block and the ESW pumphouse.

Four-inch standpipes are provided for multiple hose stations, and 2-1/2-inch standpipes are provided for single hose stations. Each standpipe hose station is equipped with a pressure-reducing 1-1/2-inch angle hose valve with the hose rack assembly for use by the plant personnel and, except for inside the containment, a 2-1/2-inch hose valve suitable for connection to a fire department hose. The fire department hose connections are spaced throughout the plant so that no more than 130 feet separates two adjacent hose valves.

Each hose rack is provided with 75 feet of 1-1/2-inch hose and adjustable nozzle, with the exception of the diesel generator rooms, cable spreading rooms, and the north end of Corridor No. 2, room 1408, of the Aux Building, elevation 2026, which are protected by hose racks having 100 feet of hose.

Isolation valves for main supply headers and water suppression systems have supervisory switches. Isolation valves in the standpipes are locked open. Pressure indicators are provided at the top of the most remotely located standpipes in the plant.

The hose stations and standpipes provided for the WCGS are in accordance with the requirements of BTP 9.5-1, Appendix A for plants which received a construction permit before July 1, 1976 which does not require a Seismic Category I water system. It should be noted that portions of the fire water supply piping have been seismically designed to the requirements of Regulatory Position C.2 of Regulatory Guide 1.29 where their failure could affect safety-related equipment.

Vacuum breakers have been installed on standpipe risers to mitigate the potential vacuum effect of standpipe voiding as a result of a system flow demand.

PORTABLE FIRE EXTINGUISHERS - Portable fire extinguishers for manual extinguishment of fires are provided throughout normally accessible areas of the plant, based on NFPA No. 10-1975 and OSHA regulations.

Where possible, the hand extinguishers are located conveniently and ready for immediate use. Carbon dioxide, pressurized water, water mist, and potassium bicarbonate-(dry chemical) type portable extinguishers are provided as appropriate for the class of combustible and the type of equipment located in the hazard area. Figure 9.5.1-2 shows the approximate location and type of fire extinguishers installed in the power block buildings.

Carbon dioxide extinguishers are 20-pound capacity with a minimum UL rating of 10 B:C. Dry chemical extinguishers (Purple K) are at least 20-pound capacity with a minimum UL rating of 80 B:C. The capacity of the pressurized water extinguishers is 2-1/2 gallons each, with a UL rating of 2-A. The water mist extinguishers have a capacity of 2 or 2 ½ gallons and a UL rating of 2-A:C. In addition, a wheeled dry chemical extinguisher(s) (Purple K) is provided for the turbine building. Multipurpose dry chemical fire extinguisher protection is provided for the Station Blackout Diesel Generator Building and the Essential Service Water Vertical Loop Chase.

Self-contained breathing apparatus and protective clothing is available in the plant to permit access to hazard areas during and after a fire.

HALON 1301 SYSTEM - Halon 1301 fire suppression systems for the powerblock are designed based on NFPA No. 12A-1973 and are provided locally to protect the areas shown in Table 9.5.1-2. The systems are total flooding type and are designed to maintain a minimum 5-percent concentration at the height of the highest

combustible in the room for 10 minutes. The 5-percent concentration time may be less than 10 minutes for the upper section of the vertical control room chase. The Halon 1301 storage cylinders are mounted on racks located outside the hazard areas. A 100-percent reserve bank is provided for each bank of cylinders. The one piece extruded storage cylinders are charged to 600 psig and are designed to meet the requirements of the U.S. Department of Transportation. Each cylinder has a control head (normally closed) which is opened by applying pilot pressure from the pilot cylinder and a pressure indicator. All manifold and distribution piping is galvanized. A local control panel is provided with each system to perform the following functions:

a. Sound a local alarm horn and initiate Halon discharge on second level of detection.

b. Transmit discharge alarm to the control room.

c. Close selected ventilation dampers and shut off associated ventilation and/or air conditioning fan motors.

d. Supervise and transmit a trouble alarm to the control room on power failure.

Check valves are provided to prevent the loss of Halon if any cylinder is disconnected. Bleeder valves are provided to prevent accidental reserve bank discharge after the main bank has operated. Where one bank serves more than one area, solenoid-operated selector valves are installed.

Halon 1301 total flooding protection is provided for the QA records vault in the administration building. The Halon system is actuated automatically by cross zoned ionization detectors or by a manual pull station located in or near the hazard area. Actuation of the Halon system will energize an audible and visual alarm near the hazard and in the main control room and automatically seals off HVAC ducts into and out of the respective Halon protected area to contain the Halon. Upon actuation of the system, the Halon discharge substantially completes within ten seconds, filling the protected space with a five to seven percent concentration of Halon 1301. Manual HVAC controls are provided to purge the QA records vault in the administration building of Halon after a discharge. Other Halon protected areas utilize the normal HVAC system and/or portable blowers to purge the protected space of Halon.

Electronic supervision of the Halon equipment is maintained both locally and in the control room for annunciation of normal, trouble and alarm status.

9.5.1.2.2.2 Fire and Smoke Detection and Alarm System

Automatic fire and smoke detection systems are provided, as indicated in Appendix 9.5B, based on NFPA Numbers 72D-1975 (Class A) and 72E-1978.

The fire detection and alarm system is divided into convenient zones. There are provisions for at least 259 zones made up as follows:

		No. of zones
a.	Power block and the ESW pumphouse and spares	210
b.	Site related	49

Site-related fire detection devices are provided in the administration building, shop building, electrical room of the circulating water screenhouse, ESW pumphouse, Security Building(s), Technical Support Center, Support Building West and in the fuel oil pumphouse with the fire detection devices within each building grouped into zones. Activation of a fire detection device is alarmed in the main control room and locally. Each building except the ESW pumphouse contains an annunicator panel to indicate the zone within that building which initiated the alarm.

Fire detection for the main warehouse and radwaste storage building is accomplished by indirect means through the monitoring of flow and/or pressure indicating switches for the associated fire protection water sprinkler systems.

There are four alarm control units (ACU), one of which is site related associated with the fire detection and alarm system. The ACU is of a solid state modular construction. Each ACU has: one Central Processor Unit, wired initiating device circuits as required to monitor remote dry contact type devices, (i.e., "Yard Loop Isolation Valves", "Fuel Building Shutoff Valves", etc.), addressable initiating device circuits as needed to monitor smoke and/or heat sensors and hand pull stations, notification appliance circuits to operate existing area alarm horns, bells, etc., auxiliary relay control modules for operation of miscellaneous functions, a network interface board which interfaces each ACU together as a node within the network, and several power supplies. Each ACU is supplied 120 V AC, and reduces/converts the voltage internally to a nominal 24 V DC.

Due to the contact arrangement of the ACU Inverter, the "Primary" power for each ACU is the non-Class 1E 125 V DC system, and the "Secondary" power for each ACU is the non-Class 1E instrument ac system. A switch on the ACU Inverter labels either the AC Input as "Primary" or the DC Input as "Primary". The DC Input has been labeled as "Primary " in order to receive a notification of switch-over from primary power to secondary power. The Inverter will continue to supply power to the load if the AC power is lost, and if the DC power is lost the inverters static transfer switch disconnects the Inverter and connects the AC line directly to the load.

The non-Class 1E 125 V DC system is supplied through batteries and battery chargers. The battery chargers are sized to carry the total connected load indefinitely. The battery chargers are normally fed from the Class 1E emergency power system. Upon failure of a battery charger, each separation group battery can carry the total connected load for 2 hours. Additional load carrying time can be obtained by selective load shedding and/or closing the bus tie switches between the separation group buses.

The non-Class 1E instrument AC system is continuously supplied by the Class 1E ac emergency power system. The preferred and normal source of the Class 1E power system is the offsite power system. Two physically independent sources of offsite power are fed to the onsite power system. Secondary power is provided by the station emergency diesel generator to each 4.16kV bus. The arrangement, fuel supply, etc., of the WCGS station diesel exceed the minimum requirements of NFPA 72D.

The primary power for the remote fire protection panels is provided by the non-Class 1E 125 V dc system. Each ACU is utilized as power distribution panels for the remote panels. The non-Class 1E 125 V dc system is continuously supplied by the 480 V 1E bus via the battery chargers. Two physically independent offsite power sources provide the normal and preferred source to this system.

The standby power source for the secondary supply to the local panels is provided by the station emergency diesel generator. The arrangement, fuel supply, etc., of the station diesel exceeds the minimum requirements of NFPA 72D.

The non-Class 1E 125 V dc system is supplied through batteries and battery chargers. The battery chargers are sized to carry the total connected load indefinitely. The battery chargers are fed from the Class 1E emergency power system.

In the event of a battery charger failure, each battery can carry the dc loads for approximately 6 hours. This assumes that ac sources are still available for other non-1E loads. This exceeds the 4-hour requirement of NFPA 72D.

Cables to remote fire protection panels are routed in conduit and supervised for integrity. Loss of power to these panels is immediately alarmed in the control room on the fire protection annunciator.

The ACU powers and supervises all detectors, except those for extinguishing system actuation in the following areas:

a. Turbine building, including the transformers

b. Fuel building railroad bay

c. Diesel generator rooms

The detection systems in these areas actuate the automatic suppression systems installed in the above areas directly, and are powered by local control panels. The ACU supplies the power to these panels.

For area detection and alarm systems and for detection for actuation of extinguishing systems in areas not listed above, the signal is received by the ACU. Alarm and control functions are then initiated by the ACU with the appropriate annunciation in the control room. For valve supervision, extinguishing system discharge, and all other alarm and trouble signals generated by the local extinguishing system control panels, the signals feed through the ACU multiplexer to the control room panel.

The four ACU units are connected to the Network Display Unit and the Color Graphics Control Unit located in the fire protection control panel in the control room. The wiring between each node of the system consists of two data loops. The primary node constantly monitors the system for alarm and circuit information, and displays this information on the fire protection control panel.

The fire protection control panel houses the network display unit, color graphics touch screen, terminal board, primary CPU, site-related fire pump controls, and an Inverter for power. The touch screen color graphic unit, mounted in KC008, will provide pictorial layouts of monitored areas of the facility with identifying icons for each type initiating device. These icons will be highlighted when in an alarm or trouble condition and the operator can acknowledge and reset the alarms from this central control unit. The central control Network Display Unit (NDU), also mounted within KC008, will log events in a historic log and will display the current network status on an LCD readout.

There is another unit similar to the control room fire protection panel, located in the Walter P. Chrysler Building Instrumentation and Controls Shop. This unit is capable of monitoring the fire detection system as the KC008 Panel is. This unit is used for testing and troubleshooting of the fire alarm circuits. No acknowledging or resetting of alarms will occur at this unit except during test mode.

The fire alarm system meets the requirements for Class A systems per NFPA 72D-1975 paragraph 1321 as detailed below and the requirements for Class 1 circuits as stated in the National Electrical Code - 1978, Article 725-11. Each signaling line circuit between the multiplexers and the fire protection control panel in the main control room is capable of operating for its intended signaling services during a single break or a single ground fault condition in the circuit. All initiating device circuits are continuously supervised and provide a trouble alarm in the event of a break in the circuit. Additionally, initiating device circuits (detectors) serving pre-action suppression systems for safety-related areas are capable of operating during a single break or a single ground fault condition. The initiating device circuits for remote alarm pressure switches are designed in accordance with NFPA 72D-1975, paragraph 1322 or 1323.

Supervision of the fire protection panel is not the primary function of the plant operator assigned to monitoring the panel. Since there will be few and infrequent signals to this panel, a full-time supervisor is not justified. Upon receipt of an alarm or trouble signal at the panel, an audible alarm alerts all the operators in the control room of this condition.

The fire detection and alarm system includes the following, which is supplemental to the requirements of NFPA 72D, Class A:

a. For Halon extinguishing systems which are actuated by two zones of detection in the same hazard area, each zone is not designed to maintain detection capabilities during a single ground fault or break. Upon generation of a trouble signal in one of the fire detection zones, a trouble alarm is sent to the control room. In this condition, the system automatically discharges the Halon on receipt of an alarm signal from the second zone of detection.

b. Upon receipt of a trouble signal on the fire protection annunciation panel in the control room, an operator is dispatched immediately to the respective zone to investigate the cause of the trouble signal.

The alarm system is of the limited power type as defined in Article 760 of the N.E.C. and meets the requirements of Class I circuits given in the N.E.C., 1978, Article 725-11.

Suppression system and main header isolation valves are provided with position switches which are grouped into zones for annunciation of out-of-normal condition in the control room. Valves which are not electrically supervised will be subject to administrative supervision which will consist of locking valves open and periodic inspection. This, however, does not include the drain, vent, and hose valves which are normally maintained closed and instrument root valves which are normally maintained open since reversing the valve position will not inhibit operation of the FPS.

The general area alarm is by electric horns located throughout the power block. The sound pressure level is either 90 db or 110 db, both measured 10 feet from the source, depending upon background noise levels. In addition, integral flashing lights are installed with the horn within each diesel generator room. Local manual pull stations are installed throughout the power block buildings. The detector bases are equipped with lights to quickly identify the detector that has actuated.

Line-type thermal detectors are provided for the reactor coolant pumps as well as the cable trays inside the containment. As a backup to these detectors, photoelectric type duct detectors are provided in the containment cooling system.

As noted in Appendix 9.5B, all detectors alarm locally as well as in the control room.

9.5.1.2.2.3 Fire Barriers

Fire barrier walls, floors, and ceilings are provided as indicated necessary by the results of the fire hazards analysis, Appendix 9.5B. The fire barrier ratings and locations are indicated in Figure 9.5.1-2 (drawing series A-1800). Fire barrier configurations that are unique or not directly bounded by fire testing are evaluated in M-663-00017A.

The design, construction, test method, and acceptance criteria for the fire barriers and related items are as follows:

a. Fire Rated Barriers - Per applicable sections (determined by construction type) of ASTM E-119, UL standards, and state building codes.

b. Fire Barrier Penetration Seals - All fire rated cable tray penetration seals were tested by an independent testing laboratory utilizing the following for test guidance:

   1. ASTM E 119
   2. IEEE 634
   3. ANI/MAERP standard test method

   The test program, procedures, and results were approved by ANI. The tests consisted of exposing all typical penetration seals (installed in a test slab) to an ASTM E 119 standard controlled test fire. All powerblock penetrations passed the test including a hose stream test.

   Fire stops are provided for powerblock cable trays at each penetration of a fire-rated wall, floor, or ceiling. The cable rating is compatible with the fire stop construction. Vertical tray runs that are not protected by the automatic fire detection and suppression system generally do not exceed 20 feet in length. In isolated cases where this is not the case, auxiliary protection is provided in the form of fire retardant coatings, automatic sprinklers, or other means deemed necessary by the Fire Hazards Analysis. Horizontal tray runs are generally protected by separating the corresponding redundant circuits. This is accomplished by 3-hour fire barriers between the redundant circuits. Where this is not feasible, a combination of alternate fire protection means is used such as fire resistance materials, automatic fire detection, and suppression system or other provisions deemed necessary by the Fire Hazards Analysis. Sprayed on fireproofing is not utilized on cables in safety-related systems since this would affect cable friction and thus damping ratios.

The results of the tests, which confirm the integrity of the fire penetration seals, are documented in various fire test reports.

c. The notes contained on drawing A-1801 define the structural steel fire proofing requirements. The structural steel of all of the ceilings of the fire areas is fire proofed for 3-hour protection with the exception that no fireproofing is provided for the ESW Vertical Loop Chase and the underside of the fuel building roof.

d. Fire Dampers/Fire Doors - Test methods and acceptance criteria for dampers requiring a fire rating are based on the guidelines established in Underwriter Laboratories standard UL-555 or UL-555S. The devices carry the UL label and are installed in sleeves of 10 gauge (minimum) steel which are attached to the ductwork and supported by the wall or steel supports protected with 3-hour fireproofing material. The devices are positioned between the two wall surfaces, with the exception of two fire dampers in the auxiliary building.

   Test methods and acceptance criteria for standard type doors requiring a fire rating are based on the guidelines established in ASTM-E-152 or they are U.L. labeled.

   Labeled fire doors are provided, where feasible, with an equivalent rating to the fire barrier in which they are installed. Where required, security devices, thresholds, door sweeps, and weatherstripping are installed on door assemblies.

   The installation of these devices is judged not to adversely affect the performance of the door and frame assembly.

e. Metal Deck Roof - Construction of the metal deck roof assemblies conforms to FM category 1 or UL Class A. The test method and acceptance criteria are as specified in UL-790 or the FM-approved guide.

9.5.1.2.2.4 Smoke and Heat Isolation and Ventilation

Smoke and heat vents are provided in the turbine building, and auxiliary boiler room. The turbine building and auxiliary boiler room vents are fusible link operated, whereas the diesel rooms utilize the exhaust air flow path. The turbine building vents are sized on the basis of at least 1 square foot of venting area for each 100 square feet of floor area. The auxiliary boiler room and diesel generator room vents are sized on a basis of at least l square foot of venting area for each 200 square feet of floor area. The ventilation systems in other areas of the plant are designed to isolate and confine the smoke and heat from a fire in the affected areas. Portable equipment is used to vent the smoke, as required.

Smoke and heat transfer from one area to another during a fire are restricted, and the normal plant ventilation system and portable equipment are used after the fire is extinguished.

a. The ventilation system equipment used in the fire and smoke isolation of areas in the auxiliary, fuel, radwaste, and control buildings consists of fusible-link actuated fire dampers, power-operated isolation dampers, and centrifugal and vaneaxial fans.

b. Ventilation system operations are controlled from the control room. Fire and smoke are automatically isolated in all areas of the auxiliary, radwaste, fuel, and control buildings by the fusible-link actuated fire dampers located in all rated fire barrier walls or by remote manual operation of area ventilation systems. Individual areas of the control building can be isolated from the normal supply and exhaust HVAC systems by control switches in the control room.

c. Following a fire, the fire dampers are accessible only from that area where they are located. All other systems and components would be remotely operable from the control room.

d. All exhaust fans, with the exception of the control building fans, are centrifugal with the motor located outside of the airstream, making them less susceptible to high gas temperatures. The fans are capable of processing air of temperatures at least as high as the fusible link melting temperature (160 F) of the fire dampers. The control building exhaust fans are vaneaxial with the motors located in the process airstream. The fan motor is designed for a minimum 150°F temperature rise.

Since the exhaust fans are all downstream of the system filter units, they are not subject to damage from high temperature particles.

Since the HVAC systems of site structures are independent from that of the powerblock, the ventilation air paths and duct penetrations of the site HVAC systems will not cause the spreading of fire or smoke from site structures to any powerblock safety-related structures, systems or components. Fire dampers are provided at each penetration through any fire rated walls or partitions.

9.5.1.2.2.5 Other Fire Protection Features

EMERGENCY LIGHTING - Section 9.5.3 describes the emergency lighting system and the design features provided for post fire access and egress.

RADIO COMMUNICATION - A portable radio annunciation system is provided which may be used by the fire brigade and other operations personnel involved in safe plant shutdown.

FIRE RESISTANT AND NONCOMBUSTIBLE MATERIALS - Construction materials are noncombustible or Class A rated (regarding flame spread and smoke development) to the maximum extent practical. Insulation over metal roof decking and the vapor barrier is securely attached by approved noncombustible adhesive and perimeter fastening.

Suspended acoustical ceilings and their supports are of UL listed, noncombustible construction. Insulation for pipes and ducts and their adhesives are noncombustible and UL listed, where practical. Concealed spaces are devoid of combustibles, as practical. Materials which give off toxic fumes when exposed to fire are prohibited, where practical. Excluding charcoal adsorbers, all ventilation prefilters for filtration units are UL Class 1.

COMBUSTIBLE OIL - Areas in which combustible oil-filled equipment is located are prepared to eliminate the spread of the combustible oil from the immediate area of the equipment. An enclosed gravel filled pit is located beneath the yard transformers. The pit is sized to contain oil from the largest transformer served by the pit and the water from two transformer water spray systems operating for 10 minutes (unless the pit serves only one transformer). All transformers inside the building are the dry type. A fire barrier of at least 2-hour rating is provided between all oil-filled transformers which are separated by less than 50 feet (except between the station service and start-up transformers which are within 40 feet of each other without requiring a wall).

The underground diesel fuel storage tanks are set on a firm foundation, backfilled with noncorrosive sand surrounding the tank (6 inches minimum) and provided with a covering of 2 feet (minimum) of earth.

Each diesel fuel oil day tank is provided with protection features to preclude the uncontrolled leakage of diesel fuel. The design features provided for the day tank were reviewed and accepted by the NRC at the Wolf Creek Fire Protection Audit of February 6 to 9, 1984.

An oil collection system to collect and contain the lubricating oil for each reactor coolant pump is installed. See section E-1F9905 for further discussion of the lube oil collection tanks.

ION EXCHANGE RESINS - To ignite and to sustain combustion is relatively difficult in ion exchange resins that are in a hydrated form (as opposed to those in dehydrated form).

The ion exchange resins are received and stored in a hydrated form in nonsafety-related areas of the plant (radwaste and turbine buildings) which are separated from the safety-related areas by 3-hour fire barriers. The only safety-related area of the plant which normally contains resins is Fire Area A-8 at elevation 2000 in the auxiliary building. All of the resin, however, is contained in ASME pressure vessels filled with water. Spent resin is sluiced in a spent resin storage tank in the radwaste building. Fresh resins, still the hydrated form, are introduced into the ion exchange vessels from elevation 2026 of the auxiliary building Fire Area A-26. Administrative controls ensure that resin only in quantities required for immediate use in recharging the vessels is brought into this area, and the containers are hauled away in a timely manner. Fire Area A-26 is separated from adjacent areas by a 3-hour-rated fire barrier, and automatic smoke detection is provided at the ceiling of the room. This Fire area is within 75 feet of the hose stations in the corridor (Fire Area A-16 - see Figure 9.5.1-2, Sheet 3). Portable extinguishers are installed outside the room in the corridor.

There are no post-fire safe shutdown (PFSSD) components located in area A-26. This fire area only contains cables associated with PFSSD equipment located in other areas. A fire in this area will be confined by the fire barriers until manually extinguished. The PFSSD analysis, documented in E-1F9910, concludes that PFSSD capability is assured if a severe fire occurs in this area. Therefore, an automatic suppression system is not installed for Fire Area A-26.

9.5.1.2.3 System Operation

In addition to the standard fire suppression uses identified below, the system is also used as a source of water for fire brigade training and as a backup source of raw water for plant safe shut down for design basis accidents other than fire.

Automatic wet-pipe sprinkler system operation is initiated on a rise in the ambient temperature to the melting point of fusible links on sealed sprinkler heads, thus permitting the heads to open. Flow of water through mechanical alarm valves or devices energizes local alarms and registers an alarm condition on the audio-visual fire protection control panel in the control room. Once initiated, wet-pipe sprinkler system operation is terminated manually by shutting an isolation gate valve. The status of these valves is administratively controlled or electrically supervised and annunciated in the control room unless specifically stated otherwise.

Water spray system actuation is either manual or automatic, depending upon the hazard. Automatic operation is initiated by rate compensated thermal detectors. These sensors detect attainment of a high fixed temperature or rapid rate of temperature rise and release a tripping device which opens the deluge valve and thus supplies water under pressure to the spray nozzles. Actuation of the heat responsive device also initiates a local alarm and registers an alarm condition on the audio-visual fire protection control panel in the control room. A pressure switch in the alarm lines from the deluge valve transmits an alarm to the fire protection control panel to indicate the deluge valve trip and water flow. System operation is terminated by shutting an isolation gate valve manually. Closure of this valve registers an

alarm in the fire protection control panel in the control room. Local hand pull stations are provided for alarm and/or actuation function. The local hand pull stations for the main and startup transformers provide alarm functions only; a key operated switch on their respective fire panels provides the means for electric/ manual actuation of the suppression system. The local hand pull stations on all other automatic water spray systems are provided to trip the deluge valves manually. Manual tripping is annunciated in the control room.

The main and startup transformers are automatically deenergized upon actuation of the water spray system to prevent damage to the transformer bushings. To avoid inadvertent spray system actuation spurious transformer trips, dual zone detection is provided for these transformers. The first zone of detection alarms locally and in the control room. Detection by both zones trips the deluge valve and deenergizes the transformer.

Manual water spray system is actuated by opening a normally locked closed isolation valve. Manual opening of the valve is alarmed in the control room.

Preaction sprinkler system operation is initiated by an automatic smoke or thermal detector, as appropriate for the hazard. These sensors detect either particles of combustion (ionization and photoelectric detectors) or attainment of a fixed high temperature (thermal detectors) and release a tripping device to open the deluge valve, thus supplying water under pressure to fill and pressurize the system. Actuation of a detection device also initiates a local alarm, and registers the alarm condition on the audio-visual fire protection control panel in the control room. In addition, water flow is annunciated in the control room. Preaction sprinkler system operation is continued on rise in ambient temperature to the melting point of fusible links on sealed sprinkler heads, thus permitting the heads to open. Once initiated, system operation is terminated by manually shutting an isolation gate valve. Closure of this valve is annunciated in the control room. The piping downstream of the deluge valve is pressurized to approximately 20 psig with air. Low air pressure in this piping gives an audible and visual alarm in the control room, thus loss of air pressure, which is indicative of open sprinkler heads, will be alarmed.

Local hand pull stations are provided to trip the deluge valve manually. Manual tripping is annunciated in the control room and locally.

The containment manual preaction sprinkler systems operation is initiated by the operation of the system isolation valve. Thermal detectors, sensing high temperature, initiates a local alarm and registers the alarm condition on the audio-visual fire protection control panel in the control room. The preaction valve release device is maintained in the tripped position. Upon manually opening the system isolation valve, water under pressure is released to fill the system piping. In addition, water flow is annunciated in the control room. The sprinkler system operation is continued on rise in ambient temperature to the melting point of the fusible link on the sealed sprinkler heads, thus permitting the heads to open. Once activated, system operation is terminated by manually shutting an isolation gate valve.

Hose racks are operated manually by plant personnel. Each rack is controlled by a normally closed hose valve which may be opened without release of water until the last fold of hose is removed from the rack. Hose nozzles are fully adjustable from complete shutoff to a straight stream, except in areas where high voltage electrical equipment presents a shock hazard. In such areas, hose nozzles without the straight stream capability are provided.

Halon 1301 system operation is initiated by a cross-zoned ionization smoke detection system. The detectors are mounted in the ceiling of the area protected, sense particles of combustion, and provide early warning of fire to activate the suppression system, thus preventing the development of a deep seated cable tray fire. The first zone of detection initiates an alarm locally and in the control room. Detection by both zones sounds a local horn to warn against impending discharge and starts a discharge time delay device to permit personnel to leave the area.

Halon is discharged after a preset time delay by actuation of a solenoid valve on the pilot Halon cylinder, applying pilot pressure to the control heads on other cylinders in the bank, as required. A minimum 5-percent Halon 1301 concentration is achieved in the enclosure to be protected. In addition, the system is designed to provide a 5-percent concentration for 10 minutes at the elevation of highest combustible material in each area protected. The 5-percent concentration time may be less than 10 minutes for the upper section of the vertical control room chase. Halon that is expelled is manifolded and piped to the hazard area and discharged through nozzles. Halon 1301 system piping does not contain Halon until the system is activated.

A pressure switch is provided to alarm in the control room, indicating Halon discharge. Prior to Halon discharge, selected ventilation dampers close and selected ventilating and/or air conditioning fan motors associated with the hazard area shut down. Except for the Control Room Trenches Halon System, a transfer valve or switch is provided to manually transfer the actuation to the reserve bank after a main bank discharge. For the control room trenches and chase, automatic discharge of a second cylinder in the main bank is timed after the discharge of the primary main bank cylinder. The Control Room Trenches system uses a replacement reserve; the main cylinders, if discharged, must be removed and replaced by the reserve cylinders which are stored adjacently. Where one bank of cylinders serves more than one area, solenoid-operated selector valves are installed to direct the discharge to the affected area. Local manual actuation is possible by pulling a lever in the pilot cylinder. A pull pin and seal prevents accidental operation of the manual lever. Pushbuttons are provided for areas served by Halon 1301 system for remote manual actuation. Manual actuation is similar to detection by both zones of detection. The time delay device is adjustable. Each Halon system is provided with a momentary contact abort switch to delay the discharge for evacuation purposes. A keylock switch is also provided to disable the system during maintenance operations.

A pressure gauge on each Halon 1301 storage cylinder is provided, and the pressure reading is periodically monitored to ensure that the required pressure is maintained. With the local application of Halon 1301, a leaking cylinder or leakage to adjacent areas poses no immediate danger, since the resulting concentrations are less than 10-volume percent. The activation of the Halon system in an adjacent area, including the cable trenches in the control room, will not endanger the inhabitants within the control room, since the amount of Halon 1301 is sized only for the areas served and the control room is normally pressurized. The control building ventilation system and control room pressurization are discussed in Section 9.4.1.

The fire and smoke detection and alarm devices are activated by the several stages of fire. Ionization detectors alarm at the presence of invisible combustion particles during the incipient stage of a fire. Flame detectors respond directly to the infrared radiation emanating from a flickering flame sustained for at least 5 seconds. These are located in the areas where fire develops rapidly with a minimum or no incipient stage. Photoelectric smoke detectors respond directly to visible smoke concentrations of not

less than 1.2 percent per foot of light obscuration caused by smoke. These devices are located in those areas where the use of ionization detectors is precluded by high air flow in the area or due to the particles of combustion, such as truck exhaust in the radwaste building truck bay, normally found in the area. Thermal detectors react to the attainment of a high fixed temperature and provide release service for certain automatic systems as discussed above. Air duct detectors sample the air moving through ducts and alarm at the presence of particles of combustion, or the presence of smoke (concentrations of not less than 1.2 percent per foot of light obscuration caused by smoke as above). All air monitoring, detection, and alarm devices are supervised for reliability in accordance with NFPA 72D, 1975.

The detection and alarm system is powered by four control units. The alarm control units also initiate the actuation of automatic suppression systems and perform other fire-related functions, such as driving area alarm horns and tripping miscellaneous equipment. The multiplexer units installed within the alarm control units constantly interrogate in a preprogrammed sequence the status of contacts powered by the alarm control units and the open dry contacts (such as valve supervision, water flow alarms, etc.) connected directly to them. The multiplexer units transmit this status information to the fire protection control panel located in the control room. The fire protection control panel also provides an audio-visual display of specific trouble areas, based on the status input from the multiplexer units. The area local alarm control unit can be silenced and reset from the main fire protection control panel.

9.5.1.3 Safety Evaluation

A comparison of the FPS design with NRC Branch Technical Position, APCSB 9.5-1, Appendix A is presented in Appendix 9.5A. An evaluation of the fires that could indirectly or directly affect Category I safety-related structures, systems, and components, and other post fire safe shutdown equipment, is included in Appendix 9.5B.

The powerblock has been designed to provide protection for safety-related equipment from hazards and events which could reasonably be expected to occur. This protection is provided to ensure that recovery from the event is possible, to ensure the integrity of the reactor coolant pressure boundary, to minimize the release of radioactivity, and to enable the plant to be placed in a safe condition.

Appendix 9.5B provides the basis for and the results of integrated fire hazards analyses for the plant to demonstrate that the plant can be safely shutdown following a fire in any fire area of the plant.

Even though each area of the plant and each system was designed individually to properly consider the above events, an integrated analysis of rooms, systems, and events is performed to ensure that the above objectives are realized for each postulated event.

Except for an associated containment penetration, the FPS is not a safety-related system.

SAFETY EVALUATION ONE - Sections 6.2.4 and 6.2.6 provide the safety evaluation for the system containment isolation arrangement and testability.

9.5.1.4 Tests and Inspection

The equipment and systems are inspected and tested after installation in accordance with applicable codes and requirements including the requirements of local and state authorities and fire insurance underwriters who have recognized fire protection association standards.

The fire protection system reliability is ensured by periodic test and inspection.

The pumps are shop tested to ensure that pump characteristics are as specified. Operational checks, inspection and testing required to maintain fire protection, detection and alarm systems integrity are discussed in the WCGS Fire Protection Program.

Preoperational testing is described in Chapter 14.0. The performance and structural and leaktight integrity of the FPS is routinely demonstrated during plant operation.

9.5.1.5 Instrumentation Applications

Section 9.5.1.2 provides a description of the instruments used to monitor and actuate the various functions of the FPS.

9.5.1.6 Personnel Qualification and Training

The WCGS Fire Protection Program describes the personnel qualifications and training for the station personnel responsible for firefighting, including those responsible for maintaining and inspecting the FPS equipment.

9.5.1.7 Equipment Operability

The technical requirements of the Fire Protection System (FPS) are described in Fire Protection Administrative Procedures. The Fire Protection Administrative Procedures also describe the operability requirements and actions required, if not operable, of the FPS. A list of all the surveillance procedures required to prove operability of all FPS equipment is maintained in the Fire Protection Administrative Procedures. This list also describes the operability requirement that each procedure covers.

9.5.1.7.1 Fire Detection Instrumentation

Operability of the fire detection instrumentation ensures that both adequate warning capability is available for the prompt detection of fires and that Fire Suppression Systems, that are actuated by fire detectors, will discharge extinguishing agents in a timely manner. Prompt detection and suppression of fires will reduce the potential for damage to safety-related equipment and is an integral element in the overall facility fire protection program.

Fire detectors that are used to actuate fire suppression systems represent a more critically important component of a plant's fire protection program than detectors that are installed solely for early fire warning and notification. Consequently, the compensatory action for inoperable fire detection instrumentation is more stringent.

The loss of area wide detection capability for Fire Suppression Systems, actuated by fire detectors represents a significant degradation of fire protection for any area due to the subsequent loss of automatic suppression capability. The establishment of frequent fire patrols in the affected areas is required to provide detection capability until the inoperable instrumentation is restored to operability.

9.5.1.7.2 Fire Suppression Systems

The operability of the fire Suppression Systems ensures that adequate fire suppression capability is available to confine and extinguish fires occurring in any portion of the facility where safety-related equipment is located. The Fire Suppression Systems consists of the water system, spray, and/or sprinklers, Halon, and fire hose stations. The collective capability of the Fire Suppression Systems is adequate to minimize potential damage to safety-related equipment and is a major element in the facility Fire Protection Program.

In the event that portions of the Fire Suppression Systems are inoperable, alternate backup fire-fighting equipment is required to be made available in the affected areas until the inoperable equipment is restored to service. When the inoperable fire-fighting equipment is intended for use as a backup means of fire suppression, a longer period of time is allowed to provide an alternate means of fire fighting than if the inoperable equipment is the primary means of fire suppression.

The Surveillance Requirements provide assurance that the minimum operability requirements of the Fire suppression Systems are met. An allowance is made for ensuring a sufficient volume of Halon in the Halon storage tanks by verifying either the weight or the level of the tanks. Level measurements are made by either a U.L., or F. M. approved method, or by ultrasonic measurement corrected for temperature using equipment calibrated to standards traceable to NIST. The term, "simulated fire" test signal, is interpreted to mean actuation of an automatic Fire Protection System by any of the release mechanisms provided, e.g., fire detectors, hand pull stations, fusible line/mechanical, manual, hydro/mechanical, etc.

In the event the Fire Suppression Water System becomes inoperable, immediate corrective measures must be taken since this system provides the major fire suppression capability of the plant.

9.5.1.7.3 Fire Barrier Penetrations

The functional integrity of the fire barrier penetrations ensures that fires will be confined or adequately retarded from spreading to adjacent portions of the facility. This design feature minimizes the possibility of a single fire rapidly involving several areas of the facility prior to detection of and extinguishing of the fire. The fire barrier penetrations are a passive element in the facility fire protection program and are subject to periodic inspections.

Fire barrier penetrations, including cable penetration barriers, and fire doors are considered functional when the visually observed condition is the same as the as-designed condition. Fire dampers accessible for drop testing are considered functional if they fully close, as designed, when subjected to periodic drop testing outlined in plant procedures. Fire dampers inaccessible for drop testing may be visually inspected to assess functionality, provided that accessible damper drop testing results do not indicate an adverse trend. Fire damper test sampling and frequency are discussed in procedure AP 10-100. For those fire barrier penetrations that are not in the as-designed condition, an evaluation shall be performed to show that the modification has not degraded the fire rating of the fire barrier penetration.

During periods of time when a barrier is not functional (Outside of Containment), either: (1) a continuous fire watch is required to be maintained in the vicinity of the affected barrier, or (2) the fire detectors on at least one side of the affected barrier must be verified operable and an hourly fire watch patrol established, until the barrier is restored to functional status.

During periods of time when a barrier is not functional (Inside of Containment), either: (1) Verify the operability of the Containment Cooler Fire Detection Zone 219, or (2) Provide compensatory measures described in procedure AP 10-103, Attachment B.

9.5.1.7.4 Fire Protection Plan

AP 10-100, Fire Protection, explains the requirements for the entire fire protection plan. It is an administrative control procedure which describes the Fire Protection Program in section 9.5.1.7.5.

9.5.1.7.5 Fire Protection Program

The WCGS Fire Protection Program uses a defense-in-depth approach to fire protection to ensure that the plant can be safely shut down and public health and safety maintained in the event of fire. This protection is accomplished through automatic detection and suppression systems, trained personnel, fire emergency procedures, and administrative controls.

9.5.1.7.5.1 Fire Protection Program Organization and Individual Responsibilities

9.5.1.7.5.1.1 Administrative Organization

The administrative organization of WCGS as it relates to the Fire Protection Program is described in Section 13.1.

9.5.1.7.5.1.2 Operational Organization

The operational organization as it relates to the Fire Protection Program is described in Section 13.1.

9.5.1.7.5.1.2.1 Fire Brigade

The WCGS Fire Brigade is composed of a minimum of five persons from the on duty work force. The five member brigade is structured that one member serves as the Fire Brigade Leader, and the four other members serve as the Firefighters. The Brigade does not include any of the plant physical security personnel required to be available to fulfill the response requirements of paragraph 73.55(h)(2) of 10 CFR Part 73, "Physical Protection of Plants and Materials." The Fire Brigade is responsible to the Shift Manager for those actions necessary to assist in extinguishing and containing the spread of fire. Individual and collective efforts of the Brigade Firefighters are directed by the Fire Brigade Leader. The four Fire Brigade Firefighters are directly responsible for fire extinguishment and control, while the Fire Brigade Leader is responsible for command and control of the fire scene.

9.5.1.7.5.1.2.2 Fire Brigade Leader

The Fire Brigade Leader is a member of the Fire Brigade designated by the Shift Manager to direct the efforts of the fire response. In the event of a fire, the Fire Brigade Leader selects a command location and directs the other brigade members in the fire attack strategy. The Fire Brigade Leader establishes communications with the Control Room and keeps the Shift Manager informed of the progress of the firefighting effort. He is responsible for the safety of the brigade firefighters. The Fire Brigade Leader evaluates the hazards that the particular circumstances present and ensures that brigade firefighters are properly equipped to deal with those hazards. The Fire Brigade Leader is not required to don gear during a fire response or during practice/drill exercises. In the event that off-site fire fighting personnel are present, the Fire Brigade Leader uses them as appropriate.

9.5.1.7.5.2 Training and Qualifications

9.5.1.7.5.2.1 Fire Brigade

The grace periods identified for fire brigade training and drill frequencies are for the purpose of providing scheduling flexibility to support items such as (but not limited too): unscheduled plant outages, regularly scheduled refueling outages, crew shuffles, and Operations' training schedule. Individual fire brigade members are allowed a 31-day grace period to makeup scheduled periodic refresher training that is

missed. The 31-day clock starts from the date the missed course(s) was last offered in the requalification cycle. For the purpose of drills and training with off-site fire department personnel, a year is defined as a period from January 1 to December 31 of a given year.

9.5.1.7.5.2.1.1 Physical Qualification

Each person assigned to the Fire Brigade receives an annual (365) physical examination consistent with their designated role during a fire response. A brigade physical is given to Fire Brigade Firefighters and evaluates those conditions which are not acceptable for strenuous firefighting activities. A respiratory physical is given to Fire Brigade Leaders to verify that they can stand in a command role during a fire response.

9.5.1.7.5.2.1.2 Initial Training for Qualification of Fire Brigade Members

Before being assigned to the Fire Brigade, a person must successfully complete a formal training program established by the Supervisor Fire Protection. This program may consist of off-site training conducted by outside organizations, on-site training conducted by WCGS personnel, or a combination of both. Training should include, but is not limited to the following:

a. Indoctrination to the plant fire fighting plan with specific coverage of each individual's responsibilities.

b. Identification of the fire hazards and associated types of fires that could occur in the plant and an identification of the location of such hazards.

c. The toxic characteristics of expected products of combustion.

d. Identification of the location of fire fighting equipment for each fire area and familiarization with the layout of the plant, including access and egress routes to each area.

e. The proper use of available fire fighting equipment and the correct method of fighting each type of fire. The types of fires in cables and cable trays, hydrogen fires, fires involving flammable and combustible liquids or hazardous process chemicals, construction fires, and record file fires.

f. The proper use of communication, lighting, ventilation, and emergency breathing equipment.

g. The proper method for fighting fires inside buildings and confined spaces.

h. The direction and coordination of the fire fighting activities (Fire Brigade Leaders only).

NOTE: Fire Brigade Leaders and all other operations personnel, assigned to Fire Brigade duty, also receive training in the following areas:

i. Detailed review of fire fighting strategies and procedures.

j. Review of the latest plant modifications and corresponding changes in fire fighting plans.

9.5.1.7.5.2.1.3 Practice Sessions

All Fire Brigade members participate in training exercises designed to provide experience in actual fire extinguishment based on their role during a fire response. Firefighters participate in training exercises designed to provide experience in actual fire extinguishment and the use of emergency breathing apparatus under strenuous conditions, as those which may be encountered in fire fighting. These exercises are included in each Fire Brigade Member's initial training. In order to maintain qualifications, each Fire Brigade Firefighter must repeat participation in a practice session at least once every 365 days, with a 90-day grace period. Fire Brigade Leaders are required to participate in these training exercises in a command role at least once every 365 days, with a 90-day grace period.

9.5.1.7.5.2.1.4 Assignment to Fire Brigade Duty

Upon the completion of the training outlined in Sections 9.5.1.7.5.2.1.2 and 9.5.1.7.5.2.1.3 the individual's name is placed on the Fire Brigade roster. They may then be assigned to Fire Brigade duty as needs require.

9.5.1.7.5.2.1.5 Reoccurring Training for Fire Brigade Members

To maintain active status on the Fire Brigade Roster, the following is required to be completed within the required frequency:

Activity	**Fire Brigade Firefighters**	**Fire Brigade Leader**
Physical qualification (9.5.1.7.5.2.1.1)	Required	Only a respiratory protection physical is required
Practice session (live fire training) (9.5.1.7.5.2.1.3)	Required	Required – but participates only as a Leader and is not required to don gear
Reoccurring training	Required	Required – but participates only as a Leader and is not required to don gear
Participate in at least two fire drills per year	Required	Required – but participates only as a Leader and is not required to don gear

Over each two year period following initial qualification, brigade members receive periodic refresher training such that all areas of Section 9.5.1.7.5.2.1.2 are covered within the two year period (730 days), with a 120-day grace period. The training may consist of a combination of classroom work and drills as

9.5.1.7.5.2.2 Training for Personnel Authorized Unescorted Access to WCGS

All WCGS personnel, vendor personnel, etc., requiring unescorted access to the WCGS receive basic fire safety training during initial indoctrination. Refresher training is given as part of orientation training. Training includes, but is not limited to, the following:

a. Recognition and response to alarms and announcements

b. WCGS fire protection policies

9.5.1.7.5.2.3 Training for Off-Site Fire Department Personnel

The off-site fire department personnel receive yearly training in the following areas:

a. Radiological precautions, principles, and personal exposure monitoring

b. Site layout, access routes, and major plant fire hazards

c. Contamination monitoring and decontamination techniques

d. Site firefighting equipment and locations

e. Coordination with WCGS Fire Brigade

Agreements with off-site firefighting organizations are on file as part of the WCGS Emergency Planning basis.

9.5.1.7.5.2.4 Training for Fire Watches

Personnel performing duties as fire watches receive training in the following areas:

a. Purpose and duties of fire watches

b. WCGS fire prevention policies

c. Plant layout and locations of portable and installed firefighting equipment

d. Operation of assigned portable equipment for fire watches

9.5.1.7.5.2.5 Training for Maintenance and Inspection Personnel

Personnel performing maintenance and inspection functions on Fire Protection equipment are trained in the maintenance or inspection activity. Periodic retraining of these personnel is conducted.

9.5.1.7.5.2.6 Drills

9.5.1.7.5.2.6.1 Frequency

9.5.1.7.5.2.6.1.1 Each shift Fire Brigade participates in a planned drill at least once per quarter to achieve at least four drill sessions every 365 days, with a 90-day grace period. Each shift Fire Brigade participates in an unannounced, backshift drill at least once per year. Unannounced drills may be scheduled as the plant work schedule allows, and to accommodate requests from outside assessment agencies. This may result in multiple unannounced drills over a short time frame.

9.5.1.7.5.2.6.1.2 The off-site fire department participates in at least one WCGS fire drill yearly. Yearly is defined as a period from January 1 to December 31 of a given year. This may be in combination with other drills.

9.5.1.7.5.2.6.1.3 At 3 year intervals, a randomly selected unannounced drill is critiqued by qualified individuals independent of the licensee's staff. A copy of the written report from such individuals shall be available for NRC review. A 3 year interval is defined as occurring at least once in a 3 calendar year period.

9.5.1.7.5.2.6.2 Drill Monitoring

Drill monitoring is performed by the Fire Protection Staff with the assistance of other plant personnel as designated by the Supervisor Fire Protection.

9.5.1.7.5.2.6.3 Drill Critiques

Drill critiques are conducted for drill participants by the Fire Protection Staff and assigned Drill Controllers. The Fire Protection Instructor determines what corrective actions, if any, are required as a result of the drill and ensures that these actions are taken in a timely manner.

9.5.1.7.5.3 Administrative Controls for Fire Prevention

Implementing procedures have been developed in the following fire prevention areas:

9.5.1.7.5.3.1 Transient Ignition Sources

A permit system controls the use of transient ignition sources. The Supervisor Fire Protection designates those individuals who are qualified to conduct an evaluation of the potential fire hazards of each work activity which requires the use of a transient ignition source. Personnel performing the evaluation of such activities are responsible for specifying any necessary precautions or limitations necessary for the safe completion of the prescribed work activity.

9.5.1.7.5.3.2 Combustible Materials

A permit system controls the storage and handling of combustible materials. Welding, cutting and acetylene-oxygen gas systems inside or adjacent to safety-related areas of the WCGS are controlled by the Transient Ignition Source program.

9.5.1.7.5.3.3 Inoperative Detection, Alarm, or Suppression Equipment

A permit system controls those activities that render fire detection, alarm, or suppression equipment inoperative. This system specifies actions and any precautionary measures required prior to and during deactivation of any such equipment.

9.5.1.7.5.3.4 Testing and Maintenance of Fire Protection Equipment

An inspection plan for fire protection equipment has been developed. Personnel responsible for maintenance and inspections of the fire protection system are listed in Sections 13.1.2.2.2 and 13.1.2.2.7. The inspection plan includes the types, frequency and detailed procedures for inspection. Test procedures specify the steps necessary to verify conformance with design and system performance requirements following modification, repair or replacement of portions of the fire protection system.

9.5.1.7.5.3.5 Leak Testing

Leak testing is accomplished by approved methods only. The use of open flame or combustion smoke for this purpose is specifically prohibited.

9.5.1.7.5.3.6 Smoking

Smoking is prohibited in the Protected Area Boundary except where specifically designated.

9.5.1.7.5.4.0 Fire Emergency Procedure and Pre-Fire Plans

9.5.1.7.5.4.1 A Fire Emergency Procedure directs the response to fire, explosion, and unusual hazardous conditions. This procedure details:

a. Actions to be taken by the person discovering a fire

b. Actions to be taken by the Control Room operators, including announcement of alarm, notification and activation of the Fire Brigade, initiation of suppression systems, and notification and coordination of off-site fire department.

c. General instructions to Fire Brigade including assembly points, protective equipment requirements, communications, and location of special fire protection equipment

d. Salvage actions to be taken to minimize post-fire damage and to implement restoration

9.5.1.7.5.4.2 Pre-Fire Plans have been developed for potential fire hazards which could affect safety-related systems. Plan content is based upon the USAR comparison to 10 CFR 50, Appendix R. Reference Table 9.5E-1, Section III.K.12.

9.5.1.7.5.5 Quality Assurance

The Quality Assurance Program for fire protection is specified in Section C of Table 9.5A-1.

9.5.2 COMMUNICATION SYSTEMS

The communication systems include internal (in-plant) and external communications designed to provide convenient and effective communications among various plant locations, and between the plant and locations external to the plant.

The public address, and maintenance jack systems each have their own dedicated conduit systems. The public address system conduit can be used as a raceway, where documented on engineering drawings, for non-metallic fiber optic cable used for data transmission in systems that are not used for plant process equipment control. To the extent practicable these conduits are embedded to minimize the systems exposure to hazards. The Telephone Conduit system is also dedicated except that it is also used as a raceway for metallic network cable and non-metallic fiber optic cable which supports the Local Area Network (LAN) Computer Communications.

A malfunction of a given system component will disable that particular component and hence, communications would have to be resumed using one of the remaining systems from the station. An accident, such as a fire, that disables a PA system loop would disable that particular communications loop, and thus communications would have to revert to one of the remaining systems for that entire loop. The maintenance jack system, if disabled by fire, would require repair before it could be restored to service.

9.5.2.1 Design Bases

9.5.2.1.1 Safety Design Bases

There is no safety design basis for the communication systems.

9.5.2.1.2 Power Generation Design Bases

POWER GENERATION DESIGN BASIS ONE - Intraplant voice communication is provided by a public address (PA) and telephone system.

POWER GENERATION DESIGN BASIS TWO - A maintenance jack system, utilizing plug-in telephone type handsets and handsets with 5channel jack stations, is provided to supplement the public address system.

POWER GENERATION DESIGN BASIS THREE - An evacuation alarm system is provided to serve the entire plant.

POWER GENERATION DESIGN BASIS FOUR - A dial telephone system is provided for plant-to-offsite communication on a continuous basis.

POWER GENERATION DESIGN BASIS FIVE - Telephone communication is provided between the control room and various plant locations.

POWER GENERATION DESIGN BASIS SIX - A control-room-to-offsite communication system is also provided for emergency purposes.

POWER GENERATION DESIGN BASIS SEVEN - An offsite communications system is provided for reliable plant-to-offsite communications and will consist of:

a. Touchtone Telephone System
b. Touchtone Telephones (System Independent)
c. Wide Area Fiber Optic System (Supplied by Western Resources)
d. Security Radio System
e. Plant Radio System

POWER GENERATION DESIGN BASIS EIGHT - Non-process Computer communications are provided between various plant locations for normal operations support.

9.5.2.2 System Description

The plant communication systems are illustrated schematically in Figures 9.5.2-1 and 9.5.2-2.

9.5.2.2.1 Intraplant Communications

Communications within the plant are provided as follows:

a. For operating purposes, a public address system is provided, consisting of handset stations and loud-speaker assemblies, each having its own plug-in amplifier.

   The system provides six separate independent communication channels - one general page and five party lines. In the Control Room, the system can operate in one of two selectable modes: "outage" and "normal." In the outage mode, communication between parties in the plant and the Control Room can be easily and quickly established using the Control Room page channel (channel 1). Communication between parties within the plant can be easily and quickly established by using the general page channel. In the normal mode all paging is performed on the general page channel. The party line channel is normally used after the page call is completed. As many as five party lines may communicate simultaneously. The portion of the PA system connecting the fuel transfer area in the containment, the fuel storage area and new fuel handling area in the fuel building, and the control room can be isolated from the remainder of the PA system from the control room. This permits extended use of the fuel handling communications system without disruption to the remainder of the system.

   The PA system is supplied power from two separate 208/120-V instrument busses through a transfer switch. In case of failure of the normal power source, an automatic transfer is made to the alternate source. Each instrument bus is fed through an isolation transformer and can be supplied power by one of the emergency diesel generators.

   Each PA amplifier unit is equipped with an adjustable volume control which may be turned up in high noise areas.

   Handset stations are designed with a noise-canceling mouthpiece for use in high noise areas.

   A wall-mounted handset station is provided for communication between the auxiliary control panel and other areas of the plant.

b. For communications between the control room and equipment being maintained, calibrated, or tested, a five-channel maintenance jack system consisting of a permanently interconnected series of jack stations is provided. The system provides two-way communication between multiple stations on a preselected channel by means of plug-in headsets. Power is provided through the same sources as the PA system described above.

c. An audible evacuation alarm system is provided by means of a multi-tone generator whose output is broadcast throughout the plant via the public address system. The evacuation alarm tone is discernible from that of the fire alarm. A volume control bypass relay provides maximum sound. The audible alarm system is supplemented by visual alarms in high noise areas. Manual activation of the system is from the main control room.

d. For administrative purposes, an outside automatic dial type telephone system is provided with extensions for intra use.

e. A wireless network extension of the corporate network is installed throughout the power block and station. The wireless network is an extension of the telephone system supporting the use of portable wireless phones as an alternative to the PA system for routine conversations throughout the power block and station. The wireless network supports laptops, wireless headsets, PAD’s, cameras and other wireless devices.

9.5.2.2.2 Plant-to-Offsite Communications

9.5.2.2.2.1 Touchtone Telephone System

The Touchtone Telephone System uses VoIP (Voice Over Internet Protocol) technology, which transmits calls using a digital signal over an IP network (i.e. corporate computer network). The phones system supports telephone communications throughout the power block, in the main Control Room, Security Building(s), administration building and various other buildings around the site. The new system has diverse routing consisting of a minimum of four Primary Rate Interfaces (PRI). Each PRI has 24 trunks supporting inward/outward calls to the local public telephone system.

The VoIP system is powered through a battery backup system which can provide about 8 hours of service after loss of offsite power.

9.5.2.2.2.2 Touchtone Telephone (System Independent)

In the event of a total system failure there is a minimum of 4 touchtone telephones which remain operational for access to the local Burlington exchange.

9.5.2.2.2.3 Wide Area Fiber Optic System

Provide communications connectivity to extensions at WCGS for communication with the Operating Agent Home Office.

9.5.2.2.2.4 Security Radio System

Refer to the WCGS Physical Security Plan.

9.5.2.2.2.5 Plant Radio System

The Plant Radio System consists of two repeater sites: the Turbine Building and the Meteorological Tower. The sites have multiple repeaters to support communications inside the Plant structures as well as in a 5 mile radius of the Plant. The system provides two-way portable and mobile communications for normal and emergency Plant operation. Portable and mobile users have communications capability with fixed operator positions in the Control Room, TSC and EOF, and with security radio consoles, if desired.

9.5.2.3 Safety Evaluation

Diverse systems are provided to assure a means of communication. For additional reliability, the PA system is supplied from either of two 208/120-V instrumentation busses, which can be supplied by redundant diesel generators. Power to each of the instrumentation busses is fed through isolation transformers connected to a Class IE motor control center.

The PA and maintenance jack systems are provided with power from the same sources, but are completely independent.

Those plant areas which must be manned for hot shutdown have been evaluated to ensure that the expected noise levels will not make the provided communication systems ineffective. Each of these areas, and the communication systems available in each area, are listed in Table 9.5.2-1.

Of all the areas listed in Table 9.5.2-1, the only area where high noise levels are expected is the diesel generator room. However, all PA amplifiers may be turned up by means of the volume control.

A11 communication systems circuits are enclosed in conduit or site designated raceway to provide protection for cables.

Should the PA and maintenance jack systems become inoperable, two-way radios and dial telephones are available.

There are no safety functions associated with the communication systems.

9.5.2.4 Tests and Inspections

Systems of the types described above are conventional and have a history of successful operation at existing plants.

All communication systems are inspected and tested at the completion of installation to ensure proper coverage and audibility. During plant operations, the routine use of the normal communication systems ensures their reliability. Periodic inspection and testing is performed on the backup systems. Where applicable, the radio equipment is checked and calibrated in accordance with Federal Communication Commission guidance.

9.5.3 LIGHTING SYSTEM

The plant lighting systems include normal, standby, and emergency lighting designed to provide adequate lighting during normal operation, accident conditions, a loss of offsite power, and postulated fires including a fire in the control room which requires evacuation of the control room.

9 5.3.1 Design Bases

9.5.3.1.1 Safety Design Bases

The lighting system has no safety design bases.

9.5.3.1.2 Power Generation Design Bases

POWER GENERATION DESIGN BASIS ONE - Adequate lighting systems are provided in areas used during shutdown or emergency, including the appropriate access or exit routes.

POWER GENERATION DESIGN BASIS TWO - Lighting intensities are designed for those levels recommended by the Illuminating Engineering Society.

POWER GENERATION DESIGN BASIS THREE - Mercury-vapor fixtures are not used inside the containment or directly above the fuel storage pool .

POWER GENERATION DESIGN BASIS FOUR - The main control room is given special attention to reduce glare and shadows at the control boards.

9.5.3.2 System Description

The plant lighting distribution systems are illustrated schematically in Figure 9.5.3-1.

9.5.3.2.1 Normal Lighting System

The normal lighting system consists of a complete distribution network of cables, raceways, transformers, lighting panels, fixtures, receptacles, and switches.

This system is fed from the non-Class IE auxiliary power system and is designed to provide adequate illumination levels for normal plant operating and service conditions. A selected number of normal lighting fixtures are chosen to be used in the standby lighting system.

9.5.3.2.2 Standby Lighting System

The standby lighting system consists of selected fixtures of the normal lighting system in the auxiliary, control, reactor, and turbine buildings. These fixtures are supplied from the emergency diesel generators during the loss of offsite power and are isolated from the Class IE power source on the occurrence of an SI signal. These circuits are treated as non-Class IE, non-associated.

9.5.3.2.3 Emergency Lighting Systems

The emergency lighting system consists of individual sealed-beam, self-contained, battery units to provide silhouette lighting, that is, to provide shadows and to highlight obstructions to personnel for access and egress. Eight-hour battery units are located throughout the plant, including areas requiring operator actions for safe shutdown following a fire.

The locations of emergency lighting fixtures have been selected to provide for access and egress to/from the auxiliary, control, fuel, diesel generator, reactor, and radwaste buildings; the communication corridor; and the ESW pump house. Lighting to and from the radwaste building and the ESW pump house is provided by the site. The emergency lighting provided ensures egress from these areas in the event of a loss of off-site power, a design basis event, or a fire, should the normal lighting and standby lighting (powered by the emergency diesels) be unavailable. All emergency lights credited to meet 10 CFR 50, Appendix R requirements are provided with 8-hour batteries.

As described in Section 7.4, the WCGS design ensures that there are no preplanned manual operations outside of the control room for maintenance of hot shutdown following a design basis event, a severe natural phenomenon, or a loss of offsite power. The WCGS design also includes provisions to achieve and maintain hot and cold shutdown using safety-related equipment.

For cold shutdown, operator actions may be required in the electrical penetration rooms (1409 and 1410) to isolate the accumulator tanks and to open the RHR suction valves from the hot legs. These actions may be taken as late as 72 hours following an event. The safe shutdown scenario does not require access to the containment for hot shutdown but could require access to containment for cold shutdown.

The 8-hour battery-backed emergency lighting fixtures provide lighting for fire fighting activities in the areas listed previously. For fires in the general plant areas, operator actions may be required outside of the control room to maintain hot standby. In the event of a fire, the standby lighting system should remain operable; however, the emergency lighting provides access to the areas and lighting within the areas where operator actions are required. These provisions meet the requirements of 10 CFR 50, Appendix R, Paragraph III.J.

In areas required to be manned for safe shutdown, sufficient lighting is directed at the control panels to enable operation of controls. This includes the following:

a. Main control board
b. Auxiliary shutdown panel(s)
c. Diesel generator control panel(s)

In the area above the main control board and operator's console, the emergency lighting system consists of emergency lights with 8 hour battery packs and fixtures supplied from a Class IE battery through a normally deenergized contactor. The contactor control circuit monitors the normal ac lighting feed and automatically energizes the fixtures from one Class IE battery upon loss of ac power. The contactor, switch, wiring, raceways, and fixture mounting for this system are equivalent to Class IE with regard to separation, color coding, and seismic supports.

One and one-half hour battery units are used in the turbine building and the hot machine shop. Each unit is connected to the normal lighting ac source for maintaining the charge and is automatically transferred to its internal batteries upon loss of ac power.

9.5.3.3 Failure Analysis

The emergency lighting system is designed to provide lighting in areas used during safe-shutdown, design basis events or fire fighting activities. In the event of loss of offsite power, the emergency lighting is maintained by batteries, as outlined in Section 9.5.3.2.3. The standby lighting system in these areas is powered from the emergency diesel generators in the event of the loss of offsite power. Refer to Section 9.5.3.2.2.

9.5.3.4 Tests and Inspections

AC lighting circuits are normally energized and require no periodic testing. The dc emergency lighting is inspected and tested periodically to ensure the operability of the automatic switches and other components in the system.

9.5.4 EMERGENCY DIESEL ENGINE FUEL OIL STORAGE AND TRANSFER SYSTEM

The emergency diesel engine fuel oil storage and transfer system (EDEFSTS) provides onsite storage and transfer of fuel oil to the diesel engines.

9.5.4.1 Design Bases

9.5.4.1.1 Safety Design Bases

The EDEFSTS is safety related and is required to function following a loss of offsite power to achieve and maintain the plant in a safe shutdown condition.

SAFETY DESIGN BASIS ONE - The EDEFSTS is protected from the effects of natural phenomena, such as earthquakes, tornadoes, hurricanes, floods, and external missiles (GDC-2).

SAFETY DESIGN BASIS TWO - The EDEFSTS remains functional after a SSE and performs its intended function following the postulated hazards of fire, internal missile, or pipe break.

SAFETY DESIGN BASIS THREE - Safety functions can be performed, assuming a single active component failure coincident with the loss of offsite power (GDC-44).

SAFETY DESIGN BASIS FOUR - The active components are capable of being tested during plant operation. Provisions are made to allow for inservice inspection of components at appropriate times specified in the ASME Boiler and Pressure Vessel Code, Section XI (GDC-45 and 46).

SAFETY DESIGN BASIS FIVE - The EDEFSTS is designed and fabricated to codes consistent with the quality group classification assigned by Regulatory Guide 1.26 and the seismic category assigned by Regulatory Guide 1.29. The power supply and control functions are in accordance with Regulatory Guide 1.32.

SAFETY DESIGN BASIS SIX - Following a loss of offsite power, the system provides onsite storage and delivery of fuel oil for at least 7 days of operation of the diesel generators at their continuous rating.

SAFETY DESIGN BASIS SEVEN - Following a loss of offsite power, the EDEFSTS is designed to supply fuel oil at all times under the most severe environmental conditions probable at the plant site. The EDEFSTS complies with Regulatory Guide 1.137 to the extent discussed in Table 9.5.4-3.

9.5.4.1.2 Power Generation Design Basis

The EDEFSTS serves no power generation function.

9.5.4.2 System Description

9.5.4.2.1 General Description

The EDEFSTS is shown schematically in Figure 9.5.4-1. Each diesel engine has its own individual fuel oil storage and transfer system. The EDEFSTS for each diesel engine has an underground storage tank with a transfer pump, day tank, strainers and filters, piping, valves, instruments, and controls. The oil fill connection to the underground storage tank is located above grade and includes a strainer. A truck connection, normally isolated by a locked closed valve, is provided on the transfer pump discharge piping to empty the fuel oil storage tank, if necessary, using the transfer pump.

Two strainers are installed in parallel on the transfer pump discharge piping to the day tank with an isolation capability so that the flow can be diverted to either strainer without disrupting the system operation.

An interconnecting pipe with normally locked closed valves is installed between the two transfer systems to enable the supply of fuel oil from either storage tank to be transferred to either day tank. Figure 9.5.4-1 indicates that the cross-connection piping between the two fuel oil tanks is Seismically Supported. This capability to supply fuel oil to either engine from either tank is not utilized.

The following measures prevent the accumulation of moisture and residual sediment in the bottom of the fuel storage tanks, and insure a supply of quality fuel if an event should occur that would require replenishment of fuel oil without the interruption of diesel generator operation.

- Physical arrangement of the fuel oil system is such that the fuel oil fill point and the transfer pump outlet points are more than 40-feet apart. The minimum required oil level in the tank dissipates the turbulence effect of the incoming fuel stream. There are strainers, filters and some gradient in the piping and tanks to ensure a supply of clean fuel to the diesel generators.

- Prior to adding new fuel oil to the supply tanks, onsite samples of the new fuel are taken for testing of specific gravity, viscosity, water and sediment.

- Fuel oil stored in the tanks meets the requirements of the Diesel Fuel Oil Testing Program.

- Fuel tanks are physically checked for water monthly.

- Accumulated condensate is removed from the bottom of the buried storage tanks when its presence is detected or suspected.

- Fuel tanks are emptied and cleaned of accumulated sediment at 10-year intervals.

- Protection against corrosion of the buried fuel tanks is provided by:

  - External – protective coating and an impressed current type cathodic protection system.

  - Internal –
    - Frequent removal of water eliminates this source of corrosion
    - Design of tank provides a slope to direct water to sump
    - System operation provides flow to motivate water toward sump
    - Tank replenishment provides similar motive force
    - Treatment of tank contents with biocide to eliminate biologic growth which promotes waste production and acidifies contents of tank
    - The immersed surface provides a passive coating of fuel oil

- Visual examinations are conducted to check for leakage, structural distress or corrosion.

- Records of inspections and tests are maintained to assist in evaluating the extent of degradation of the corrosion protection systems.

The day tank supplies fuel oil to the diesel engine by gravity. Duplex basket strainers and duplex oil filters are installed in series on the fuel oil lines from the day tank to the engine.

The fuel oil day tank is located well below the insulated diesel exhaust piping and, therefore, is not exposed to any high temperature surfaces.

There is no elevated fuel oil piping adjacent to the engine. The fuel oil piping between the engine and the day tank drops down from the tank and runs along the west side at about 30” above the floor until it reaches the south end of the engine where it then drops down into the crossover trench below grade to the location where it reaches the engine. The diesel engine itself sets on a 6-inch skid and therefore is elevated above the floor.

There are no open flames in the diesel generator room.

Open flames in the diesel generator area as well as in other plant areas are controlled by plant administrative procedures.

The excess fuel from the engine is returned to the day tank. Leakage from the injection nozzles is drained by gravity to the fuel oil storage tank.

If any growth of algae should occur in the tank detection would be accomplished by either periodic sampling of the fuel oil or visual inspection of the tank interior. Should any algae be found a decision would be made at that time as to what methods of treatment would be employed to prevent future occurrences. Cleanup would be a manual operation. Should any algae occur and get into the fuel oil system, the system strainers and filters would remove it before it entered the diesel engine.

9.5.4.2.2 Component Description

Codes and standards applicable to the EDEFSTS are listed in Tables 3.2-1 and 9.5.4-1. The EDEFSTS is designed and constructed in accordance with quality group C and Seismic Category I.

a. Emergency Fuel Oil Storage Tanks

Two cylindrical emergency fuel oil storage tanks, one for each diesel engine, are provided. The tanks are horizontal and have elliptical heads.

The tanks are buried underground near the diesel generator building. The capacity of each tank is based on the fuel consumption by one diesel engine for operation at continuous rating for 7 days. The tank is vented, via a flame arrester, to the atmosphere outside the diesel building at a location above all the tank connections.

The fuel oil storage tank fill and vent lines terminate outside of the diesel generator building; however, they are routed underground from the tank to the building and from the building to the outside. The vent line has a flame arrestor, which is goosenecked downward. The bottom of the flame arrestor is approximately 15 feet above grade. The fill connection is capped and penetrates the building wall at approximately 3 feet above grade.

The maximum probable flood level does not exceed grade and, therefore, the vent and fill connections are not subject to flood conditions.

As noted, the fill connection is capped and the vent goosenecked down and, therefore, neither allow the entrance of water into the system during adverse environmental conditions.

A concrete vault is provided on top of each tank to permit access to the manhole, the pump, the pump discharge piping and conduits, level transmitters, and sample line.

The storage tanks have integral sumps. Each tank is sloped to the sump. Sample lines extend from the sumps to the vaults for periodic bottom sampling and water draw-off. The sample lines can be used to empty the storage tanks when the fuel oil level falls below the transfer pump suction.

An additional 6 inch sample line is provided to enable multiple level samples to be taken and to verify the fuel oil level manually.

The storage tanks are buried below grade at a sufficient depth to prevent floating when the tanks are emptied. Fill lines are installed above the probable maximum flood level to prevent any entry of water into the tank.

The exterior surfaces of the tanks are coated with Bitumastic. An impressed-current-type cathodic protection is provided for the tanks.

b. Emergency Fuel Oil Transfer Pumps

Two transfer pumps are provided, one for each diesel generator. The pumps are the horizontal centrifugal type and are submerged in their respective fuel oil storage tanks. Each pump motor is powered from the same Class IE bus its associated diesel generator serves. The capacity of each transfer pump is approximately twice the consumption rate of the diesel engine at its continuous rating.

c. Emergency Fuel Oil Day Tanks

Two cylindrical day tanks are provided, one for each diesel engine. The day tanks are horizontal and have ASME (torispherical) heads. Each day tank is installed in the room of the engine it serves, and the tank elevation ensures adequate net positive suction head on the diesel engine-driven fuel oil pump at all times. Each day tank has a capacity equal to approximately 80 minutes of operation of the diesel engine at its continuous rating. The tanks are vented, via a flame arrester, to outside the diesel generator building. The overflow and drain connections on the day tank are piped to the emergency fuel oil storage tank. A sampling connection is provided to the bottom of the tank for periodic sampling of the fuel oil for quality and for drawing off any accumulated condensation and sediment.

The interiors of the day tanks are waterproofed with a coating of bitumastic.

Instrumentation is provided, as described in Section 9.5.4.5. The level settings ensure that there is at least a 1-hour supply of oil in each day tank for the diesel engine (based on fuel consumption at a load of 100% of the engine continuous rating plus a minimum margin of 10%) at the level where the oil is automatically added to the day tanks by the transfer pumps in the storage tanks.

Fuel oil storage tank low level and low-low level, fuel oil system strainer high pressure differential, and day tank low level, high level, and low stand pipe level are alarmed directly in the control room.

The level of fuel oil in the day tank is indicated in the control room.

The diesel engine basket strainer high pressure differential alarm, fuel filter high differential pressure alarm, and low fuel oil pressure alarm all result in a control room "diesel trouble" light and alarm. An operator would go to the alarm panel in the diesel generator room to determine the specific alarm.

None of the above malfunctions result in harmful effects to the diesel engine, and none result in the tripping of the diesel engine. Station operating procedures give the operators guidance for responding to these alarms.

d. Piping and Valves

All piping in the EDEFSTS is carbon steel. The exterior surfaces of the underground piping are coated with coal tar and wrapped. Cathodic protection is provided for underground piping.

9.5.4.2.3 System Operation

Each diesel engine has its own independent fuel oil pumping train from the fuel oil storage tank to the day tank, with tie lines normally isolated between the two flow paths. Level transmitters installed on the day tanks initiate the signals to start the transfer pumps on low level and stop the pumps on a high level. If the diesel generators are running, the transfer pumps will run continuously.

A fire detection signal from the diesel building stops the fuel oil transfer pump. However, the fuel oil pump will not be stopped if the diesel generator is running to preclude any spurious trips from the fire protection system under accident conditions.

Fuel oil is supplied by gravity to the diesel engine-driven fuel oil pumps.

The storage tanks are replenished by delivery trucks through the oil fill connections located above grade. Accumulated moisture may be withdrawn prior to adding new fuel oil through the sample nozzle to minimize the possibility of degrading the overall quality of the new fuel. The strainers and filters in the system will ensure that any sediment stirred up during replenishment does not reach the injection nozzles. Refer to Section 9.5.4.2.1 for additional discussion of methods used to prevent degrading overall fuel quality during tank fill operations.

Based on availability, there are numerous suppliers that could deliver to WCGS within a few hours of contact.

Company	Location	Approximate Distance (Miles)
Mobil Oil	Kansas City, MO	105
Security Oil	Wichita, KS	130

There are multiple access routes to WCGS. WCGS is sited above PMF levels and it is anticipated that not all access routes to WCGS would be blocked for an extended period of time and fuel oil can be delivered as needed.

9.5.4.3 Safety Evaluation

Safety evaluations are numbered to correspond to safety design bases in Section 9.5.4.1.

SAFETY EVALUATION ONE - With the exception of the fill and vent connections, the above-ground portions of the EDEFSTS are located inside the diesel generator building. This building is designed to withstand the effects of earthquakes, tornadoes, hurricanes, floods, external missiles, and other natural phenomena. Sections 3.3, 3.4, 3.5, 3.7(B), and 3.8 provide the bases for the adequacy of the structural design of this building. The underground portions of the EDEFSTS have adequate earth coverage for missile protection. The access vaults for the storage tanks are missile protected. The missile covers and vaults form watertight barriers to prevent water entry into the tanks from ground water and flooding.

SAFETY EVALUATION TWO - The safety-related portions of the EDEFSTS are designed to remain functional after a safe shutdown earthquake. Sections 3.7(B).2 and 3.9(B) provide the design loading conditions that were considered. Sections 3.5, 3.6, and 9.5.1 provide the hazards analyses to assure that a safe shutdown, as outlined in Section 7.4, can be achieved and maintained.

SAFETY EVALUATION THREE - The design of the EDEFSTS provides complete redundancy; therefore no single failure will compromise the system's safety functions. All vital power can be supplied from either onsite or offsite power systems, as described in Chapter 8.0.

In the event that one of the oil storage tanks must be replenished without interruption of the associated diesel generator operation, accumulated moisture may be withdrawn prior to adding new fuel oil by the normal procedure (i.e. through the sample nozzle) to minimize the possibility of degrading the overall quality of the new fuel. Refer to Section 9.5.4.2.1 for additional discussion of methods used to prevent degrading overall fuel quality during tank fill operations.

SAFETY EVALUATION FOUR - The EDEFSTS is initially tested with the program given in Chapter 14.0. Periodic inservice functional testing is done in accordance with Section 9.5.4.4.

Section 6.6 provides the ASME Boiler and Pressure Vessel Code, Section XI requirements that are appropriate for the EDEFSTS.

SAFETY EVALUATION FIVE - Section 3.2 delineates the quality group classification and seismic category applicable to the safety-related portion of this system. Table 9.5.4-1 shows that the components meet the design and fabrication codes given in Section 3.2. All the power supplies and control functions necessary for safe function of the EDEFSTS are Class IE, as described in Chapters 7.0 and 8.0.

SAFETY EVALUATION SIX - The capacity of each emergency fuel oil storage tank is sufficient for 7 days of operation of one diesel generator at its continuous rating. Within this period, additional fuel can be delivered to the plant site by truck or rail.

SAFETY EVALUATION SEVEN - Maintenance of the fuel oil temperature is achieved by enclosing the equipment in heated buildings for portions of the system above ground or by burial below the frostline of underground portions of the system. Plant procedures assure that the "cloud point" of the fuel oil is lower than the lowest expected temperature in the vaults over the storage tanks.

9.5.4.4 Tests and Inspections

Preoperational testing is described in Chapter 14.0.

The EDEFSTS is tested periodically, along with the complete diesel generator system. This test demonstrates system performance and structural and leaktight integrity of accessible system components.

With the exception of underground portions of the system, all equipment and components are readily available for inspection and maintenance. Provisions are made to pressure test the underground portions of the system. The fuel oil transfer pumps can be tested independently of the diesel generator by draining the day tanks (manually to the storage tanks) to the levels that automatically start the pumps. The pump flowrate can be verified by monitoring the day tank level indicators and/or observing flow indicators. Level annunciators in the storage tanks can be used to verify the leaktightness of the tanks.

The fuel oil in the storage tank and day tanks is periodically sampled to verify quality. Degenerated fuel oil can be pumped out of the storage tanks by truck connections provided on the discharge of each fuel oil transfer pump. Accumulated moisture may be removed periodically, via the sample line, to minimize degradation of the fuel oil. Refer to Section 9.5.4.2.1 for a discussion of methods used to prevent the accumulation of moisture and sediment in the storage tanks.

9.5.4.5 Instrumentation Applications

The EDEFSTS instrumentation is designed to provide indication of system parameters and automatic operation of the transfer pumps.

The emergency fuel oil storage tanks have level transmitters to alarm in the control room on low level (corresponding to 7-day capacity) and a low-low level to indicate low suction head for the transfer pumps. A local outdoor level indicator is also provided.

The day tanks have level transmitters to automatically start and stop the transfer pumps. In addition, control room annunciation of high level and low levels is provided to indicate system malfunction. The low level alarm is provided to allow sufficient time for plant staff to accomplish minor repairs if required, before all fuel in the day tank is consumed. Day tank level indicators are provided in the local diesel engine control panels and in the main control room.

The strainers and filters installed in the system have pressure differential switches and pressure differential indicators. High differential pressure across the strainer in the transfer pump discharge is alarmed in the control room, whereas a high differential pressure across the strainers and filters on the diesel engine skid is annunciated on the local control panel. Low fuel oil pressure downstream of the diesel engine-driven pump is annunciated in the local control panel. A common alarm is provided in the control room for any local annunciator.

Test connections are provided on the fuel oil transfer pump discharge lines to monitor the pressure or temperature, if desired.

Table 9.5.4-2 summarizes the EDEFSTS alarms and indicators of various system parameters.

9.5.5 EMERGENCY DIESEL ENGINE COOLING WATER SYSTEM

The emergency diesel engine cooling water system (EDECWS) provides cooling water to the emergency diesel engines. This is a closed cycle system, and serves as an intermediate system between the diesel engines and the essential service water system.

9.5.5.1 Design Bases

9.5.5.1.1 Safety Design Bases

The EDECWS is safety related and is required to function following a DBA and to achieve and maintain the plant in a safe shutdown condition.

SAFETY DESIGN BASIS ONE - The EDECWS is protected from the effects of natural phenomena, such as earthquakes, tornadoes, hurricanes, floods, and external missiles (GDC-2).

SAFETY DESIGN BASIS TWO - The EDECWS remains functional after a SSE and performs its intended function following the postulated hazards of fire, internal missiles, or pipe break (GDC-3 and 4).

SAFETY DESIGN BASIS THREE - Safety functions can be performed, assuming a single active component failure coincident with the loss of offsite power (GDC-44).

SAFETY DESIGN BASIS FOUR - The active components are capable of being tested during plant operation. Provisions are made to allow for inservice inspection of components at appropriate times specified in the ASME Boiler and Pressure Vessel Code, Section XI (GDC-45 and 46).

SAFETY DESIGN BASIS FIVE - The EDECWS is designed and fabricated to codes consistent with the group classification assigned by Regulatory Guide 1.26 and the seismic category assigned by Regulatory Guide 1.29. The power supply and control functions are in accordance with Regulatory Guide 1.32.

SAFETY DESIGN BASIS SIX - The EDECWS is designed to remove heat from the diesel engines to permit their operation at continuous nameplate rating.

SAFETY DESIGN BASIS SEVEN - The EDECWS is designed to maintain the diesel engine in a hot standby condition to ensure quick starting of the diesel engine.

9.5.5.1.2 Power Generation Design Bases

The EDECWS has no power generation design bases.

9.5.5.2 System Description

9.5.5.2.1 General Description

The EDECWS is shown schematically in Figure 9.5.5-1. Each diesel engine has its own cooling water system. Each cooling water system consists of a jacket cooling water system and an intercooler cooling system.

The EDECWS rejects heat to the essential service water system.

Each jacket cooling water system consists of an engine-driven pump, a jacket water heat exchanger, an electric motor-driven keep-warm pump, an electric keep-warm heater, piping, valves, controls, and instrumentation. The engine-driven pump circulates water through the cylinder jackets and the jacket water heat exchanger, where the extracted heat is transferred to the essential service water system. When on standby status, the electric motor-driven pump circulates water through the electric heater and the engine cylinder jackets to keep the engine warm.

Each intercooler cooling system consists of an engine-driven intercooler pump, intercooler heat exchanger, piping, valves, controls, and instrumentation. The engine-driven intercooler pump circulates water through the intercooler heat exchanger and the engine-mounted intercoolers. Turbocharged air is cooled by the intercoolers prior to its entry into the combustion air manifold, and the extracted heat is transferred to the essential service water system at the intercooler heat exchanger.

An expansion tank is provided to accommodate any volumetric changes in the EDECWS due to thermal transients or leakage and to absorb pump pulsations. The expansion tank maintains adequate suction at the engine-driven pumps and provides a release point for undissolved gases in the system.

The jacket water and intercooler cooling systems have high point vents which are piped to the jacket water expansion tank. This ensures that the systems are filled with water at all times.

9.5.5.2.2 Component Description

Codes and standards applicable to the EDECWS are listed in Tables 3.2-1 and 9.5.5-1. The safety-related portions of the EDECWS are designed and constructed in accordance the quality groups listed in Table 3.2-1 and seismic Category I.

ENGINE-DRIVEN COOLING WATER PUMPS - The jacket cooling water pump and the intercooler pump are driven by the engine. The pumps are the horizontal centrifugal type. Adequate suction is provided by the jacket water expansion tank. A failure of either of these pumps constitutes an engine failure.

HEAT EXCHANGERS - The heat exchangers in the EDECWS are the horizontal shell and tube type. Essential service water is supplied to the tube side. The heat exchangers are arranged in series so that the essential service water first flows through the intercooler heat exchanger and then the jacket water heat exchanger. Heat exchanger is based on maximum heat rejection requirements and a specified 0.002 fouling factor for the lube oil cooler and jacket water heat exchangers, a specified fouling factor of 0.0019 for the intercooler heat exchanger, and 95°F entering water temperature. Because these design conditions are inherently conservative, the diesel engine cooling system contains a suitable margin for operation under all design conditions.

EXPANSION TANK - One expansion tank is provided in the EDECWS to accommodate volumetric changes in the jacket cooling water and intercooler cooling water systems due to thermal transients or leakage. The expansion tank serves to absorb any pump

pulsations. The tank is a horizontal cylindrical type and is located at a suitable elevation to provide adequate suction head to the engine-driven pumps.

The makeup to the expansion tank is from the demineralized water storage and transfer system which is nonseismic Category I. The makeup quantities are controlled automatically by level switches. The capacity of the expansion tank is based on providing sufficient reserve capacity for operation of the diesel at continuous rating for at least 7 days. Provisions are included for the addition of chemicals, as required.

JACKET COOLING WATER KEEPWARM PUMP AND HEATER - An electric motor-driven keepwarm pump is provided to circulate water to the cylinder liners through an electric heater to keep the engine warm on standby. The pump and heater combination on each diesel skid is powered from the same Class IE bus served by their associated diesel generator.

PIPING AND VALVES - All piping in the EDECWS is carbon steel. The inlets to the heat exchangers are controlled by self-contained thermostatic valves. Section 9.2.1 describes the piping and valves associated with the essential service water system. Due to the manufacturer's service and design experience, the flex connections used within the EDECWS are of the nonmetallic type, are designed and constructed to manufacturer's standards, and have proven reliable for the intended service.

9.5.5.2.3 System Operation

GENERAL - The jacket cooling water system and the intercooler cooling water system are closed-cycle systems. High points in these systems are vented to the expansion tank. This assures that all spaces are filled with water when a water inventory is maintained in the expansion tank. The EDECWS uses demineralized water with a suitable corrosion inhibitor. The demineralized water chemistry meets EPRI Closed Cooling Water Guidelines, which exceeds the manufacturer’s recommendations.

When the engine is on standby, the jacket water keepwarm pump circulates water through the electric heater and the cylinder jacket. This keeps the engine warm to facilitate starting. The heater is controlled by a temperature switch. A failure of the keepwarm system will lower the jacket cooling water temperature. As described in Section 8.3, low jacket cooling water temperature will be alarmed locally and annunciated in the control room as a common trouble alarm.

During diesel engine operation, the keepwarm system is automatically shut off. The engine-driven jacket cooling water pump and the intercooler cooling water pump circulate cooling water. The heat extracted by the cooling water is transferred to the essential service water system at the jacket water and intercooler heat exchangers. The cooling water to each heat exchanger is modulated by a self-contained thermostatic valve, so that the temperature differentials across the engine in the jacket cooling water and the intercooler cooling systems remain at the design minimum. The thermostatic valves bypass the heat exchangers when the engine is started so that the cooling water is rapidly brought to normal operating temperatures. The thermostatic valves are designed to permit the full volume of cooling water to flow through the engine. The expansion tank makes up for any volumetric changes due to thermal transients and minor leakage.

The WCGS engine cooling water characteristics have been reviewed and accepted by the diesel manufacturer. A corrosion inhibitor is used in the diesel generator cooling water system. The manufacturer includes in his instruction manual cooling water treatment guidelines and recommends the use of a corrosion inhibitor.

Treatment of the essential service water system that serves the cooling water heat exchanger is described in Section 9.2.

During normal plant operation, the service water system through the essential service water system piping provides a heat sink to the EDECWS. When the diesel is started during an emergency on a safety injection signal, the essential service water system absorbs the heat from the EDECWS. However, the essential service water pumps do not activate immediately because they are connected to power from the diesel generators. The normal period of diesel engine operation prior to the start of the essential service water flow is less than a minute. This includes the diesel generator start and acceleration to its rated speed, energizing the sequencer for starting the essential service water pump motor, and starting and accelerating the essential service water pump motor to rated conditions. The diesel engines are designed to operate at a continuous nameplate rating without a cooling water supply for 3 minutes.

Loss of water from the EDECWS is detected by monitoring both the operation of the D-G room sump pump and the number of times makeup water is introduced into the system by monitoring the operation of the makeup water solenoid valve.

There are no mechanical limitations within the EDECWS that would restrict the operation of the diesel generator when less than full electrical power generation is required.

9.5.5.3 Safety Evaluation

Safety evaluations are numbered to correspond to the safety design bases.

SAFETY EVALUATION ONE - The EDECWS is located in the diesel generators building. This building is designed to withstand the effects of earthquakes, tornadoes, hurricanes, floods, external missiles, and other appropriate natural phenomena. Sections 3.3, 3.4, 3.5, 3.7(B), and 3.8 provide the bases for the adequacy of the structural design of this building.

SAFETY EVALUATION TWO - The safety-related portions of the EDECWS are designed to remain functional after a safe shutdown earthquake. Sections 3.7(B).2 and 3.9(B) provide the design loading conditions that were considered. Sections 3.5, 3.6, and 9.5.1 provide the hazards analyses to assure that a safe shutdown, as outlined in Section 7.4, can be achieved and maintained.

SAFETY EVALUATION THREE - The design of the emergency diesel generators provides for complete redundancy; therefore no single failure of the EDECWS portion compromises the diesel generators safety functions. Vital power can be supplied from either onsite or offsite power systems, as described in Chapter 8.0. There are no interconnections between the two engine cooling systems. Therefore, no failure of or between any of the engine cooling subsystems would result in any degradation of the other diesel engine.

SAFETY EVALUATION FOUR - The EDECWS is initially tested with the program given in Chapter 14.0. Periodic inservice functional testing is carried out in accordance with Section 9.5.5.4.

Section 6.6 provides the ASME Boiler and Pressure Vessel Code, Section XI requirements that are appropriate for the EDECWS.

SAFETY EVALUATION FIVE - Section 3.2 delineates the quality group classification and seismic category applicable to the safety-related portion of this system and supporting system. Table 9.5.5-1 shows that the components meet the design and fabrication codes given in Section 3.2. All the power supplies and control functions necessary for the safe function of the EDECWS are Class IE, as described in Chapters 7.0 and 8.0.

SAFETY EVALUATION SIX - The EDECWS components are sized to remove heat from the engine when operating at continuous nameplate rating and transfer this heat to the essential service water system.

SAFETY EVALUATION SEVEN - The EDECWS has a jacket water keepwarm system designed to keep the engine in hot standby. This allows the quick start and loadings required for emergencies.

9.5.5.4 Tests and Inspections

Preoperational testing is described in Chapter 14.0.

The EDECWS is tested periodically, along with the complete diesel generator system. This test demonstrates the performance, structural, and leaktight integrity of all the system components.

The safety-related portions of the EDECWS are designed and arranged (to the extent practical) to permit preservice and inservice inspection.

9.5.5.5 Instrumentation Applications

The EDECWS instrumentation is designed to permit automatic operation and remote control of the system and to provide continuous indication of system parameters. Refer to Section 8.3 for details of instrumentation. The local control panel has indicators for coolant pressure and coolant inlet and outlet temperatures. The frequency of makeup to the expansion tank is monitored by the data logger printout of the opening of the makeup water valve.

All applicable instrument controls, sensors, and alarms for the diesel cooling water system are shown on Figure 9.5.5-1, Sheets 1 and 2.

Those temperatures and pressures which are alarmed in the diesel generator room but result only in the general control room "diesel trouble" alarm are high jacket water temperature from the engine, low jacket water temperature from the engine, low jacket water pump discharge pressure, low jacket water expansion tank level, high intercooler water temperature from the engine, low intercooler water temperature from the engine, and low intercooler pump discharge pressure. An operator would go to the alarm panel in the diesel generator room to determine the specific alarm.

There are no cooling water system alarms which alarm directly in the control room.

Local indication in the diesel generator room is provided for jacket water temperature to and from the engine, intercooler water temperature to and from the engine, water temperature from the generator outboard bearing, jacket water pump discharge pressure, and intercooler pump discharge pressure.

None of the above malfunctions which alarm in the control room result in harmful effects to the diesel or shutdown, except for the high jacket water temperature from the engine. High jacket water temperature is sensed by four separately mounted temperature switches which have three discrete temperature setpoints, two of the four sensors are at the highest of the three temperature setpoints. Operation of any one switch sounds an alarm, and operation of any two (one of which must be at the highest temperature setpoint) results in engine shutdown.

Station operating procedures give the operators guidance for responding to these alarms.

9.5.6 EMERGENCY DIESEL ENGINE STARTING SYSTEM

The emergency diesel engine starting system (EDESS) provides a reliable method for starting the emergency diesel engines for all modes of operation.

The EDESS is divided into two parts -- a safety-related portion which is that portion downstream of and including the air start tank check valve and the remainder of the system which is nonsafety-related.

9.5.6.1 Design Bases

9.5.6.1.1 Safety Design Bases

The safety-related portion of the EDESS is required to function following a DBA and to achieve and maintain the plant in a safe shutdown condition.

SAFETY DESIGN BASIS ONE - The EDESS is protected from the effects of natural phenomena, such as earthquakes, tornadoes, hurricanes, floods, and external missiles (GDC-2).

SAFETY DESIGN BASIS TWO - The safety-related portion of the EDESS remains functional after a SSE and performs its intended function following the postulated hazards of fire, internal missiles, or pipe break.

SAFETY DESIGN BASIS THREE - Safety functions can be performed, assuming a single active component failure coincident with the loss of offsite power (GDC-44).

SAFETY DESIGN BASIS FOUR - The active components are capable of being tested during plant operation. Provisions are made to allow for inservice inspection of components at appropriate times specified in the ASME Boiler and Pressure Vessel Code, Section XI (GDC-45 and 46).

SAFETY DESIGN BASIS FIVE - The safety-related portion of EDESS is designed and fabricated to codes consistent with the quality group classification assigned by Regulatory Guide 1.26 and the seismic category assigned by Regulatory Guide 1.29. The power supply and control functions are in accordance with Regulatory Guide 1.32.

SAFETY DESIGN BASIS SIX - The capability to isolate components, systems, or piping is provided, when required, so that the system's safety function is not compromised. This includes isolation of components to deal with leakage or malfunctions and to isolate nonsafety-related portions of the system.

SAFETY DESIGN BASIS SEVEN - The safety-related portion of the EDESS is capable of storing sufficient air to allow for at least five consecutive crank cycles of approximately 3 seconds or 2 to 3 revolutions of the diesel engine without external support or assistance.

9.5.6.1.2 Power Generation Design Basis

The EDESS serves no power generation function.

9.5.6.2 System Description

9.5.6.2.1 General Description

The EDESS is shown schematically in Figure 9.5.6-1. Each diesel engine has its own starting system. The starting system for each diesel engine has two redundant, independent starting air trains, one for each bank of cylinders. Each starting air train consists of a compressor, dryer, starting air tank, filters, strainers, piping, valves, controls, and instruments. Each bank of engine cylinders has its own engine-driven air start distributor with a pilot air connection to each cylinder for operation of the cylinder air start valves. The engine starts on either or both banks of cylinders.

The WCGS emergency diesel generator is started by using air admitted directly to the cylinder through an air start distributor. The air is stored in two separate reservoirs, which are charged from two separate compressors. Dryness of the air is assured by the use of an air dryer on each compressor.

The air dryers are of the automatic recharging type, using purge flow to effect re-charge of the membrane. They are designed to provide air dried to a dew point of -40 degrees F at the design flow rate of 50scfm, which is well below the lowest design room temperature of 60 degrees F (See Note 8 of Table 3.11(B)-1 for clarification).

Oil carryover from the compressor is controlled by use of a prefilter upstream of the dryer.

Starting air pressure is also used to operate the governor servorack booster which opens the fuel injection pump racks to ensure adequate fuel at startup.

For emergency shutdown, starting air pressure is used to operate a fuel rack shutdown cylinder to close the fuel racks.

The pressure transmitters associated with the pressure indicators on the local control panel are supplied with air from the starting air system.

9.5.6.2.2 Component Description

Codes and standards applicable to the EDESS are listed in Tables 3.2-1 and 9.5.6-1. The safety-related portion of the EDESS is designed and constructed in accordance with the quality groups listed in Table 3.2-1 and seismic Category I.

COMPRESSORS - Each train of the diesel starting system has an electric motor-driven compressor. The compressor is a 3-stage air-cooled design with sufficient capacity to charge its associated air tank from minimum to maximum starting air pressure in less than 30 minutes. The compressor start/stop functions are automatically controlled by a pressure switch monitoring the starting air tank pressure. The compressor is nonsafety related, and the compressor motor is powered from a non-IE source.

Each compressor has air cooled intercoolers and an aftercooler on the compressor itself to cool the compressed air.

DRYERS - A membrane air dryer is provided in each starting air train. The dryer is the automatic regeneration type and includes a prefilter. The dryer provides moisture-free air with a dew point temperature (at rated pressure) of minus 40 F. The dryer package is nonsafety-related.

STARTING AIR TANKS - Compressed air is stored in the starting air tanks. Two starting air tanks are provided for each emergency diesel engine - one for each redundant starting air train. Each tank has sufficient capacity for five cranking cycles without recharging. The air tanks are equipped with safety valves and normally closed drains to blow down any accumulated moisture and sediments periodically. The starting air tank is safety-related.

STRAINERS AND FILTERS - Each compressor inlet is fitted with a filter. A prefilter is installed in each dryer package. This assures that the dryer efficiency is maintained and that moisture-free clean air is supplied to the starting air tanks. A wye strainer with a 740-micron particle retention capability is provided downstream of each starting air tank. In addition, a wye strainer with a 149-micron particle retention capability is provided upstream of each air start solenoid valve in each starting air train. The strainers minimize the possibility of a malfunction of the components in the starting air system by particle entrapment.

PIPING AND VALVES - Carbon steel piping and valves are installed in the EDESS. The dryers provide moisture-free air. Manual drains are provided in the starting air tanks to blow down periodically any accumulated moisture. Therefore, rust formation in the carbon steel piping and valves is minimized. The strainers provide an additional safeguard against carryover of any rust particles to the starting air system components.

9.5.6.2.3 System Operation

Upon initiation of the diesel engine start sequence, the air start solenoid valves in the redundant starting air trains open to release sufficient air from the starting air tanks to the engine-mounted air start valves and the engine-driven air start distributors located on both banks of the engine cylinders. The air pressure operates the governor servorack booster to open the fuel racks to ensure adequate fuel during starting. The engine can be started from either or both banks of cylinders. The engine is maintained in a hot standby condition to facilitate quick start. The engine start and acceleration to synchronous speed at rated voltage and frequency is accomplished within 12 seconds. An engine start failure is annunciated in the control room (see Section 8.3).

The starting air tanks are automatically charged by the compressors. Pressure switches are installed in each starting air train, at the starting air tanks. These switches start and stop both compressors to maintain the required pressure in the tanks. An interconnecting pipe with a normally closed valve is provided between the two starting air trains, upstream of the starting air tanks, administratively controlled so that either of the two compressors can charge both starting air tanks. Low starting air pressure is annunciated in the local panel and in the control room (see Section 8.3). Safety relief valves are installed on each tank and compressor for overpressurization protection.

A barring gear interlock is provided in each starting air train to prevent the starting of the diesel engine when the barring gear is engaged. Engagement of the barring gear is annunciated in the local panel and in the control room.

Adequate isolation capabilities are provided in the EDESS to isolate the nonsafety-related portions of the system from the safety-related portion. The inlet piping to the starting air tanks has nonreturn valves and manual valves to isolate the tanks from the compressor circuit. Excess flow valves are installed in the air supply line to the various pressure transmitters on the engine skid.

9.5.6.3 Safety Evaluation

Safety evaluations are numbered to correspond to the safety design bases.

SAFETY EVALUATION ONE - The safety-related portion of the EDESS is located in the diesel generators building. This building is designed to withstand the effects of earthquakes, tornadoes, hurricanes, floods, external missiles, and other appropriate natural phenomena. Sections 3.3, 3.4, 3.5, 3.7(B), and 3.8 provide the bases for the adequacy of the structural design of these buildings.

SAFETY EVALUATION TWO - The safety-related portion of the EDESS is designed to remain functional after a safe shutdown earthquake. Sections 3.7(B).2 and 3.9(B) provide the design loading conditions that were considered. Sections 3.5, 3.6, and 9.5.1 provide the hazards analyses to assure that a safe shutdown, as outlined in Section 7.4, can be achieved and maintained.

SAFETY EVALUATION THREE - The design of the emergency diesel generators provides for complete redundancy; therefore single failure of the EDESS portion does not compromise the diesel generators safety function. All vital power can be supplied from either onsite or offsite power systems, as described in Chapter 8.0.

SAFETY EVALUATION FOUR - The EDESS was initially tested with the program given in Chapter 14.0. Periodic inservice functional testing is carried out in accordance with Section 9.5.6.4.

Section 6.6 provides the ASME Boiler and Pressure Vessel Code, Section XI requirements that are appropriate for the EDESS.

SAFETY EVALUATION FIVE - Section 3.2 delineates the quality group classification and seismic category applicable to the safety-related portion of this system and supporting systems. Table 9.5.6-1 shows that the components meet the design and fabrication codes given in Section 8.2. All the power supplies and control functions necessary for safe function of the EDESS are Class IE, as described in Chapters 7.0 and 8.0.

SAFETY EVALUATION SIX - Section 9.5.6.2 describes provisions made to identify and isolate leakage or malfunction and to assure isolation of the nonsafety-related portions of the system.

SAFETY EVALUATION SEVEN - The redundant starting air trains in the engine starting system have independent starting air tanks. Each tank has a sufficient capacity to provide at least five diesel engine crank cycles without external support or assistance. The duration of each crank cycle is 3 seconds or a minimum of 2 shaft revolutions.

9.5.6.4 Tests and Inspections

Preoperational testing is described in Chapter 14.0.

The EDESS is tested periodically, along with the complete diesel generator system. This test demonstrates the performance, structural, and leaktight integrity of all the system components. When the engine is on standby, the starting air system is normally pressurized up to the air start solenoid valves. Instrumentation is provided to indicate and alarm loss of air pressure. This provides an additional means of verification of the structural and leaktight integrity of the system when the engine is on standby.

The safety-related portions of the EDESS are designed and located (to the extent practicable) to permit preservice and inservice inspections.

9.5.6.5 Instrumentation Applications

The EDESS instrumentation is designed to facilitate automatic operation of the system and to provide continuous indication of system parameters. Refer to Section 8.3 for details of instrumentation. Local pressure indicators are provided on the starting air tanks. Pressure indicators are also installed in the local control panel for each starting air train.

All applicable instruments, controls, sensors, and alarms for the diesel starting air system are shown on Figure 9.5.6-1, Sheets 1 and 2.

The only system function which is alarmed in the diesel generator room is low air system pressure. This alarm also generates a general control room "diesel trouble" alarm. This malfuction does not result in any harmful effects to the diesel engine.

9.5.7 EMERGENCY DIESEL ENGINE LUBRICATION SYSTEM

The emergency diesel engine lubrication system (EDELS) provides essential lubrication and cooling for the components of the emergency diesel engine.

9.5.7.1 Design Bases

9.5.7.1.1 Safety Design Bases

The EDELS, excluding operation of the keepwarm components, is safety related and is required to function following a DBA and to achieve and maintain the plant in a safe shutdown condition.

SAFETY DESIGN BASIS ONE - The EDELS is protected from the effects of natural phenomena, such as earthquakes, tornadoes, hurricanes, floods, and external missiles (GDC-2).

SAFETY DESIGN BASIS TWO - The EDELS remains functional after a SSE and performs its intended function following the postulated hazards of fire, internal missiles, or pipe break (GDC-3 & 4).

SAFETY DESIGN BASIS THREE - Safety functions can be performed, assuming a single active component failure coincident with the loss of offsite power (GDC-44).

SAFETY DESIGN BASIS FOUR - The active components are capable of being tested during plant operation. Provisions are made to allow for the inservice inspection of components at appropriate times specified in the ASME Boiler and Pressure Vessel Code, Section XI (GDC-45 & 46).

SAFETY DESIGN BASIS FIVE - To the extent practicable, the EDELS is designed and fabricated to codes consistent with the quality group classification assigned by Regulatory Guide 1.26 and the seismic category assigned by Regulatory Guide 1.29. The power supply and control functions are in accordance with Regulatory Guide 1.32.

SAFETY DESIGN BASIS SIX - The capability to isolate components or piping is provided to deal with leakage or malfunctions (GDC-44).

SAFETY DESIGN BASIS SEVEN - The EDELS is designed to provide adequate lubrication and cooling for the various moving parts of the engine to permit it to be operated at continuous nameplate rating for at least 7 days without replenishing the system.

SAFETY DESIGN BASIS EIGHT - The EDELS is designed to maintain the lubricating oil in a warm condition when the engine is on standby to facilitate quick starting, when required.

9.5.7.1.2 Power Generation Design Basis

The EDELS has no power generation design basis.

9.5.7.2 System Description

9.5.7.2.1 General Description

The EDELS is shown schematically in Figure 9.5.7-1. Each diesel engine is furnished with an independent lubrication system. The EDELS consists of two separate systems - the main oil system and the rocker oil system.

The main oil system supplies lubricating oil to the main bearings, pistons, camshaft bearings, cam followers, fuel injection pumps, camshaft, and accessory drive gears. The system consists of an engine-driven main oil pump, oil cooler, electric motor-driven prelube/keepwarm pump, keep-warm electric heater, auxiliary lubricating oil makeup tank, bypass filter, duplex full-flow strainer, piping, valves, controls, and instrumentation.

During engine operation, the engine-driven pump draws oil from the engine sump and delivers it through the oil cooler and strainer to the main engine oil header. The header supplies oil under pressure to lubricate and cool various components. After lubrication, the oil flows back to the sump through a return header.

The capacity of the engine oil sump provides a sufficient volume of oil such that the emergency diesel engine and generator can operate at nameplate continuous rating for at least 7 days without replenishing the oil in the sump. The design specification lube oil consumption at continuous load rating is approximately 60 gallons per day. The engine sump is considered empty at 300 gallons. At the dipstick full mark the sump contains 1200 gallons. This provides 900 gallons of consumable oil, which calculates to 15 days of operation at rated load consuming 60 gallons per day. The low level alarm has a set point corresponding to 963 gallon in the sump (663 consumable, 11 days consuming 60 gallons per day). At the dipstick add oil mark there is 948 gallons in the sump (648 consumable, 10.8 days consuming 60 gallons per day). The engine is also equipped with an automatic oil makeup system. It has set points to add lube oil when the sump reaches 1063 gallons and stops adding when the sump oil reaches 1143 gallons. The lube oil makeup system has an auxiliary tank holding up to 260 gallons of lube oil and can add up to an additional 4 days (at 60 gallons per day consumption) to that provided by the sump alone.

On an engine standby status, the electric prelube/keepwarm pump draws oil from the engine sump and delivers it through an electric heater, filter, and strainer to the main engine lubricating oil header. The keepwarm system thus serves the following functions:

a. Maintains the oil in the sump in a warm condition to facilitate a quick start.

b. Prelubricates the essential engine components to minimize the possibility of oil starvation.

c. Maintains oil purity by continuous filtration and straining.

The prelube/keepwarm pump operates when the engine is running in order to provide a path for the bypass filtration of the oil in the sump.

To protect the crankcase oil from contamination by cooling water and fuel leaks at the cylinder head upper deck level, the valve rockers are lubricated and drained by a separate rocker lubricating oil system. The system consists of an engine-driven pump, strainer, reservoir electric motor-driven prelube pump, piping, valves controls and instrumentation. The engine driven pump draws oil from an engine-mounted reservoir and discharges it under pressure through a strainer to a header. The header feeds lubricating oil to each cylinder head rocker assembly. A drain header returns the oil to the reservoir. The electric motor-driven prelube pump serves as a backup to the engine-driven pump. When the engine is on standby, the prelube pump is used to lubricate the rocker arm assembly periodically in accordance with the engine manufacturer's recommendations.

An auxiliary lubricating oil makeup tank, external to the engine skid, is provided for a convenient reservoir of makeup oil to the engine sump. The makeup to the sump is controlled automatically by level switches in an external level control tank which monitors level in the sump. The volume of oil in the auxiliary lubricating oil makeup tank is not necessary to meet the requirement for the engine to operate at nameplate continuous rating for at least seven days without replenishing the oil in the sump.

A crankcase vacuum system is provided to maintain a slight negative pressure in the crankcase. The negative pressure in the crankcase reduces oil leakage out of the engine. The system consists of an ejector driven by combustion air, an oil separator, piping, valves, and instrumentation. The ejector discharge is piped outside the diesel building.

Administrative procedures control the use of lubricating oils and their containers to prevent inadvertent addition of the wrong type of oils.

Maintenance procedures ensure acceptable lube oil quality through a program of analysis and actions based on these results.

9.5.7.2.2 Component Description

Codes and standards applicable to the EDELS are listed in Tables 3.2-1 and 9.5.7-1. The safety-related portions of the EDELS are designed and constructed in accordance with the quality groups listed in Table 3.2-1 and seismic Category I.

MAIN OIL PUMP - The main oil pump is driven by the engine. It is a positive displacement, rotary pump. The pump draws oil from the engine sump and delivers it under pressure to the lubricating oil system.

A suction strainer is provided in the engine sump. A relief valve is built into the pump for overpressure protection. A failure of this pump constitutes an engine failure. The pump failure is detected by low lubricating oil pressure or by a rise in the bearing temperature. See Section 8.3 for the details of instrumentation.

LUBRICATING OIL COOLER - The lubricating oil cooler is a horizontal shell and tube-type heat exchanger. The essential service water leaving the jacket water heat exchanger is circulated through the tubeside of the cooler.

AUXILIARY LUBRICATING OIL MAKEUP TANK - One lubricating oil makeup tank is provided per engine. The tank is external to the engine skid and is located in the same room it serves. This tank provides a convenient reservoir of makeup oil to the engine sump. The volume of oil in the auxiliary lubricating oil makeup tank is not necessary to meet the requirement for the engine to operate at nameplate continuous rating for at least seven days without replenishing the oil in the sump. The tank is horizontal cylindrical type. Connections are provided on the tank for manual fill, vent, overflow, drain, and level instrumentation.

KEEPWARM PUMP AND HEATER - The keepwarm pump is a positive displacement pump, driven by an electric motor. A strainer is installed in the suction piping to the pump. A relief valve is provided on the pump to prevent overpressurization. The keepwarm pump circulates oil through an electric heater, which is thermostatically controlled when the diesel engine is in stand-by. The heater is de-energized when the engine runs. The pump and the heater are powered from an IE source.

ROCKER LUBRICATING OIL PUMPS - The main rocker lubricating oil pump is engine driven. A backup electric motor-driven pump is also provided. The pumps are of the positive displacement type. In addition to the relief valves built into the pumps, a pressure regulator is provided in the system to prevent overpressurization. The backup pump motor is powered from an IE source.

STRAINERS AND FILTERS - Strainers and filters are provided in the EDELS to maintain the oil purity at a level required for satisfactory operation of the diesel and to protect the positive displacement pumps in the system. All the oil to the engine lubricating oil header is delivered through a duplex basket type strainer. The keepwarm pump circulates a portion of the oil in the engine sump continuously through a filter and delivers it to the main lubricating oil system upstream of the basket strainer. The rocker lubricating oil system has a strainer between the pump and the engine oil header.

The main lubricating oil and rocker arm lube oil strainers are a full flow, removable, basket type, duplex strainers. The strainers have a 30-micron nominal particle retention capability.

The filters are a cartridge type made of cellulose with 5-micron nominal particle retention capability. Instrumentation is provided to alarm on a high pressure differential across the filters and strainers (see Sections 8.3 and 9.5.7.5 for details).

PIPING AND VALVES - All piping in the EDELS is carbon steel. Due to the manufacturer's service and design experience the flex connections used in the EDELS are a nonmetallic type, are designed and constructed to manufacturer's standards, and have proven reliable for the intended service. The oil flow to the lube oil cooler is controlled by a self-contained thermostatic valve. The lubricating oil makeup to the engine sump is controlled automatically by a solenoid-operated valve that is actuated by the level switches in the sump.

Section 9.2.1 describes the piping and valves associated with the essential service water system.

9.5.7.2.3 System Operation

On engine standby, the keepwarm pump draws oil from the engine sump and delivers it to the engine lubricating oil header through an electric heater, a bypass filter, and the main lube oil strainer. The heater is controlled by a temperature switch. A failure in the keepwarm system will result in a lowering of the sump oil temperature. As described in Section 8.3, this condition is monitored and alarmed locally and in the control room.

During diesel engine operation, the engine-driven main oil pump draws oil from the engine sump and delivers the oil to the engine lubricating oil header through the lube oil cooler and the main lube oil strainer. The oil header supplies oil under pressure to the engine components requiring lubrication and cooling. The oil then drains back to the sump.

Essential service water is used to cool the lubricating oil at the cooler. The oil flow to the shell side of the cooler is modulated by a self-contained thermostatic valve, so that the temperature differential between the oil inlet and outlet to the engine remains at the design minimum. The thermostatic valve bypasses the cooler when the engine is started so that the lubricating oil is brought to normal operating temperature rapidly. The valve is designed to permit the full volume of oil flow through the engine.

During normal plant operation, the service water system through the essential service water system piping provides the cooling water to the cooler. When the diesel is started during an emergency, the essential service water system supplies the cooling

water to the cooler. No cooling is available for the time required to bring the essential service water pumps into service with the power from the diesel generators. As explained in Section 9.5.5.2.3, this time lag is less than a minute. The diesel engines are designed to operate at nameplate continuous rating without cooling water for 3 minutes.

The oil level in the engine sump is maintained automatically by the auxiliary makeup tank. Instrumentation that senses the level in the engine sump controls a solenoid valve installed in the inlet piping from the makeup tank. A manual bypass around the solenoid valve is also provided.

The WCGS emergency diesel generator includes an electric motor-driven prelube/keepwarm pump as an integral part of the lube oil system. This pump circulates lube oil from the engine crankcase through a keepwarm heater and a filter, then into the main lube oil system, through a strainer, and into the engine header. During engine standby, this system provides continuous prelubrication and filtering of the oil charge at keepwarm temperature. During engine operation, this system is used for continuous filtration of the oil charge. Additionally, the engine includes a separate rocker arm lubrication system.

This system includes an electric motor-driven prelubrication pump, which is manually operated and is intended to be used prior to test starts. The rocker arm prelube pump is manually started from the Engine Gauge Panel. The pump is operated once every week for a period of 5 to 30 minutes. After operating for the preset time period the pump automatically shuts off. It is not considered detrimental by the engine manufacturer for the rocker arms to operate with reduced oil pressure for the short period of time during which the engine is coming up to speed in an emergency start situation.

The rocker lube oil system is employed in all Colt-Pielstick diesel engines. This is true whether the engine is in maritime, commercial, or nuclear service. The vendor (Colt) has stated that, based on both his extensive shop testing and operational service of the Colt-Pielstick diesel engine, no cooling of the rocker lube oil is required. Additionally, since the system is not considered vital to emergency startup of the engine, a keepwarm feature is not provided. The diesel generator building is maintained at a minimum of 60 F, which is sufficient to prevent excessive cooling of the lube oil. Temporary temperature measuring instrumentation was provided on the rocker lube oil system during startup testing at Callaway Plant to confirm proper operation. Refer to SLNRC 84-0022 dated February 2, 1984.

Colt-Pielstick diesel engines are installed at two operational nuclear power plants, Virgil Summer Station 1 and Farley Unit 1.

The components discussed above are shown in USAR Figure 9.5.7-1, Sheets 1 and 2.

During engine operation, the rocker assembly is lubricated by the engine-driven rocker lubricating oil pump. The pump draws oil from a reservoir mounted on the engine and delivers this oil through a strainer to an oil header. The header distributes the oil to the rocker assembly. A return header is provided to drain the oil to the reservoir. An electric motor-driven pump is provided as a backup to the engine-driven pump. During engine standby, the backup pump is used to prelubricate the rocker assembly at regular intervals in accordance with the engine manufacturer's recommendations. The reservoir is filled with oil from the engine main oil header. A float valve is installed to control the oil level in the reservoir.

The full flow strainer and the bypass filter in the keepwarm system maintain the required oil purity. Fill connections are installed in the makeup tank and the engine sump. The system is filled, using an offskid portable pump. A temporary strainer is included in the portable pump package during filling operations. The sump can also be filled, using the fill connection provided in the keepwarm system. When this connection is used, the oil is circulated through the bypass filter and the main oil strainer by an offskid portable pump before reaching the sump. The quality of the oil in the sump and the makeup tank can be checked, if required, by withdrawing samples from various points in the system.

During engine operation, a portion of the combustion air is used to drive an ejector. The ejector is designed to maintain a negative pressure in the crankcase. An oil separator is provided to ensure that the ejector discharge is oil free. Instrumentation is provided to alarm on increasing crankcase pressure and to shut down the engine automatically when the pressure exceeds a design maximum. See Section 8.3 for the instrumentation details.

In addition, explosion relief doors are provided to safeguard against any sudden pressure surges within the crankcase. The explosion relief doors are designed to relieve the vapors from the crankcase and prevent the entry of outside air into the crankcase.

Excessive leakage in the main oil system decreases the system pressure and, as described in Section 8.3, the engine automatically shuts down. The keepwarm system can be isolated from the main oil system. Valves are provided to isolate one section of the main oil basket strainer from the other for maintenance purposes. The sump can be isolated from the makeup tank.

There are no mechanical limitations within the EDELS that would restrict the operation of the diesel engine generator when less than full electrical generation is required.

9.5.7.3 Safety Evaluation

Safety evaluations are numbered to correspond to the safety design bases in Section 9.5.7.1.

SAFETY EVALUATION ONE - The safety-related portions of the EDELS are located in the diesel generators building. This building is designed to withstand the effects of earthquakes, tornadoes, hurricanes, floods, external missiles, and other appropriate natural phenomena. Sections 3.3, 3.4, 3.5, 3.7(B), and 3.8 provide the bases for the adequacy of the structural design of this building.

SAFETY EVALUATION TWO - The safety-related portions of the EDELS remain functional after a safe shutdown earthquake. Sections 3.7(B).2 and 3.9(B) provide the design loading conditions that were considered. Sections 3.5, 3.6, and 9.5.1 provide the hazards analyses to assure that a safe shutdown, as outlined in Section 7.4, can be achieved and maintained.

SAFETY EVALUATION THREE - The design of the emergency diesel generators provides for complete redundancy; therefore a single failure of the EDELS portion does not compromise the diesel generators' safety function. All vital power can be supplied from either the onsite or offsite power systems, as described in Chapter 8.0.

SAFETY EVALUATION FOUR - The EDELS is initially tested with the program given in Chapter 14.0. Periodic inservice functional testing is done in accordance with Section 9.5.7.4.

Section 6.6 provides the ASME Boiler and Pressure Vessel Code, Section XI requirements that are appropriate for the EDELS.

SAFETY EVALUATION FIVE - Section 3.2 delineates the quality group classification and seismic category applicable to the safety-related portion of this system and supporting systems. Table 9.5.7-1 shows that the component meets the design and fabrication

codes given in Section 3.2. All the power supplies and control functions necessary for safe function of the EDELS are Class IE, as described in Chapters 7.0 and 8.0.

SAFETY EVALUATION SIX - Section 9.5.7.2 describes provisions made to isolate leakage or malfunction of the system components.

SAFETY EVALUATION SEVEN - The EDELS components provide adequate lubrication and cooling for the various moving parts of the emergency diesel engine to permit its operation at nameplate continuous rating for at least 7 days without oil replenishment from external sources.

SAFETY EVALUATION EIGHT - A keepwarm system is provided in the EDELS to maintain the lubricating oil temperature in a warm condition when the engine is on standby. This facilitates a quick engine start.

9.5.7.4 Tests and Inspections

Preoperational testing is described in Chapter 14.0.

The EDELS is tested periodically along with the complete diesel generator system. This test demonstrates the performance and structural and leaktight integrity of all the system components.

The safety-related portions of the EDELS are designed and located (to the extent practicable) to permit preservice and inservice inspection.

9.5.7.5 Instrumentation Applications

The EDELS instrumentation is designed to permit automatic operation and to provide continuous indication of the system parameters. Refer to Section 8.3 for a list of annunciators and engine trip functions associated with the EDELS.

All appropriate instruments, controls, sensors, and alarms for the diesel engine lube oil system are shown on USAR Figure 9.5.7-1, Sheets 1 and 2.

Those lube oil temperatures, pressures, and levels which alarm locally and result in a control room "diesel trouble" light and alarm are high lube oil temperature from engine, high lube oil strainer differential pressure, low lube oil pressure to engine, low lube oil sump temperature, high lube oil filter differential pressure, lube oil level control tank high level and low level, low lube oil pressure to rocker arms, rocker lube oil strainer high differential pressure, and rocker lube oil reservoir high level.

In addition to the local and control room alarms for low lube oil pressure to the engine, operation of low lube oil pressure switches in a modified two of four logic (as discussed in Section 8.3 and depicted on Figure 8.3-5) initiates automatic shutdown of the engine. None of the other malfunctions shutdown the engine or result in any effects which require immediate operator action. Station operating procedures give the operators guidance for responding to these alarms.

Local indication is provided for lube oil temperature to and from the lube oil cooler and to and from the engine, lube oil strainer differential pressure, lube oil pressure to engine, auxiliary lube oil tank level, lube oil filter differential pressure, lube oil level control tank level, rocker lube oil strainer differential pressure, and lube oil pressure to rocker arms.

Table 9.5.7-2 lists the indicators provided for the various system parameters.

9.5.8 EMERGENCY DIESEL ENGINE COMBUSTION AIR INTAKE AND EXHAUST SYSTEM

The emergency diesel engine combustion air intake and exhaust system (EDECAIES) supplies combustion air of suitable quality to the diesel engines and exhausts the combustion products from the diesel engine to the atmosphere.

9.5.8.1 Design Bases

9.5.8.1.1 Safety Design Bases

The EDECAIES is safety related and is required to function following a DBA and to achieve and maintain the plant in a safe shutdown condition.

SAFETY DESIGN BASIS ONE - The EDECAIES is protected from the effects of natural phenomena, such as earthquakes, tornadoes, hurricanes, floods, and external missiles (GDC-2).

SAFETY DESIGN BASIS TWO - The EDECAIES remains functional after a SSE and performs its intended function following the postulated hazards of fire, internal missiles, or pipe break (GDC-3 and 4).

SAFETY DESIGN BASIS THREE - Provisions are made to allow for inservice inspection of components at appropriate times specified in the ASME Boiler and Pressure Vessel Code, Section XI.

SAFETY DESIGN BASIS FOUR - To the extent practicable, the EDECAIES is designed and fabricated to codes consistent with the quality group classification assigned by Regulatory Guide 1.26 and the seismic category assigned by Regulatory Guide 1.29.

SAFETY DESIGN BASIS FIVE - The EDECAIES is designed to supply combustion air to the diesel engines and to exhaust to the atmosphere the products of combustion so that the diesel generator can be operated continuously at nameplate rating.

9.5.8.1.2 Power Generation Design Bases

The EDECAIES has no power generation design basis.

9.5.8.2 System Description

9.5.8.2.1 General Description

The EDECAIES is shown in Figure 9.5.6-1. Each emergency diesel engine has its own combustion air intake and exhaust system. The combustion air intake system for each engine consists of intake filters, intake silencers, and piping. Separate combustion air intake manifolds are provided for the right and left banks of the cylinders. Combustion air is supplied to each manifold through an intake filter and silencer. The intake system uses the air in the diesel generator room for combustion. The air intake system is located within the diesel generator building and, as such, is not subject to adverse weather conditions which could potentially block the air intake system. The diesel generators building ventilation system serves as the source of makeup air which is used for combustion air by the diesel engine. See Section 9.4.7 for a description of the ventilation system.

A portion of the combustion air from one of the engine combustion air manifolds is used to drive an ejector to maintain a negative pressure in the engine crankcase (refer to Section 9.5.7 for details).

The exhaust system for each engine consists of an exhaust silencer and piping. The products of combustion gases exhausted by the engine and piped through the silencer are discharged outside the diesel generators building approximately 50 feet above the roof.

9.5.8.2.2 Component Description

Codes and standards applicable to the EDECAIES are listed in Tables 3.2-1 and 9.5.8-1. The system is designed and constructed in accordance with the following quality group requirements: All piping within the diesel generator rooms is quality group C. The intake filter, silencers, and flexible connector in the intake piping are not commercially available to quality group C. They are, therefore, designed and constructed to the manufacturer's standards. The piping outside the diesel generators building is quality group D. Those portions of EDECAIES inside the building are seismic Category I, and those portions located outside the building are nonseismic Category I.

INTAKE FILTER - Oil-bath-type air filters are used in the combustion air intake system. The filters are installed in the same room as the engine they serve. Mist eliminator pads are installed within the filters to remove any oil mist from the filtered air. A rain shield is provided over the air inlet to each filter to minimize water carryover in the event the preaction sprinkler system installed for diesel building fire protection is activated. Water carryover into the filter does not reduce the filter efficiency. The entrapped water tends to settle and can be drawn off.

INTAKE AND EXHAUST SILENCERS - Silencers are installed in the intake system to minimize the noise level within the diesel generator room. A silencer is installed in the exhaust system to reduce the noise level outside the diesel generator room. The silencers are the inline type, constructed of carbon steel, and utilize internal baffle arrangements to reduce the level of noise emitted from the EDECAIES.

PIPING - The piping in the EDECAIES is carbon steel. Expansion joints are strategically located to accommodate the thermal growth of the exhaust piping. The piping is sized adequately so that the total pressure drop when the engine is operating at nameplate continuous rating is within the diesel engine manufacturer's recommendations.

ELECTRICAL EQUIPMENT - All electrical equipment mounted outside of the control panels for the diesel generator unit are provided with either NEMA 4 or NEMA 12 enclosures. The control panels themselves are of NEMA 12 construction with filtered ventilation openings.

VENTILATION SYSTEM - The D/G building ventilation system employs no filters and thus supplies outside air directly to the building. However, the system operates primarily only when the D/G is operating and, therefore, minimizes the time during which it operates. The ventilation system intake is located on top of the D/G building and, therefore, intakes only those particulates which are airborne (no ground dust).

9.5.8.2.3 System Operation

During engine standby, normally the minimum temperature in the diesel generator room is maintained at 60 F. The diesel generator room ventilation system provides the required combustion air when the engine is operating. As explained in Section 9.4.7, the ventilation system is designed to provide combustion air under adverse weather conditions and to perform its safety function, assuming a failure of an active component.

The products of combustion are exhausted to outside the diesel building. Each engine has an independent and separate exhaust stack. The stacks discharge the exhaust gases approximately 50 feet above the diesel building roof. The exhaust gases are released approximately 35 feet above the air intake. The intake louvers are located 65 feet horizontally from the diesel stacks. The distances between the combustion air intake and exhaust release, the high exhaust discharge velocity, and the buoyancy of the heated exhaust gases are sufficient to minimize the possibilities of diluting the combustion air with exhaust. Refer to Sections 6.4, 9.4.1, 9.4.2, and 9.4.3 for a discussion on the ingestion of exhaust gases into the ventilating system of other buildings. Refer to Figures 1.2-24 through 1.2-28 for the design features and relative locations of the intake and exhaust structures.

As shown on Figure 1.2-27, the diesel ventilation intake is located in the diesel building penthouse, which is approximately 20 feet below the top of the control building. As shown on Figure 1.2-1, the ESF transformers are located to the north of the diesel intakes. The control building intervenes between the subject ESF transformers (which are at approximately grade elevation) and the diesel intake. The building wake effect of the control building and the buoyancy of the smoke and gases would tend to prevent smoke from a potential ESF transformer fire from entering the intakes. In addition, the intake louvers are located on the downstream side of the penthouse (from the fire) make smoke injection even less likely.

The stacks outside the diesel generators building are non-seismic Category I because the pressure boundary integrity of the stacks is not required for proper operation of the diesel. However, to preclude blockage of exhaust flow from the diesel engines due to a seismic event, the design of the stack meets seismic Category I criteria. The design of the supports for the stacks prevents the stacks from damaging Category I structures and/or components during a seismic event. The stacks are designed to withstand a pressure differential associated with a tornado and are separated horizontally by approximately 35 feet. With this separation, it is improbable that a tornado missile can damage both stacks.

The diesel generator exhausts directly to the outside through the diesel exhaust stacks.

The intake and exhaust louvers are selected on the basis of adverse environmental conditions. Louver blades are fixed and, hence, cannot become inoperable due to freezing or icing. They are designed to reduce cascading and reentrainment of water into the airstream. Design of the louvers is for air inlet velocities below 500 fpm to prevent moisture carryover.

The size of the intake and exhaust louvers is based on the maximum required quantity of cooling air, 120,000 cfm. The maximum amount of combustion air required by the diesel engine is approximately 24,000 cfm. Therefore, the louvers could be as much as 80 percent restricted and still have sufficient open area to allow operation of the diesel without affecting its performance.

Operation of the diesel building HVAC is not interlocked with the diesel engine controls. A failure of, or spurious signal from, the HVAC does not prevent starting of the diesel engine or shutdown of the engine once it is operating.

Refer to Section 2.2 for a discussion of the location of any gases stored on site. There are no gases stored sufficiently close to the diesel building, such that a release would impair operation of the diesel engine through ingestion of the gases into the engine. Water (rain or melted snow) which has entered the diesel exhaust systems through the exhaust stack accumulates in the bottom of the exhaust silencer. Each silencer is provided with two drain lines, to a loop seal, which allow any accumulation of water to be drained off.

The tornado and missile protection for the diesel generators building ventilation system is discussed in Section 9.4.7.

The diesel generator may be required to be operated at no load to low loads (less than 20 percent) and rated speed for extended periods. To reduce the possibility of accumulation of combustion and lube oil products in the exhaust system at low loads, the engine is operated at 50 percent load for one 1-hour period during each subsequent 24 hours, starting with the first hour of each 24-hour period. Above 20 percent load rating, the engine may be run continuously, as required.

This method of operation is based on the manufacturer's recommendations which are now included in the instruction manual. The recommendations are based in part on past experience and in part on a 24-hour no load test conducted on a 12 cylinder Model PC-2.0 engine. That engine successfully accepted a load after 24 hours running at no load. Based on the similarity of the PC 2.5 WCGS engine to the PC 2.0 and the manufacturer's experience with the operating characteristics of each engine type, the manufacturer concludes that the PC 2.5 engine responds more favorably to no load operation than does the PC 2.0 engine. This is confirmed by a report which shows that a PC 2.5 engine has operated in a power plant at essentially no load for at least 24 hours.

9.5.8.3 Safety Evaluation

Safety evaluations are numbered to correspond to the safety design bases in Section 9.5.8.1.

SAFETY EVALUATION ONE - Portions of the EDECAIES are located inside the diesel building. This building is designed to withstand the effects of earthquakes, tornadoes, hurricanes, floods, external missiles, and other appropriate natural phenomena. Sections 3.3, 3.4, 3.5, 3.7(B), and 3.8 provide the bases for the adequacy of the structural design of the building. Section 9.5.8.2 describes the protection provided for the portions of EDECAIES outside the diesel generators building against the effects of natural phenomena.

SAFETY EVALUATION TWO - The safety-related portions of the EDECAIES are designed to remain functional after a safe shutdown earthquake. Sections 3.7(B).2 and 3.9(B) provide the design loading conditions that were considered. Sections 3.5, 3.6, and 9.5.1 provide the hazards analyses to assure that a safe shutdown, as outlined in Section 7.4, can be achieved and maintained.

SAFETY EVALUATION THREE - The EDECAIES is initially tested with the program given in Chapter 14.0. Periodic inservice functional testing is done in accordance with Section 9.5.8.4.

Section 6.6 provides the ASME Boiler and Pressure Vessel Code, Section XI requirements that are appropriate for the EDECAIES.

SAFETY EVALUATION FOUR - Section 3.2 delineates the quality group classification and seismic category applicable to the safety-related portion of this system and supporting systems. Table 9.5.8-1 shows that the component meets the design and fabrication codes given in Section 3.2.

SAFETY EVALUATION FIVE - The EDECAIES components are designed and arranged to provide combustion air of required quality and to exhaust the combustion products when the diesel engine is operating continuously at nameplate rating.

9.5.8.4 Tests and Inspections

Preoperational testing is described in Chapter 14.0.

The EDECAIES is tested periodically, along with the complete diesel generator system. This test demonstrates the performance, structural, and leaktight integrity of all the system components.

The safety-related portions of the EDECAIES are designed and located (to the extent practicable) to permit preservice and inservice inspection.

9.5.8.5 Instrumentation Applications

The EDECAIES instrumentation is designed to provide continuous indication of the system parameters. Refer to Section 8.0 for a list of annunciators for the EDECAIES. Section 9.4.7.5 describes instrumentation provided for the diesel engine room HVAC. Temperature indicators are installed on the local control panel for monitoring combustion air temperature, each cylinder exhaust temperature, cylinder exhaust to the turbocharger, and turbocharger exhaust temperatures.

All appropriate instruments, controls, sensors, and alarms for the diesel engine intake air and exhaust systems are shown on USAR Figure 9.5.6-1, Sheets 1 and 2.

The only malfunction which results in an individual local alarm and a general control room "diesel trouble" alarm is low intake filter suction pressure.

Local indication is provided for combustion air temperature, manifold air pressure, intake filter suction pressure, and exhaust air temperature from each cylinder, for the left side before and after the turbocharger and for the right side before and after the turbocharger.

There are no instruments, controls, or sensors in the intake and exhaust air systems which shut down the engine or when alarmed require immediate operator action.

9.5.9 AUXILIARY STEAM SYSTEM

The auxiliary steam system is designed to provide the steam required for plant heating and processing during plant startup, complete shutdown, and normal operation.

9.5.9.1 Design Bases

9.5.9.1.1 Safety Design Bases

The auxiliary steam system has no safety function. The location of the equipment and the routing of the piping in the auxiliary steam system are based on an evaluation of the effects of both high and moderate energy line breaks.

9.5.9.1.2 Power Generation Design Basis

POWER GENERATION DESIGN BASIS ONE - The auxiliary steam system is designed to provide the steam required for plant heating.

9.5.9.2 System Description

9.5.9.2.1 General Description

The auxiliary steam system is shown in Figure 9.5.9-1. The system consists of steam generation equipment, distribution headers, and condensate return equipment. The auxiliary steam is distributed throughout the plant to the components listed in Table 9.5.9-1.

Normal flow is from the auxiliary steam condensate recovery tank to the auxiliary steam condensate transfer pumps. The pumps discharge from the radwaste building to the auxiliary steam condensate recovery and storage tank located in the auxiliary building. The auxiliary steam deaerator feed pumps take suction from the auxiliary steam condensate recovery and storage tank and supply the auxiliary steam deaerator. The auxiliary steam feedwater pumps take suction from the auxiliary steam deaerator and feed the auxiliary boiler and the auxiliary steam reboiler, depending on which is in operation. Steam generated by the auxiliary steam system is supplied to the plant heating system and process equipment. The condensate from this equipment is then returned to the auxiliary steam condensate recovery tank or the auxiliary steam condensate recovery and storage tank.

Boiler water quality is maintained by blowdown to an atmospheric blowdown tank.

The water levels in the steam boiler, steam reboiler, and the auxiliary steam deaerator are maintained by automatic controls.

Condensate makeup to the auxiliary steam condensate recovery and storage tank is from the condensate storage tank and/or the demineralized water storage and transfer system.

An alarm for high radioactivity levels is provided on the condensate return from the auxiliary steam condensate recovery tank. This alarm automatically cut off the steam supply to the evaporators and shut down the auxiliary steam condensate transfer pumps.

Section 3.6 provides an evaluation that demonstrates that the pipe routing of the auxiliary steam system is physically separated from essential systems to the maximum extent practicable. Protection mechanisms that may be required are discussed in Section 3.6.

9.5.9.2.2 Component Description

Codes and standards applicable to the auxiliary steam system are listed in Table 3.2-1. The auxiliary steam system is designed and constructed in accordance with quality group D specifications.

AUXILIARY STEAM SYSTEM AND BOILER - The auxiliary steam boiler is an oil-fired package boiler with a rated capacity of 100,000 lb/hr of saturated steam at 125 psig. The design pressure of the steam system is 150 psig, and the system is protected from overpressure by relieving through the safety valve on the boiler.

AUXILIARY STEAM REBOILER - The auxiliary steam reboiler is a U-tube-type heat exchanger, using extraction steam or main steam with a rated capacity of 100,000 lb/hr of saturated steam at 125 psig. The design pressure of the steam system id 150 psig, and the system is protected from overpressure by relieving through the safety valve on the reboiler.

AUXILIARY STEAM DEAERATOR - The deaerator is a 100-percent-capacity tray-type unit with a vertical deaerating column and a horizontal storage section. Auxiliary steam is used to preheat the condensate water.

CONDENSATE TANKS - One 600-gallon capacity condensate recovery tank is provided to handle the condensate return in the radwaste building. One 2,500-gallon-capacity condensate recovery and storage tank is provided to handle nonradwaste condensate return and serve as surge capacity for storage of condensate fed to the deaerator.

PUMPS - Two 100-percent-capacity auxiliary steam feedwater pumps are provided which can feed either the auxiliary steam boiler or the auxiliary steam reboiler. The condensate recovery tank and the condensate recovery and storage tank each have two 100-percent-capacity transfer pumps.

9.5.9.2.3 System Operation

During normal operation of the plant, extraction steam from the main turbine is supplied to the auxiliary steam reboiler which produces auxiliary steam. Provision is also made for supply main steam to the auxiliary steam reboiler.

During plant shutdown, the oil-fired auxiliary steam boiler is used to generate auxiliary steam. The switchover from use of the auxiliary steam reboiler to the oil-fired auxiliary boiler is accomplished manually.

Operational safety features are provided within the system for the protection of plant personnel and equipment. Radiological control is inherent by supplying steam at higher pressure for those plant processes which have interface with nuclear process systems.

9.5.9.3 Safety Evaluation

The auxiliary steam system has no safety function.

9.5.9.4 Tests and Inspections

Testing of the auxiliary steam system is performed prior to plant operation.

Components of the system are continuously monitored to ensure satisfactory operation.

Periodic operation of all equipment is utilized for additional inspection, checkout, and maintenance.

9.5.9.5 Instrumentation Applications

The auxiliary steam system is provided with the necessary controls and indicators for local or remote monitoring of the operation of the system.

9.5.10 BREATHING AIR SYSTEM

The Breathing Air System (KB) provides clean purified air for use with respiratory protection and personnel cooling equipment in radiologically controlled areas of WCGS.

9.5.10.1 Design Basis

9.5.10.1.1 Safety Design Basis

SAFETY DESIGN BASIS ONE - The containment isolation valves in the system are selected, tested and located in accordance with the requirements of 10CFR50, Appendix A, General Design Criteria 54 and 56 and 10CFR50, Appendix J Type C testing.

SAFETY DESIGN BASIS TWO - Portions of the system piping are designed in accordance with Seismic Category II/I - Special Scope requirements.

9.5.10.1.2 Power Generation Design Basis

POWER GENERATION DESIGN BASIS ONE - The breathing air system provides clean purified air to various radiologically controlled locations during all modes of operation. However, use of Breathing Air inside containment is limited by the requirements of containment integrity.

POWER GENERATION DESIGN BASIS TWO - The breathing air system is designed so that there are no interconnections with systems that might contain radioactivity.

POWER GENERATION DESIGN BASIS THREE - The breathing air system shall meet the air-supply line requirements of Part II of 30 CFR for Type C supplied-air respirators and the applicable minimum grade requirements for Type I gaseous air set forth in The Compressed Gas Association Commodity Specification for Air, G-7-1 (Grade D or higher quality).

9.5.10.2 System Description

9.5.10.2.1 General Description

The KB system includes two identical skid mounted compressors. Each compressor skid is complete with compressor, electric motor, service liquid line accessories, inlet filter, and discharge separator. Air leaving the discharge separator is directed through a water cooled heat exchanger.

Once the air leaves the compressor skids, it is directed to an air receiver and then to an air dryer/filter train.

9.5.10.2.2 Component Description

Compressors - The two air compressors are double acting liquid ring motor driven units. Each compressor is sized to deliver approximately 300 scfm at 100 psig discharge pressure. The compressors are sized so that each can supply an adequate supply of air to meet normal breathing air and cooling air requirements. The air compressors are non-class IE devices, powered from non-class IE busses. The two compressors use potable water as a service liquid within the compressor and central chilled water in the after-cooler.

Air receivers - Compressed air from the outlet of the air compressor after-cooler flow to a 200 cubic foot galvanized air receiver. The air receiver provides a reservoir of air during air compressor cycling activities and provides a limited amount of breathing air following compressor failure to allow start-up of a standby compressor.

Dryer/Filter Train - The breathing air dryer/filter train consists of a coalescing prefilter, refrigerated air dryer, charcoal absorber after filter, CO and CO_2 converter, and final particulate filter.

9.5.10.2.3 System Operation

The compressors may be individually operated and controlled automatically in response to system demand. Alternately the compressors may be operated in tandem under a "lead-lag" control scheme which alternates the usage of the compressors if both are not required.

Local hand switches are provided to permit the operators to start the standby compressor.

9.5.10.3 Safety Evaluation

Safety evaluations are numbered to correspond to the safety design bases of 9.5.10.1.

Safety Evaluation One - Section 6.2.4 and 6.2.6 provide the safety evaluation for the system containment isolation arrangement and testability.

Safety Evaluation Two - Section 3.7(B).3.13 (BP-TOP-1) provides the safety evaluation for the interaction of seismic Category I piping with nonseismic Category II (II/I) piping.

9.5.10.4 Tests and Inspections

The breathing Air System is in intermittent use, predominantly during refueling outages. Periodic visual inspections and preventive maintenance are conducted using normal industry practice. Air quality testing is periodically performed to ensure compliance with The Compressed Gas Association Commodity Specification for Air, G-7.1 (Grade D or higher quality).

Inservice inspections are performed for the safety related portions of the system per the technical requirements of ASME Section IX, as described in section 6.6. Local leak rate testing in performed in accordance with 10 CFR 50, Appendix J, Type C requirements.

9.5.10.5 Instrumentation Applications

The compressors and associated equipment are provided with local control panels. Each panel consists of temperature and pressure switches, indicators and automatic protection devices.

The dryer/filter train is equipped with local pressure indicators. Local control panel alarms are provided for high differential pressure. The system has continuous sampling of the discharge air for CO, with local alarm and shutdown of the compressors should a high concentration exist.

9.5.11 STATION BLACKOUT DIESEL GENERATOR SUPPORT SYSTEMS

9.5.11.1 General Description

The Station Blackout Diesel Generator System (KU) consists of a missile barrier located outside of the protected area (PA) that contains the necessary equipment required to provide reliable power to 4.16 kV Class 1E bus NB001 or NB002 during a station blackout event, and to non-safety auxiliary feedwater pump (NSAFP).

This equipment includes three diesel generators (DGs) and one Power Equipment Center (PEC). The PEC includes nine 4.16 kV switchgear sections, four control panels, and one 125 volt DC battery system in addition to other auxiliary equipment required to operation of the system.

One control panel is also located in each of the ESF switchgear rooms to allow operation of the station blackout power system without the need for plant personnel to be present in the missile barrier.

Each diesel generator is housed within its own enclosure which contains all equipment necessary to start the DGs.

The connection to the NB001 and NB002 buses is made through an underground electrical raceway system.

The missile barrier and underground electrical raceway are designed to withstand a tornado with 230 mph wind velocities.

The diesel generators are capable of operating over a range of ambient temperatures from -30°F to 120°F.

9.5.11.2 Interfacing Systems

The KU system interfaces with the following systems:

- AP Condensate Storage and Transfer
- KC Fire Protection
- NB Lower Medium Voltage 4.16 kV Class 1E Power
- PB Lower Medium Voltage 4.16 kV Non-Class 1E Power (Power Block)
- QF Public Address system
- RK Plant Annunciator

9.5.11.3 System Testing

The Station Blackout Diesel Generator System will be periodically tested to ensure continued reliability of the system. This system will not be connected to the NB bus for testing when the NB bus is energized by normal sources.

9.5.11.4 Component Descriptions

9.5.11.4.1 Station Blackout Diesel Generator Missile Barrier (Z117)

The missile barrier is constructed to provide protection from tornado winds and tornado generated missiles.

a. The foundation slab is designed for dead loads, live loads, tornado wind and missile loads, and seismic loads according to the International Building Code (IBC). The floor elevation is 2000’, which is above the probable maximum precipitation flooding elevation for the site. The slab thickness will resist overturning and frost.

b. The missile barrier is constructed of five steel reinforced cast-in-place concrete walls running in the north-south direction and removable heavy duty steel grating acting as walls on the north and south ends.

The two outermost (east and west) reinforced cast-in-place concrete walls are constructed to withstand tornado winds and tornado generated missiles. Reinforced cast-in-place concrete vestibules are constructed to protect the door entrances from tornado winds and tornado generated missiles. The outer doors are not missile or fire rated.

The three innermost reinforced cast-in-place concrete walls are to divide the missile barrier into four bays - three for the diesel generators and one for the PEC. These walls provide fire separation between the bays. The doors between the four missile barrier bays are 3-hour fire rated. UL 924 qualified photo-luminescent exit signs are installed near the doors within the missile barrier structure.

Within each diesel generator bay, a partition wall constructed of dampers that are housed by a hollow structural section tube steel frame separates the intake and exhaust sides of the diesel generators.

c. The north and south ends of the missile barrier are constructed of removable heavy-duty steel grating panels to withstand tornado winds and tornado generated missiles. Each end of the missile barrier heavy duty grating consists of four panels, one for each bay. Metal decking is attached to the north end grating of each DG bay to act as a wind barrier against wind from the north. The heavy duty grating and metal decking ensure proper airflow to the diesel generator enclosures for cooling. The heavy duty grating also limits the tornado wind speeds inside the missile barrier to less than or equal to 150 mph during a 230 mph tornado event.

d. The roof is constructed of removable pre-cast reinforced concrete panels except for the northernmost panel in each diesel generator bay which is constructed of heavy duty grating.

9.5.11.4.2 Station Blackout Diesel Generator Enclosure

Each diesel generator bay inside the missile barrier contains a DG enclosure which houses all the equipment necessary to start and run the DGs, i.e., starting battery, jacket water system, radiator, turbochargers, intercoolers, fuel tank, engine/exciter controllers, etc. The provided fuel tanks have sufficient capacity to provide a minimum of 24 hours of run time at full load. The DG enclosures are rated to withstand a wind speed of 150 mph.

TABLE 9.5.1-1

FIRE PROTECTION SYSTEM DESIGN CODES AND STANDARDS

Issued By	Number	Title
National Fire Protection Association (NFPA)	10	Installation of Portable Fire Extinguishers
NFPA	11	Foam Extinguishing Systems
NFPA	12A	Halogenated Extinguishing Agent Systems - Halon 1301
NFPA	13	Installation of Sprinkler Systems
NFPA	13A	Maintenance of Sprinkler Systems
NFPA	13E	Fire Department Operations in Properties Protected by Sprinkler, Standpipe Systems
NFPA	14	Standpipe and Hose Systems
NFPA	15	Water Spray Fixed Systems
NFPA	20	Centrifugal Fire Pumps
NFPA	24	Outside Protection
NFPA	30	Flammable and Combustible Liquids Code
NFPA	37	Combustion Engines and Gas Turbines
NFPA	50A	Gaseous Hydrogen Systems
NFPA	72A	Local Protective Signaling Systems

TABLE 9.5-1-1 (Sheet 2)

Issued By	Number	Title
NFPA	72B	Protective Signaling System
NFPA	72C	Remote Station Protective Signaling Systems
NFPA	72D	Proprietary Protective Signaling Systems
NFPA	72E	Automatic Fire Detectors
NFPA	75	Protection of Electronic Computer/ Data Process Equipment
NFPA	90A	Air Conditioning and Ventilation Systems of Other Than Residential Type
NFPA	321	Classification of Flammable Liquids
NFPA	801	Facilities Handling Radioactive Material
NFPA	803	Fire Protection for Nuclear Power Plants

TABLE 9.5.1-2

Fire Protection System Fire Suppression Systems

System	Area	Design Density/Flow Rate
Automatic wet-pipe sprinkler system	Turbine lube oil storage tank room	0.30 gpm/sq. ft. over the entire area
	Auxiliary boiler room	0.20 gpm/sq. ft. over the entire area
	Turbine lube oil reservoir room	0.30 gpm/sq. ft. over the entire area
	Condenser pit (area beneath the main condensers)	0.30 gpm/sq. ft. for the most remote 5,000 sq. ft.
	Dry waste compactor (radwaste building)	0.15 gpm/sq. ft. over the entire area
	Access control area (control building)	0.15 gpm/sq. ft. for the most remote 1,500 sq. ft.
	Pipe space and tank area (control building)	0.15 gpm/sq. ft. for the most remote 1,500 sq. ft.
	Cable area above access control area	0.30 gpm/sq. ft. for the most remote 1,000 sq. ft.
	Vertical cable chases (auxiliary building)	0.50 gpm/sq. ft. at the ceiling and 0.15 gpm/sq. ft. at the intermediate level for the most remote sprinklers
	Vertical cable chases (control building)	0.50 gpm/sq. ft. with all heads in the most remote level open
	Aux Feedwater Pipe Chase Area (Auxiliary Building)	0.20 gpm/sq. ft. for the most remote 1,500 sq. ft.
	Turbine Building Outage Office	0.15 gpm/sq. ft. for the entire office and storage areas
Automatic water spray system	Hydrogen seal oil unit	0.30 gpm/sq. ft.
	Main transformer	0.25 gpm/sq. ft.
	Startup transformer	0.25 gpm/sq. ft.
	Auxiliary transformer	0.25 gpm/sq. ft.

TABLE 9.5.1-2 (Sheet 2)

System	Area	Design Density/Flow Rate
	Station service transformer	0.25 gpm/sq. ft.
	ESF transformer	0.25 gpm/sq. ft.
Manual water spray system	Auxiliary feedwater pump (turbine driven)	0.30 gpm/sq. ft.
	Steam generator feed pump	0.30 gpm/sq. ft.
	ESW vertical loop chase	0.15 gpm/sq. ft.
Automatic pre-action sprinkler system	Fuel building rail-road bay	0.30 gpm/sq. ft.
	Lower cable spreading room	0.30 gpm/sq. ft. of floor area for the most remote 3,000 sq. ft.
	Upper cable spreading room	0.30 gpm/sq. ft. of floor area for the most remote 3,000 sq. ft.
	Cable trays at El. 1974'-0", 2000'-0", and 2026'-0" of the auxiliary building	0.30 gpm/sq. ft. of associated floor area for the most remote 3,000 sq. ft. of tray surface
	Diesel generator Rooms	0.30 gpm/sq. ft. for entire space with the hydraulically most demanding level of sprinklers operating
	Area below turbine generator operating floor and mezzanine floor	0.30 gpm/sq. ft. for the most remote 5,000 sq. ft.
	Turbine generator	0.30 gpm/sq. ft. for all sprinklers operating around the two most hydraulically remote adjacent bearings
Manual preaction sprinkler system	North cable pene-tration inside the containment	0.30 gpm/sq. ft. of floor area for the most remote 1,000 sq. ft.
	South cable pene-tration inside the containment	0.30 gpm/sq. ft. of floor area for the most remote 1,000 sq. ft.
Halon 1301 System	ESF switchgear rooms	5 percent minimum for 10 minutes
	Nonvital switch-gear and trans-former rooms	5 percent minimum for 10 minutes

TABLE 9.5.1-2 (Sheet 3)

System	Area	Design Density/Flow Rate
Halon 1301 System (cont)	Switchgear rooms	5 percent minimum for 10 minutes
	Control cabinet, load center, and MG sets room	5 percent minimum for 10 minutes
	Electrical penetration rooms	5 percent minimum for 10 minutes
	Control room cable trenches and associated wall chases	5 percent minimum for 10 minutes. (Refer to Sections 9.5.1.2.2.1 and 9.5.1.2.3)

TABLE 9.5.1-3

FIRE PROTECTION SYSTEM TECHNICAL REQUIREMENTS

Deleted |

TABLE 9.5.2-1

COMMUNICATION SYSTEMS IN PLANT AREAS
REQUIRED TO BE MANNED FOR POST FIRE SAFE SHUTDOWN
FOLLOWING CONTROL ROOM EVACUATION

Area	Major Equipment	Available Communications	
Reactor trip switchgear room 1403	Reactor trip switchgear SB102A and B	PA Maintenance jacks	
Class 1E switchgear rooms 3301 and 3302	Class 1E buses NB01 and 2; MCCs NG01A and 2A; load centers NG02 and 04	PA Maintenance jacks Telephone (NB02 side only)	
Penetration rooms 1409 and 1410	Class 1E motor control centers NG01B, 2B, 2T, and 4T	PA Maintenance jacks Telephone	
Auxiliary building HVAC rooms 1501 and 1512	Class 1E air conditioning unit SGK04B; MCCs NG03C and 4C	PA (South room only) Maintenance jack	
Diesel generator room 5201	Diesel generator NE02; MCC NG04D	PA Maintenance jacks	
Auxiliary shutdown panel room 1413	RP118A, B shutdown panels	Maintenance jacks PA Telephone	Approx. 8 feet outside the room

Table 9.5.3-1 Deleted

TABLE 9.5.4-1

EMERGENCY DIESEL ENGINE FUEL OIL STORAGE
AND TRANSFER SYSTEM
COMPONENT DATA

Underground Storage Tanks	
Quantity	2
Type	Horizontal, cylindrical
Capacity gallons, (each)	100,000
Operating pressure/temperature, psig/F	Atm/35 to 80
Design pressure/temperature, psig/F	Atm/120
Material	Carbon steel
Code	ASME Section III, Class 3
Seismic design	Category I
Fuel Oil Transfer Pumps	
Quantity	2
Type	Horizontal, centrifugal submersible
Capacity, gpm (each)	≥15
TDH, ft	75
NPSH required/available	Flooded suction
Material	
Case	Type 316 stainless steel
Impeller	Type 316 stainless steel
Shaft	Type 316 stainless steel
Design Code	ASME Section III, Class 3
Driver	
Type	Canned electric motor
Kilowatts, kW	2.5 with 1.15 service factor
Power supply	460 V, 60 Hz, 3-phase Class IE
Seismic design	Category I
Emergency Fuel Oil Day Tanks	
Quantity	2
Type	Horizontal, cylindrical
Capacity gallons, (each)	621 (includes volume in standpipe)
Operating pressure/temperature, psig/F	Atm/100
Design pressure/temperature, psig/F	5/150
Material	Carbon steel
Code	ASME Section III, Class 3
Seismic design	Category I

TABLE 9.5.4-1 (Sheet 2)

Piping, Fittings, and Valves	
Design pressure, psig	150
Design temperature, F	100
Material	Carbon steel
Design Code	
Safety-related portion	ASME Section III, Class 3
Nonsafety-related portion	ANSI B31.1

TABLE 9.5.4-2

EMERGENCY DIESEL ENGINE FUEL OIL STORAGE AND TRANSFER SYSTEM INDICATING AND ALARM DEVICES

	Indication		Alarm	
Indication Alarm	Control Room	Local	Control Room	Local
Storage tank level	Yes	Yes	Yes	No
Day tank level	Yes	Yes	Yes	No
Transfer pump motor-running lights	Yes	Yes	Yes	No
Fuel oil pressure	No	Yes	Yes*	Yes
Strainer/filter differential pressure	No	Yes	Yes*	Yes

*Common alarm in the control room for local annunciation.

TABLE 9.5.4-3

COMPARISON OF THE DESIGN TO REGULATORY POSITIONS
OF REGULATORY GUIDE 1.137, REVISION 0 DATED JANUARY 1978,
"FUEL-OIL SYSTEMS FOR STANDBY DIESEL GENERATORS"

Regulatory Guide 1.137 Position	WCGS
1. The requirements for the design of fuel-oil systems for diesel generators that provide standby electrical power for a nuclear power plant that are included in ANSI N195-1976, "Fuel Oil Systems for Standby Diesel Generators,"1 provide a method acceptable to the NRC staff for complying with the pertinent requirements of General Design Criterion 17 of Appendix A to 10 CFR Part 50, subject to the following:	
a. Throughout ANSI N195-1976, other documents required to be included as part of the standard are either identified at the point of reference or described in Section 7.4, "Applicable Codes, Standards, and Regulations," or Section 11, "References," of the standard. The specific acceptability of these listed documents has been or will be addressed separately in other regulatory guides or in Commission regulations, where appropriate.	a. No response is required.
b. Section 1, "Scope," of ANSI N195-1976 states that the standard provides the design requirements for the fuel-oil	b. Complies.

TABLE 9.5.4-3 (Sheet 2)

Regulatory Guide 1.137 Position	WCGS
system for standby diesel generators and that it sets forth other specific design requirements such as safety class, materials, physical arrangement, and applicable codes and regulations. The standard does not specifically address quality assurance, and in this regard ANSI N195-1976 should be used in conjunction with Regulatory Guide 1.28, "Quality Assurance Program Requirements (Design and Construction)," which endorses ANSI N45.2-1971, "Quality Assurance Program Requirements for Nuclear Power Plants," for the design, construction, and maintenance of the fuel-oil system.	
c. Section 5.4, "Calculation of Fuel Oil Storage Requirements," of the standard sets forth two methods for the calculation of fuel-oil storage requirements. These two methods are (1) calculations based on assuming the diesel generator operates continuously for 7 days at its rated capacity, and (2) calculations based on the time-dependent loads of the diesel generator. For the time-dependent load method, the minimum required capacity should include the capacity to power the engineered safety features. Applications that use the time-dependent load method to calculate fuel-oil storage requirements will be reviewed on a case-by-case basis along with the calculations.	c. Complies with (1).
d. Section 7.3, "Physical Arrangement," of ANSI N195-1976 states that "the location of the day tanks of standby diesel gen-	d. Complies.

TABLE 9.5.4-3 (Sheet 3)

Regulatory Guide 1.137 Position	WCGS
erators shall be as required by the diesel-engine manufacturer." In addition to this requirement, the day tanks should be located at an elevation to ensure adequate net positive suction head at the engine fuel pumps at all times.	
e. Section 7.3 of ANSI N195-1976 states that the arrangement of the fuel-oil system "shall provide for inservice inspection and testing in accordance with ASME Boiler and Pressure Vessel Code, Section XI, 'Rules for In-Service Inspection of Nuclear Power Plant Components.'"2 Although Section XI of the ASME Boiler and Pressure Vessel Code does not specify whether its provisions apply to fuel-oil systems, they should be applied for the inservice inspection and testing program for those portions of the fuel-oil systems for standby diesel generators that are designed to Section III, Subsection ND of the Code.	e. Complies.
f. Section 7.3 of ANSI N195-1976 states that adequate heating shall be provided for the fuel-oil system. Assurance should be provided that fuel oil can be supplied and ignited at all times under the most severe environmental conditions expected at the facility. This may be accomplished by use of an oil with a "Cloud Point" lower than the 3-hour minimum soak temperature (Ref. 1) expected at the site during the seasonal periods in which the oil is to	f. Complies.

TABLE 9.5.4-3 (Sheet 4)

Regulatory Guide 1.137 Position	WCGS
be used, and/or by maintenance of the onsite fuel oil above the "Cloud Point" temperature.	
g. Section 7.5, "Other Requirements," of the standard states that "protection against external and internal corrosion shall be provided" for the fuel-oil system. To amplify this requirement for buried supply tanks not located within a vault and other buried portions of the system, a waterproof protective coating and an impressed current-type cathodic protection system should be provided in accordance with NACE Standard RP-01-69 (1972 Revision), "Recommended Practice-Control of External Corrosion on Underground or Submerged Metallic Piping Systems."3 In addition, the impressed current-type cathodic protection system should be designed to prevent the ignition of combustible vapors or fuel oil present in the fuel-oil systems for standby diesel generators.	g. Complies.
h. Section 7.5 of the standard includes requirements for fire protection for the diesel-generator fuel-oil system. The requirements of Section 7.5 are not considered a part of this regulatory guide since this subject is addressed separately in more detail in other NRC documents. Thus a commitment to follow this regulatory guide does not imply a commitment to follow the requirements of Section 7.5 concerning fire protection.	h. Complies. See Section 9.5.1.
2. Appendix B to ANSI N195-1976 should be used as a basis for a	

TABLE 9.5.4-3 (Sheet 5)

Regulatory Guide 1.137 Position	WCGS
program to ensure the initial and continuing quality of fuel oil as supplemented by the following:	
a. The oil stored in the fuel-oil supply tank, and the oil to be used for filling and refilling the supply tank, complies with ASTM D975-81, "Standard Specification for Diesel Fuel Oils,"4 or the requirements of the diesel-generator manufacturer, if they are more restrictive, as well as the fuel-oil total insolubles level specified in Appendix B of the standard and the "Cloud Point" requirements given in Regulatory Position C.2.b. Fuel oil contained in the supply tank not meeting these requirements should be replaced in a short period of time (about a week).	a. Complies. Diesel fuel oil used for filling and refilling the supply tank, complies with ASTM D975-81 per Technical Specification requirements.
b. Prior to adding new fuel oil to the supply tanks, tests for the following properties should be conducted: (1) Specific or API gravity (2) Cloud Point (3) Water and Sediment (4) 90% Distillation Temperature The fuel oil complies with ASTM D975-74 for the latter two analyses. The "Cloud Point" should be less than or equal to the 3-hour minimum soak temperature, or the minimum temperature at which the fuel oil will be maintained during the period of time that it will be in storage. Analysis of the other properties of the fuel oil listed in ASTM D975-74 should be completed within 2 weeks of the transfer.	b. Prior to adding new fuel to the supply tanks, it will be sampled in accordance with Technical Specification requirements. See Technical Specifications.

TABLE 9.5.4-3 (Sheet 6)

Regulatory Guide 1.137 Position	WCGS
c. The periodic sampling procedure for the fuel oil should be in accordance with ASTM D270-1975 "Standard Method of Sampling Petroleum and Petroleum Products."5	c. Periodic sampling of fuel oil will be in accordance with Technical Specifications
d. Accumulated condensate should be removed from storage tanks on: (1) a quarterly basis; (2) a monthly basis when it is suspected or known that the ground water table is equal to or higher than the bottom of buried storage tanks; and (3) one day after the addition of new fuel.	d. Complies.
e. Day tanks and integral tanks should be checked for water monthly, as a minimum, and after each operation of the diesel where the period of operation was 1 hour or longer. Any accumulated water should be removed immediately. If it is suspected that water has entered the suction piping from the day or integral tank, the entire fuel-oil system between the day or integral tank and the injectors should be flushed.	e. Complies. Present experience indicates that removal of water from the day tank every 31 days provides sufficient protection to the EDGs.
f. As a minimum, the fuel oil stored in the supply tanks should be removed, the accumulated sediment removed, and the tanks cleaned in order to perform the ASME Section XI, Article IWD-2000, "Examination Requirements," at the required 10-year intervals. To preclude the introduction of surfactants in the fuel system, this cleaning	f. Complies by removing the fuel oil from the storage tanks, removing accumulated sediment, and cleaning of the tanks once per 10 years. (See 9.5.4.2.1) ASME Section XI, IWD-2000 examinations are not a basis for draining and cleaning of the tanks. ISI examinations are conducted in accordance with the ISI Program.

TABLE 9.5.4-3 (Sheet 7)

Regulatory Guide 1.137 Position	WCGS
should be accomplished using sodium hypochlorite solutions or its equivalent rather than soap or detergents.	
g. Assuming an unlikely event should occur that would require replenishment of fuel oil without the interruption of operation of the diesel generators, the method of adding additional fuel oil should be such as to minimize the creation of turbulence of the accumulated residual sediment in the bottom of the supply tank since stirring up this sediment during the addition of acceptable new incoming fuel has the potential of causing the overall quality of the fuel oil in the storage tank to become unacceptable.	g. Complies. Refer to 9.5.4.2.3.
h. Cathodic protection surveillance should be conducted according to the following procedures:	h. Complies.
(1) At intervals not exceeding 12 months, tests should be conducted on each underground cathodic protection system to determine whether the protection is adequate.	
(2) The test leads required for cathodic protection should be maintained in such a condition that electrical measurements can be obtained to ensure the system is adequately protected.	
(3) At intervals not exceeding 2 months, each of the cathodic protection rectifiers should be inspected.	

TABLE 9.5.4-3 (Sheet 8)

Regulatory Guide 1.137 Position	WCGS
(4) Records of each inspection and test should be maintained over the life of the facility, to assist in evaluating the extent of degradation of the corrosion protection systems.	

NOTES:

1. Copies may be obtained from the American Nuclear Society. 555 North Kensington Avenue, La Grange Park, Illinois 60525.

2. Copies may be obtained from the American Society of Mechanical Engineers. United Engineering Center. 345 East 47th Street, New York, N.Y. 10017.

3. Copies may be obtained from the National Association of Corrosion Engineers, 2400 West Loop South, Houston, Texas 77027.

4. Also designated ANSI Z11.205-1975. Copies may be obtained from the American National Standards Institute, 1430 Broadway, New York, N.Y. 10018.

5. Also designated ANSI Z11.33-1976. Copies may be obtained from the American National Standards Institute, 1430 Broadway, New York, N.Y. 10018.

TABLE 9.5.5-1

EMERGENCY DIESEL ENGINE COOLING WATER SYSTEM
COMPONENT DATA
(PER DIESEL ENGINE)

Jacket Cooling Water Pump

Quantity	1
Type	Horizontal centrifugal
Capacity, gpm	1,054
TDH, ft	128
Design code	MS
Driver	Engine driven
Seismic design	Category I

Jacket Coolant Keepwarm Pump

Quantity	1
Type	Horizontal centrifugal
Capacity, gpm	50
TDH, ft	20
Design code	ASME Section III, Class 3
Driver	
Type	Electric motor
Horsepower, hp	0.75
Rpm	1,800
Power supply	460 V, 60 Hz, 3-phase Class IE
Design Code	NEMA
Seismic design	Category I

Jacket Cooling Water Heat Exchanger

Quantity	1
Type	Horizontal shell and tube
Design duty, Btu/hr	7.24×10^6
Seismic design	Category I
Codes and standards	ASME Section III, Class 3 TEMA R, ASME Section VIII Div 1
Tube side:	
Fluid	Service water/essential service water
Temperature in/out, F	103.2/115.2
Flowrate, gpm	1,200
Design pressure, psig	200
Design temperature, F	200

TABLE 9.5.5-1 (Sheet 2)

Material:	
Tubes	UNS N08367 class 2
Tubesheet	5A-240 Type 304/L or 5A-182 Gr. F304/L
Shell side:	
Fluid	Jacket cooling water
Temperature in/out, F	180/165.8
Flowrate, gpm	1,050
Design pressure, psig	150
Design temperature, F	200
Material	Carbon steel

Jacket Coolant Keepwarm Heater

Quantity	1
Type	Electric
Design rating, kW	42
Power supply	480 V, 60 Hz, 3 phase Class IE
Code (pressure boundary)	ASME Section III, Class 3
Seismic design	Category I

Expansion Tank

Quantity (per engine)	1
Type	Horizontal, cylindrical
Capacity, gallon	100
Operating pressure/temperature, psig/F	Atm./122
Material	Carbon steel
Code	ASME Section III, Class 3
Seismic design	Category I

Intercooler Cooling Water Pump

Quantity (per engine)	1
Type	Horizontal centrifugal
Capacity, gpm	1,063
TDH, ft	126
Design code	MS
Driver	Engine driven
Seismic design	Category I

Intercooler Heat Exchanger

Quantity (per engine)	1
Type	Horizontal shell and tube
Design duty, Btu/hr	4.85×10^6
Seismic design	Category I
Codes and standards	ASME Section III, Class 3, TEMA R

TABLE 9.5.5-1 (Sheet 3)

Tubeside:	
Fluid	Service water/essential service water
Temperature in/out, F	95/105
Flowrate, gpm	1,200
Design pressure, psig	200
Design temperature, F	200
Material:	
Tubes	SB-676 (UNS N08367 CLASS 2)
Tubesheet	SA-240 Type 304L
Shell side:	
Fluid	Intercooler cooling water
Temperature in/out, F	121/110
Flowrate, gpm	1,050
Design pressure, psig	150
Design temperature, F	200
Material	Carbon steel
Piping, Fittings, and Valves	
Material	Carbon and stainless steel
Design code	
Safety-related portion (except flexible connectors)	ASME Section III, Class 3
Flexible connectors	MS
Seismic design	Category I

*As noted in the NRC Safety Evaluation for License Amendment 134. WCNOC has stated that the tube plugging limits for the Emergency Diesel Generator Heat Exchangers will be based on a service water inlet temperature of 96° F at the inlet to the intercooler heat exchangers and 104.2°F at the inlet to the jacket water heat exchangers.

TABLE 9.5.6-1

EMERGENCY DIESEL ENGINE STARTING SYSTEM
COMPONENT DATA

Compressors	
Quantity (per engine)	2
Type	Reciprocating, air cooled
Capacity, scfm	31
Discharge pressure, psig	700
Air temperature leaving cooler, F	160
No. of stages	3
Design code	MS
Driver	
Type	Electric motor
Horsepower, hp	15
Rpm	1,800
Power supply	480 V, 60 Hz, 3 phase non-1E
Seismic design	Nonseismic Category I
Dryers	
Quantity (per engine)	2
Type	Membrane, automatic regenerative
Capacity, scfm	50 scfm
Design pressure, psig	1200
Air inlet temperature, F	122
Dew point of air leaving dryer, F	(-)40
Design code	MS
Seismic design	Nonseismic Category I
Starting Air Tanks	
Quantity (per engine)	2
Type	Horizontal, cylindrical
Capacity, cu ft	55
Design pressure/temperature psig/F	670/142
Operating pressure/temperature, psig/F	640/122
Material	Carbon steel
Code	ASME Section III, Class 3
Seismic design	Category I

TABLE 9.5.6-1 (Sheet 2)

Piping, Fittings, and Valves (Safety Related)

Material	Carbon steel
Design code	ASME Section III, Class 3
Seismic design	Category I

Piping, Fittings, and Valves (Nonsafety Related)

Material	Carbon steel
Design code	MS

TABLE 9.5.7-1

EMERGENCY DIESEL ENGINE LUBRICATION SYSTEM
COMPONENT DATA

Main Oil Pump	
Quantity, (per engine)	1
Type	Positive displacement, rotary
Capacity, gpm	631
Relief valve set pressure, psig	110-115
Design code	MS
Driver	Engine driven
Seismic design	Category I
Keepwarm Pump	
Quantity (per engine)	1
Type	Positive displacement, Screw
Capacity, gpm	75
Relief valve set pressure, psig	130
Design code	(Note 1)
Driver	
Type	Electric motor
Horsepower, hp	20
Rpm	1800
Power supply	460 V, 60 Hz, 3 phase Class IE
Design code	NEMA
Seismic design	Category I
Oil Cooler	
Quantity, (per engine)	1
Type	Horizontal shell and tube
Design duty, Btu/hr	2.2×10^6
Codes and standards	ASME Section III, Class 3 TEMA R
Seismic design	Category I
Tubeside:	
Fluid	Service water/essential service water
Temperature in/out, F	118/123
Flowrate, gpm	1,200
Design pressure, psig	200
Design temperature, F	200
Material	
Tubes	SB-676 (UNS N08367 CLASS 2)
Tubesheet	SA-240 Type 304L
Shellside:	
Fluid	Lubricating oil
Temperature in/out, F	160/141
Flowrate, gpm	630
Design pressure, psig	150
Design temperature, F	200
Material	Carbon steel

TABLE 9.5.7-1 (Sheet 2)

Keepwarm Heater	
Quantity, (per engine)	1
Type	Electric
Design rating, kW	24
Power supply	480 V, 60 Hz, 3 phase Class IE
Code (pressure boundary)	ASME Section III, Class 3
Seismic design	Category I
Makeup Tank	
Quantity, (per engine)	1
Type	Horizontal, cylindrical
Capacity, gallon	300
Operating pressure/ temperature, psig/F	Atm./amb.
Material	Carbon steel
Code	ASME Section III, Class 3
Seismic design	Category I
Main Oil Strainer	
Quantity, (per engine)	1
Type	Duplex, removable basket type
Flowrate, gpm	700
Particle retention capability	30 micron (nominal) 56 micron (absolute)
Design pressure/temperature, psig/F	150/200
Material	
Screen	Stainless steel
Housing	Carbon steel
Code (pressure boundary)	ASME Section III, Class 3
Seismic design	Category I
Bypass Filter	
Quantity, (per engine)	1
Type	Cartridge type, simplex
Flowrate, gpm	75
Design pressure temperature, psig/F	150/200
Filtering capacity, microns	5 (nominal)
Material	
Housing	Carbon steel
Filter	Cellulose
Code (pressure boundary)	ASME Section III, Class 3
Seismic design	Category I

TABLE 9.5.7-1 (Sheet 3)

Rocker Lube Oil Pump	
Quantity, (per engine)	1
Type	Rotary, positive displacement
Capacity, gpm	2.2
Relief valve set pressure, psig	20
Design code	MS
Driver	Engine driven
Seismic design	Category I
Rocker Prelube Pump	
Quantity, (per engine)	1
Type	Rotary, positive displacement
Capacity, gpm	2.2
Relief valve set pressure, psig	20
Design code	MS
Driver	
Type	Electric motor
Horsepower, hp	0.5
Rpm	1,200
Power supply	460 V, 60 Hz, 3 phase Class IE
Design code	NEMA
Seismic design	Category I
Rocker Lube Oil System Strainer	
Quantity, (per engine)	1
Type	Duplex, removable basket type
Flowrate, gpm	2.5
Design pressure/temperature, psig/F	25/200
Capacity, microns	30/40 microns (nominal/absolute)
Material	
Housing	Carbon steel
Screen	Stainless Steel
Design code	MS
Seismic design	Category I
Piping, Fittings, and Valves	
Material	Carbon steel
Design code	
Safety-related portion (except flexible connectors)	ASME Section III, Class 3
Flexible connectors	MS
Seismic design	Category I

Note 1: The component design and reliability has been proven through years of previous service. The standards used in design, manufacture and inspection are the manufacturer's standards developed by manufacturing and testing experience. The design meets seismic category I requirements and is equivalent to the originally supplied ASME Section III component.

TABLE 9.5.7-2

EMERGENCY DIESEL ENGINE LUBRICATION SYSTEM
INDICATING DEVICES

Indication	Local Panel Mounted	Engine Skid Mounted
Oil pressure to engine header	Yes	No
Oil pressure from engine	No	No
Oil temperature to engine header	Yes	No
Oil cooler inlet temperature	No	Yes
Oil cooler outlet temperature	No	Yes
Main oil strainer differential pressure	No	Yes
Bypass filter differential pressure	No	Yes
Sump oil level	Yes	No
Makeup tank oil level	Yes	No
Rocker oil header pressure	Yes	No
Rocker oil strainer differential pressure	No	Yes
Crankcase pressure	Yes	Yes

TABLE 9.5.8-1

EMERGENCY DIESEL ENGINE COMBUSTION AIR
INTAKE AND EXHAUST SYSTEM COMPONENT DATA

Air Intake Filter	
Quantity (per engine)	2
Type	Oil bath
Design flow, cfm	
Design pressure/temperature, psig/F	
Material	Carbon steel
Quantity of oil, gals	59
Code	MS
Seismic design	Category I
Intake Silencer	
Quantity (per engine)	2
Type	Horizontal
Design flow, cfm	
Design pressure/temperature, psig/F	
Material	Carbon steel
Code	MS
Seismic design	Category I
Exhaust Silencer	
Quantity (per engine)	1
Type	Horizontal
Design flow, cfm	
Design pressure/temperature, psig/F	
Material	Carbon steel
Code	MS
Seismic design	Category I
Piping	
Material	Carbon steel
Design code	
Inside diesel building (except flexible connectors in the intake piping)	ASME Section III, Class 3
Flexible connectors (intake)	MS
Outside the building	ANSI B31.1
Seismic design	Category I

TABLE 9.5.9-1

COMPONENTS SUPPLIED BY AUXILIARY STEAM

	Component	Referenced Section	Steam Rate ($x\ 10^4$ lb/hr)
a.	Plant heating heat exchanger	9.4.9	1.966
b.	Recycle evaporator package (1)	9.3.6	0
c.	Waste evaporator package (1)	11.2	1.06
d.	Outdoor storage tank heating	6.3, 9.2	0.066
e.	Turbine steam seal system	10.4.3	1.9-3.4
f.	Secondary liquid waste evaporator (1)	10.4.10	0
g.	Condenser sparging	10.4.1	2.75
h.	Boric acid batching tank	9.3.4	0.05
i.	Decontamination areas in the auxiliary building and containment (2)	N/A	0
j.	Moisture separator reheater tube blanketing	10.2	0.2

Note 1: Equipment no longer in service.
Note 2: The decontamination areas in the auxiliary building and containment are no longer in service.

This page left intentionally blank.

WOLF CREEK
UPDATED SAFETY ANALYSIS REPORT

FIGURE 9.5-3

ESW PUMP HOUSE
FIRE PROTECTION

This page intentionally left blank.

Rev. 19

WOLF CREEK
UPDATED SAFETY ANALYSIS REPORT

FIGURE 9.5.1-3

REACTOR COOLANT PUMP LUBE
OIL COLLECTION SYSTEM

SHEET 1

This page left intentionally blank.

WOLF CREEK
UPDATED SAFETY ANALYSIS REPORT

FIGURE 9.5.1-3

REACTOR COOLANT PUMP LUBE OIL COLLECTION SYSTEM

SHEET 2

APPENDIX 9.5A

Design Comparison to Regulatory Positions of Regulatory Guide 1.120, Revision 1, Dated November 1977, Titled "Fire Protection Guidelines for Nuclear Power Plants"

The basis for compliance to Regulatory Guide 1.120 is the implementation of Appendix A of NRC Branch Technical Position (BTP) APCSB 9.5-1. The following provides a summary of the compliance with APCSB 9.5-1.

TABLE 9.5A-1

WCGS FIRE PROTECTION COMPARISON TO APCSB 9.5-1 APPENDIX A

APCSB 9.5-1 Appendix A	WCGS
Positions	
A. Overall Requirements of Nuclear Plant Fire Protection Program	
1. Personnel	
Responsibility for the overall fire protection program should be assigned to a designated person in the upper level of management. This person should retain ultimate responsibility even though formulation and assurance of program implementation is delegated.	The President and Chief Executive Officer is ultimately responsible for the Fire Protection Program. The implementation is delegated to the Supervisor Fire Protection who is responsible for the administration of the Fire Protection Program.
Such delegation of authority should be to staff personnel prepared by training and experience in fire protection and nuclear plant safety to provide a balanced approach in directing the fire protection programs for nuclear power plants.	The President and Chief Executive Officer and Supervisor Fire Protection are supported by a Fire Protection Engineer. This Fire Protection Engineer shall be a Professional Grade member of the Society of Fire Protection Engineers (SFPE) or shall have qualifications equivalent to the professional grade membership requirements of SFPE.
The qualification requirements for the fire protection engineer or consultant who assists in the design and selection of equipment, inspects and tests the completed physical aspects of the system,	The basic design of the fire protection system, selection of equipment, and coordination of layout with fire area requirements was the direct responsibility of a licensed senior mechanical engineer assigned full time to the SNUPPS project. Additional assistance has been provided by licensed fire protection, and graduate fire protection

TABLE 9.5A-1 (Sheet 2)

APCSB 9.5-1 Appendix A	WCGS
develops the fire protection program, and assists in the fire-fighting training for the operating plant should be stated.	engineers. The entire fire protection system, including the fire hazards analyses, have been reviewed by a licensed fire protection engineer.
Subsequently, the USAR should discuss the training and the updating provisions such as fire drills provided for maintaining the competence of the station fire-fighting and operating crew, including personnel responsible for maintaining and inspecting the fire protection equipment.	The WCGS Fire Protection Program discusses the training and the updating provisions such as fire drills provided for maintaining the competence of the station fire fighting and operating crew, including personnel responsible for maintaining and inspecting fire protection equipment. Maintenance of the fire protection system is the responsibility of the Manager Operations and Manager Maintenance. Fire prevention and fire training is maintained under the direction of the Supervisor Fire Protection who may delegate certain of these responsibilities.
The Fire Protection Staff should be responsible for:	
a) coordination of building layout and system design with fire area requirements, including consideration of potential hazards associated with postulated design basis fires,	
b) design and maintenance of fire detection, suppression, and extinguishing systems,	

TABLE 9.5A-1 (Sheet 3)

APCSB 9.5-1 Appendix A	WCGS
c) fire prevention activities,	
d) training and manual fire-fighting activities of plant personnel and the fire brigade.	
2. <u>Design Bases</u>	
The overall fire protection program should be based upon evaluation of potential fire hazards throughout the plant and the effect of postulated design basis fires relative to maintaining ability to perform safety shutdown functions and minimize radioactive releases to the environment.	The overall fire protection program is based upon evaluation of potential fire hazards throughout the plant and the effect of postulated design basis fires relative to maintaining ability to perform post-fire safe shutdown functions and minimize radioactive releases, as described in powerblock fire hazards analysis, E-1F9905. The Fire Protection Program incorporating those aspects of fire protection outside the power block are based upon an evaluation of potential fire hazards throughout the plant and the effect of postulated design basis fires relative to maintaining ability to perform post-fire safe shutdown functions and minimize radioactive releases as discussed in the WCGS fire hazards analysis, E-1F9905.
3. <u>Backup</u>	
Total reliance should not be placed on a single automatic fire suppression system. Appropriate backup fire suppression capability should be provided.	Where automatic extinguishing systems are provided, appropriate backup fire suppression capability is provided.

TABLE 9.5A-1 (Sheet 4)

APCSB 9.5-1 Appendix A	WCGS
4. <u>Single Failure Criterion</u>	
A single failure in the fire suppression system should not impair both the primary and backup fire suppression capabiity. For example, redundant fire water pumps with independent power supplies and controls should be provided. Postulated fires or fire protection system failures need not be considered concurrent with other plant accidents or the most severe natural phenomena.	A single failure in the fire suppression system does not impair both the primary and backup fire suppression capability as described in Section 9.5.1.3. Two full capacity fire pumps with independent power sources and controls are provided.
The effects of lightning strikes should be included in the overall plant fire protection program.	Lightning protection for the containment is provided in accordance with NFPA No. 78-1975 and the requirements of Underwriters' Laboratories, Inc. UL-96A-June, 1963.
5. <u>Fire Suppression Systems</u>	
Failure or inadvertent operation of the fire suppression system should not incapacitate safety-related systems or components. Fire suppression systems that are pressurized during normal plant operation should meet the guidelines specified in APCSB Branch Technical Position 3-1, "Protection Against	Failure or inadvertent operation of the fire suppression system does not incapacitate safe shutdown systems or components, as described in Section 9.5.1.2.1. Fire suppression systems that are pressurized during normal plant operation meet the guidelines specified in APCSB Branch Technical Position 3-1, "Protection Against Postulated Piping Failures in Fluid Systems Outside Containment."
	The site-related structures and

TABLE 9.5A-1 (Sheet 5)

APCSB 9.5-1 Appendix A	WCGS
Postulated Piping Failures in Fluid Systems Outside Containment".	systems are remotely located from the power block and do not pose a hazard to safety-related structures and systems.
6. Fuel Storage Areas	
Schedule for implementation of modifications, if any, are established on a case-by-case basis.	The Fire Protection Program and equipment for buildings storing new and spent reactor fuel and for adjacent fire areas which could affect the fuel storage zone were fully operational before fuel was received at WCGS.
7. Fuel Loading	
Schedule for implementation of modifications, if any, are established on a case-by-case basis.	The Fire Protection Program and equipment for WCGS was operational prior to initial fuel loading.
8. Multiple-Reactor Sites	Not applicable to WCGS.
9. Simultaneous Fires	Not applicable to WCGS.
B. Administrative Procedures, Controls and Fire Brigade	
1. Administrative procedures consistent with the need for maintaining the performance of the fire protection system and personnel in nuclear power plants should be provided.	Administrative procedures were developed for control of training, maintenance, and testing required to ensure the fire protection of all safety-related systems in the plant as discussed in the WCGS Fire Protection Program. The listed NFPA publications were utilized for guidance in development of these procedures.
Guidance is contained in the following publications:	
NFPA 4 - Organization for Fire Services	

TABLE 9.5A-1 (Sheet 6)

APCSB 9.5-1 Appendix A	WCGS
NFPA 4A - Organization for Fire Department	
NFPA 6 - Industrial Fire Loss Prevention	
NFPA 7 - Management of Fire Emergencies	
NFPA 8 - Management Responsibility for Effects of Fire on Operations	
NFPA 27 - Private Fire Brigades	
2. Effective administrative measures should be implemented to prohibit bulk storage of combustible materials inside or adjacent to safety-related buildings or systems during operation or maintenance periods. Regulatory Guide 1.39, "Housekeeping Requirements for Water-Cooled Nuclear Power Plants", provides guidance on housekeeping, including the disposal of combustible materials.	Administrative measures are implemented to control the storage of combustible materials inside or adjacent to safety- -related buildings or systems during normal operation or maintenance periods. The guidance provided by Regulatory Guide 1.39, "Housekeeping Requirements for Water-Cooled Nuclear Power Plants" is utilized in the development of these measures.
3. Normal and abnormal conditions or other anticipated operations such as modifications (e.g., breaking, fire stops, impairment of	Work Control Procedures, which include identification of the need for special action such as a fire watch, are utilized. Such procedures are reviewed by appropriate levels of management.

TABLE 9.5A-1 (Sheet 7)

APCSB 9.5-1 Appendix A	WCGS
fire detection and suppression systems) and refueling activities should be reviewed by appropriate levels of management and appropriate special actions and procedures such as fire watches or temporary fire barriers implemented to assure adequate fire protection and reactor safety. In particular:	
a) Work involving ignition sources such as welding and flame cutting should be done under closely controlled conditions. Procedures governing such work should be reviewed and approved by persons trained and experienced in fire protection. Persons performing and directly assisting in such work should be trained and equipped to prevent and combat fires. If this is not possible, a person qualified in fire protection should directly monitor the work and function as a fire watch.	Work involving a transient ignition source (hot work) is administratively controlled. An individual, trained as a transient ignition source permit issuing authority, is involved in review of hot work activities and a trained hot work fire watch is provided to prevent and extinguish a hot work related fire.

TABLE 9.5A-1 (Sheet 8)

APCSB 9.5-1 Appendix A	WCGS
b) Leak testing, and similar procedures such as air flow determination, should use one of the commercially available aerosol techniques. Open flames or combustion generated smoke should not be permitted.	Leak testing and similar procedures such as air flow determination do not use open flames or combustion-generated smoke where safety-related systems could be affected.
c) Use of combustible material, e.g., HEPA and charcoal filters, dry ion exchange resins or other combustible supplies, in safety-related areas should be controlled. Use of wood inside buildings containing safety-related systems or equipment should be permitted only when suitable non-combustible substitutes are not available. If wood must be used, only fire retardant treated wood (scaffolding, lay down blocks) should be permitted. Such materials should be allowed into safety-related areas only when they are to be used immediately. Their possible and	The use of combustible materials inside or adjacent to safety-related areas are administratively controlled and where possible, fire retardant products are used. See the WCGS Fire Protection Program.

TABLE 9.5A-1 (Sheet 9)

APCSB 9.5-1 Appendix A	WCGS
probable use should be considered in the fire hazard analysis to determine the adequacy of the installed fire protection systems.	
4. Nuclear power plants are frequently located in remote areas, at some distance from public fire departments. Also, first response fire departments are often volunteer. Public fire department response should be considered in the overall Fire Protection Program. However, the plant should be designed to be self-sufficient with respect to fire fighting activities and rely on the public response only for supplemental or backup capability.	WCGS was designed to be self-sufficient with respect to on-site fire fighting activities. Coffey County Fire District #1 is available for supplemental and/or backup assistance as described in the Fire Protection Program. No credit is taken in the fire protection system design for this response.
5. The need for good organization, training and equipping of fire brigades at nuclear power plant sites requires effective measures be implemented to assure proper discharge of these functions. The guidance in Regulatory Guide 1.101, "Emergency Planning for	The WCGS Emergency Plan has been prepared utilizing the guidance provided by Regulatory Guide 1.101, "Emergency Planning for Nuclear Power Plants." The WCGS Fire Protection Program outlines the measures to be implemented to ensure the proper organization, training and equipping of fire brigades.

TABLE 9.5A-1 (Sheet 10)

APCSB 9.5-1 Appendix A	WCGS
Nuclear Power Plants" should be followed as applicable.	
a) Successful fire fighting requires testing and maintenance of the fire protection equipment, emergency lighting and communication, as well as practice as brigades for the people who must utilize the equipment. A test plan that lists the individuals and their responsibilities in connection with routine tests and inspections of the fire detection and protection systems should be developed. The test plan should contain the types, frequency and detailed procedures for testing. Procedures should also contain instructions on maintaining fire protection during those periods when the fire protection system is impaired or during periods of plant maintenance, e.g., fire watches or temporary hose connections to water systems.	A test plan for fire protection was developed (See the WCGS Fire Protection Program). Procedures necessary to assure adequate fire protection during refueling or maintenance are discussed in Items B.3 and B.3.a.

TABLE 9.5A-1 (Sheet 11)

APCSB 9.5-1 Appendix A	WCGS	
b)	Basic training is a necessary element in effective fire fighting operation. In order for a fire brigade to operate effectively, it must operate as a team. All members must know what their individual duties are. They must be familiar with the layout of the plant and equipment location and operation in order to permit effective fire-fighting operationsduring times when a particular area is filled with smoke or is insufficiently lighted. Such training can only be accomplished by conducting drills several times a year (at least quarterly) so that all members of the fire brigade have had the opportunityto train as a team, testing itself in the major areas of the plant. The drills should include the simulated use of equipment in each area and should be pre-planned and post-critiqued to	Details concerning Fire Brigade Training and Drills can be found in the WCGS Fire Protection Program.

TABLE 9.5A-1
(Sheet 12)

	establish the training objective of the drills and determine how well these objectives have been met. These drills should periodically (at least annually) include local fire department participation where possible. Such drills also permit supervising personnel to evaluate the effectiveness of communications within the fire brigade and with the on scene fire team leader, the reactor operator in the control room, and the off-site command post.	
c)	To have proper coverage during all phases of operation, members of each shift crew should be trained in fire protection. Training of the plant fire brigade should be coordinated with the local fire department so that responsibilities and duties are delineated in advance. This coordination should be part of the training course and implemented into the	During all phases of operation of the plant, each shift has a sufficient number of individuals trained in fire prevention and suppression to provide for appropriate fire protection of the facility. Local fire departments assist and participate in the training program to provide a mutual understanding of responsibilities and duties, the operational precautions necessary when fighting fires at nuclear plant sites, the need for radioactive protection of personnel and the special hazards associated with a nuclear power plant site.

TABLE 9.5A-1 (Sheet 13)

APCSB 9.5-1 Appendix A	WCGS
training of the local fire department staff. Local fire departments should be educated in the operational precautions when fighting fires on nuclear power plant sites. Local fire departments should be made aware of the need for radioactive protection of personnel and the special hazards associated with a nuclear power plant site.	The training program utilizes courses in fire prevention and suppression which are recognized and/or sponsored by the fire protection industry. See the WCGS Fire Protection Program for additional fire protection training information.
d) NFPA 27, "Private Fire Brigade" should be followed in organization, training, and fire drills. This standard also is applicable for the inspection and maintenance of fire fighting equipment. Among the standards referenced in this document, the following should be utilized: NFPA 194, "Standard for Screw Threads and Gaskets for Fire Hose Couplings", NFPA 196, "Standard for Fire Hose", NFPA 197, "Training Standard on Initial Fire Attacks", NFPA	See the WCGS Fire Protection Program.

TABLE 9.5A-1 (Sheet 14)

APCSB 9.5-1 Appendix A	WCGS
601, "Recommended Manual of Instructions and Duties for the Plant Watchman on Guard." NFPA booklets and pamphlets listed on Page 27-11 of Volume 8, 1971-72 are also applicable for good training references. In addition, courses in fire prevention and fire suppression which are recognized and/or sponsored by the fire protection industry should be utilized.	
C. <u>Quality Assurance Program</u>	
Quality Assurance (QA) Programs of applicants and contractors should be developed and implemented to assure that the requirements for design, procurement, installation, and testing and administrative controls for the fire protection program for safety related areas as defined in this Branch Position are satisfied. The program should be under the management control of the QA organization. The QA program criteria that apply to the fire protection program should include the following:	The Fire Protection QA Program is a graded QA program under the management of the WCGS Quality Branch. The Quality Program, which is applied to fire protection, is derived from 10CFR50 Appendix B, and from criteria 2 and 4 through 10 as specified in Attachment 6 of D. B. Vassallo's letter of August 29, 1977. The QA Program for fire protection during the Design and Construction phase is given in the "Quality Assurance Programs for Design and Construction" document. The following paragraphs describe the commitments made in this graded QA Program during the Plant Operations phase.

TABLE 9.5A-1 (Sheet 15)

APCSB 9.5-1 Appendix A	WCGS
	The QA program for fire protection was revised to include the A/E QA organization review, surveillance and audit to help verify the effectiveness of the QA program for fire protection.
1. <u>Design Control and Procurement Document Control</u> Measures should be established to assure that all design-related guidelines of the Branch Technical Position are included in design and procurement documents and that deviations there from are controlled.	Design control and procurement document control include the following: a. Measures to assure that quality standards are specified in design documents such as appropriate fire protection codes and standards, and deviations and changes from these quality standards are controlled. b. Design reviews by knowledgeable personnel to assure inclusion of appropiate fire protection requirements such as: 1. Verification of adequacy of wiring isolation and cable separation criteria. 2. Verification of appropriate requirements for room isolation (sealing penetrations, floors, and other fire barriers). c. Measures to assure that procurement documents adequately state and are reviewed for fire protection requirements and that the requirements are

TABLE 9.5A-1 (Sheet 16)

APCSB 9.5-1 Appendix A	WCGS
	inspectable and controllable and the acceptance-rejection criteria are stated.
	d. Measures to assure that design and procurement document changes, including field changes, are subject to the same controls, reviews, and approvals applicable to the original document.
2. <u>Instructions, Procedures and Drawings</u>	
Inspections, tests, administrative controls, fire drills and training that govern the Fire Protection Program should be prescribed by documented instructions, procedures or drawings and should be accomplished in accordance with these documents.	Inspections, tests, administrative controls, fire drills, and training are also addressed in the WCGS Fire Protection Program. Instructions and procedures by which indoctrination and training programs are conducted for fire protection and fire fighting have been developed and implemented. Design, installation, inspection, test, maintenance and modification of fire protection systems are accomplished in accordance with documented instructions, procedures and drawings. These procedures which represent the administrative control are reviewed to assure appropriate fire protection requirements are included such as: precautions; control of ignition sources and combustibles; and provisions for backup fire protection, if the activities require disabling a fire protection system.

TABLE 9.5A-1 (Sheet 17)

APCSB 9.5-1 Appendix A	WCGS
	The installation or application of penetration seals and fire retardant coatings are performed in accordance with manufacturer's instructions by personnel knowledgeable of these instructions. Measures exist to assure that instructions, procedures and drawings, including changes thereto, are properly reviewed, approved, issued and distributed.
3. <u>Control of Purchased Material, Equipment and Services</u>	
Measures should be established to assure purchased material equipment and services conform to the procurement documents.	Measures have been established to assure that purchased material, equipment and services conform to procurement documents. These measures include: 1. Supplier evaluation and selection as appropriate. Note that suppliers of fire protection materials and equipment are selected from vendors known to have the ability to supply commercially acceptable items. 2. Inspection or performance testing to verify that material, equipment and services pertaining to the site-related portions of the FPS conform to procurement documents. Inspections occur as receipt inspections, or installation inspections, or both as appropriate.
4. <u>Inspection</u>	
A program for independent inspection of	Maintenance and modifications of the FPS, including emergency

TABLE 9.5A-1 (Sheet 18)

APCSB 9.5-1 Appendix A	WCGS
activities affecting fire protection should be established and executed by, or for, the organization performing the activity to verify conformance with documented installation drawings and test procedures for accomplishing the activities.	lighting and normal plant communication equipment (plant telephone and PA system), are subject to inspection to assure conformance to design and installation requirements. Such inspections may occur as receipt inspection or installation inspection, or both as appropriate. The installation of the portions of the FPS where performance cannot be verified through preoperational tests, such as penetration seals, fire retardant coatings, cable routing and fire barriers is subject to inspection. Inspections are performed by either quality control or engineering personnel other than those who performed the activities being inspected and who are knowledgeable of fire protection design and installation requirements. These inspections are performed in accordance with procedures or checklists and shall include, as applicable, the following: a. Identification of items/activities being inspected. b. Individuals/organization responsible to perform inspections. c. Reference design documents and acceptance criteria. d. Identification of inspection method. e. Documentation requirements. f. Inspection results, inspector signoff.

TABLE 9.5A-1 (Sheet 19)

APCSB 9.5-1 Appendix A	WCGS
	The WCGS Fire Protection Program describes the program by which the elements of the FPS are inspected to assure they are in acceptable condition. For those materials subject to degradation (such as fire stops, seals and fire retardant coatings), periodic visual inspections are performed to assure they have not deteriorated or been damaged. Periodic inspections and/or tests are performed on the FPS, emergency breathing and auxiliary equipment, emergency lighting and normal plant communication equipment to assure acceptable condition of these items.
5. <u>Test and Test Control</u>	
A test program should be established and implemented to assure that testing is performed and verified by inspection and audit to demonstrate conformance with design and system readiness requirements. The tests should be performed in accordance with written test procedures; test results should be properly evaluated and acted on.	The WCGS Fire Protection Program describes the program developed to verify conformance with design following modification, repair or replacement of portions of the FPS. Also discussed is a program of periodic tests to verify system readiness requirements. The WCGS Fire Protection Program discusses training of personnel responsible for maintaining and inspecting the FPS. The programs for testing and training are subject to QA audit and surveillance. Tests results are documented, evaluated and their acceptability determined by qualified groups or individuals.

TABLE 9.5A-1 (Sheet 20)

APCSB 9.5-1 Appendix A	WCGS
6. <u>Inspection, Test and Operating Status</u>	
Measures should be established to provide for the identification of items that have satisfactorily passed required tests and inspections.	Measures are developed to identify those components that have satisfactorily passed required preoperational tests and inspections.
7. <u>Non-Conforming Items</u>	
Measures should be established to control items that do not conform to specified requirements to prevent inadvertent use or installation.	Fire protection system items, including emergency lighting and normal plant communication equipment items, that do not conform to specific requirements are identified during inspections and/or tests. Nonconforming items identified are appropriately segregated, tagged or labeled to prevent inadvertent use. Identification, documentation, segregation, review disposition and notification to the affected organization of nonconformances are procedurally controlled and include identification of individuals/ groups responsible for disposition of nonconforming items. Documentation of nonconforming items consists of identification, description, disposition and approval of disposition.
8. <u>Corrective Action</u>	
Measures should be established to assure assure that conditions adverse to fire protection, such as	Procedures have been established such that failures, malfunctions, deficiencies, deviations, defective components, uncontrolled combustible material and nonconformances

TABLE 9.5A-1 (Sheet 21)

APCSB 9.5-1 Appendix A	WCGS
failures, malfunctions, deficiencies, deviations, defective components, uncontrolled combustible material and noncon formances are promptly identified, reported and corrected.	which affect fire protection are promptly identified, reported, evaluated and corrected. The evaluation considers the cause of the condition and action to preclude recurrence.
9. <u>Records</u>	
Records should be prepared and maintained to furnish evidence that the criteria enumerated above are being met for activities affecting the Fire Protection Program.	Records are maintained in accordance with ANSI N45.2.9 to show the criteria committed to are being met for activities affecting the Fire Protection Program.
10. <u>Audits</u>	
Audits should be conducted and documented to verify compliance with the Fire Protection Program including design and procurement documents; instructions, procedures and drawings and inspection and test activities.	Audits are performed to verify compliance with the Fire Protection Program, including procedures, inspections and testing activities. Audits are conducted by QA personnel in accordance with written procedures or checklists. Audit results are documented and reviewed by supervisory

TABLE 9.5A-1 (Sheet 22)

APCSB 9.5-1 Appendix A	WCGS
	personnel responsible for correcting deficiencies revealed by the audit. Followup actions are then by responsible management to correct deficiencies identified during the audit.
	Audits of the Fire Protection Program are performed as Required by the Quality Program Manual, Section 18.
D. General Guidelines for Plant Protection	
D.1. Building Design	
(a) Plant layouts should be arranged to:	Where possible, plant layouts are arranged to:
(1) Isolate safety-related systems from unacceptable fire hazards, and	(1) Isolate safety-related systems from unacceptable fire hazards, and
(2) Separate redundant safety-related systems from each other so that both are not subject to damage from a single fire hazard.	(2) Separate redundant safe shutdown systems from each other so that both are not subject to damage from a single fire hazard.
Alternatives: (a) Redundant safety related systems that are subject to damage from a single fire hazard should be protected by a combination of fire detection and suppression systems, or (b) a separate system to perform the safety function should be provided.	Where this is not possible, protection is provided by fire resistive wraps, fire detection, fire suppression systems, or a combination of these. The details of plant layout features designed to meet these guidelines are given in Appendix 9.5B.
	The Appendix 9.5E comparison response to 10 CFR 50 Appendix R Section III.G provides additional information regarding the methodologies utilized for fire protection of safe shutdown capability.

TABLE 9.5A-1 (Sheet 23)

APCSB 9.5-1 Appendix A	WCGS
(b) In order to accomplish 1. (a) above, safety-related systems and fire hazards should be identified throughout the plant. Therefore a detailed fire hazard analysis should be made. The fire hazards analysis should be reviewed and updated as necessary. Additional fire hazards analysis should be done after any plant modification.	(b) Refer to Appendix 9.5B for the fire hazards analysis. The hazards analysis will be reviewed and updated, as necessary.
(c) For multiple reactor sites, cable spreading rooms should not be shared between reactors. Each cable spreading room should be separated from other areas of the plant by barriers (walls and floors) having a minimum fire resistance of 3 hours. Cabling for redundant safety divisions should be separated by walls having 3-hour fire barriers.	(c) Each CSR is separated from the other areas by walls, floor, and ceiling having a minimum fire resistance of 3 hours. Two CSRs are provided for each reactor unit. Cables for the two redundant pairs of shutdown divisions are routed separately into their respective CSR.
(d) Interior wall and structural components, thermal insulation materials and radiation shielding materials and soundproofing should be noncombustible. Interior finishes should be noncombustible or listed by a nationally recognized testing laboratory, such as Factory Mutual or Underwriters' Laboratory, Inc. for flame spread, smoke and fuel contribution of 25 or less in its use configuration (ASTM E-84 Test), "surface Burning Characteristics of building Materials").	(d) Interior wall and structural components are steel, reinforced concrete, and other noncombustible materials. Thermal insulation and radiation shielding materials are also noncombustible. Interior wall surfaces are generally painted CMU or concrete. Floor areas have also been coated. These paints and coatings have been considered in the fire hazards analysis. Minimum drywall construction is used in the control room over steel stud framing.

TABLE 9.5A-1 (Sheet 24)

APCSB 9.5-1 Appendix A	WCGS
	Control room carpet has a Class A flame spread rating as described in appendix 9.5B. Smoke and fuel contribution is not considered to be a significant factor with respect to fire protection within the control room, since this area is manned 24 hours/day.
(e) Metal deck roof construction should be noncombustible (see the building materials directory of the Underwriters Laboratory, Inc.) or listed as Class I by Factor Mutual system Approval Guide.	(e) Metal deck roof construction has not been utilized in safety-related structures, except as forms for the reinforced concrete roof; therefore, this guideline does not apply.
(f) suspended ceilings and their supports should be of noncombustible construction. Concealed spaces should be devoid of combustibles Adequate fire detection and suppression systems should be provided where full implementation is not practicable.	(f) Suspended ceilings are noncombustible and exist in the control room and adjacent offices, hot chem lab, counting room, and access control area. Combustibles in concealed spaces in the control room, hot chem lab and counting room consist only of insulation for electrical cables in trays which are not safety-related. Combustibles in concealed spaces in the access area consist of safety-related electrical cables in trays. This area is sprinkled both above and below the ceiling.

TABLE 9.5A-1 (Sheet 25)

APCSB 9.5-1 Appendix A	WCGS
(g) High voltage - high amperage transformers installed inside buildings containing safety-related systems should be of the dry type or insulated and cooled with noncombustible liquid.	(g) High voltage – high amperage transformers installed inside buildings containing safety related systems are not exposed to oil-filled transformers.
(h) Buildings containing safety related systems having opening in exterior walls closer than 50 feet to flammable oil-filled transformers, should be protected from the effects of fire by: ...	(h) Buildings containing safety-related systems having openings in exterior walls are not closer than 50 feet to flammable oil-filled transformers.
(i) Floor drains, sized to remove expected fire fighting water flow, should be provided in those areas where fixed water fire suppression systems are installed. Drains should also be provided in other areas where hand hose lines may be used if such fire fighting water could cause unacceptable or damage to equipment in the area. Equipment should be installed on pedestals, or curbs should be provided as required to contain water and direct it to floor drains. (See NFPA 92M, "Water-proofing and Draining of Floors.") Drains in areas containing preventing the spread of the fire throughout the drain system. Water drainage from areas which may contain radioactivity should be sampled and analyzed before discharge to the environment. In operating	(i) Adequate drainage is provided in all safe shutdown areas; including at each elevation of of vertical electrical cable chases, to remove fire fighting water whether from fixed suppression systems or manual hose stations. Water-sensitive equipment components are situated above the floor level to prevent damage from extinguishing system discharge. The drainage system has no provisions for arresting the spread of fire within the system. However, the only safe shutdown area where an appreciable amount of combustibles could enter the drainage system is in the diesel generator building. Each of the two redundant diesels has a separate drainage system

TABLE 9.5A-1 (Sheet 26)

APCSB 9.5-1 Appendix A	WCGS
plants or plants under construction, if accumulation of water from the operation of new fire suppression systems does not create unacceptable consequences, drains need not be installed.	so that a fire could not spread from one diesel room to the other. All drainage (except sanitary) is monitored for radio-activity before release to the environment.
(j) Floors, walls, and ceilings enclosing separate fire areas should have minimum fire rating of 3 hours. Penetrations in these fire barriers, including conduits and piping, should be sealed or closed to provide a fire-resistance rating at least equal to that of the fire barrier itself. Door openings should be protected with equivalent rated doors, frames, and hardware that have been tested and approved by a nationally recognized laboratory. Such doors should be normally closed and locked or alarmed with alarm and annunciation in the control room. Penetrations for ventilation system should be protected by a standard "fire door damper" where required. (Refer to NFPA 80, "Fire Doors and Windows.") The fire hazard in each area should be evaluated to determine barrier requirements. If barrier fire resistance cannot be made adequate, fire detection and suppression should be provided, such as:	(j) Where fire barriers are provided to separate redundant safe shutdown trains, floors, walls, and ceilings of the enclosures have a minimum fire rating of 3 hours. Refer to Section 9.5.1.2.2. Penetrations in these fire barriers, including conduits and piping, are sealed or closed to provide a fire resistance rating of 3 hours. Hatchways in the auxiliary building floors are protected as detailed in 9.5.1.1.2. Normally, doors, frames, and hardware have the same rating as the barrier. Elevator and dumbwaiter doors will be rated at 1-1/2 hours, since it is an industry standard and, as stated in ANSI A17.1, such doors are acceptable for use on a 2 hour rated shaft. For a fire to propagate from one floor elevation to another it would have to penetrate two doors.

TABLE 9.5A-1 (Sheet 27)

APCSB 9.5-1 Appendix A	WCGS
(i) water curtain in case of fire, (ii) flame retardant coatings, (iii) additional fire barriers.	Doors are normally closed and locked, except where the door is a means of egress in which case they are closed and latched. The door between the Pantry and Control Room is normally open. This door is provided with an electromagnetic closer which closes the door upon detection of fire. Ventilation openings are protected by fire dampers having a rating equal to the barrier. The fire hazard in each area has been evaluated to determine barrier requirements. This analysis is presented in Appendix 9.5B. Control building floors and ceilings are rated as 3-hour fire barriers. Three-hour-rated fire stops are provided at each floor elevation in vertical cable chases. Auxiliary building floors and ceilings are rated as 3-hour fire barriers. The roofs of the auxiliary and control buildings are not fire barriers. The area however, constructed of non-combustible concrete with built up Class A roofing. In addition the structural steel supporting the roof is protected with 3 hour rated fire proofing. Therefore, building structural integrity is maintained.
2. <u>Control of Combustibles</u>	
(a) Safety-related systems should be isolated separated from combustible materials. When this is not possible because of the nature of the safety system or the combustible material,	Safety-related systems are isolated or separated from combustible materials, where practical. Where this is not practical, special protection is

TABLE 9.5A-1 (Sheet 28)

APCSB 9.5-1 Appendix A	WCGS
should be provided to prevent a fire from defeating the safety system function. Such protection may involve a combination of automatic fire suppression and construction capable of with-standing and containing a fire that consumes all combustibles present. Examples of such combustible materials that may not be separable from the remainder of its system are:	provided to prevent failure of both safe shutdown trains by a single fire. Refer of both safe shut-down trains by a single fire Refer of Both safe shutdown trains by a to the fire Hazards Analysis, Appendix 9.5B. Administrative controls have been established to control the introduction of transient combustibles into the safety-related areas.
(1) Emergency diesel generator fuel oil day tanks	
(2) Turbine-generator oil and hydraulic control fluid systems	
(3) Reactor coolant pump lube oil system.	
(b) Bulk gas storage (either compressed or cryogenic), should not be permitted inside safety-related equipment. Storage of flammable gas such as hydrogen should be located outdoors or in separate detached buildings so that a fire or explosion does not adversely affect any safety-related systems or equipment. (Refer to NFPA 05A, "Gaseous Hydrogen Systems".) Care should be taken to locate high pressure gas storage containers with the long axis parallel to building walls. This minimizes the possibility	Flammable bulk gas storage is not permitted inside structures housing safe shutdown equipment as a design restriction. All bulk gas storage facilities structures housing are located outdoors

TABLE 9.5A-1 (Sheet 29)

APCSB 9.5-1 Appendix A	WCGS
of wall penetration in the event of a container failure. Use of compressed gases (especially flammable and fuel gases) inside buildings should be controlled. (Refer to NFPA 6, "Industrial Fire Loss Prevention")	
c) The use of plastic materials should be minimized. in particular, halogenated plastics such as polyvinyl chloride (PVC) and neoprene should be used only when substitute non-combustible materials are not available. All plastic materials, including flame and fire retardant materials, burn with an intensity and BTU production in a range similar to that of ordinary hydrocarbons. When burning, they produce heavy smoke that obscures visibility, and can plug air filters, especially charcoal and HEPA. The halogenated plastics also release free chlorine and hydrogen chloride when burning which are toxic to humans and corrosive to equipment.	Halogenated materials are used for electrical cable insulation and jacketing. These materials exhibit acceptable electrical, mechanical, and environmental characteristics. The material is minimized to the extent practicable by limiting the wall thickness to the minimum permitted by applicable industry standards. Insulating materials used for cables routed in cable trays are: (1) <u>5 and 15 Kv cable</u> insulation - Kerite HTK compound jacket – Kerite HTNS (5 Kv) and Kerite FR (15 Kv) (2) <u>600 V control cable</u> insulation - cross linked polyethylene jacket - Neoprene (3) <u>600 V Power and Instrumentation Cable</u> insulation - Ethylene-propylene rubber jacket - chlorosulfonated polyethylene
d) Storage of flammable liquids should, as a minimum, comply with the requirements of NFPA 30, "Flammable and Combustible Liquids Code".	Storage of Flammable liquids complies with the requirements of NFPA 30q-1973.

TABLE 9.5A-1 (Sheet 30)

APCSB 9.5-1 Appendix A	WCGS
3. <u>Electrical Cable Construction, Cable Trays and Cable Penetrations</u>	
a) Only non-combustible materials should be used for cable tray construction.	Galvanized steel is used for cable tray construction.
b) See Section E.3 for fire protection guidelines for cable spreading rooms.	See Section E.3.
c) Automatic water sprinkler systems should be provided for cable trays outside the cable spreading room. Cables should be designed to allow wetting down with deluge water without electrical faulting. Manual hose stations and portable hand extinguishers should be provided as backup. Safety-related equipment in the vicinity of such cable trays does not itself require water fire protection but is subject to unacceptable damage from sprinkler water discharge, should be protected from sprinkler system operation or malfunction.	Automatic sprinkler systems are provided for vertical cable chases, the cable area above the suspended ceiling in the access control area which contain Class 1E cables, and zones in the auxiliary building with cable concentrations. Manually charged, closed head sprinkler systems are provided for the two cable penetration areas inside the containment. Cables are designed to allow wetting down without electrical faulting. Manual hose stations and portable hand extinguishers are provided as backup. Sprinkler systems are not installed in areas where sprinkler operation would cause damage to safe shutdown equipment.
When safety-related cables do not satisfy the provisions of Regulatory Guide 1.75, all exposed cables should be covered with an approved fire retardant coating and a fixed automatic water fire suppression system should be provided.	Safety-related cables satisfy the provisions of Regulatory Guide 1.75. Safety-related fire-resistive cables exceed the intent of the provisions of Regulatory Guide 1.75.

TABLE 9.5A-1 (Sheet 31)

APCSB 9.5-1 Appendix A	WCGS
d) Cable and cable tray penetration of fire barriers (vertical and horizontal) should be sealed to give protection at least equivalent to that fire barriers for horizontal and vertical cable trays should, as a minimum, meet the requirements of ASTM E 119, "Fire Test of Building Construction and Materials," in cluding the hose stream test. Where installed penetration seals are deficient with respect to fire resistance, these seals may be protected by covering both sides with an approved fire retardant material. The adequacy of using such material should be demonstrated by suitable testing.	Cable and cable tray penetration of fire barriers (vertical and horizontal) are sealed to give protection at least equivalent to the barrier which they penetrate. Typical horizontal and vertical cable tray penetrations are tested to prevent the spread of fire and retain structural soundness when exposed to a 3-hour fire as discussed in 9.5.1.2.2.
e) Fire breaks should be provided as deemed necessary by the fire hazards analysis. Flame or fire retardant coatings may be used as a fire break for grouped electrical	Fire breaks are provided as deemed necessary by the fire hazards analysis. The cable rating is compatible with the construction of the fire break. Refer to Appendix 9.5B and Section 9.5.1.2.2.

TABLE 9.5A-1 (Sheet 32)

APCSB 9.5-1 Appendix A	WCGS
cables to limit spread of fire in cable ventings. (Possible cable derating owing to use of such coating materials must be considered during design.)	
f) Electrical cable constructions should as a minimum pass the current IEEE No. 383 flame test. (This does not imply that cables passing this test will not require additional fire protection.)	Safety-related electrical cable passes the IEEE 383-1974 flame test or meet the intent of this requirement as discussed in Appendix 9.5B. Fire-resistive cables are constructed from non-flammable materials: silicon dioxide insulation, copper nickel conductors and stainless steel jacketing, and are tested to exceed any flame test requirements of IEEE 383.
For cable installation in operating plants and plants under construction that do not meet the IEEE No. 383 flame test requirements, all cables must be covered with an approved flame retardant coating and properly derated.	
g) To the extent practical, cable construction that does not give off corrosive gases while burning should be used. (Applicable to new cable installations.)	See response to D.2(c) above.

TABLE 9.5A-1 (Sheet 33)

APCSB 9.5-1 Appendix A	WCGS
h) Cable trays, raceways, conduit, trenches, or culverts should be used only for cables. Miscellaneous storage should not be permitted, nor should piping for flammable or combustible liquids or gases be installed in these areas. Installed equipment in cable tunnels or culverts need not be removed if they present no hazard to cable runs as determined by the fire hazards analysis.	Cable trays, raceways, conduit, and cable trenches are used for the routing of cables only.
i) The design of cable tunnels, culverts, and spreading rooms should provide for automatic or manual smoke venting as required to facilitate manual fire fighting capability.	Smoke venting is discussed in Section D.4(a).
j) Cables in the control room should be kept to the minimum necessary for operation of the control room. All cables entering the control room should terminate	Cable in the control room is limited to that necessary for control room operation. Cables entering the control room terminate there. Floor trenches provide for cabling access to the operators console and other panels from the upper CSR.

TABLE 9.5A-1 (Sheet 34)

APCSB 9.5-1 Appendix A	WCGS
there. Cables should not be installed in floor trenches or culverts in the control room. Existing cabling installed in concealed floor and ceiling spaces should be protected with an automatic total flooding Halon system.	Cable trenches are provided with fixed automatic total flooding Halon systems.
4. <u>Ventilation</u>	
a) The products of combustion that need to be removed from a specific fire area should be evaluated to determine how they are controlled. Smoke and corrosive gases should generally be automatically discharged directly outside to a safe location. Smoke and gases containing radioactive materials should be monitored in the fire area to determine if release to the environment is within the permissible limits of the plant Technical Specifications. The products of combustion which need to be removed from a specific	Fire and smoke are automatically isolated in all areas of the auxiliary, radwaste, fuel, and control buildings by the fusible link actuated fire dampers in all rated fire barrier walls or by remote manual operations of area ventilation systems. Indivdidual area of the control building can be isolated from the normal supply and exhaust HVAC system by control switches in the control room. All exhaust fans, with the exception of the control building fans, are centrifugal with the motor located outside of the airstream, thus making them less susceptible to high gas temperatures. The fans are capable of processing air of temperatures at least as high as the fusible link melting temperature (160 F) of the fire dampers. The control building exhaust fans are vaneaxial with the motors located in the process airstream. The fan

TABLE 9.5A-1 (Sheet 35)

APCSB 9.5-1 Appendix A	WCGS
fire area should be evaluated to determine how they are controlled.	motor is designed for a minimum 150 F temperature rise. Since the exhaust fans are all downstream of the system filter units, they are not subject to damage from high temperature particles. The auxiliary building and fuel building can be exhausted by either the normal building system or the emergency (Class IE) system. The control building and reactor building can be exhausted by the normal system which is located remotely to the hazard. The diesel building utilizes the exhaust air flow path, including dampers as the means of heat and smoke venting and takes no credit for mechanical exhaust. For areas which have a potential for radioactivity, such as the radwaste building, releases are through normal (or emergency) process points which are monitored for radioactivity releases.
b) Any ventilation system designed to exhaust smoke or corrosive gases should be evaluated to ensure that inadvertent operation or single failures does not violate the controlled areas of the plant design. This requirement includes containment functions for protection of	There are no fans provided specifically for the function of smoke exhaust. The normal and/or emergency exhaust fans may be used for the purpose. This arrangement limits plant releases through normal process points, thus eliminating inadvertent releases to the environment.

TABLE 9.5A-1 (Sheet 36)

APCSB 9.5-1 Appendix A	WCGS
the public and maintaining habitability for operations personnel.	
c) The power supply and controls for mechanical ventilation systems should be run outside the fire area served by the system.	The power cables for exhaust fans are physically separated for Class IE fans. The non-IE exhaust fans for the reactor and control buildings are located in the auxiliary building. The diesel building utilizes the exhaust air flow path, including dampers, as the means of heat and smoke venting and takes no credit for mechanical exhaust. The control cable for isolation dampers may be located within the fire area.
d) Fire supression systems should be installed to protect charcoal filters in accordance with Regulatory Guide 1.52, "Design Testing and Maintenance Criteria for Atmospheric Cleanup Air Filtration."	The charcoal adsorbers are sized for iodine loadings of 2.5 mg/gm. Where this loading may be approached, a low-flow air-bleed system is provided per Regulatory Guide 1.52. In addition, each charcoal adsorber unit is equipped with a high temperature detection system which alarms in the control room and a manually activated water spray system for the charcoal bed.
e) The fresh air supply intakes to areas containing safety-related equipment or systems should be located remotely from the exhaust air outlets and smoke vents of other fire areas	Exhausts from safety-related buildings, except the diesel and control buildings, are through the unit vent. The diesel building takes suction and discharges through a penthouse which has the louvers separated by 36 feet and located on opposite sides of the structure. The control building exhaust is

TABLE 9.5A-1 (Sheet 37)

APCSB 9.5-1 Appendix A	WCGS
to minimize the possibility of contaminating the intake air with the products of combustion.	located approximately 30 feet away from the auxiliary building intake. The control building takes its intake air from the auxiliary building intake.
Stairwells should be designed to minimize smoke infiltration during a fire. Staircases should serve as escape routes and access routes for fire fighting. Fire exit routes should be clearly marked. Stairwells, elevators, and chutes should be enclosed in masonry towers with minimum fire rating of 3 hours and automatic fire doors, at least equal to the enclosure construction, at each	Stairwells which serve as escape routes and access routes for fire fighting are enclosed in reinforced masonry towers with a fire rating of 3 hours. Stairwell doors have a 3 hour fire rating in seismic Category I buildings. In non-seismic Category I buildings, stairwell doors have a 1 ½ hour rating. Fire preplans and drills are performed to provide escape and access routes for all areas. Elevators are enclosed in reinforced masonry towers with doors rated for 1-1/2 hours, B label.
opening into the building. Elevators should not be used during fire emergencies. Where stairwells or elevators cannot be enclosed in 3-hour fire-rated barrier with equivalent fire doors, escape and access routes should be established by pre-fire plan and practiced in drills by operating and fire brigade personnel.	The stairwell in the communications corridor is enclosed in a masonry tower with a 2 hour fire rating. The reactor building elevator and stairs are not enclosed but preestablished escape routes are used.

TABLE 9.5A-1 (Sheet 38)

APCSB 9.5-1 Appendix A	WCGS
g) Smoke and heat vents may be useful in specific areas such as cable spreading rooms and diesel fuel oil storage areas and switch-gear rooms. When natural-convection ventilation is used, a minimum ratio of 1 foot2 of venting area per 200 foot2 of floor area should be provided. If forced-convection ventilation is used, 300 CFM should be provided for every 200 foot2 of floor areas. See NFPA No. 204 for additional guidance or smoke control.	Heat and smoke venting for each diesel generator room is provided by utilizing the exhaust air flow path. The free area of the exhaust air flow path provides at least 1.0 square feet of venting area for each 200 square feet of floor area. Smoke exhaust fans per se are not employed. Normal ventilation exhaust systems are utilized throughout for smoke removal.
h) Self-contained breathing apparatus, using full face positive pressure masks, approved by NIOSH (National Institute for Occupational Safety and Health-approval formerly given by the U.S. Bureau of Mines) should be provided for fire brigade, damage control and control room personnel. Control room personnel may be	Refer to Table 9.5E-1 comparison to 10CFR50 appendix R, Section III.H, for discussion of emergency breathing air equipment and supply.

TABLE 9.5A-1 (Sheet 39)

APCSB 9.5-1 Appendix A	WCGS
furnished breathing air by a manifold system piped from a storage reservoir if practical.	
Service or operating life should be a minimum of one half hour for the self-contained units.	
At least two extra bottles should be located onsite for each self-contained breathing unit. In addition, an on-site 6-hour supply of reserve air should be provided and arranged to permit quick and complete replenishment of exhausted supply air bottles as they are returned. If compressors are used as a source of breathing air, only units approved for breathing air should be used. Special care must be taken to locate the compressor in areas free of dust and contaminants.	

TABLE 9.5A-1 (Sheet 40)

APCSB 9.5-1 Appendix A	WCGS
i) Where total flooding gas extinguishing systems are used, area intake and exhaust ventilation dampers should close upon initiation of gas flow to maintain necessary gas concentration. (See NFPA 12, "Carbon Dioxide Systems", and 12A, "Halon 1301 Systems.")	Ventilation systems serving areas protected by Halon 1301 are provided with isolation capabilities. The area is isolated either by positive closure dampers or by stopping the ventilation system fan. Closure is initiated automatically upon detector actuation.
5. <u>Lighting and Communication</u>	
Lighting and two way voice communication are vital to safe shutdown and emergency response in the event of fire. Suitable fixed and portable emergency lighting and communication devices should be provided to satisfy the following requirements:	
a) Fixed emergency lighting should consist of sealed beam units with individual 8-hour minimum battery power supplies.	Fixed emergency lighting consists of sealed beam units with individual 8-hour minimum battery power supplies.
b) Suitable sealed beam battery powered portable hand lights should be provided for emergency use.	Suitable sealed beam battery powered portable hand lights are provided for emergency use.

TABLE 9.5A-1 (Sheet 41)

APCSB 9.5-1 Appendix A	WCGS
c) Fixed emergency communication should use voice powered head sets at pre-selected stations.	Fixed emergency communication is available by use of the plant wide public address system. The PA system is supplied power from two separate sources (see section 9.5.2.2.1).
d) Fixed repeaters installed to permit use of portable radio communication units should be protected from exposure fire damage.	The radio system repeater located at elevation 2061'6" in the Communication Corridor is protected from exposure fire damage.
E. Fire Detection and Suppression	
1. Fire Detection	
a) Fire detection systems should, as a minimum, comply with NFPA 72D, "Standard for the Installation, Maintenance, and Use of Proprietary Protective Signaling Systems." Deviations from the requirements of NFPA 72D should be identified and justified.	The fire detection system complies with NFPA 72D-1975 for Class A systems as detailed in 9.5.1.2.2.2 with the following exceptions. Supervision of the fire protection panel is not the primary function of the plant operator assigned to monitoring the panel. Since there are few and infrequent signals to this panel, a fulltime supervisor is not justified. Supplemental to the requirements of NFPA 72D, Class A, the following provisions are made: (1) All initiating device circuits (detection circuits) which actuate automatic suppression systems serving safe shutdown areas of the plant

TABLE 9.5A-1 (Sheet 42)

APCSB 9.5-1 Appendix A	WCGS
	are designed to perform their detection functions in the event of a single break or single ground fault in the circuits. For systems such as Halon extinguishing systems which are actuated by two zones of detection in the same hazard area, each zone is not designed to maintain detection capabilities during a single ground fault or break. Upon generation of a trouble signal in one of the fire detection zones, a trouble alarm is sent to the control room. In this condition, the system automatically discharges the Halon on receipt of an alarm signal from the second zone of detection.
	(2) Upon receipt of a trouble signal on the fire annunciation panel in the control room, a runner is dispatched immediately to the respective zone to investigate the cause of the trouble signal.
b) Fire detection system should be audible and visual alarm and annunciation in the control room. Local audible alarms should also sound at the location of the fire.	The detection system gives audible and visual alarm and annunciation in the control room and locally.

TABLE 9.5A-1 (Sheet 43)

APCSB 9.5-1 Appendix A	WCGS
c) Fire alarms should be distinctive and unique. They should not be capable of being confused with any other plant system alarms.	Fire alarms are distinctive and unique. Horn and bell-type alarms are used in both the control room and locally.
d) Fire detection and actuation systems should be connected to the plant emergency power supply.	The detection and actuation systems are connected to the non-Class IE dc system which is backed by a battery charger supplied from the plant emergency power supply as described in 9.5.1.2.2.2.
2. <u>Fire Protection Water Supply Systems</u>	
a) An underground yard fire main loop should be installed to furnish anticipated fire water requirements. NFPA 24-Standard for Outside Protection - gives necessary guidance for such installation. It references other design codes and standards developed by such organizations as the American National Standards Institute (ANSI) and the American Water Works Association (AWWA). Lined steel or cast iron pipe should be used to reduce	An underground yard fire main loop is provided to furnish the design fire water requirements of the power block and various site structures. The underground yard loop piping, valves, hydrants, etc., conforms to NFPA 24. Lined ductile-iron pipe, in accordance with ANSI A21.51 (AWWA C151) is used. The piping system may be flushed through normal system operation. If required, chemical treatment of the system may be accomplished by injection of chemicals into the pump suction area or through other designated points to control corrosion and organic fouling. Approved visually indicating (post indicator) sectional control valves are provided to isolate portions of the underground yard firemain loop. Eighteen (18) sectional control valves have been placed in underground pits. These valves are located within the Security System Isolation Zone.

TABLE 9.5A-1 (Sheet 44)

APCSB 9.5-1 Appendix A	WCGS
internal tuberculation. Such tuberculation deposits in an unlined pipe over a period of years can significantly reduce water flow through the combination of increased friction and reduced pipe diameter. Means for treating and flushing the systems should be provided. Approved visually Indicating sectional control valves, such as Post Indicator Valves, should be provided to isolate portions of the main for maintenance or repair without shutting off the entire system.	The underground yard fire main loop piping is separate from the service water and sanitary water system piping. The service water system and FPS are interconnected, however, as one fire protection jockey pump takes suction from the service water system, a second submersible jockey pump takes suction from the 'A' CWSH bay. Only one jockey pump is required to operate to maintain fire water system pressure. (See Figure 9.5-1).
The fire main system piping should be separate from service or sanitary water system piping.	In addition to the standard fire suppression uses, the system is used as a source of water for fire brigade training and as a back up source of raw water for plant safe shut down for design basis accidents other than fire.
b) Multi Unit Site Fire Mains	Not applicable.
c) If pumps are required to meet	Two 100% capacity fire pumps, one electric motor driven, and one

TABLE 9.5A-1 (Sheet 45)

APCSB 9.5-1 Appendix A	WCGS
system pressure or flow requirements, a sufficient number of pumps should be provided so that 100% capacity is available with one pump inactive (e.g., three 50% pumps or two 100% pumps). The connection to the yard fire main loop from each fire pump should be widely separated, preferably located on opposite sides of the plant.	diesel engine driven are provided. The underground yard loop is supplied by two 12-inch diameter pipes which are separated by a distance of approximately 30 feet. This distance is based on a recommendation by ANI. Each fire pump is provided with independent power supplies and controller. The motor-driven fire pump is located within the general equipment area of the circulating water screenhouse and not within a separate room. The general equipment area of the screenhouse also contains the fire protection jockey pumps, service water pumps, strainers, air compressors, and other related equipment. (See Figure 10.4-2)
Each pump should have its own driver with independent power supplies and control. At least one pump (if not powered from the emergency diesels) should be driven by non-electrical means, preferably diesel engine. Pumps and drivers should be located in rooms separated from the remaining pumps and equipment by a minimum three-hour fire wall. Alarms indicating	The electrical equipment associated with the above equipment is located within a separate room provided with three hour rated fire barriers. Thus the general equipment area of the screenhouse does not contain combustible materials and no separation for the motor driven fire pump is deemed necessary. The diesel engine driven fire pump is located within a room enclosure. The west wall of this room, which is between the two fire pumps, is a three hour rated fire barrier. Each fire pump is individually alarmed in the Main Control Room to indicate pump running, driver availability and failure to start. In addition, the diesel driven fire pump has a general alarm in the Main Control Room to indicate system failure (overspeed, water temperature, air damper switch,

TABLE 9.5A-1 (Sheet 46)

APCSB 9.5-1 Appendix A	WCGS
pump running, driver availability, or failure to start should be provided in the control room.	crank termination and oil pressure), low fuel and battery failure.
Details of the fire pump installation should as a minimum conform to NFPA 20, "Standard for the Installation of Centrifugal Fire Pumps".	The fire pump installation conforms to NFPA 20.
d) Two separate reliable water supplies should be provided. If tanks are used, two 100% (minimum of 30,000 gallons each) system capacity tanks should be installed. They should be so interconnected that pumps can take suction from either or both. However, a leak in one tank or its piping should not cause both tanks to drain. The main plant fire water supply capacity should be capable of refilling either tank in a minimum of eight hours. Common tanks are	(See Item E.2.f)

TABLE 9.5A-1 (Sheet 47)

APCSB 9.5-1 Appendix A	WCGS
permitted for fire and sanitary or service water storage. When this is done, however, minimum fire water storage requirements should be dictated by means of a vertical standpipe for other water services.	
e) The fire water supply (total capacity and flow rate) should be calculated on the basis of the largest expected flow rate for a period of two hours, but not less than 300,000 gallons. This flow rate should be based (conservatively) on 1,000 gpm for manual hose streams plus the greater of: 1) all sprinkler heads opened and flowing in the largest designed fire area; or 2. the largest open head deluge system(s) operating.	The FPS flow rate and pressure requirements are determined based on the maximum demand of the power block. The flow requirements are based on providing 500 gpm for manual hose streams.

TABLE 9.5A-1 (Sheet 48)

APCSB 9.5-1 Appendix A	WCGS
f) Lakes or fresh water ponds of sufficient size may qualify as sole source of water for fire protection, but require at least two intakes to the pump supply. When a common water supply is permitted for fire protection and the ultimate heat sink, the following conditions should also be satisfied:	The source of water for fire protection is the Wolf Creek lake. The fire pumps take suction from a common wet pit sump in the circulating water screenhouse. Two vertical traveling screens and a bar grill are located at the inlet to the sump serving the fire pumps. An open pipe connection to the adjacent sump in the circulating water screenhouse is provided as a second source of water to the fire pumps and to preclude dewatering of the sump serving the fire pumps. There are four 12-inch diameter pipe connections between the fire pump screenhouse sump and the adjacent circulating water screenhouse sump, as shown in Figure 10.4-1-05.
1) The additional fire protection water requirements are designed into the total storage capacity; and	In the event of blockage of water flow into the fire pump sump through the traveling screens in one bay, one connection between adjacent bays and one operational traveling screen is all that is required to provide an adequate source of water from the adjacent bay to a fire pump running at 100% capacity at the cooling lakes' lowest design level.
2) Failure of the fire protection system should not degrade the function of the ultimate heat sink.	The 5,090 acre Wolf Creek lake is adequate to provide fire protection water storage as well as cooling water. The FPS does not take water from the ultimate heat sink.

TABLE 9.5A-1 (Sheet 49)

APCSB 9.5-1 Appendix A	WCGS
g) Outside manual hose installation should be sufficient to reach any location with an effective hose stream. To accomplish this hydrants should be installed approximately every 250 feet on the yard main system. The lateral to each hydrant from the yard main should be controlled by a visually indicating or key operated (curb) valve. A hose house, equipped with hose and combination nozzle, and other auxiliary equipment recommended in NFPA 24, "Outside Protection", should be provided as needed but at least every 1,000 feet. Threads compatiblewith those used by local fire departments should be provided on all hydrants, hose couplings and standpipe risers.	Hydrants with hose houses equipped with hose and combination nozzle and other auxiliary equipment recommended in NFPA 24, are located approximately every 250 feet on the yard main system. The lateral from the yard main to each hydrant is provided with a curb valve. Threads on all hydrants, hose couplings, and standpipe risers are compatible with those used by the fire departments of Coffey County, Kansas and Emporia (Lyon County), Kansas.

TABLE 9.5A-1 (Sheet 50)

APCSB 9.5-1 Appendix A	WCGS
3. <u>Water Sprinklers and Hose Standpipe Systems</u>	
a) Each automatic sprinkler system and manual hose station standpipe should have an independent connection to the plant underground water main. Headers fed from each end are permitted inside buildings to supply multiple sprinkler and standpipe systems. When provided, such headers are considered an extension of the yard main system. The header arrangement should be such that no single failure can impair both the primary and backup fire protection systems.	The sprinkler systems (both manual and automatic) are supplied from a header which is fed from each end. A separate header, also fed from both ends, is provided for all standpipes except the reactor building. The header arrangement is such that no single failure can impair both the sprinkler systems and the standpipe system. For reactor building system arrangement and single failure discussion, refer to Figure 9.5.1-1 and Section 9.5.1.2.
Each sprinkler and standpipe system should be equipped with OS&Y (outside screw and yoke) gate valve, or other approved shutoff valve, and water flow alarm. Safety-related equipment that does not itself require sprinkler water fire protection, but is subject to unacceptable damage if wetted by sprinkler water discharge should be protected by water shields or baffles.	Each sprinkler and standpipe system is equipped with OS&Y gate valves to isolate the system. Individual automatic sprinkler systems are equipped with water flow alarms. Water flow in the standpipe system is indicated by fire pump annunciation. Where sprinkler systems are required in the vicinity of water-sensitive safe shutdown equipment, preaction-type sprinkler systems are installed. In no case are water extinguishing systems installed such that both safe shutdown trains would be damaged by system discharge or malfunction.

TABLE 9.5A-1 (Sheet 51)

APCSB 9.5-1 Appendix A	WCGS
b) All valves in the fire water systems should be electrically supervised. The electrical supervision signal should indicate in the control room and other appropriate command locations in the plant (See NFPA 26, "Supervision of Valves".)	Shutoff valves for each power-block fixed extinguishing system and each main fire protection system header are electrically supervised. Standpipe isolation valves are locked in the open position. All other power block valves (drain, vent, and hose valves) are not supervised. The fire protection yard loop isolation and yard loop branch isolation valves are electrically supervised with indication on the fire protection panel in the Main Control Room, or are administratively controlled as discussed below.
When electrical supervision of fire protection valves is not practicable, an adequate management supervision program should be provided. Such a program should include locking valves open with strict key control; tamper proof seals; and periodic, visual check of all valves.	For those control and sectionalizing valves in the FPS that are not electrically supervised, an administrative control has been developed to implement procedures addressing control of locked or sealed valves and periodic surveillance of valves which are not locked or sealed.
c) Automatic sprinkler systems should, as a minimum, conform to requirements of appropriate standards such as NFPA 13, "Standard for the Installation of Sprinkler Systems," and NFPA 15 "Standard for Water Spray Fixed Systems."	Automatic water extinguishing systems are designed, constructed, and tested based on NFPA 13-1975 and 15-1973, as applicable.

TABLE 9.5A-1 (Sheet 52)

APCSB 9.5-1 Appendix A	WCGS
d) Interior manual hose installation should be able to reach any location ith at least one effective hose stream. To accomplish this, standpipes with hose connections equipped with a maximum of 75 feet of 1-1/2-inch woven-jacket-lined fire hose and suitable nozzles should be equipped with 75 feet of 1-1/2 provided in all buildings, including containment, on all floors and should be spaced at not more than 100-foot intervals. Individual standpipes should be of at least 4-inch diameter for multiple hose connections and 2-1/2-inch diameter for single hose connections. These systems Should follow the requirements of NFPA No. 14 for Sixing, spacing, and pipe support Requirements	Interior hose stations are capable of reaching all accessible areas of the plant, including inside the reactor building, with an effective hose stream. In addition, a fire in the immediate vicinity of a hose station can be extinguished, using an adjacent hose station. All hose stations, except the hose stations protecting the diesel generator rooms and cable spreading rooms and the north end of Corridor No. 2, Room 1408, of the Aux Building Elevation 2026, are equipped with 75 feet of 1-1/2" inch woven jacket, lined fire hose and adjustable nozzles. The hose stations protecting the diesel generator rooms and cable spreading rooms are equipped with 100 feet of hose to provide effective coverage for all accessible areas. The hose stations at the North end of Corridor No. 2 are also equipped with 100 feet of hose to facilitate actions required by Emergency Procedures in the event of a loss of all AC power The hose stations are spaced at not more than 100 feet from an adjacent hose station. Standpipe risers are of at least 4-inch diameter for multiple hose connections. The standpipe system is based on NFPA 14-1976.
Hose stations should be located outside entrances to normally unoccupied areas and inside normally occupied areas.	Hose stations are located outside entrances to normally occupied areas and inside normally occupied and unoccupied areas, where possible. All hose stations are equipped with pressure reducing devices where required by code. Standpipe isolation valves are located outside of safe shutdown equipment areas, where possible.

TABLE 9.5A-1 (Sheet 53)

APCSB 9.5-1 Appendix A		WCGS
	Standpipes serving hose stations in areas housing safety-related equipment should have shutoff valves and pressure reducing devices (if applicable) outside the area.	
e)	The proper type of hose nozzles to be supplied to each area should be based on the fire hazard analysis. The usual combination spray/ straight-stream nozzle may cause unacceptable mechanical damage (for example, the delicate electronic equipment in the control room) and be unsuitable. Electrically safe nozzles should be provided at locations where electrical equipment or cabling is located.	Either a combination spray/ straight stream nozzle or a spray nozzle is provided for interior hose stations. The hose stations are utilized by fire brigade personnel only, who are trained to apply the appropriate spray pattern commensurate with the electrical hazard and fire severity.
f)	Certain fires such as those involving flammable liquids respond well to foam suppression. Considerations should be given to use of any of the available foams	No foam extinguishing systems are provided in the power block buildings. The fuel oil storage tank is provided with a dry-pipe mechanical type foam extinguishing system.

TABLE 9.5A-1 (Sheet 54)

APCSB 9.5-1 Appendix A	WCGS
for such specialized protection application. These include the more common chemical and mechanical low-expansion foams, high-expansion foam, and the relatively new aqueous film-forming foam (AFFF).	
4. <u>Halon Suppression Systems</u>	
The use of Halon fire extinguishing agents should, as a minimum, comply with the requirements of NFPA 12A and 12B, "Halogenated Fire Extinguishing Agent Systems - Halon 1301 and Halon 1211." Only UL or FM approved agents should be used. In addition to the guidelines of NFPA 12A and 12B, preventative maintenance and testing of the systems, including check weighing of the Halon cylinders should be done at least quarterly.	Halon extinguishing systems are based on NFPA 12A-1973. Only approved agents are used. Each Halon system is capable of attaining a 5-percent minimum concentration. Each system is designed to maintain a 5-percent minimum concentration at the highest combustible material in the hazard area for 10 minutes. (Refer to Sections 9.5.1.2.2.1 and 9.5.1.2.3)
	The system actuation is by a cross-zoned, ionization-type detection system. Detection by the first zone alarms locally and in the control room. Detection by both zones will sound a local horn, close required dampers, shut off

TABLE 9.5A-1 (Sheet 55)

APCSB 9.5-1 Appendix A	WCGS
	associated ventilation and/or air conditioning fan motors, and discharges after a time delay for personnel evacuation. A momentary contact abort switch is provided in each local panel to delay the discharge for evacuation purposes. Each local control panel has a separate key lock switch to disable system controls during maintenance operations. At such times, the system indicates "trouble" on the annunciator panel in the control room. A 100-percent reserve bank is provided for each Halon system. The Halon systems are maintained and tested based on NFPA 12A-1973.
Particular consideration should also be given to: a) minimum required Halon concentration and soak time b) toxicity of Halon c) toxicity and corrosive characteristics of thermal decomposition products of Halon.	The Halon system design and application considered concentration and soak time; toxicity and corrosive characteristics.
5. <u>Carbon Dioxide Suppression System</u>	
The use of carbon dioxide extinguishing systems should as a minimum comply with the requirments of NFPA 12, "Carbon Dioxide Extinguishing Systems."	No carbon dioxide extinguishing systems are used in the power-block buildings.

TABLE 9.5A-1 (Sheet 56)

APCSB 9.5-1 Appendix A	WCGS
6. Portable Extinguishers	
Fire extinguishers should be provided in accordance with guidelines of NFPA 10 and 10A, "Portable Fire Extinguishers Installation, Maintenance and Use." Dry chemical extinguishers should be installed with due consideration given to cleanup problems after use and possible adverse effects on equipment installed in the area.	Fire extinguishers are provided based on NFPA 10-1975. (10A has been dropped from the NFPA Codes.) All extinguishers are installed with consideration given to cleanup problems and adverse effects to equipment in the hazard area.
F. Guidelines for Specific Plant Areas	
1. Primary and Secondary Containment	
a) Normal Operation	The lubricating oil system for each reactor coolant pump is provided with enclosures and drip collection pans to contain and drain away from the pump any leakage from this system.
Fire protection requirements for the primary and secondary containment areas should be provided on the basis of specific identified hazards. For example: - Lubricating oil or hydraulic fluid system for the primary coolant pumps	High pressure portions of the lube oil system are totally enclosed with low point drain connections. Low pressure portions of the system are provided with drip pans with low point connections. Remote lube oil fill lines for the upper and lower bearing reservoirs on each reactor coolant pump motor are not protected by drip pans. Due to the design of the fill lines, no lube oil leakage is postulated. The RTD Conduit Boxes (3 per motor) are not provided with drip pans, however, conduit seals and leak tight fittings are used to minimize lube oil leakage. Oil leakage at the RDT Conduit Box does not represent a fire hazard. All low point connections are piped to a remote oil collection tank (greater than 300-gallon tank for each two reactor

TABLE 9.5A-1 (Sheet 57)

APCSB 9.5-1 Appendix A	WCGS
- Cable tray arrangements and cable penetrations - Charcoal filters Fire suppression systems should be provided based on the fire hazards analysis. Fixed fan suppression capability should be provided for hazards that could jeopardize safe plant shutdown. Automatic sprinklers are preferred.	coolant pumps - each pump lube oil system holds 265 gallons of oil) located inside the reactor building. The tanks have level indication and level alarm annunciation in the control room. The tank vent is equipped with a flame arrestor. Refer to Figure 9.5.1-3 for the general arrangement of the oil collection system. The location of cable trays in the vicinity of the reactor coolant pumps is also indicated in Figure 9.5.1-3. A description of the Class 1E cable trays in the vicinity of the reactor coolant pumps is described in Appendix 9.5B. The cable penetration areas in the reactor building are protected by a remote, manually actuated preaction sprinkler system. A detection system is provided for the Class 1E cable trays in the reactor building.
b) <u>Refueling and Maintenance</u>	
Refueling and maintenance operations in containment may introduce additional hazards such as contamination control materials, decontamination supplies, wood planking, temporary wiring, welding and flame cutting (with portable compressed fuel gas	Management procedures and controls necessary to assure adequate fire protection during refueling or maintenance are discussed in Items B.3 and B.3.a).

TABLE 9.5A-1 (Sheet 58)

APCSB 9.5-1 Appendix A	WCGS
supply). Possible fires would not necessarily be in the vicinity of fixed detection and suppression systems.	
Management procedures and controls necessary to assure adequate fire protection are discussed in Section 3a.	
In addition, manual fire-fighting capability should be permanently installed in containment. Standpipes with hose stations and portable fire extinguishers should be installed at strategic locations throughout containment for any required manual fire-fighting operations.	Standpipes with hose stations and portable fire extinguishers are located to protect all areas with fixed combustible materials.
Adequate self-contained breathing apparatus should be provided near the containment entrances for fire-fighting and damage control personnel. These units should be independent of any breathing apparatus or air supply systems provided for general plant activities.	Self-contain breathing apparatus are available for use inside the containment. They are stored near the entrance of the RCA.

TABLE 9.5A-1 (Sheet 59)

APCSB 9.5-1 Appendix A	WCGS
2. Control Room	
The control room is essential to safe reactor operation. It must be protected against disabling fire damage and should be separated from other areas of the plant by floors, walls, and roofs having minimum fire resistance rating of 3 hours.	The control room is separated from other areas of the plant by 3-hour-rated walls, floor, and ceiling.
Control room cabinets and consoles are subject to damage from two fire hazards: a) Fire originating within a cabinet or console; and b) Exposure fire involving combustibles in the general room area.	
Hose stations adjacent to the control room with portable extinguishers in the control room are acceptable. Nozzles that are compatible with the hazard and equipment in the control room should be provided for the manual hose station. The nozzels chosed should satisfy actual fire-fighting needs, satisfy electrical safety, and minimize physical damage to electrical equipment from hose stream impingement.	Hose stations for the control room are located in the foyer and vestibule area just outside the control room. Portable extinguishers are located within the room. Hose stations are equipped with Class "C" spray nozzles with rubber bumpers. These hose stations permit coverage of the area above the suspended ceiling.

TABLE 9.5A-1 (Sheet 60)

APCSB 9.5-1 Appendix A	WCGS
Fire detection in the control room cabinets and consoles should be provided by smoke and heat detectors in each fire area. Alarm and annunciation should be provided in the control room. Fire alarms in other parts of the plant should also be alarmed and annunciated in the control room.	General area products of combustion detectors are provided in the ceiling of the control room and at the ceiling in the area behind the control room proper. Photoelectric duct detectors are provided in the cabinet area return air duct. In addition, cabinets which contain redundant safe shutdown circuits have detectors installed inside the cabinets. All fire alarms in the plant are alarmed and annunciated in the control room.
Breathing apparatus for control room operators should be readily available. Control room floors, ceilings, supporting structures and walls, including penetrations and doors, should be designed to a minimum fire rating of 3 hours. All penetration seals should be airtight. The control room ventilation intake should be provided with smoke detection capability to automatically alarm locally and isolate the control room ventilation system to protect operators by preventing smoke from entering the control room. Manually operated venting of the control room should be available so that operators have the	Breathing apparatus are available for control room operators. The control room is separated from adjacent areas by 3-hour-rated walls. The floor and ceiling, including structural steel, are also rated for 3 hours. All penetration seals are relatively airtight. The control building ventilation system is equipped with a smoke detector in the outside air intake. The control of the system for isolation or venting is manual.

option of venting for visibility. Manually operated ventilation systems are acceptable.	
Cables should not be located in concealed floor and ceiling spaces. All cables that enter the control room should terminate in the control room. That is, no cabling should be simply routed through the control room from one area to another. If such concealed spaces are used, however, they should have fixed automatic total flooding Halon protection.	Cable trenches in the floor of the control room are provided with fixed automatic total flooding Halon systems.
3. <u>Cable Spreading Room</u>	
a) The preferred acceptable methods are:	
(1) Automatic water system such as closed head sprinklers, open head deluge, or open directional spray nozzles. Deluge and open spray systems should have provisions for manual operation at a remote station; however, there should also be provisions to	The cable spreading rooms are protected by an automatic preaction sprinkler system installed in the ceiling of each room. Location of the sprinkler heads considers cable tray sizing and arrangement. Cables are designed to allow wetting down with deluge water without electrical faulting. The sprinkler system is equipped with closed heads.

TABLE 9.5A-1 (Sheet 62)

APCSB 9.5-1 Appendix A		WCGS
	preclude inadvertent operation. Location of sprinkler heads or spray nozzles should consider cable tray sizing and arrangements to assure adequate water coverage. Cables should be designed to allow wetting down with deluge water without electrical faulting. Open head deluge and open directional spray systems should be zoned so that a single failure will not deprive the entire area of automatic fire suppression capability. The use of foam is a type capable of being delivered by a sprinkler or deluge system, such as an Aqueous Film Forming Foam (AFFF).	
(2)	Manual hoses and portable extinguishers should be provided as backup.	Manual hose stations and portable extinguishers are located in the area for backup protection.

TABLE 9.5A-1 (Sheet 63)

APCSB 9.5-1 Appendix A	WCGS
(3) Each cable spreading room of each unit should have divisional cable separation, and be separated from the other and the rest of the plant by a minimum 3-hour rated fire wall (Refer to NFPA 251 or ASTM E-119 for fire test resistance rating).	The two cable spreading rooms are separated vertically by the control room. A 3-hour fire barrier separates the CSR from adjacent areas. The floor and ceiling of room 3501 is 3-hour rated. The floor of room 3801 is 3-hour rated however, the ceiling is formed by the roof of the Control Building. The roof is not a fire barrier. It is however constructed of non-combustible concrete with built up Class A roofing. In addition, the structural steel supporting the roof is protected with 3 hour rated fire proofing. Therefore, building structural integrity is maintained.
(4) At least two remote and separate entrances are provided to the room for access by fire brigade personnel; and	Two remote and separate entrances are provided to the room.
(5) Aisle separation provided between tray stacks should be at least 3 feet wide and 8 feet high.	Generally, aisle separation between tray stacks is 3 feet wide by 7 feet high.
b) For cable spreading rooms that do not provide divisional cable separation of (a)(3),...	Not Applicable.

TABLE 9.5A-1 (Sheet 64)

APCSB 9.5-1 Appendix A	WCGS
c) As an alternate to (a)(1) above, automatically initiated gas systems (Halon or CO2) may be used for primary fire suppression, provided a fixed water system is used as a backup.	Not Applicable.
d) Plants that cannot meet the guidelines of Regulatory Guide 1.75,...	Not Applicable.
4. Plant Computer Room	
Safety-related computers should be separated from other areas of the plant by barriers having a minimum 3-hour fire resistant rating. Automatic fire detection should be provided to alarm and annunciate in the control room and alarm locally. Manual hose stations and portable water and Halon fire extinguishers should be provided.	Not Applicable.
5. Switchgear Rooms	
Switchgear rooms should be separated from the remainder of the plant by minimum 3-hour rated fire barriers to the extent practicable. Automatic fire detection should alarm and annunciate in the	Control building switchgear rooms are separated from the remainder of the plant and from each other by a 3-hour barrier. Automatic Halon 1301 extinguishing systems are provided in each switchgear room. The detection system alarms and annunciates in the

TABLE 9.5A-1 (Sheet 65)

APCSB 9.5-1 Appendix A	WCGS
control room and alarm locally. Fire hose stations and portable extinguishers should be readily available.	control room and locally. Hose stations and portable extinguishers are available in the area.
Cables entering the switchgear room(s) that do not terminate there should be kept at a minimum.	Cables which enter the switchgear room(s) without terminating there are minimized.
Acceptable protection for cables that pass through the switchgear room is automatic water or gas agent suppression. Such automatic suppression must consider preventing unacceptable damage to electrical equipment and possible necessary containment of agent following discharge.	
6. <u>Remote Safety-Related Panels</u>	
The general area housing remote safety-related panels should be provided with automatic fire detectors that alarm locally and alarm and annunciate in the control room. Combustible materials should be controlled and limited to those required for operation. Portable extinguishers and manual hose stations should be provided.	The areas housing the remote safety-related panels are protected by a detection system which alarms and annunciates locally and in the control room. Combustible materials are controlled and limited to those required for operation. Portable extinguishers and manual hose stations are provided.
7. <u>Station Battery Rooms</u>	
Battery rooms should be protected against fire explosions. Battery rooms should	Battery rooms are separated from each other and from the rest of the plant by 3-hour fire barrier walls, floors, and

TABLE 9.5A-1 (Sheet 66)

APCSB 9.5-1 Appendix A	WCGS
be separated from each other and other areas of the plant by barriers having a minimum fire rating of 3-hours inclusive of all penetrations and openings. (See NFPA 69, "Standard on Explosion Prevention Systems.") Ventilation systems in the battery rooms should be capable of maintaining the hydrogen concentration well below 2 vol. % hydrogen concentration. Standpipe and hose portable extinguishers should be provided.	ceilings. Ventilation systems in the battery rooms are capable of maintaining the hydrogen concentration well below two-volume percent. Portable extinguishers and hose stations are provided. Portable extinguishers and hose stations are provided in the corridor outside of the rooms.
Alternatives:	
a) Provide a total fire rated barrier enclosure of the battery room complex that exceeds the fire load contained in the room. b) Reduce the fire load to be within the fire barrier capability of 1-1/2 hours. OR c) Provide a remote manual actuated sprinkler system in each room and	The battery rooms are served by two systems--the control building supply air system and the Class IE unit. Loss of either or both of these systems will be alarmed in the control room via the plant computer. Each battery room is also provided with a hydrogen detector which will alarm the control room whenever the hydrogen concentration exceeds 1 volume percent in any one of the battery rooms. The control building supply air system supplies outside air to each of the four dc switchgear rooms. This air is exhausted from the switchgear rooms by means of the control building

APCSB 9.5-1 Appendix A	WCGS
provide the 1-1/2 hour fire barrier separation.	exhaust system. The supply air system provide approximately 1 air change per hour in each battery room. Battery rooms 1, 3, 2 and 4 are each served by the Class IE ac system. Each battery room is supplied and exhausted separately. The Class IE ac systems each operate in a complete recirculating mode at all times. Since these systems also serve their respective ESF switchgear and dc switchgear rooms, it has been conservatively calculated that with no fresh air the system can operate for approximately 3 days before the hydrogen concentration reaches 3 volume percent. All ductwork penetrations of the battery rooms are provided with 3-hour fire dampers.
8. <u>Turbine Lubrication and Control Oil Storage and Use Areas</u>	
A blank fire wall having a minimum resistance rating of three hours should separate all areas containing safety-related systems and equipment from the turbine oil system. When a blank wall is not present, open head deluge protection should be provided for the turbine oil hazards and automatic open head	The turbine oil system is located in the turbine building which is separated by a 3-hour barrier from buildings housing safe shutdown equipment. Automatic wet sprinklers are provided in the turbine oil reservoir room and turbine oil storage tank room.

TABLE 9.5A-1 (Sheet 68)

APCSB 9.5-1 Appendix A	WCGS
water curtain protection should be provided for wall openings.	
9. <u>Diesel Generator Areas</u>	
Diesel generators should be separated from each other and other areas of the plant by fire barriers having a minimum fire resistance rating of three hours.	The diesel generators are separated from each other and other areas of the plant by fire barriers having a minimum fire resistance of 3 hours. The ceiling is an 18-inch thick concrete slab which is supported by structural steel which has been fireproofed for 3 hours. No safety-related equipment is located above the building's ceiling.
Automatic fire suppression such as AFFF foam or sprinklers should be installed to combat any diesel generator or lubricating oil fires. Automatic fire detection should be provided to alarm and annunciate in the control room and alarm locally. Drainage for fire fighting water and means for local manual venting of smoke should be provided.	Automatic preaction sprinkler system is provided in each room. Fire detectors are installed in the ceiling of the room. The detectors alarm locally and in the control room. Drainage is provided for firefighting water, and smoke and heat venting is provided utilizing the normal ventilation exhaust air flow path.
When day tanks cannot be separated from the diesel generator, one of the following should be provided for the diesel generator area:	Each diesel fuel oil day tank is provided with protection features to preclude the uncontrolled leakage of diesel fuel. The design features provided for the day tank were reviewed and accepted by the NRC at the Wolf Creek Fire Protection Audit of February 6 to 9, 1984.

a) Automatic open head deluge head spray nozzle system(s) b) Automatic closed head sprinklers c) Automatic AFFF that is delivered by a sprinkler deluge or spray system d) Automatic gas system (Halon or CO2) may be used in lieu of foam or sprinklers to combat diesel generator and/or lubricating oil fires.	
10. <u>Diesel Fuel Oil Storage Areas</u>	
Diesel fuel oil tanks with a capacity greater than 1100 gallons should not be located inside the buildings containing safety-related equipment. They should be located at least 50 feet from any building containing safety-related equipment or, if located within 50 feet, they should be housed in a separate building with construction having a minimum fire resistance rating of 3 hours. Buried tanks	The diesel oil storage tanks are buried approximately 23 feet from the diesel generator building wall.

APCSB 9.5-1 Appendix A	WCGS
are considered as meeting the 3-hour fire resistance requirements. See NFPA 30, "Flammable and Combustible Liquids Code", for additional guidance.	
When located in a separate building, the tank should be protected by an automatic fire suppression system such as AFFF or sprinklers.	
Tanks, unless buried, should not be located directly above or below safety-related systems or equipment regardless of the fire rating of separating floors or ceilings.	
11. <u>Safety-Related Pumps</u>	
Pump houses and rooms housing safety-related pumps should be protected by automatic sprinkler protection unless a fire hazards analysis can demonstrate that a fire does not endanger other safety-related equipment <u>required for safe plant shutdown</u>. Early warning fire detection should be installed with alarm and annunciation locally and in the control room.	The fire hazards analysis, Appendix 9.5B, indicates that a fixed suppression system is not required in the safety-related pump rooms and houses. Early warning fire detection is installed with alarm and annunciation locally and in the control room. Local hose station and portable extinguishers are provided.

TABLE 9.5A-1 (Sheet 71)

APCSB 9.5-1 Appendix A	WCGS
Local hose stations and portable extinguishers should also be provided.	
12. New Fuel Area	
Hand portable extinguishers should be located within this area. Also, local hose stations should be located outside but within hose reach of this area. Automatic fire detection should alarm and annunciate in the control room and alarm locally. Combustibles should be limited to a minimum in the new fuel area. The storage area should be provided with a drainage system to preclude accumulation of water.	Hand portable extinguishers and hose stations are located throughout the fuel building. An automatic fire detection system is installed which alarms and annunciates in the control room and locally. Combustibles are limited to a minimum. The storage area is provided with a drainage system to preclude accumulation of water.
The storage configuration of new fuels should always be so maintained as to preclude criticality for any water density that might occur during water application.	New fuel storage is designed for optimum moderation conditions. Refer to Section 9.1.
13. Fuel Storage Pool Area	
Protection for the fuel storage pool area should be provided by local hose stations and portable extinguishers. Automatic	Local hose stations and portable extinguishers are provided in this area. Automatic fire detection is provided to alarm and annunciate in the control room and locally.

TABLE 9.5A-1 (Sheet 72)

APCSB 9.5-1 Appendix A	WCGS
fire detection should be provided to alarm and annunciate in the control room and to alarm locally.	
14. Radwaste Building	
The radwaste building should be separate from other areas of the plant by fire barriers having at least 3-hour ratings Automatic sprinklers should be used in all areas where combustible materials are located. Automatic fire protection should be provided to annunciate and alarm in the control room and alarm locally. During a fire, the ventilation. systems in these areas should be capable of being isolated. Water should drain to liquid radwaste building sumps.	With the exception of the Radwaste Tunnel, the Radwaste Building is Physically separated from the rest of the power block by at least 20 feet. The Radwaste Tunnel (Fire Area RW-1) is separated from the connected Auxiliary Building by a 3-hour rated fire barrier (wall). Power block buildings with safe shutdown or safety-related components have 3-hour rated fire barriers (walls) on the side nearest the Radwaste Building. An automatic sprinkler system is provided over the dry waste compactor. Automatic detection is provided to annunciate and alarm in the control room and locally. The ventilation systems in this building are capable of being isolated. Firefighting water drains to liquid radwaste building sumps. Portable extinguishers and hose stations are provided throughout the building
Acceptable alternative fire protection is automatic fire detection to alarm and annunciate in the control room, in addition to manual hose stations and portable extinguishers consisting of hand held and large wheeled units.	

TABLE 9.5A-1 (Sheet 73)

APCSB 9.5-1 Appendix A	WCGS
15. Decontamination Areas	
The decontamination areas should be protected by automatic sprinklers if flammable liquids are stored. Automatic fire detection should be provided to annunciate and alarm in the control room and alarm locally. The ventilation system should be capable of being isolated. Local hose stations and hand portable extinguishers should be provided as backup to the sprinkler system.	Decontamination areas (hot machine shop and access control area) which contain flammable liquids are protected by detectors which alarm locally and in the control room. Portable extinguishers and hose stations are also provided in these areas. The ventilation systems in these areas are capable of being isolated. The access control area of the control building is provided with an automatic wet-pipe sprinkler system. The combustible loading in the hot machine shop is low. The hot machine shop is not a safety-related area, and is separated from adjacent safety-related areas by a 3-hour fire barrier. Therefore, an automatic sprinkler system is not installed.
16. Safety-Related Water Tanks	
Storage tanks that supply water for safe shutdown should be protected from the effects of fire. Local hose stations and portable extinguishers should be located in nearby hose houses. Combustible materials should not be stored next to outdoor tanks. A minimum of 50 feet of separation should be provided between outdoor tanks and combustible materials where feasible.	Safety-related water tanks are located in areas which contain low quantities of combustibles. Hydrants and hose houses equipped with 250 feet of hose are provided within 250 feet of all outdoor safety-related water tanks.

TABLE 9.5A-1 (Sheet 74)

APCSB 9.5-1 Appendix A	WCGS
17. Cooling Towers	Not applicable.
18. Miscellaneous Areas	
Miscellaneous areas such as records storage areas, shops, warehouses, and auxiliary boiler rooms should be so located that a fire or effects of a fire, including smoke, will not adversely affect any safety-related systems or equipment. Fuel oil tanks for auxiliary boilers should be buried or provided with dikes to contain the entire tank contents.	Miscellaneous structures are located such that a postulated fire within these structures or the effects of a fire, including smoke, does not pose a hazard to safety-related structures and systems required for safe shutdown. The heating oil storage tank is provided with a berm to contain the entire fuel oil tank contents.
G. Special Protection Guidelines	
1. Welding and Cutting, Acetylene-Oxygen Fuel Gas Systems	
This equipment is used in various areas throughout the plant. Storage locations should be chosen to permit fire protection by automatic sprinkler systems. Local hose stations and portable equipment should be provided as backup. The requirements of NFPA 51 and 51B are applicable to these hazards. A permit system should be required to utilize this equipment. (Also refer to 2f herein.)	Welding and cutting and acetylene-oxygen fuel gas systems are controlled by a permit system. Bottled gases are stored only in areas protected by automatic sprinklers or in isolated structures. An exception is the flammable gas cylinder storage in Room 3102, which is necessary for analysis activities in the Hot Laboratory. Hand hose lines and portable extinguishers are located at all storage areas.

TABLE 9.5A-1 (Sheet 75)

APCSB 9.5-1 Appendix A	WCGS
2. <u>Storage Areas for Dry Ion Exchange Resins</u>	
Dry ion exchange resins should not be stored near essential safety-related systems. Dry unused resins should be protected by automatic wet pipe sprinkler installations. Detection by smoke and heat detectors should alarm and annunciate in the control room and alarm locally. Local hose stations and portable extinguishers should provide backup for these areas. Storage areas of dry resin should have curbs and drains. (Refer to NFPA 92M, "Waterproofing and Draining of Floors.")	Dry ion exchange resins are not stored near essential safety-related systems. New resins are received normally in a hydrated form and do not constitute a fire hazard. Only the containers in which the resins are stored are combustible. The spent resins are sluiced to the spent resin storage tank located in the radwaste building, which is not a safety-related building. Administrative controls ensure that resin in quantities required for immediate use only are introduced into safety-related areas, and the containers are hauled away as soon as they are emptied. In addition, detection, portable extinguishers, and hose stations are provided in these areas. Storage areas are provided with drains.
3. <u>Hazardous Chemicals</u>	
Hazardous chemicals should be stored and protected in accordance with the reactor commendations of NFPA 49, "Hazardous Chemicals Data." Chemical storage areas should be well ventilated and protected against flooding conditions since some chemicals may react with water to produce ignition.	Hazardous chemicals are stored and protected in accordance with the recommendations of NFPA 49-1975. Storage areas are ventilated and drained.

TABLE 9.5A-1 (Sheet 76)

APCSB 9.5-1 Appendix A	WCGS
4. <u>Materials Containing Radioactivity</u>	
Materials that collect and contain radioactivity such as spent ion exchange resins, charcoal filters, and HEPA filters should be stored in closed metal tanks or containers that are located in areas free from ignition sources or combustibles. These materials should be protected from exposure to fires in adjacent areas as well. Consideration should be given to requirements for removal of isotopic decay heat from entrained radioactive materials.	Materials that collect and contain radioactivity are stored in closed metal tanks or containers located in areas free from ignition sources.

APPENDIX 9.5B
FIRE HAZARDS ANALYSES

The USAR FHA has been superseded by the following documents:

- E-1F9905, Fire Hazard Analysis.
- E-1F9900, Post-Fire Safe Shutdown Manual Actions.
- E-1F9910, Post-Fire Safe Shutdown Fire Area Analysis.
- E-1F9915, Design Basis Document for OFN RP-017, Control Room Evacuation.
- XX-E-013, Post-Fire Safe Shutdown (PFSSD) Analysis.
- M-663-00017A, Fire Protection Evaluations for Unique or Unbounded Fire Barrier Configurations.

The above documents are incorporated by Reference within the USAR.

APPENDIX 9.5C

RESPONSES TO QUESTIONS CONTAINED IN THE NRC'S LETTERS DATED NOVEMBER 3, 1977 FROM OLAN D. PARR TO THE SNUPPS UTILITY APPLICANTS

(Note that all section and page numbers referenced by the NRC in the questions contained in this Appendix are those contained in the original Fire Protection Report, dated April 1, 1977)

Item 1. (General)

(RSP) Throughout the fire hazards analysis, you state that the fire ratings of barriers protecting various safety related equipment, such as the control room, auxiliary building, battery room, and cable spreading room, are below that specified in Appendix A to BTP 9.5-1. It is our position that all walls, ceilings, floors, and associated penetrations which enclose separate safety related fire areas shall have a minimum fire rating of three hours. State your intent with regard to this staff position. (See related items 23, 24, 26, 27, 28, 29 and 31.)

Response:

See Section 9.5.1.2.2.3, Figure 9.5.1-2 and Appendix 9.5B.

Item 2. Section 9.5.1.2.2, Page 9.5-3, and Table 9.5-5, Sheet 4)

Describe the design basis and criteria for the automatic sprinkler systems used in vertical cable chases in the auxiliary building and control building. Provide assurance that the associated drain systems are adequately designed. Describe how manual fire fighting and smoke removal can be accomplished.

Response:

Refer to Section 9.5.1.2.2.1, paragraph entitled "Automatic Wet Pipe Sprinkler Systems" and the appropriate fire areas in the Fire Hazards Analysis, Appendix 9.5B.

Item 3. (Section 9.5.1.2.2, Page 9.5-5)

Substantiate the fire resistance capacity of the following items by verifying that their construction is in accordance with a particular design that has been fire tested:

(a) rated fire barriers,

(b) fire barrier penetration seals,

(c) fire stops in cable trays,

(d) fire dampers/fire doors, as well as how they are installed in the ventilation ducts that penetrate fire rated barriers of safety related areas, and

(e) metal deck roof.

Also identify the design and the test method used and the acceptance criteria.

Response:

Refer to Section 9.5.1.2.2.3.

Item 4. (Section 9.5.1.2.2., Page 9.5-5)

Confirm that the fire alarm system meets the requirements for Class A systems, as defined in NFPA 72D, and also meets the requirements for Class 1 circuits as stated in the National Electrical Code Alarms.

Response:

Refer to Section 9.5.1.2.2.2.

Item 5. (Section 9.5.1.3, Page 9.5-7)

Identify safety related areas where a hose station may be blocked by a fire in that particular area. For any such case, indicate the location of alternate accessible hose stations.

Response:

Refer to Section 9.5.1.2.2.1, paragraph entitled "Standpipes and Hose Racks."

Item 6. (Table 9.5-4, Sheet 7)

You state that redundant systems necessary for safe shutdown are separated such that both trains are not subject to the same fire hazard. Identify all the redundant systems necessary for safe shutdown which are separated only by distance. Describe the fire detection system and the primary and backup suppression system provided for these systems necessary for safe shutdown. Provide the results of an analysis to demonstrate that for a postulated fire, including an exposure fire and failure of the primary fire suppression system, that safe shutdown can still be accomplished. For any cases where safe shutdown cannot be assured, describe the additional measures which will be taken.

Response:

Refer to Appendix 9.5B.

Item 7. (Table 9.5-4, Sheet 12)

If approved Class A elevator, pressure, water-tight, and missile-resistant doors are not available for this plant application, describe how the doors to be used will be shown to be the equivalent of Class A doors.

Response:

Refer to Section 9.5.1.2.2.3.d.

Item 8. (Table 9.5-4, Sheet 19)

Describe the manner in which fire and smoke are either isolated or ventilated via the normal and/or emergency ventilation system in all parts of the auxiliary, radwaste, fuel, and control buildings.

Include in your discussions, (a) the equipment used, (b) operator actions required for this operation, (c) the control access to the equipment and (d) the ability of the equipment to handle high temperature gases and particles.

Response:

Refer to Section 9.5.1.2.2.4.

Item 9. (Table 9.5-4, Sheet 24)

(RSP) Your response to Section D.5 of BTP 9.5-1 Appendix A is not acceptable. It is our position that fixed self-contained emergency lighting, consisting of fluorescent or sealed beam units with individual 8-hour minimum battery power supplies, should be provided in areas which must be manned for safe shutdown and for access and egress routes to all fire areas. Safe shutdown areas include those required to be manned if the control room must be evacuated. Also, a portable radio communications system should be provided for use by the fire brigade and other operations personnel involved in safe plant shutdown. State your intent with regard to this staff position.

Response:

Refer to Section 9.5.1.2.2.5, Other Fire Protection Features, paragraphs entitled "Emergency Lighting and Radio Communication."

Item 10. (Table 9.5-4, Sheet 28)

(RSP) Your response to Section E.3.(d) of BTP 9.5-1 Appendix A is not acceptable. It is our position that provisions be made to supply water, at least to standpipes and hose connections, for manual fire fighting in areas within hose reach of equipment required for safe shutdown following an SSE. The standpipe system serving such hose stations should be analyzed for SSE loading and should be provided with supports to assure system pressure integrity. The piping and valves for the portion of hose standpipe system affected by this functional requirement should at least satisfy ANSI Standard B 31.1, "Power Piping." The water supply for this condition should be obtained from a normal seismic Category I water system. State your intent with regard to this staff position.

Response:

Refer to Section 9.5.1.2.2.1.

Item 11. (Table 9.5-4, Sheet 28)

You state that hose stations within the containment will be on 150 foot centers rather than 100 foot centers. Confirm that placement of hose stations within the containment will provide adequate coverage such that the effective hose streams will cover all safety related areas. Consideration should be given to situations where the access to a single hose station may be blocked by a fire; in such cases an alternate hose station should be provided.

Response:

Refer to Section 9.5.1.2.2.1, paragraph entitled "Standpipes and Hose Racks."

Item 12. (Table 9.5-4, Sheet 29)

Describe the design basis and criteria used to determine the Halon requirements for the various rooms containing safety related equipment. Provide data including soak times, concentrations, and mode of detection for all rooms protected by a gaseous system.

Response:

Refer to Section 9.5.1.2.2.1, paragraph entitled "Halon 1301 System."

Item 13. (Table 9.5-4, Sheet 33 and Table 9.5-5, Sheet 39)

Where safety related control rooms and auxiliary shutdown and control cabinets contain cables from both separation groups, describe the consequences of a fire in each cabinet. Consider the resultant damage to wiring and instrumentation in adjoining safety related cabinets due to heat and corrosive vapors. Confirm that smoke detectors are provided in the cabinets and consoles in the control rooms or justify acceptable alternatives. Describe any additional measures necessary to assure safe shutdown.

Response:

Refer to Sections A.28 and C.27 of Appendix 9.5B.

Item 14. (Table 9.5-4, Sheet 38)

Confirm that loss of the ventilation system for the battery rooms will alarm in the control room. Describe the operation of the battery room ventilation system.

Response:

Refer to Appendix 9.5B, Sections C.15 and C.16.

Item 15. (Table 9.5-4, Sheet 39)

In the event of a fire in the turbine building which might cause the turbine building roof to collapse, provide information to assure that safe shutdown can still be accomplished.

Response:

Refer to Appendix 9.5B, Section T.2.

Item 16. (Table 9.5-4, Sheet 42)

Provide justification for the deviation you have taken to the requirement of Appendix A to BTP 9.5-1 that requires automatic sprinklers for areas which contain flammable liquids.

Response:

Refer to Appendix 9.5B, Sections HMS.1, C.5, and C.6.

Item 17. (Table 9.5-4 Sheet 44)

Provide either (a) supporting evidence for your statement that the dry ion exchange resins used in the SNUPPS power block will not burn, or (b) revise your fire protection system to provide automatic fire suppression in any safety related area where ion exchange resins are stored.

Response:

Refer to Section 9.5.1.2.2.5, paragraph entitled "Ion Exchange Resins," and Appendix 9.5B, Section A.8.

Item 18. (Table 9.5-5, Sheet 1)

Where an automatic fire suppression system is installed, the fire hazards analysis should be made to demonstrate that the plant can achieve its safe shutdown during a fire assuming malfunction of the fixed automatic fire suppression system in the area. Revise your fire hazards analysis to reflect changes resulting from this assumption.

Response:

Refer to Appendix 9.5B.

Item 19. (Table 9.5-5, Sheet 2, paragraph b)

For fire protection we consider safe shutdown to be the cold shutdown operational mode. Revise your fire hazards analysis and your discussion of systems required for safe shutdown (PSAR Section 7.4.1), as necessary, to reflect this change.

Response:

Refer to Appendix 9.5B.

Item 20. (Table 9.5-5, Sheet 2, paragraph d)

You state the Class 1E conduit and instrumentation are not included in the fire hazards analysis due to incomplete design. Provide the design basis and criteria for assuring protection of exposed Class 1E conduit or Class 1E instrumentation.

Response:

Refer to Section 8.3.1.4.

Item 21. (Table 9.5-5, Sheet 2, paragraph f)

Provide the basis for assigning a value of 12,250 Btu/pound as the total heat release of electrical cable insulation.

Response:

Refer to Appendix 9.5B.

Item 22. (Table 9.5-5, Sheet 4)

You state that Separation Groups 1 and 4 cable trays in Zone 1128 are horizontally separated by 15 feet and the total combustible loading is low. However, no provisions are indicated for fire protection and detection for this zone. Discuss in your analysis an exposure fire involving both separation groups and the affect on shutdown of an exposure fire assuming failure of any fixed suppression system.

Response:

Refer to Appendix 9.5B, Section A.1.

Item 23. (Table 9.5-5, Sheet 8)

Discuss your rationale for not using a 3-hour fire rated wall to separate the safety related equipment in the event of a fire due to transient combustibles in this area. Also describe your proposed method for manual suppression of fires occurring in the cable trays at the 40 foot ceiling or provide fixed suppression.

Response:

Refer to Appendix 9.5B, Section A.3.

Item 24. (Table 9.5-5, Sheet 11)

Provide either (a) 3-hour fire rate construction for isolating the volume control tank, seal water heat exchangers, and containment isolation valves from the remainder of the plant or (b) justification for not providing 3-hour fire rated construction.

Response:

Refer to Appendix 9.5B, Sections A.8, A.24, and A.25.

Item 25. (Table 9.5-5, Sheets 17 and 20)

Provide either (a) separation of redundant safety related equipment by fire rated barriers or (b) justification for not separating redundant safety related equipment by fire rated barriers.

Redundant safe shutdown cable separation group in room 1406 are separated by 9.5 feet. A similar situation exists in Fire Area A-19. Analyze the affects on plant shutdown due to an exposure fire that can effect both groups.

Response:

Refer to Appendix 9.5B, Sections A.16 and A.19.

Item 26. (Table 9.5-5. Sheet 21)

Zones 1502 and 1503 do not appear to provide a 3-hour fire rated barrier between the component cooling water surge tanks. Therefore, provide for a 3-hour barrier or provide justification for not providing such a barrier for protection against fires due to transient combustibles in the area.

Response:

Refer to Appendix 9.5B, Section A.20.

Item 27. (Table 9.5-5, Sheet 22)

Confirm that the concrete block wall separating the control room HVAC equipment is 3-hour fire rated. Also, describe the fire protection provided for the charcoal filters in these rooms.

Response:

Refer to Appendix 9.5B, Sections A.21, A.22, and C.27.

Item 28. (Table 9.5-5, Sheet 23)

Confirm that safety related equipment in Zones 1411, 1412, 1508 and 1509 are separated by means of 3-hour fire rated barriers. Revise the fire hazards analysis considering the exposure fire effects on redundant divisions and the need for fire rated barriers.

Response:

Refer to Appendix 9.5B, Section A.23.

Item 29. (Table 9.5-5, Sheet 25)

Discuss the consequences of an exposure fire with regard to the redundant ESW motor operated valves in Zone 3101. Also provide justification for the lack of a 3-hour fire rated ceiling.

Response:

Refer to Appendix 9.5B, Section C.1.

Item 30. (Table 9.5-5, Sheet 29)

Describe how manual fire fighting of cable fires can be conducted above the suspended ceiling in the access control area.

Response:

Refer to Appendix 9.5B, Sections C.5 and C.6.

Item 31. (Table 9.5-5, Sheet 34)

Provide justification for 2-hour fire-rated floors and ceilings in Fire Areas C-15 and C-16. Also confirm that hose stations can reach all the various rooms in these areas.

Response:

Refer to Appendix 9.5B, Sections C.15 and C.16.

Item 32. (Table 9.5-5, Sheet 39)

Confirm that safety related cable is not installed in concealed spaces in the control room ceiling. If such cable installation exists, discuss the means for fire detection and suppression.

Response:

Refer to Appendix 9.5B, Section C.27.

Item 33. (Table 9.5.5, Sheet 41)

Your fire hazard analysis does not cover all areas adjacent to the control room. Discuss the fire exposure to the control room from all adjacent rooms, such as Zones 3603, 3606, and 3609.

Response:

Refer to Appendix 9.5B, Section C.27.

Item 34. (Table 9.5-5, Sheet 44)

Discuss the consequences of an exposure fire involving both safety trains in Zones 6104 and 6105 of the fuel building, at elevation 2000 feet.

Response:

Refer to Appendix 9.5B, Sections F.2 and F.3.

Item 35. (Table 9.5-5, Sheet 46)

It is our position that manual fire fighting capability shall be permanently installed in containment. Therefore, either state your intent to comply with this position or provide justification for not installing this capability in containment.

Response:

Refer to Appendix 9.5B, Section RB.

Item 36. (Table 9.5-5, Sheet 46)

Confirm that a system, to collect and contain lubricating oil for each reactor coolant pump, will be provided to assure that oil will not leak or spray from the pump or lubricating system. State the capacity of the collection system relative to the pump lube oil inventory, and provide isometric drawings of the system showing it as it will be installed on the reactor coolant pump. Provide additional arrangement drawings showing the location of the reactor coolant pumps and Class 1E cable trays, including the separation distance and fire suppression equipment. Provide justification for not providing sprinklers to extinguish a potential oil fire.

Response:

Refer to Appendix 9.5B, Section RB.

Item 37. (Table 9.5-5, Sheet 47)

Separation between redundant groups does not take into consideration an exposure fire. Discuss the possibility of an exposure fire involving both safety divisions in the reactor building, elevation 2000 feet, cable tray area.

Response:

Refer to Appendix 9.5B, Section RB.

Item 38. (Table 9.5-5, Sheets 47, 48, and 49)

Provide justification for not installing sprinklers in Fire Areas RB-2 and RB-5. Also, justify the use of manual sprinklers rather than automatic sprinklers in Fire Areas RB-3, RB-4, RB-7 and RB-8.

Response:

Refer to Appendix 9.5B, Section RB.

Item 39. (Table 9.5-5, Sheet 51)

Confirm that the hose stations provided at the ends of the radwaste pipe tunnel and cable chase can effectively reach all areas of the tunnel between the radwaste building and the auxiliary building. Describe the provisions for venting and draining the tunnel.

Response:

Refer to Appendix 9.5B, Section RW.1.

Item 40. (Table 9.5-5, Sheet 56)

(RSP) The emergency fuel oil day tanks are not in a separate enclosure. Appendix A to BTP 9.5-1 permits the day tanks to be installed in the diesel generator area only if they are located in a separate enclosure and protected by an automatic fire suppression system. Therefore, we require that you comply with Appendix A in this regard or provide justification for deviating from Appendix A.

Response:

Refer to Section 9.5.1.2.2.5, paragraph entitled "Combustible Oil."

Item 41. (Table 9.5-5, Sheet 56)

Confirm that hose stations installed for the protection of the diesel generators will reach all portions of the diesel generator building. Also confirm that the ceiling of the diesel generator room has a 3-hour fire rating.

Response:

Refer to Appendix 9.5B, Sections D.1 and D.2.

Item 42. (Table 9.5-4, Sheet 29)

(RSP) You state that the Halon systems will be tested at 6-month intervals, in conformance with NFPA recommendations. We require that testing be performed at 3-month intervals. State your intent with regard to this staff position.

Response:

Testing frequencies are defined in plant procedures.

Item 43. The QA program for fire protection should be under the management control of the QA organization. This control consists of (1) either formulating a fire protection QA program that incorporates suitable requirements and is acceptable to management responsible for fire protection, or verifying that the program incorporates suitable requirements and is acceptable to management responsible for fire protection, and (2) verifying the effectiveness of the QA program for fire protection through review, surveillance, and audit. Revise the response to Mr. Boyd's letter of September 30, 1976 to clarify that the QA program for fire protection is under the management control of QA, or provide an alternative position for the staff's evaluation.

Response:

Refer to a separate quality document entitled "Quality Assurance Programs for Design and Construction."

Item 44. Sheet 5 of Table 9.5-4 of the response to Mr. Boyd's letter of September 30, 1976 states: "Design of the fire protection system by Bechtel has proceeded on the basis of normal checking and reviews within Bechtel Engineering as specified by existing procedures. Future design activities will be carried out on the same basis..." To confirm the acceptability of the WCGS's design control and procurement document control program for fire protection, we need a clearer definition of the related Bechtel activities. This should be provided by either (1) committing that these activities are in accordance with the programs described in the Bechtel QA topical report BQ-TOP-1 or (2) providing a similar level of detail in Table 9.5-4 for the staff's evaluations.

Response:

See response to Question 43.

Item 45. Under the QA program criteria in part C of APCSB 9.5-1 Appendix A, it appears that Criterion 5, Test and Test Control, is not applicable to WCGS' activities. Conversely, it appears that the other criteria are applicable. Under the WCGS column of Table 9.5-4, it is not clear that WCGS will meet these criteria to the extent that the organization is involved in these activities. Provide such clarification or identify those criteria which the WCGS organization will not meet.

Response:

See response to Question 43.

Item 46. D. B. Vassallo's letter of August 29, 1977 on fire protection provides supplemental guidance on quality assurance. Modify your response to Mr. Boyd's letter of September 30, 1976 so that your letter is also responsive to this latest supplemental guidance on quality assurance for fire protection.

Response:

Refer to a separate quality document entitled "Quality Assurance Programs for Design and Construction."

APPENDIX 9.5D

RESPONSES TO QUESTIONS CONTAINED IN THE NRC'S LETTERS DATED OCTOBER 18, 1979 FROM OLAN D. PARR TO THE SNUPPS UTILITY APPLICANTS

(Note that all section and page numbers referenced by the NRC in the Questions contained in this Appendix are those contained in the first revision of the Fire Protection Report, dated May 3, 1978.)

Item 1. (Page R5-1)

In the response to question "Item 5" you state that inside the containment hose stations may be 150 ft. apart and that an extra length of hose must be added to the hose station if required. This arrangement is unacceptable. It is our position, as stated in Section E3d of Appendix E to BTP 9.5-1, that standpipes equipped with a maximum of 75 ft. of 1-1/2 in. woven-jacket, lined fire hose with suitable nozzles be provided for all elevations inside containment. In addition, hose stations should be spaced at no more than 100 ft. intervals. Revise your design accordingly.

Response:

Refer to Section 9.5.1.2.2.1, paragraph entitled "Standpipes and Hose Racks."

Item 2. (Page 9.5A-4)

Your response to Section B of BTP 9.5-1, Appendix A, "Administrative Procedures, Controls and Fire Brigade" is adequate. Confirm that you will follow the staff supplemental guidance contained in "Nuclear Plant Fire Protection Functional Responsibilities, Administrative Controls and Quality Assurance," dated June 14, 1977.

Response:

See Table 9.5A Item B1.

Item 3. (Page 9.5-1)

You state that a single failure in the fire protection system will not impair both the primary and backup fire suppression capabilities. However, Figure 9.5-1 (Sheet 2) fire protection system, shows both the north and south cable penetration areas protected by an automatic sprinkler system fed off the hose station standpipe system for the containment. A loss of this single penetration will leave this area without primary and backup fire suppression systems which is not consistent with your stated design objective. It is our position, as stated in Section A4 of Appendix A to BTP 9.5-1, that a single failure in the fire suppression system should not impair both the primary and backup fire suppression capability. Revise your design to meet our guidelines.

Response:

Refer to Appendix 9.5B, Section RB.4.

Item 4. (Page 9.5-4a, Item C)

It is our position, as stated in Section 4C.c(4) of Appendix A, that fire stops be installed every 20 ft. along horizontal cable routings in areas that are not protected by automatic fire suppression systems (AFSS). Vertical cable routings should have fire stops installed at each floor/ceiling level. Between levels or in vertical cable chases, fire stops should be installed at the mid-height if the vertical run is 20 ft. or more but less than 30 ft. or at 15 ft. intervals in vertical runs of 30 ft. or more unless such vertical cable routings are protected by AFSS directed on the cable trays. Individual fire stop designs should prevent the propagation of a fire for a minimum period of 30 min. when tested for the largest number of cable routings and maximum cable density. Revise your design accordingly.

Response:

Refer to Section 9.5.1.2.2 3.

Item 5. (Page 9.5-5, Fire and Smoke Detection and Alarm System)

You state that the fire and smoke detection system is powered by the non-class IE dc system which is backed by a battery charger supplied from the emergency power supply. This arrangement is unacceptable. It is our position, as stated in Section E.1.(a) of Appendix A, that primary and secondary power supplies should be provided for the fire detection system and for electrically operated control valves for automatic suppression systems by:

(a) Using normal offsite power as the primary supply, with a 4-hour battery supply as secondary supply; and

(b) Having capability for manual connection to the Class 1E emergency power bus within 4 hours of loss of offsite power. Such connection should follow the applicable guidelines in Regulatory Guides 1.6, 1.32 and 1.75.

Revise your design accordingly.

Response:

Refer to Section 9.5.1.2.2.2.

Item 6. (Page 9.5-6a, Safety Evaluation Two)

You state that in most areas of high fire loading, a backup system will be available in case of failure of the primary suppression system in a given area. However, the backup system is a portable extinguisher or a hose station. It is our position, as stated in Section E.3(d) of Appendix A, that portable extinguishers, due to their limited capacity and effectiveness, are not considered as secondary protection. Hose stations should be provided so that all areas of the plant can be properly protected. Revise your design accordingly.

Response:

Refer to Section 9.5.1.2.2.1, paragraph entitled "Standpipes and Hose Racks."

Item 7.

It is our position, as stated in Section F2 of Appendix A, that an automatic fire detection and suppression system be provided to protect the area above the suspended ceiling in the control room and adjacent offices, and the access control area. The system should be actuated by a cross-zoned smoke detection system with alarm and annunciation in the control room. Revise your design accordingly.

Response:

Refer to Appendix 9.5B, Section C.27.

Item 8. (Page 9.5A-23)

Verify that self-contained breathing apparatus will have at least two extra air bottles located on site for each unit. Also it is our position, as stated in Section D4(h) of Appendix A, that you should provide an onsite 6 hr. supply of reserve air so arranged to permit quick and complete replenishment of exhausted supply air bottles as they are returned. State your intent with regard to this position.

Response:

See Table 9.5A-1, Item 4h.

Item 9. (Page 9.5A-27, Item b)

Your response is incomplete. It is our position, as stated in Section E3(b) of Appendix A, that all control and sectionalizing valves in the fire water system should be electrically supervised. The electrical supervision signal should indicate in the control room. Otherwise, a management supervision program should be provided. Such a program should include locking valves open with strict key control, tamper-proof seals, and periodic visual check of all valves. Revise your design accordingly.

Response:

Refer to Section 9.5.1.2.2.2, Fire and Smoke Detection and Alarm System.

Item 10. (Page 9.5A-29)

You state that the Halon system is designed to maintain a 5 percent minimum concentration at the ceiling for 10 minutes. This system design is unacceptable. It is our position, as stated in Section E4 of Appendix A, that the total flooding Halon 1301 concentration be increased to extinguish a deep-seated cable tray fire. Revise your system design and fire hazard analysis accordingly.

Response:

Refer to Section 9.5.1.2.2.1, paragraph entitled "Halon 1301 System."

Item 11. (Page 9.5A-39a)

It is our position, as stated in Section F10 of Appendix A, that the diesel generator day tanks be limited to a maximum of 1100 gal. and that if a diked enclosure is provided, that it have sufficient capacity to hold 110% of the contents of the day tank and drained to a safe location. Also, hose stations should be provided for secondary protection for the diesel generator area in case of failure of the primary system (the pre-action system). Revise your design accordingly.

Response:

Refer to Appendix 9.5B, Section D.1.

Item 12. (Page 9.5A-41)

It is our position, as stated in Section F11 of Appendix A, that both early warning fire detection with alarm and annunciation and hose stations be provided for protection of the essential service water pumphouse in addition to the proposed fire extinguishers. Revise your design accordingly.

Response:

Refer to Item F.11 of Table 9.5A-1.

Item 13. (Page 9.5A-44, Welding and Cutting, Acetylene Oxygen Gas System)

You indicate that portable extinguishers and hose stations are provided for the storage locations of welding and cutting, acetylene oxygen gas systems. This provision is unacceptable. It is our position, as stated in Section D2(b) of Appendix A, that gas cylinder storage locations should not be in areas that contain or expose safety-related equipment or the fire protection systems that serve those safety-related areas. A permit system should be required to use this equipment in safety related areas of the plant. In addition, storage locations should be chosen to permit fire protection by automatic sprinkler systems. Local hose stations and portable equipment should be provided as backup. Revise your design accordingly.

Response:

Refer to Table 9.5A-1, Section D.2 and G.1.

Item 14. (Page 9.5B-2, Section 2.3)

In Section 2.3 of your analysis, you state that separation of the devices for nuclear safety-related controls and instrumentation will be achieved by physical separation or barriers between separation groups from the same protective function in accordance with Regulatory Guide 1.75. This separation distance is unacceptable since Regulatory Guide 1.75 does not consider the consequence of an exposure fire. It is our position, as stated in D1(a) of Appendix A, that separate fire areas for each division of safety-related systems be provided to separate redundant systems from a common (exposure) fire. Particular design attention to the use of separate isolated fire areas for redundant cables should be provided to avoid loss of redundant safety-related cables. Revise your design accordingly.

Response:

Refer to Appendix 9.5B.

Item 15. (Page 9.5B-9, Section A.1.4.2)

(a) You state that an automatic preaction-type sprinkler system is installed over cable trays in Zones 1101, 1120, 1121, and 1122 with a design density for the system of 0.3 gpm/ft2 for the most remote 3000 sq. ft. of top surfaces of all trays. This arrangement is unacceptable. It is our position that sufficient sprinkler heads be added or relocated (throughout the plant) such that the design density flow be at the floor level and not at the top of cable trays. This was noticed throughout your fire hazards analysis. Revise your design accordingly.

(b) Throughout your fire hazards analysis, you identify the location of various safety-related cable trays and conduits that are separated by distance only. Your proposed design is unacceptable. It is our position, as stated in Section D1(2) of Appendix A, that 3 hr. fire rated barriers be provided to separate the redundant conduits and/or cable trays. Revise your design accordingly. This applies in the following areas:

Fire Area A-1 (9.5B-7) Reference Figure 9.5-1a, elevation 1974

1. Zone 1101

2. Between Zones 1130 and 1101

3. Between Zones 1122 and 1101

4. Zone 1128

5. Zone 1206

Table A.1 for Fire Area A-1, Failure Modes and Analysis

Section 1-b.

Section 2-b.

Section 3-b.

Section 4-a.

Section 9-b.

Fire Area A-2 (9.5B-19) Reference Figure 9.5-1a, elevation 1974'

1. Zone 1114

Fire Area A-3 (9.5B-23) Reference Figure 9.5-1a-1c, elevation 1974', 2000', 2026'.

1. Between Zones 1116 and 1117

Fire Area A-6 (9.5B-33) Reference Figure 9.4-1a-1d, elevation 1974', 2000', 2026', 2047'.

1. In Zone 1127, Section A.6.7.2.1

Fire Area A-7 (9.5B-3c) Reference Figure 9.5-1a, elevation 1974'

1. In Zone 1126

Fire Area A-16 (9.5B-67) Reference Figure 9.5-1c, elevation 2026'

1. Zone 1401

2. Zone 1406

Table A.16 for Fire Area A-16

Section 1	Failure Modes & Analysis
3	a, b
4	b

Section 2

1	a, b, c
2	a
3	b
4	b
10	b

Section 3

1	b
2	c, d

Fire Area A-20 (9.5B-90) Reference
Figure 9.5-1D

1. Zone 1502

2. Zone 1403

Fire Area A-23 (9.5B-100) Reference
Figure 9.5-1c-d

1. Zone 1508

2. Zone 1509

3. Zone 1412

4. Zone 1411

Fire Area A-27 (9.5B-112) Reference
Figure 9.5-1c

1. Zone 1403, Section A.27.7.2.2

Fire Area A-28 (9.5B-116) Reference
Figure 9.5-1c

1. Zone 1413, Section A.28.7.1

Fire Area C-1 (9.5-118) Reference Figure 9.5-1a

1. Zone 3101

Response:

(a) Refer to Appendix 9.5B, Section A.1.4

(b) Refer to Appendix 9.5B.

Item 16. (Page 9.5B-115, Fire Area A-28, Reference Figure 9.5-1c, Zone 1413)

You state in your Fire Hazards Analysis how various safety-related cable trays, conduit and equipment are separated by distance from their redundant counterpart, and the criteria that were used to establish barriers between these redundant trains. In order to provide a defense-in-depth design, so that a fire will not prevent the performance of necessary safe plant shutdown functions, a detailed fire hazards analysis should be conducted for each plant area. It is essential that the analysis include the effects of postulated fire involving permanent and/or transient combustibles (exposure fires) on systems, circuit cable trays or equipment required for safe plant cold shutdown. The fire hazards analysis should identify all the redundant mechanical and electric systems and components necessary for safe cold shutdown which are separated only by distance (no fire barriers and with redundant trains 20 ft. or less from each other). Redundant trains within 20 ft. of each other, as a minimum, will be required to be protected by a half hour fire rated barrier as well as area automatic sprinklers. This does not mean that in some instances, such as the cable spreading room, relay room, and 460V and 4160V switchgear rooms, redundant trains separated by more than 20 ft. will not require additional protection.

The fire hazards analyses need to demonstrate that, assuming failure of the primary suppression system, a fire on installed or transient combustibles will not result in the loss of capability to achieve safe cold shutdown. Where this cannot be demonstrated, an alternative means of assuming safe plant shutdown (cold shutdown) should be provided.

Demonstrate that:

(a) Safe shutdown from the main control room where a fire disables any safe shutdown equipment including conduit/cable trays controlled from remote locations.

(b) Safe shutdown from remote locations when the main control room is uninhabitable due to a fire or when fire disables safe shutdown equipment of the relay room or 460V switchgear room or 4160V switchgear room.

Remote location need only be provided for the essential instrumentation, controls and equipment necessary to bring the plant to a hot standby condition. Fire damage to systems necessary to achieve and maintain cold shutdown should be limited so that repairs can be made and cold shutdown achieved within 72 hours.

A detailed breakdown of staff requirements (Attachment 1) is enclosed for:

(a) Minimum safe shutdown systems when one division of all safety systems is not available.

(b) Minimum fire protection when dedicated or alternate shutdown systems are provided.

Provide the requested information.

Response:

Refer to Appendix 9.5B.

Item 17. (Page 9.5B-24, Fire Area A-3, Figure 9.5-1a-1c, Elevations 1974, 2000, 2026)

It appears from the drawings that a fire on the upper elevations of fire area A-3 can propagate through the open grating to the redundant pieces of safety related equipment below, namely the boric acid tank and transfer pump on elevation 1974. This arrangement is unacceptable. It is our position that a 3 hr. fire rated barrier separate these two pieces of safety-related equipment such that a fire will not jeopardize both trains. Revise your design accordingly.

Response:

Refer to Appendix 9.5B, Section A.3.

Item 18. (Pages 9.5B-39, 9.5B-47, 9.5B-49, 9.5B-104, 9.5B-107, 9.5B-109)

Fire Area A-9 (9.5B-47) Reference Figure 9.5-1b-9.5-1c

Zone 1309, Section A.9.4.1

Fire Area A-10 (9.5B-49) Reference Figure 9.5-1b-9.5-1C

Zone 1310, Section A.10.4.1

Fire Area A-24 (9.5B-104) Reference Figure 9.4-1b

Zone 1323, Section A.24.4.1

Fire Area A-25 (9.5B-107) Reference Figure 9.5-1b

Zone 1322, Section A.25.4.1

Fire Area A-26 (9.5B-109) Reference Figure 9.5-1c

Zone 1405, Section A.25.4.1

It is our position, as stated in Section E1(b) of Appendix A, that automatic smoke detectors that alarm locally and in the control room be installed in all areas containing safety-related equipment and/or conduit/cable. Revise your design accordingly.

Response:

Refer to Appendix 9.5E, Section III.F.

Item 19. (Page 9.5B-64)

Fire Area A-15 Reference Figure 9.5-1b

Zone 1331, Section A.15.4.1

Because of the slow response of the rate-compensated fire detector to a small or incipient fire, provide automatic smoke detectors for protection for this area. The detectors should alarm and annunciate in the control room.

Response:

Refer to Appendix 9.5B, Section A.15.

Item 20. (Pages 9.5B-86, 9.5B-90, 9.5B-94, 9.5B-97, 9.5B-100, 9.5B-204, 9.5B-207)

It is our position, as stated in Section d1(j) of Appendix A, that the ceiling of the following fire areas be fire rated for 3 hours for protection of various safety-related equipment as well as conduit/cable trays in the area. Revise your design accordingly.

Fire Area A-8, Reference Figure 9.5-1b

Fire Area A-9, Reference Figure 9.5-1b and 9.5-1c

Fire Area A-22, Reference Figure 9.5-1d

Fire Area A-23, Reference Figure 9.5-1c-d

Fire Area C-33, Reference Figure 9.5-1d

Fire Area C-34, Reference Figure 9.5-1d

Response:

Refer to Appendix 9.5B.

Item 21. (Page 9.5B-118, Fire Area C-1, Reference Figure 9.4-1a, Zone 1301)

You state that fire detection system is not provided in this area, where the ESW isolation valves for both trains are located, and only portable extinguishers are provided for fire-fighting purpose. Your proposal is unacceptable. It is our position, as stated in Section E of Appendix A, that both an automatic smoke detection system as well as an automatic sprinkler system be provided for this area due to the restricted mobility of various areas of this room for manual firefighting. Both systems should alarm and annunciate in the control room. Revise your design accordingly.

Response:

Refer to Appendix 9.5B, Section C.1.

Item 22. (Page 9 5B-126, Fire Area C-4, Reference Figure 9.5-1a, Section C.4.4.4)

You indicate that this area is separated from the horizontal cable (safety-related cable) area above a 2-hour-rated suspended ceiling. Because the fire loading in this area is appreciable, to protect the safety related cable against an exposure fire, the sprinkler system should cover all rooms of fire area C-4. Revise your design accordingly.

Response:

Refer to Appendix 9.5B, Sections C.5 and C.6.

Item 23.

For the following listed areas, you state that failure by fire of all circuits contained in these areas will not prevent safe shutdown of the plant and that the identification of the circuits in these areas, which feed redundant safe shutdown equipment, will be made and the detailed analysis to demonstrate that their failure will not prevent safe shutdown will be provided in the FSAR.

(a) Fire Area C-5 9.5B-129, Reference Figure 9.5-1a, Section C.5.7.2

(b) Fire Area C-7 9.5B-133, Reference Figure 9.5-1a, Section C.7.7.2

(c) Fire Area C-8 9.5B-136, Reference Figure 9.5-1a, Section C.8.7.2

(d) Fire Area C-9 9.5B-139, Reference Figure 9.5-1b, Section C.9.7.2

(e) Fire Area C-10 9.5B-142, Reference Figure 9.5-1b, Section C.10.7.2

(f) Fire Area C-11 9.5B-145, Reference Figure 9.5B-1b, Section C.11.7.2

(g) Fire Area C-12 9.5B-148, Reference Figure 9.5-1b, Section C.12.7.2

(h) Fire Area C-15 9.5B-155, Reference Figure 9.5-1b, Section C.15.7.2

(i) Fire Area C-16 9.5B-158, Reference Figure 9.5-1b, Section C.16.7.2

(j) Fire Area C-17 9.5B-161, Reference Figure 9.5-1b, Section C.17.7.2

(k) Fire Area C-18 9.5B-164, Reference Figure 9.5-1b, Section C.18.7.2

(1) Fire Area C-21 9.5B-173, Reference Figure 9.5-1c, Section C.21.7.2

(m) Fire Area C-22 9.5B-176, Reference Figure 9.5-1c, Section C.22.7.2

(n) Fire Area C-30 9.5B-198, Reference Figure 9.5-1d, Section C.30.7.2

(o) Fire Area C-31 9.5B-200, Reference Figure 9.5.1d, Section C.31.7.2

(p) Fire Area C-33 9.5B-204, Reference Figure 9.5.1d, Section C.33.7.2

Response:

Refer to Appendix 9.5B

Item 24. (Pages 9.5B-179, 9.5B-182)

The following areas are missing a part of the fire hazards analysis which deals with the safe shutdown capability with failure by fire of all circuits and equipment in the fire area.

(a) Fire Area C-23, Reference Figure 9.5-1C, Section C.23.7

(b) Fire Area C-24, Reference Figure 9.5-1C, Section C.24.7

Revise your fire hazard analysis and modify your fire protection program accordingly.

Response:

Refer to Appendix 9.5B.

Item 25. Page 9.5B-190, Fire Area C-27, Reference Figure 9.5.1d, Section C.27.2.3

(a) You indicate that some electrical cables are routed above the suspended ceiling over the main control room. It is our position, as stated in Section F2 of Appendix A, that an automatic fire suppression be provided for protection of the cables running above the suspended ceiling in the control room. The system should be activated by an automatic smoke detection system located above the ceiling. Revise your design accordingly.

(b) Verify that the area above the suspended ceiling is not being used for a supply or exhaust air plenum for the control room. Verify the fire rating in regards to flame spread, fuel contributed and smoke developed when tested under UL E-84 fire test.

(c) Describe how the cables from separation groups 2, 4 and 6 are protected as they pass through the suspended ceiling above the control room.

(d) It is our position, as stated in Section F2 of Appendix A, that automatic smoke detectors, which alarm and annunciate in the control room be provided for all cabinet and consoles that contain redundant safety-related conduit, cable and wiring. Revise your design accordingly.

(e) It is also our position that the peripheral rooms in the control room complex (within the 3 hr. fire rated wall) should have an automatic smoke detector installed as well as each room be separated from the control room by 1 hr. fire rated construction, including all door openings. Revise your design accordingly.

(f) It is also our position, as stated in Section F2 of Appendix A, that the outside air intakes for the control room ventilation system be provided with smoke detection capability to alarm in the control room to enable manual isolation of the control room ventilation system and thus prevent smoke from entering the control room. Revise your design accordingly.

Response:

Refer to Appendix 9.5B, Section C.27.

Item 26. (Page 9 5B-209, Fire Area F-1, Reference Figure 9.5-1b-d, Section F.1.4.1)

It is our position, as stated in Section F12, F13 of Appendix A, that automatic detectors be provided throughout the fuel building and not just at the refueling floor, elevation 2046 ft., 6 in. All detectors should alarm and annunciate in the control room. Revise your design accordingly.

Response:

Refer to Appendix 9.5B, Sections F.1 through F.7.

Item 27. (Page 9.5B-224, Fire Area RB, Reference Figure 9.5-1b, Section RB.4.1)

Specify the type of automatic fire detectors that will be installed above each reactor coolant pump. It is our position, as stated in Section F1 of Appendix A, that an automatic fire detection system be provided throughout the reactor building and not just over the reactor coolant pumps. Detectors should alarm and annunciate in the control room. Revise your design accordingly.

Response:

Refer to Appendix 9.5B, Section RB.4.

Item 28.

Verify that the structural steel of the hot machine shop as well as the fuel handling building are not structurally tied into the fire wall separating these areas from the auxiliary building so that a fire in the non-safety related equipment side will not affect the safety-related equipment and conduit/cable trays on the other side.

Response:

Refer to Appendix 9.5B, Sections HMS-1 and F.1.

Item 29. (Page 9.5B-245 Fire Area D-1, Reference Figures 9.5-1b, Section D.1.4, Fire Area D-2, Page 9.5B-248, Section D.2.4)

It is our position, as stated in Section D1(i) of Appendix A, that the floor drains as well as the trench of each diesel generator room should have provisions for preventing the spread of fire throughout the drain system. Demonstrate that a flammable liquid fire will not spread to the adjacent room; otherwise revise your design accordingly.

Response:

Refer to Appendix 9.5B, Section D.1.

Item 30.

The response to item 43 indicates that the review and audit program of the A/E's QA organization does not extend to fire protection. As indicated in Mr. Vassallo's letter of August 29, 1977 and the "For Comment" editions of Regulatory Guide 1.120, it is our position that the A/E's QA organization should verify the effectiveness of the A/E's QA program for fire protection through review, surveillance, and audits. This is in addition to supervisory controls by the A/E and audits by others. Revise the response to item 43 accordingly.

Response:

See Item C of Table 9.5A-1.

Item 31.

State whether the nonconformance control program and corrective action program for fire protection, described in the A/E's Project Engineering Procedures, meet Sections 17A.1.15 and 17A.1.16 of the WCGS PSAR. If not, list and justify the deviations.

Response:

See Item C7, Table 9.5A-1.

APPENDIX 9.5E

This Section provides a design comparison to 10 CFR 50 Appendix R,Fire Protection Program for Nuclear Power Facilities Operating Priorto January 1, 1979.

TABLE 9.5E-1

WCGS FIRE PROTECTION COMPARISON TO 10CFR50 Appendix R

10CFR50 Appendix R	WCGS
III. Specific Requirements	
A. Water Supplies for Fire Suppression Systems	
Two separate water supplies shall be provided to furnish necessary water volume and pressure to the fire main loop.	Complies.
Each supply shall consist of a storage tank, pump, piping, and appropriate isolation and control valves. Two separate redundant suctions in one or more intake structures from a large body of water (river, lake, etc.) will satisfy the requirement for two separated water storage tanks. These supplies shall be separated so that a failure of one supply will not result in a failure of the other supply.	
Each supply of the fire water distribution system shall be capable of providing for a period of 2 hours the maximum expected water demands as determined by the fire hazards analysis for safety-related areas or other areas that present a fire exposure hazard to safety-related areas.	

TABLE 9.5E-1 (Sheet 2)

10CFR50 Appendix R	WCGS
When storage tanks are used for combined service-water/fire-water uses the minimum volume for fire uses shall be ensured by means of dedicated tanks or by some physical means such as a vertical standpipe for other water service. Administrative controls, including locks for tank outlet valves, are unacceptable as the only means to ensure minimum water volume.	
Other water systems used as one of the two fire-water supplies shall be permanently connected to the fire main system and shall be capable of automatic alignment to the fire main system. Pumps, controls, and power supplies in these systems shall satisfy the requirements for the main fire pumps. The use of other water systems for fire protection shall not be incompatible with their functions required for safe plant shutdown. Failure of the other system shall not degrade the fire main system.	In addition to the standard fire protection applications, the system is also used for fire brigade training and as a backup source of raw water to support plant safe shut down for design basis accidents other than fire.
III. B. Sectional Isolation Valves	
Sectional isolation valves such as post indicator valves or key operated valves shall be installed in the fire main loop	Complies.

TABLE 9.5E-1 (Sheet 3)

10CFR50 Appendix R	WCGS
to permit isolation of portions of the main fire main loop for maintenance or repair without interrupting the entire water supply.	
III. C. Hydrant Isolation Valves	
Valves shall be installed to permit isolation of outside hydrants from the fire main for maintenance or repair without interrupting the water supply to automatic or manual fire suppression systems in any area containing or presenting a fire hazard to safety-related or safe shutdown equipment.	Complies.
III. D. Manual Fire Suppression	
Standpipe and hose systems shall be installed so that at least one effective hose stream will be able to reach any location that contains or presents an exposure fire hazard to structures, systems, or components important to safety.	Complies. Wet standpipes for power block fire hoses are designed in accordance with the requirements for Class II service of NFPA No. 14-1976. Hose racks are located so that no more than 100 feet separates adjacent hose racks.
Access to permit effective functioning of the fire brigade shall be provided to all areas that contain or present an exposure fire hazard to structures, systems, or components important to safety.	Access to permit functioning of the fire brigade is adequately provided and is discussed in Appendix 9.5B.

TABLE 9.5E-1 (Sheet 4)

10CFR50 Appendix R	WCGS
Standpipe and hose stations shall be inside PWR containments and BWR containments that are not inerted. Standpipe and hose stations inside containment may be connected to a high quality water supply of sufficient quantity and pressure other than the fire main loop if plant-specific features prevent extending the fire main supply inside containment. For BWR drywells, standpipe, and hose stations shall be placed outside the dry well with adequate lengths of hose to reach any location inside the dry well with an effective hose stream.	The standpipe system for the containment is supplied from the fire main loop through a safety-grade containment penetration. The containment standpipes are normally dry and may be charged by plant operations and fire brigade personnel via local and control room actions. Each hose rack is provided with 75 feet of 1-1/2-inch hose, except the diesel generator, cable spreading rooms, and north end of Corridor No. 2, room 1408, of the Aux Building, Elevation 2026, which are protected with 100 feet of hose.
III. E. Hydrostatic Hose Tests	
Fire hose shall be hydrostatically tested at a pressure of 150 psi or 50 psi above maximum fire main operating pressure, whichever is greater. Hose stored in outside hose houses shall be tested annually. Interior standpipe hose shall be tested every three years.	Complies. Hose in outside hose houses are tested annually at a pressure of 150 psi or 50 psi above maximum fire main operating pressure, whichever is greater. Interior standpipe hose is tested every 3 years at a pressure of 150 psi or 50 psi above maximum fire main pressure, whichever is greater or the hose is replaced at least every 5 years.
III. F. Automatic Fire Detection	
Automatic fire detection system shall be installed in all areas of the plant that contain or present an exposure fire hazard	Automatic fire and smoke detector systems are provided throughout the plant on the basis of the fire

TABLE 9.5E-1 (Sheet 5)

10CFR50 Appendix R	WCGS
to safe shutdown or safety-related systems or components. These fire detection systems shall be capable of operating with or without offsite power.	hazards analysis and consequences of specific postulated fires. A discussion of detector types and specific locations is provided in Appendix 9.5B on an area-by-area basis. E-1F9905, Attachment A provides a list of those fire areas in safety-related buildings which do not have detectors in every room. These rooms are listed to indicate if safe shutdown circuits exist. As shown on E-1F9905, Attachment A, a majority of the rooms have no safe shutdown circuits. Fire Areas A-9, A-10, A-29, A-30, C-35, C-36, and C-37 have no detection provided. The notes to E-1F9905, Attachment A contain brief descriptions of these areas which form the basis for not providing detection. Refer to E-1F9905 for a detailed description of these areas. As indicated in Section 9.5.1.2, the fire detection system is provided with a backup battery power supply. The

TABLE 9.5E-1 (Sheet 6)

10CFR50 Appendix R	WCGS
	batteries are served by a battery charger that can be manually connected to the plant emergency ac power supply. The ESW pumphouse also complies.
III. G. Fire Protection of Safe Shutdown Capability	
1. Fire protection features shall be provided for structures, systems, and components important to safe shutdown. These features shall be capable of limiting fire danger so that:	E-1F9905, Fire Hazards Analysis, coupled with E-1F9910, Post Fire Safe Shutdown Fire Area Analysis, provide an area-by-area analysis of the powerblock, which demonstrates that no single fire can prevent safe shutdown.
a. One train of systems necessary to achieve and maintain hot shutdown conditions from either the control room or emergency control station(s) is free of fire damage; and b. Systems necessary to achieve and maintain cold shutdown from either the control room or emergency control station(s) can be repaired within 72 hours. 2. Except as provided for in paragraph G.3 of this section,	For a fire outside the control room, fire protection features are provided such that post-fire hot standby can be achieved and maintained from the control room, with limited reliance on operator manual actions outside the control room. Predominantly, redundant safe shutdown components are separated by 3-hour fire rated barriers or the equivalent protection identified by III.G.2. Fire resistive cable for BNHV8812B, EGHV0016, EGHV0054 and EMHV8801A, which has been successfully tested per the requirements of NRC Generic Letter 86-10, Supplement 1, may be used in lieu of the rated fire barrier requirement in III.G.2.a. In some instances, operator manual actions outside the control room are utilized in lieu of III.G.2 protection. Operator manual actions have been evaluated for feasibility and reliability, considering NUREG-1852 guidance. For redundant trains of systems required to achieve and maintain cold shutdown that could potentially be affected by

TABLE 9.5E-1 (Sheet 7)

10CFR50 Appendix R	WCGS
where cables or equipment, including associated non-safety circuits that could prevent operation or cause maloperation due to hot shorts, open circuits, or shorts to ground, or redundant trains of systems necessary to achieve and maintain hot shutdown conditions are located within the same fire area outside of primary containment, one of the following means of ensuring that one of the redundant trains is free of fire damage shall be provided:	a single fire, repairs or local operator actions can be performed within 72 hours. As described in E-1F9905 and Section 7.4, an auxiliary shutdown panel is provided as a dedicated means of achieving and maintaining hot standby in the event that the control room is uninhabitable due to a fire. The ESW pumphouse also complies.
a. Separation of cables and equipment and associated non-safety circuits of redundant trains by a fire barrier having a 3-hour rating. Structural steel forming a part of or supporting such fire barriers shall be protected to provide fire resistance equivalent to that required of the barrier;	In fire area A-8, the volume control tank outlet valves (BGLCV0112B and BGLCV0112C) and circuits are not separated in accordance with Section III.G.2. However, the fire protection features provided in fire area A-8 as well as the low fixed combustible loading provides reasonable assurance that at least one valve will respond to a control room close signal following a fire in the area.
b. Separation of cables and equipment and associated non-safety circuits of redundant trains by a horizontal distance of more than 20 feet with no intervening combustible or	

TABLE 9.5E-1 (Sheet 8)

10CFR50 Appendix R	WCGS
fire hazards. In addition, fire detectors and an automatic fire suppression system shall be installed in the fire area; or	
c. Enclosure of cable and equipment and associated non-safety circuits of one redundant train in a fire barrier having a 1-hour rating. In addition, fire detectors and an automatic fire suppression system shall be installed in the fire area;	
Inside noninerted containments one of the fire protection means specified above or one of the following fire protection means shall be provided:	
d. Separation of cables and equipment and associated non-safety circuits of redundant trains by a horizontal distance of more than 20 feet with no intervening combustibles or fire hazards;	
e. Installation of fire detectors and an automatic fire suppression system in the fire area; or	
f. Separation of cables and equipment and associated nonsafety circuits of redundant trains by a noncombustible radiant energy shield.	

TABLE 9.5E-1 (Sheet 9)

10CFR50 Appendix R	WCGS
3. Alternative or dedicated shutdown capability and its associated circuits,6 independent of cables, systems or components in the area, room, or zone under consideration, shall be provided: a. Where the protection of systems whose function is required for hot shutdown does not satisfy the requirement of paragraph G.2 of this section; or b. Where redundant trains of systems required for hot shutdown located in the same fire area may be subject to damage from fire suppression activities or from the rupture or inadvertent operation of fire suppression systems. In addition, fire detection and a fixed fire suppression system shall be installed in the area, room, or zone under consideration.	

6Alternative shutdown capability is provided by rerouting, relocating or modificating of existing systems; dedicated shutdown capability is provided by installing new structures and systems for the function of post-fire shutdown.

TABLE 9.5E-1 (Sheet 10)

10CFR50 Appendix R	WCGS
III. H. Fire Brigade	
A site fire brigade trained and equipped for fire fighting shall be established to ensure adequate manual fire fighting capability for all areas of the plant containing structures, systems, or components important to safety. The fire brigade shall be at least five members on each shift. The brigade leader and at least two brigade members shall have sufficient training in or knowledge of plant safety-related systems to understand the effects of fire and fire suppressants on safe shutdown capability. The qualification of fire brigade members shall include an annual physical examination to determine their ability to perform strenuous fire fighting activities. The shift supervisor shall not be a member of the fire brigade. The brigade leader shall be competent to assess the potential safety consequences of a fire and advise control room personnel. Such competence by the brigade leader may be evidenced by possession of an operator's license or equivalent knowledge of plant safety-related systems.	Fire brigade compliment, training, medical qualification, and personal protective equipment complies with the stipulated requirements. The fire brigade leader is not expected to don a self-contained breathing apparatus (SCBA) in a fire event, since this could significantly deter from his/her primary responsibility of directing fire brigade actions. The remaining four fire brigade members are required to don a SCBA in a fire event presenting an atmosphere immediately dangerous to life and health (IDLH). Minimum emergency breathing air equipment and capacity is as follows: Fire Brigade: 1. At least ten (10) face piece masks are provided at the Fire brigade locker area. 2. At least four (4) of the face piece masks are within a a complete SCBA unit equipped with a 1-hour air cylinder that is ready for immediate fire brigade use. The SCBAs are located at the fire brigade locker area. 3. At least four (4) additional 1-hour cylinders are provided at the fire brigade locker area such that they are readily accessible for change out. These cylinders may be stand alone or part of a complete SCBA unit. 4. An additional 6-hour reserve air supply is provided for each of the four (4) fire brigade members. This supply may be comprised of filled cylinders and/or a refill mechanism(compressor or cascade) conforming to the power and air quality requirements specified in 10 CFR 50 Appendix R III.H. The reserve air supply is located on site and readily accessible for air change out.

TABLE 9.5E-1 (Sheet 11)

10CFR50 Appendix R	WCGS
The minimum equipment provided for the brigade shall consist of personal protective equipment such as turnout coats, boots, gloves, hard hats, emergency communications equipment, portable lights, portable ventilation equipment, and portable extinguishers. Self-contained breathing apparatus using full-face positive-pressure masks approved by NIOSH (National Institute for Occupational Safety and Health approval formerly given by the U.S. Bureau of Mines) shall be provided for fire brigade, damage control, and control room personnel. At least 10 masks shall be avail-able for fire brigade personnel. Control room personnel may be furnished breathing air by a manifold system piped from a storage reservoir if practical. Service or rated operating life shall be a minimum of one-half hour for the self-contained units. At least a 1-hour supply of breathing air in extra bottles shall be located on the plant site for each unit of self-contained breathing apparatus. In addition, an onsite 6-hour supply of reserve air shall be provided and arranged to permit quick and complete replenishment of exhausted	Control Room: 1. At least six (6) complete SCBA units equipped with a 1-hour air cylinder that is ready for immediate use, are provided in the control room area. 2. At least six (6) additional 1-hour cylinders are provided in the control room area such that they are readily accessible for change out. These cylinders may be stand alone or part of a complete SCBA unit. 3. An additional 6-hour reserve air supply is provided for each of the six (6) control room SCBA units. Damage Control: Emergency breathing air supply complement is satisfied by the equipment provided for fire brigade and control room use.

TABLE 9.5E-1 (Sheet 12)

10CFR50 Appendix R	WCGS
supply air bottles as they are returned. If compressors are used as a source of breathing air, only units approved for breathing air shall be used; compressors shall be operable assuming a loss of offsite power. Special care must be taken to locate the compressor in areas free of dust and contaminants.	
III. I. Fire Brigade Training	
The fire brigade training program shall ensure that the capability to fight potential fires is established and maintained. The program shall consist of an initial classroom instruction program followed by periodic classroom instruction, fire fighting practice, and fire drills.	Complies except a grace period of 31 days is allowed for individuals to make up missed training sessions; a 90-day grace period is provided for quarterly training and drills; a 120-day grace period is provided for 2 year reoccurring training. The grace periods are allowed to accommodate scheduling (see Section 9.5.1.7.5.2.1, 9.5.1.7.5.2.1.3 and 9.5.1.7.5.2.1.5). Unannounced fire brigade drills may also be conducted within a four week window of each other. See Section 9.5.1.7.5.2.6.1.1.
1. Instruction	
a. The initial classroom instruction shall include:	
(1) Indoctrination of the plant fire fighting plan with specific identification of each individual's responsibilities.	
(2) Identification of the type and location of fire hazards and associated types of fires that could occur in the plant.	

TABLE 9.5E-1 (Sheet 13)

10CFR50 Appendix R	WCGS
(3) The toxic and corrosive characteristics of expected products of combustion.	
(4) Identification of the location of fire fighting equipment for each fire area and familiarization with the layout of the plant, including access and egress routes to each area.	
(5) The proper use of available fire fighting equipment and the correct method of fighting each type of fire. The types of fires covered should include fires in energized electric equipment, fires in cables and cable trays, hydrogen fires, fires involving flammable and combustible liquids or hazardous process chemicals, fires resulting from construction or modificatiion (welding), and record file fires.	
(6) The proper use of communication, lighting, ventilation, and emergency breathing equipment.	
(7) The proper method for fighting fires inside buildings and confined spaces.	
(8) The direction and coordination of the fire fighting activities (fire brigade leaders only).	

TABLE 9.5E-1 (Sheet 14)

10CFR50 Appendix R	WCGS
(9) Detailed review of fire fighting strategies and procedures.	
10) Review of the latest plant modifications and corresponding changes in fire fighting plans.	
Note - Items (9) and (10) may be deleted from the training of no more than two of the non-operations personnel who may be assigned to the fire brigade.	
b. The instruction shall be provided by qualified individuals who are knowledgeable, experienced and suitably trained in fighting the types of fires that could occur in the plant and in using the types of equipment available in the nuclear power plant.	
c. Instruction shall be provided to all fire brigade members and fire brigade leaders.	
d. Regular planned meetings shall be held at least every 3 months for all brigade members to review changes in the fire protection program and other subjects as necessary.	
e. Periodic refresher training sessions shall be held to repeat the classroom instruction	

TABLE 9.5E-1 (Sheet 15)

10CFR50 Appendix R	WCGS
program for all brigade members over a two-year period. These sessions may be concurrent with the regular planned meetings.	
2. Practice	
Practice sessions shall be held for each shift fire brigade on the proper method of fighting the various types of fires that could occur in a nuclear power plant. These sessions shall provide brigade members with experience in actual fire extinguishment and use of emergency breathing apparatus under strenuous conditions encountered in fire fighting. These practice sessions shall be provided at least once per year for each fire brigade member.	
3. Drills	
a. Fire brigade drills shall be performed in the plant so that the fire brigade can practice as a team.	
b. Drills shall be performed at regular intervals not to exceed 3 months for each shift fire brigade. Each fire brigade member should participate in each drill, but must participate in at least two drills per year.	

TABLE 9.5E-1 (Sheet 16)

10CFR50 Appendix R	WCGS
A sufficient number of these drills, but not less than one for each shift fire brigade per year, shall be unannounced to determine the fire fighting readiness of the plant fire brigade, brigade leader, and fire protection systems and equipment. Persons planning and authorizing an unannounced drill shall ensure that the responding shift fire brigade members are not aware that a drill is being planned until it is begun. Unannounced drills shall not be scheduled closer than four weeks.	
At least one drill per year shall be performed on a "back shift" for each shift fire brigade.	
c. The drills shall be pre-planned to establish the training objectives of the drill and shall be critiqued to determine how well the training objectives have been met. Unannounced drills shall be planned and critiqued by members of the management staff responsible for plant safety and fire protection. Performance deficiencies of a fire brigade or of individual fire brigade members shall be remedied by scheduling addi-	

TABLE 9.5E-1 (Sheet 17)

10CFR50 Appendix R	WCGS
tional training for the brigade or members. Unsatisfactory drill performance shall be followed by a repeat drill within 30 days.	
d. At 3-year intervals a randomly selected unannounced drill shall be critiqued by qualified individuals independent of the licensee's staff. A copy of the written report from such individuals shall be available for NRC review.	
e. Drills shall as a minimum include the following:	
(1) Assessment of fire alarm effectiveness time, time required to notify and assemble fire brigade, and selection, placement and use of equipment, and fire fighting strategies.	
(2) Assessment of each brigade member's knowledge of his or her role in the fire fighting strategy for the area assumed to contain the fire. Assessment of the brigade member's conformance with established plant fire fighting procedures and use of fire fighting equipment, including self-contained emergency breathing apparatus, communication equipment, and ventilation equipment, to the extent practicable.	

TABLE 9.5E-1 (Sheet 18)

10CFR50 Appendix R	WCGS
(3) The simulated use of fire fighting equipment required to cope with the situation and type of fire selected for the drill. The area and type of fire chosen for the drill should differ from those used in the previous drill so that brigade members are trained in fighting fires in various plant areas. The situation selected should simulate the size and arrangement of a fire that could reasonably occur in the area selected, allowing for fire development due to the time required to respond, to obtain equipment, and organize for the fire, assuming loss of automatic suppression capability.	
(4) Assessment of brigade leader's direction of the fire fighting effort as to throughness, accuracy, and effectiveness.	
4. Records	
Individual records of training provided to each fire brigade member, including drill critiques, shall be maintained for at least 3 years to ensure that each member receives training in all parts of the training program. These reoords of training shall be available for NRC review. Retraining or	

TABLE 9.5E-1 (Sheet 19)

10CFR50 Appendix R	WCGS
broadened training for fire fighting within buildings shall be scheduled for all those brigade members whose performance records show deficiencies.	
III. J. Emergency Lighting	
Emergency lighting units with at least an 8-hour battery power supply shall be provided in all areas needed for operation of safe shutdown equipment and in access and egress routes thereto.	The Power block Complies. As stated in Section 9.5.3.2.3, emergency lighting units with eight-hour batteries are located in all plant areas required for operation of safe shutdown equipment and also those areas necessary for access and egress. The ESW pumphouse also complies.
III. K. Administrative Controls	
Administrative controls shall be established to minimize fire hazards in areas containing structures, systems, and components important to safety. These controls shall establish procedures to: 1. Govern the handling and limitation of the use of ordinary combustible materials, combustible and flammable gases	Administrative procedures define limitations to minimize fire hazards in areas containing SSCs important to safety. Administrative procedures are also provided to promote prompt, appropriate action upon discovery of a fire.

TABLE 9.5E-1 (Sheet 20)

10CFR50 Appendix R	WCGS
and liquids, high efficiency particulate air and charcoal filters, dry ion exchange resins, or other combustible supplies in safety-related areas.	
2. Prohibit the storage of combustibles in safety-related areas or establish designated storage areas with appropriate fire protection.	
3. Govern the handling of and limit transient fire loads such as combustible and flammable liquids, wood and plastic products, or other combustible materials in buildings containing safety-related systems or equipment during all phases of operating, and especially during maintenance, modification, or refueling operations.	
4. Designate the onsite staff member responsible for the in-plant fire protection review of proposed work activities to identify potential transient fire hazards and specify required additional fire protection in the work activity procedure.	
5. Govern the use of ignition sources by use of a flame permit system to control welding, flame cutting, brazing, or	

TABLE 9.5E-1 (Sheet 21)

10CFR50 Appendix R	WCGS
soldering operations. A separate permit shall be issued for each area where work is to be done. If work continues over more than one shift, the permit shall be valid for not more than 24 hours when the plant is operating or for the duration of a particular job during plant shutdown.	
6. Control the removal from the areas of all waste, debris, scrap, oil spills, or other combustibles resulting from the work activity immediately following completion of the activity, or at the end of each work shift, whichever comes first.	
7. Maintain the periodic housekeeping inspections to ensure continued compliance with these administrative controls.	
8. Control the use of specific combustibles in safety-related areas. All wood used in safety-related areas during maintenance, modification, or refueling operations (such as lay-down blocks or scaffolding) shall be treated with a flame retardant. Equipment or supplies (such as new fuel) shipped in untreated combustible packing containers may be unpacked in safety-related areas if required	

TABLE 9.5E-1 (Sheet 22)

10CFR50 Appendix R	WCGS
for valid operating reasons. However, all combustible materials shall be removed from the area immediately following the unpacking. Such transient combustible material, unless stored in approved containers, shall not be left unattended during lunch breaks, shift changes, or other similar periods. Loose combustible packing material such as wood or paper excelsior, or polyethylene sheeting shall be placed in metal containers with tight-fitting self-closing metal covers.	
9. Control actions to be taken by an individual discovering a fire. For example, notification of control room, attempt to extinguish fire, and actuation of local fire suppression systems.	
10. Control actions to be taken by the control room operator to determine the need for brigade assistance upon report of a fire or receipt of alarm on control room annunciator panel, for example, announcing location of fire over PA system, sounding fire alarms, and notifying the shift supervisor and the fire brigade leader of the type, size, and location of the fire.	

TABLE 9.5E-1 (Sheet 23)

10CFR50 Appendix R	WCGS
11. Control actions to be taken by the fire brigade after notification by the control room operator of a fire, for example, assembling in a designated location, receiving directions from the fire brigade leader, and discharging specific fire fighting responsibilities including selection and transporation of fire fighting equipment to fire location, selection of protective equipment, operating instructions for use of fire suppression systems, and use of preplanned strategies for fighting fires in specific areas.	
12. Define the strategies for fighting fires in all safety-related areas and areas presenting a hazard to safety-related equipment. These strategies shall designate:	
a. Fire hazards in each area covered by the specific prefire plans.	
b. Fire extinguishants best suited for controlling the fires associated with the fire hazards in that area and the nearest location of these extinguishants.	
c. Most favorable direction from which to attack a fire in each area in view of the ven-	

TABLE 9.5E-1 (Sheet 24)

10CFR50 Appendix R	WCGS
tilation direction, access hallways, stairs, and doors that are most likely to be free of fire, and the best station or elevation for fighting the fire. All access and egress routes that involve locked doors should be specifically identified in the procedure with the appropriate precautions and methods for access specified.	
d. Plant systems that should be managed to reduce the damage potential during a local fire and the location of local and remote controls for such management (e.g., any hydraulic or electrical systems in the zone covered by the specific fire fighting procedure that could increase the hazards in the area because of overpressurization or electrical hazards).	
e. Vital heat-sensitive system components that need to be kept cool while fighting a local fire. Particularly hazardous combustibles that need cooling should be designated.	
f. Organization of fire fighting brigades and the assignment of special duties according to job title so that all fire fighting functions are	

TABLE 9.5E-1 (Sheet 25)

10CFR50 Appendix R	WCGS
covered by any complete shift personnel complement. These duties include command control of the brigade, transporting fire suppression and support equipment to the fire scenes, applying the extinguishant to the fire, communication with the control room, and coordination with outside fire departments.	
g. Potential radiological and toxic hazards in fire zones.	
h. Ventilation system operation that ensures desired plant air distribution when the ventilation flow is modified for fire containment or smoke clearing operations.	
i. Operations requiring control room and shift engineer coordination or authorization.	
j. Instructions for plant operators and general plant personnel during fire.	
III. L. Alternative and Dedicated Shutdown Capability	
1. Alternative or dedicated shutdown capability provided for a specific fire area shall be able to (a) achieve and maintain subcritical reactivity conditions in the reactor, (b) maintain reactor coolant inventory (c) achieve and maintain hot standby[7] conditions	An auxiliary shutdown panel, described in Section 7.4, in conjunction with certain local controls, provides a means of achieving and maintaining hot standby in the event that the main control room is uninhabitable.

TABLE 9.5E-1 (Sheet 26)

10CFR50 Appendix R	WCGS
for PWR (hot shutdown[7] for a BWR); (d) achieve cold shutdown conditions within 72 hours; and (e) maintain cold shutdown conditions thereafter. During the postfire shutdown, the reactor coolant system process variables shall be maintained within those predicted for loss of normal ac power and the fission product boundary integrity shall not be affected i.e., there shall be no fuel clad damage, rupture of any primary coolant boundary, or rupture of the containment boundary.	The auxiliary shutdown panel contains the controls and indication necessary to maintain reactor coolant system inventory, remove decay heat, and provide the required boration for hot standby. Adequate operations shift staffing is provided to achieve and maintain post-fire safe shutdown "Hot Standby Conditions" in the event of a fire. Cold shutdown can be achieved and maintained from outside the control room by additional manual operator action at local control sites.
2. The performance goals for the shutdown functions shall be:	The auxiliary shutdown panel is included in the fire hazards analysis, Appendix 9.5B.
a. The reactivity control function shall be capable of achieving and maintaining cold shutdown reactivity conditions.	The performance criteria of III.L.1 are satisfied, with the exception of maintaining reactor process variables within those predicted for a loss of normal ac power. This is acceptable, as long as a control room fire will not result in the plant reaching an unrecoverable condition, which could lead to core damage. The criteria for "not reaching an unrecoverable condition" are that 1) natural circulation is maintained, and 2) adequate core cooling is maintained.

7 - As defined in the Standard Technical Specifications.

TABLE 9.5E-1 (Sheet 27)

10CFR50 Appendix R	WCGS
b. The reactor coolant makeup function shall be capable of maintaining the reactor coolant level above the top of the core for BWRs and be within the level indication in the pressurizers for PWRs.	In general, the performance goals of III.L.2 are satisfied except that in some cases pressurizer water level is not maintained within level indication. This is acceptable as long as an evaluation demonstrates that unrecoverable conditions are not reached.
c. The reactor heat removal function shall be capable of achieving and maintaining decay heat removal.	
d. The process monitoring function shall be capable of providing direct readings of the process variables necessary to perform and control the above functions.	
e. The supporting functions shall be capable of providing the process cooling, lubrication, etc., necessary to permit the operation of the equipment used for safe shutdown functions.	
3. The shutdown capability for specific fire areas may be unique for each such area or it may be one unique combination	

TABLE 9.5E-1 (Sheet 28)

10CFR50 Appendix R	WCGS
of systems for all such areas. In either case the alternative shutdown capability shall be independent of the specific fire area(s) and shall accommodate postfire conditions where offsite power is available and where offsite power is not available for 72 hours. Procedures shall be in effect to implement this capability.	
4. If the capability to achieve and maintain cold shutdown will not be available because of fire damage, the equipment and systems comprising the means to achieve and maintain the hot standby or hot shutdown condition shall be capable of maintaining such conditions until cold shutdown can be achieved. If such equipment and systems will not be capable of being powered by both onsite and offsite electric power systems because of fire damage an independent onsite power system shall be provided. The number of operating shift personnel, exclusive of fire brigade members, required to operate such equipment and systems shall be on site at all times.	

TABLE 9.5E-1 (Sheet 29)

10CFR50 Appendix R	WCGS
5. Equipment and systems comprising the means to achieve and maintain cold shutdown conditions shall not be damaged by fire or the fire damage to such equipment and systems shall be limited so that the systems can be made operable and cold shutdown can be achieved within 72 hours. Materials for such repairs shall be readily available on site and procedures shall be in effect to implement such repairs. If such equipment and systems used prior to 72 hours after the fire will not be capable of being powered by both onsite and offsite electric power systems because of fire damage an independent onsite power system shall be provided. Equipment and systems used after 72 hours may be powered by offsite power only.	
6. Shutdown systems installed to ensure postfire shutdown capability need not be designed to meet seismic Category I criteria, single failure criteria, or other design basis accident criteria, except where required for other reasons, e.g., because of interface with or impact on existing safety systems, or because of adverse valve actions due to fire damage.	

TABLE 9.5E-1 (Sheet 30)

10CFR50 Appendix R	WCGS
7. The safe shutdown equipment and systems for each fire area shall be known to be isolated from associated non-safety circuits in the fire area so that hot shorts, open circuits, or shorts to ground in the associated circuits will not prevent operation of the safe shutdown equipment. The separator and barriers between trays and conduits containing associated circuits of one safe shutdown division and trays and conduits containing associated circuits or safe shutdown cables from the redundant division, or the isolation of these associated circuits from the safe shutdown equipment, shall be such that a postulated fire involving associated circuits will not prevent safe shutdown8.	

8An acceptable method of complying with this alternative would be to meet Regulatory Guide 1.75 position 4 related to associated circuits and IEEE Std 384-1974 (Section 4.5) where trays from redundant safety divisions are so protected that postulated fires affect trays from only one safety division.

TABLE 9.5E-1 (Sheet 31)

10CFR50 Appendix R	WCGS
III. M. Fire Barrier Cable Penetration Seal Qualification	
Penetration seal designs shall utilize only noncombustible materials and shall be qualified by tests that are comparable to tests used to rate fire barriers. The acceptance criteria for the test shall include:	Complies. As stated in Section 9.5.1.2.2.3, the penetration seal designs were tested utilizing the following for test guidance: o ASTM E 119 o IEEE 634 o ANI/MAERP standard test method
1. The cable fire barrier penetration seal has withstood the fire endurance test without passage of flame or ignition of cables on the unexposed side for a period of time equivalent to the fire resistance rating required of the barrier.	The test included a standard hose stream test.
2. The temperature levels recorded for the unexposed side are analyzed and demonstrate that the maximum temperature is sufficiently below the cable insulation ignition temperature; and	
3. The fire barrier penetration seal remains intact and does not allow projection of water beyond the unexposed surface during the hose stream test.	
III. N. Fire Doors	
Fire doors shall be self-closing or provided with	Complies.

TABLE 9.5E-1 (Sheet 32)

10CFR50 Appendix R	WCGS
closing mechanisms and shall be inspected semiannually to verify that automatic hold-open, release, and closing mechanisms and latches are operable.	Standard fire doors are provided with self-closing devices. Doors are normally closed and locked unless the door is a means of egress, in which case they are closed and latched.
One of the following measures shall be provided to ensure they will protect the opening as required in case of fire:	The door between the Control Room and Pantry is normally open. This door is provided with an electromagnetic closer, which closes the door upon detection of fire.
1. Fire doors shall be kept closed and electrically supervised at a continuously manned location;	
2. Fire doors shall be locked and inspected weekly to verify that the doors are in the closed position;	Special doors such as pressure, water-tight, and missile-resistant that are also fire doors are normally closed and locked.
3. Fire doors shall be provided with automatic hold-open and release mechanisms and inspected daily to verify that doorways are free of obstructions; or	Doors for areas protected by halon systems have self-closing mechanisms or are electrically supervised to ensure they are maintained closed.
4. Fire doors shall be kept closed and inspected daily to verify that they are in the closed position.	
The fire brigade leader shall have ready access to keys for any locked fire doors.	

TABLE 9.5E-1 (Sheet 33)

10CFR50 Appendix R	WCGS
Areas protected by automatic total flooding gas suppression systems shall have electrically supervised self-closing fire doors or shall satisfy option 1 above.	
III. 0. Oil Collection System for Reactor Coolant Pump	
The reactor coolant pump shall be equipped with an oil collection system if the containment is not inerted during normal operation. The oil collection system shall be so designed, engineered, and installed that failure will not lead to fire during normal or design basis accident conditions and that there is reasonable assurance that the system will withtand the Safe Shutdown Earthquake.[9]	The reactor coolant pumps (RCP) are provided with an oil spillage protection and control system that consists of a package of splash guards, catch basins, and enclosure assembled as attachments to the RCP motors at strategic locations to preclude the possibility of oil making contact with hot components and piping.
Such collection systems shall be capable of collecting lube oil from all potential pressurized and unpressurized leakage sites in the reactor coolant pump lube oil systems. Leakage shall be collected and drained to a vented closed container that can hold the entire lube oil system inventory. A flame arrester is required in the vent if the flash point charac teristics of the oil present the hazard of fire flashback. Leakage points to be protected shall include lift pump and piping overflow lines, lube oil cooler, oil fill and drain lines and plugs, flanged connections on oil lines, and lube oil reservoirs where such features exist on the reactor coolant pumps. The drain line shall be large enough to accommodate the largest potential oil leak.	High pressure portions of the lube oil system are totally enclosed with low point drain connections. Low pressure portions of the system are provided with drip pans with low point connections. Remote lube oil fill lines for the upper and lower bearing reservoirs on each reactor coolant pump motor are not protected by drip pans. Due to the design of the fill lines, no lube oil leakage is postulated. The RTD Conduit Boxes (3 per motor) are not provided with drip pans, however, conduit seals and leak tight fittings are used to minimize lube oil leakage. Oil leakage at the RDT Conduit Box does not represent a fire hazard.

TABLE 9.5E-1 (Sheet 34)

10CFR50 Appendix R	WCGS
	The low points of the collection systems are piped to two collection tanks (each tank serves two RCPs) located in the reactor building as shown on Figure 9.5.1-3. Each collection tank has a capacity of greater than 300 gallons. Each RCP motor contains approximately 265 gallons of oil; however, it is unlikely that common failure would occur that would cause the entire inventory of oil in two RCP motors to leak out. The collection tanks are provided with level indication and high level alarm in the control room. Therefore, the plant operators would have an early indication of a significant oil leak and could initiate corrective action.
	Should leakage exceed the collection tank capacity before corrective actions are completed, the tank would overflow onto the containment floor. Any such leakage would flow into the drainage trenches located adjacent to the tanks (see Figure 1.2.11) and be collected in the containment normal sumps. This oil would not come into contact with hot surfaces and would not pose a significant fire hazard.
	The tanks are constructed to the requirements of ASME Section VIII and have flame arrestors on the vents. The drain piping is ANSI B31.1. The tanks and piping are seismically

TABLE 9.5E-1 (Sheet 35)

10CFR50 Appendix R	WCGS
	supported in accordance with the requirements of Paragraph C.2 of Regulatory Guide 1.29.
	The oil collection devices mounted on the RCPs have been seismically analyzed and qualified in accordance with the requirements of Paragraph C.2 of Regulatory Guide 1.29.

[9]See Regulatory Guide 1.29 - "Seismic Design Classification", Paragraph C.2.