CHAPTER 10.0

TABLE OF CONTENTS

STEAM AND POWER CONVERSION SYSTEM

Section		Page
10.1	SUMMARY DESCRIPTION	10.1-1
10.1.1	GENERAL DISCUSSION	10.1-1
10.1.2	PROTECTIVE FEATURES	10.1-2
10.1.2.1	Loss of External Electrical Load and/or Turbine Trip	10.1-2
10.1.2.2	Overpressure Protection	10.1-2
10.1.2.3	Loss of Main Feedwater Flow	10.1-2
10.1.2.4	Turbine Overspeed Protection	10.1-2
10.1.2.5	Turbine Missile Protection	10.1-2
10.1.2.6	Radioactivity	10.1-3
10.2	TURBINE GENERATOR	10.2-1
10.2.1	DESIGN BASES	10.2-1
10.2.1.1	Safety Design Bases	10.2-1
10.2.1.2	Power Generation Design Bases	10.2-1
10.2.2	SYSTEM DESCRIPTION	10.2-1
10.2.2.1	General Description	10.2-1
10.2.2.2	Component Description	10.2-3
10.2.2.3	System Operation	10.2-6
10.2.3	TURBINE INTEGRITY	10.2-10
10.2.3.1	Materials Selection	10.2-10
10.2.3.2	Fracture Toughness	10.2-10
10.2.3.3	High Temperature Properties	10.2-10
10.2.3.4	Turbine Design	10.2-11
10.2.3.5	Preservice Inspection	10.2-11
10.2.3.6	Inservice Inspection	10.2-11
10.2.4	EVALUATION	10.2-12
10.2.5	REFERENCES	10.2-13

TABLE OF CONTENTS (Continued)

Section		Page
10.3	MAIN STEAM SUPPLY SYSTEM	10.3-1
10.3.1	DESIGN BASES	10.3-1
10.3.1.1	Safety Design Bases	10.3-1
10.3.1.2	Power Generation Design Bases	10.3-2
10.3.2	SYSTEM DESCRIPTION	10.3-2
10.3.2.1	General Description	10.3-2
10.3.2.2	Component Description	10.3-3
10.3.2.3	System Operation	10.3-5
10.3.3	SAFETY EVALUATION	10.3-6
10.3.4	INSPECTION AND TESTING REQUIREMENTS	10.3-8
10.3.4.1	Preservice Valve Testing	10.3-8
10.3.4.2	Preservice System Testing	10.3-8
10.3.4.3	Inservice Testing	10.3-8
10.3.5	SECONDARY WATER CHEMISTRY (PWR)	10.3-9
10.3.5.1	Chemistry Control Basis	10.3-9
10.3.5.2	Corrosion Control Effectiveness	10.3-10
10.3.6	STEAM AND FEEDWATER SYSTEM MATERIALS	10.3-11
10.3.6.1	Fracture Toughness	10.3-11
10.3.6.2	Material Selection and Fabrication	10.3-11
10.3.7	REFERENCES	10.3-13
10.4	OTHER FEATURES OF STEAM AND POWER CONVERSION SYSTEM	10.4-1
10.4.1	MAIN CONDENSERS	10.4-1
10.4.1.1	Design Bases	10.4-1
10.4.1.2	System Description	10.4-2
10.4.1.3	Safety Evaluation	10.4-4
10.4.1.4	Tests and Inspections	10.4-4
10.4.1.5	Instrument Applications	10.4-4

TABLE OF CONTENTS (Continued)

Section		Page
10.4.2	MAIN CONDENSER EVACUATION SYSTEM	10.4-5
10.4.2.1	Design Bases	10.4-5
10.4.2.2	System Description	10.4-5
10.4.2.3	Safety Evaluation	10.4-7
10.4.2.4	Tests and Inspections	10.4-7
10.4.2.5	Instrumentation Applications	10.4-7
10.4.3	TURBINE GLAND SEALING SYSTEM	10.4-7
10.4.3.1	Design Bases	10.4-7
10.4.3.2	System Description	10.4-8
10.4.3.3	Safety Evaluation	10.4-9
10.4.3.4	Tests and Inspections	10.4-9
10.4.3.5	Instrumentation Applications	10.4-10
10.4.4	TURBINE BYPASS SYSTEM	10.4-10
10.4.4.1	Design Bases	10.4-10
10.4.4.2	System Description	10.4-10
10.4.4.3	Safety Evaluation	10.4-12
10.4.4.4	Inspection and Testing Requirements	10.4-12
10.4.4.5	Instrumentation Applications	10.4-13
10.4.5	CIRCULATING WATER SYSTEM	10.4-13
10.4.5.1	Design Bases	10.4-13
10.4.5.2	System Description	10.4-14
10.4.5.3	Safety Evaluation	10.4-15
10.4.5.4	Tests and Inspections	10.4-16
10.4.5.5	Instrumentation Applications	10.4-16
10.4.6	CONDENSATE CLEANUP SYSTEM	10.4-16
10.4.6.1	Design Bases	10.4-17
10.4.6.2	System Description	10.4-17
10.4.6.3	Safety Evaluation	10.4-20
10.4.6.4	Tests and Inspections	10.4-21
10.4.6.5	Instrumentation Applications	10.4-21
10.4.7	CONDENSATE AND FEEDWATER SYSTEM	10.4-21
10.4.7.1	Design Bases	10.4-21
10.4.7.2	System Description	10.4-23

TABLE OF CONTENTS (Continued)

Section		Page
10.4.7.3	Safety Evaluation	10.4-30
10.4.7.4	Tests and Inspections	10.4-31
10.4.7.5	Instrumentation Applications	10.4-32
10.4.8	STEAM GENERATOR BLOWDOWN SYSTEM	10.4-34
10.4.8.1	Design Bases	10.4-34
10.4.8.2	System Description	10.4-35
10.4.8.3	Radioactive Releases	10.4-44
10.4.8.4	Safety Evaluation	10.4-44
10.4.8.5	Tests and Inspections	10.4-45
10.4.8.6	Instrumentation Applications	10.4-46
10.4.9	AUXILIARY FEEDWATER SYSTEM	10.4-46
10.4.9.1	Design Bases	10.4-46
10.4.9.2	System Description	10.4-48
10.4.9.3	Safety Evaluation	10.4-51
10.4.9.4	Tests and Inspections	10.4-53
10.4.9.5	Instrumentation Applications	10.4-53
10.4.10	SECONDARY LIQUID WASTE SYSTEM	10.4-53
10.4.10.1	Design Bases	10.4-54
10.4.10.2	System Description	10.4-54
10.4.10.3	Safety Evaluation	10.4-60
10.4.10.4	Tests and Inspections	10.4-60
10.4.10.5	Instrumentation Applications	10.4-60

TABLE OF CONTENTS (Continued)

LIST OF TABLES

Number	Title
10.1-1	Summary of Important Design Features and Performance Characteristics of the Steam and Power Conversion System
10.2-1	Events Following Loss of Turbine Load with Postulated Equipment Failures
10.3-1	Main Steam Supply System Control, Indicating, and Alarm Devices
10.3-2	Main Steam Supply System Design Data
10.3-3	Main Steam System Single Active Failure Analysis
10.3-4	Deleted
10.4-1	Condenser Design Data
10.4-2	Main Condenser Air Removal System Design Data
10.4-3	Circulating Water System Component Description
10.4-4	Condensate Demineralization System Design Data
10.4-5	Condensate and Feedwater System Component Failure Analysis
10.4-6	Condensate and Feedwater System Design Data
10.4-7	Feedwater Isolation Single Failure Analysis
10.4-8	Main Feedwater System Control, Indicating, and Alarm Devices
10.4-9	Steam Generator Blowdown System Major Component Parameters
10.4-10	Steam Generator Blowdown System Single Active Failure Analysis
10.4-11	Steam Generator Blowdown System Control, Indicating, and Alarm Devices

TABLE OF CONTENTS (Continued)

Number	Title
10.4-12	Auxiliary Feedwater System Component Data
10.4-13	Auxiliary Feedwater System Single Active Failure Analysis
10.4-13A	Design Comparisons to Recommendations of Standard Review Plan 10.4.9 Revision 1, "Auxiliary Feedwater System (PWR)" and Branch Technical Position ASB 10-1 Revision 1, "Design Guidelines for Auxiliary Feedwater System Pump Drive and Power Supply Diversity for Pressurized Water Reactor Plant"
10.4-13B	Design Comparisons to NRC Recommendations on Auxiliary Feedwater Systems Contained in the March 10, 1980 NRC Letter
10.4-14	Auxiliary Feedwater System Indicating, Alarm, and Control Devices
10.4-15	Secondary Liquid Waste System - Component Data

CHAPTER 10 - LIST OF FIGURES

*Refer to Section 1.6 and Table 1.6-3. Controlled drawings were removed from the USAR at Revision 17 and are considered incorporated by reference.

Figure#	Sheet	Title	Drawing #*
10.1-1	0	Steam and Power Conversion System	
10.1-2	0	Turbine Cycle Heat Balance 100 Percent of Manufacturer's Guaranteed Rating	
10.1-3	0	Turbine Cycle Heat Balance Valves Wide Open 105 Percent of Manufacturer's Guaranteed Rating	
10.1-4	0	Turbine Cycle Heat Balance-104.5% Thermal Power Uprate and 0°F T_{HOT} Reduction, 1% Steam Generator Blowdown	
10.2-1	1	Main Turbine	M-12AC01
10.2-1	2	Main Turbine	M-12AC02
10.2-1	3	Main Turbine	M-12AC03
10.2-1	4	Main Turbine	M-12AC04
10.2-1	5	Lube Oil Storage, Transfer and Purification System	M-12CF01
10.2-1	6	Lube Oil Storage, Transfer and Purification System	M-12CF02
10.2-1	7	Main Turbine Control Oil System	M-12CH01
10.2-1	8	Main Turbine Control Oil System	M-12CH02
10.3-1	1	Main Steam System	M-12AB01
10.3-1	2	Main Steam System	M-12AB02
10.3-1	3	Main Steam System	M-12AB03
10-3-2	1	Main Steam System	
10.4-1	1	Circulating Water & Waterbox Drains System	M-12DA01
10.4-1	2	Circulating Water System	M-0021
10.4-1	3	Circulating Water Waterbox Venting System	M-12DA02
10.4-1	4	Circulating Water Screenhouse Plans	M-0004
10.4-1	5	Circulating Water Screenhouse – Sections	M-0005
10.4-2	1	Condensate System	M-12AD01
10.4-2	2	Condensate System	M-12AD02
10.4-2	3	Condensate System	M-12AD03
10.4-2	4	Condensate System	M-12AD04
10.4-2	5	Condensate System	M-12AD05
10.4-2	6	Condensate System	M-12AD06
10.4-3	0	Condenser Air Removal	M-12CG01
10.4-4	0	Steam Seal System	M-12CA01
10.4-5	1	Condensate Demineralizer System	M-12AK01
10.4-5	2	Condensate Demineralizer System	M-12AK02
10.4-5	3	Condensate Demineralizer System	M-12AK03
10.4-6	1	Feedwater System	M-12AE01
10.4-6	2	Feedwater System	M-12AE02
10.4-6	3	Feedwater Heater Extraction Drains & Vents	M-12AF01
10.4-6	4	Feedwater Heater Extraction Drains & Vents	M-12AF02
10.4-6	5	Feedwater Heater Extraction Drains & Vents	M-12AF03
10.4-6	6	Feedwater Heater Extraction Drains & Vents	M-12AF04

CHAPTER 10 - LIST OF FIGURES

*Refer to Section 1.6 and Table 1.6-3. Controlled drawings were removed from the USAR at Revision 17 and are considered incorporated by reference.

Figure#	Sheet	Title	Drawing #*
10.4-6	7	Auxiliary Turbines S.G.F.P. Turbine “A”	M-12FC03
10.4-6	8	Auxiliary Turbines S.G.F.P. Turbine "B"	M-12FC04
10.4-7	1	Condensate Chemical Addition System	M-12AQ01
10.4-7	2	Feedwater Chemical Addition System	M-12AQ02
10.4-8	1	Steam Generator Blowdown System	M-12BM01
10.4-8	2	Steam Generator Blowdown System	M-12BM02
10.4-8	3	Steam Generator Blowdown System	M-12BM03
10.4-8	4	Steam Generator Blowdown System	M-12BM04
10.4-8	5	Steam Generator Blowdown System	M-12BM05
10.4-9	0	Auxiliary Feedwater System	M-12AL01
10.4-10	0	Auxiliary Turbines Auxiliary Feedwater Pump Turbine	M-12FC02
10.4-11	0	Deleted	
10.4-12	1	Secondary Liquid Waste System	M-12HF01
10.4-12	2	Secondary Liquid Waste System	M-12HF02
10.4-12	3	Secondary Liquid Waste System	M-12HF03
10.4-12	4	Secondary Liquid Waste System	M-12HF04

CHAPTER 10.0

STEAM AND POWER CONVERSION SYSTEM

10.1 SUMMARY DESCRIPTION

The steam and power conversion system is designed to remove heat energy from the reactor coolant in the four steam generators and convert it to electrical energy. The system includes the main steam system, the turbine-generator, the main condenser, the condensate system, the feedwater system, and other auxiliary systems. The turbine cycle is a closed cycle with water as the working fluid. Two stages of reheat and seven stages of regeneration are included in the cycle. The heat input is provided by reactor coolant in the steam generators. Work is performed by the expansion of the steam in the high and low pressure turbines. Steam is condensed and waste heat is rejected by the main condenser. The condensate and feedwater systems preheat and pressurize the water and return it to the steam generators, thereby closing the cycle.

Figure 10.1-1 is an overall flow diagram of the steam and power conversion system. Table 10.1-1 gives the major design and performance data of the system and its major components. Heat balances at manufacturer's rated power and valves wide open (VWO) power are included as Figures 10.1-2 and 10.1-3, respectively. An estimated heat balance at the power rerate target operating condition (104.5% Thermal Power Up Rate and 0°F T_{HOT} Reduction) is included as Figure 10.1-4.

The safety related design features are discussed in the sections of Chapter 10 which are devoted to the individual systems comprising the steam and power conversion system.

10.1.1 GENERAL DISCUSSION

The main steam system supplies steam to the high pressure turbine and the second stage of steam reheating. The steam is expanded in the high pressure turbine. High pressure turbine extraction steam supplies the first stage of steam reheating and the sixth and seventh stage feedwater heaters. High pressure turbine exhaust steam is fed to the combined moisture separator reheaters (MSRs) and the fifth stage feedwater heaters. Steam is dried and superheated in the MSRs before it is supplied to the low pressure turbines and to the steam generator feedwater pump (SGFP) turbines. Extraction steam from the low pressure turbines supplies the low pressure feedwater heaters. The steam generator blowdown (SGB) flash tank steam is fed to the fifth stage feedwater heaters.

Exhaust steam from the low pressure turbines is condensed and deaerated in the main condenser. Volume change in the secondary side fluid is handled by the surge capacity of the condensate storage tank. Heating of the condensate first occurs in the

reheating hotwells of the main condenser; the heating system is the SGFP turbine exhaust. Condensate is pumped from the condenser hotwells by the main condensate pumps through the condensate demineralizers (when in service) and the low pressure feedwater heaters to the suction of the SGFP. A portion of the condensate is directed to the SGB regenerative heat exchanger to recover additional heat while cooling the blowdown. The heater drain pumps feed the suction of the SGFPs from the heater drain tank. Feedwater is pumped through the high pressure feedwater heaters to the steam generators by means of the SGFPs.

10.1.2 PROTECTIVE FEATURES

10.1.2.1 Loss of External Electrical Load and/or Turbine Trip

Load rejection capabilities of the steam and power conversion systems are discussed in Section 10.3.

10.1.2.2 Overpressure Protection

Overpressure protection for the steam generators is discussed in Section 10.3. The following components are provided with overpressure protection in accordance with the ASME Boiler and Pressure Vessel Code, Section VIII:

a. MSRs

b. Low pressure feedwater heaters

c. High pressure feedwater heaters

d. Heater drain tank

e. SGB flash tank

f. SGB regenerative heat exchanger

10.1.2.3 Loss of Main Feedwater Flow

Loss of main feedwater flow is discussed in Section 10.4.9.

10.1.2.4 Turbine Overspeed Protection

Turbine overspeed protection is discussed in Section 10.2.2.3 and 3.5.1.3.

10.1.2.5 Turbine Missile Protection

Turbine missile protection is discussed in Sections 10.2.3 and 3.5.1.2.

10.1.2.6 Radioactivity

Under normal operating conditions, there are no significant radioactive contaminants present in the steam and power conversion system. It is possible for this system to become contaminated by a steam generator tube leakage. In this event, radiological monitoring of the main condenser air removal system and the steam generator blowdown system, as described in Section 11.5, will detect contamination.

Equilibrium secondary system activities, based on assumed primary-to-secondary side leakages, are developed in Chapter 11.0. The steam generator blowdown system and the condensate demineralizer system serve to limit the radioactivity level in the secondary cycle, as described in Sections 10.4.6 and 10.4.8.

TABLE 10.1-1

SUMMARY OF IMPORTANT DESIGN FEATURES
AND PERFORMANCE CHARACTERISTICS OF THE
STEAM AND POWER CONVERSION SYSTEM

Nuclear Steam Supply System, Full Power Operation

Rated NSSS power, MWt	3,425
Steam generator outlet pressure, psia	1,000
Steam generator inlet feedwater temp, F	444.5
Steam generator outlet steam moisture, %	0.25
Quantity of steam generators per unit	4
Flow rate per steam generator, 10^6 lb/hr	3.785

Nuclear Steam Supply System, Target Power Rerate Operation
(104.5% Thermal Power Up Rate and 0°F T_{HOT} Reduction)

NSSS power, $MW_{(th)}$	3,579
Steam Generator outlet pressure, psia	970
Steam Generator inlet feedwater temp, °F	446
Steam Generator outlet steam moisture, %	0.25
Flow rate per steam generator, 10^6 lb/hr	3.98

Nuclear Steam Supply System, Reduced Thermal Design Flow Operation

NSSS power, $MW_{(th)}$	3,579
Steam Generator outlet pressure, psia	943
Steam Generator inlet feedwater temp, °F	446
Steam Generator outlet steam moisture, %	0.25
Flow rate per steam generator, 10^6 lb/hr	3.98

Turbine Generator

Secondary Power Uprate	
Rating, MWe	1268
Turbine type	Tandem compound six flow, 1 high pressure turbine, 3 low pressure turbines
Operating speed, rpm	1,800
Number of stages	16

Moisture Separator Reheater (MSR)

Stages of reheat	2
Stages of moisture separation	1
Quantity of MSRs per unit	4

TABLE 10.1-1 (Sheet 2)

Main Condenser

Type	Multiple pressure, 3-shell
Quantity, per unit	1
Condensing capacity, Btu/hr	7.87×10^9
Circulating water flow rate	See Section 10.4.5
Circulating water temperature rise	See Section 10.4.5

Condenser Vacuum Pumps

Type	Rotary, motor driven, water sealed
Hogging capacity, each, std. Cfm	72 @ 5 in. Hga
Holding capacity, each, std. Cfm	35 @ 1 in. Hga
Pump speed, rpm	435
Motor hp, each	150
Motor speed, rpm	1,800
Quantity, per unit	3

Condensate Pumps

Type	Vertical, centrifugal motor driven
Design Conditions	
Flow, gpm	7,266
Total head, ft	1,285
Motor hp	3,500
Quantity per unit	3

Feedwater Heaters

Low Pressure	Design	Primary and Secondary Power Uprates
a. No. 1		
Quantity per unit	3	3
Duty, Btu/hr	2.056×10^8	2.42×10^8
b. No. 2		
Quantity per unit	3	3
Duty, Btu/hr	1.262×10^8	1.31×10^8
c. No. 3		
Quantity per unit	3	3
Duty, Btu/hr	2.425×10^8	2.30×10^8
d. No. 4		
Quantity per unit	3	3
Duty, Btu/hr	1.276×10^8	1.22×10^8

TABLE 10.1-1 (Sheet 3)

High Pressure	Design	Primary and Secondary Power Uprates
e. No. 5		
Quantity per unit	2	2
Duty, Btu/hr	2.415×10^8	2.40×10^8
f. No. 6		
Quantity per unit	2	2
Duty, Btu/hr	3.259×10^8	3.38×10^8
g. No. 7		
Quantity per unit	2	2
Duty, Btu/hr	3.354×10^8	3.45×10^8
Steam Generator Feedwater Pumps		
Pump type		Horizontal, centrifugal
Turbine type		Multistage noncondensing
Quantity per unit		2
Design conditions, pump		
Flow, gpm		17,620
Total head, ft		2,387
Turbine hp @ 5,560 rpm		14,328
Motor-Driven Feedwater Pump		
Type		Horizontal, centrifugal Motor driven
Design conditions		
Flow, gpm		480
Total head, ft		1,820
Motor hp		300
Quantity per unit		1
Heater Drain Pumps		
Type		Vertical, centrifugal Motor driven
Design conditions		
Flow, gpm		5,670
Total head, ft		910
Motor hp		1,500
Quantity per unit		2
Steam Generator Blowdown Regenerative Heat Exchanger		
Duty, Btu/hr		26.64×10^6
Quantity per unit		1

TABLE 10.1-1 (Sheet 4)

Steam Generator Blowdown Flash Tank

Steaming rate, lb/hr (max. blowdown)	40,000-52,800
Outlet steam pressure, psia	135-185
Quantity per unit	1

Heater Drain Tank

Quantity per unit	1
Operating pressure, psia	166.6

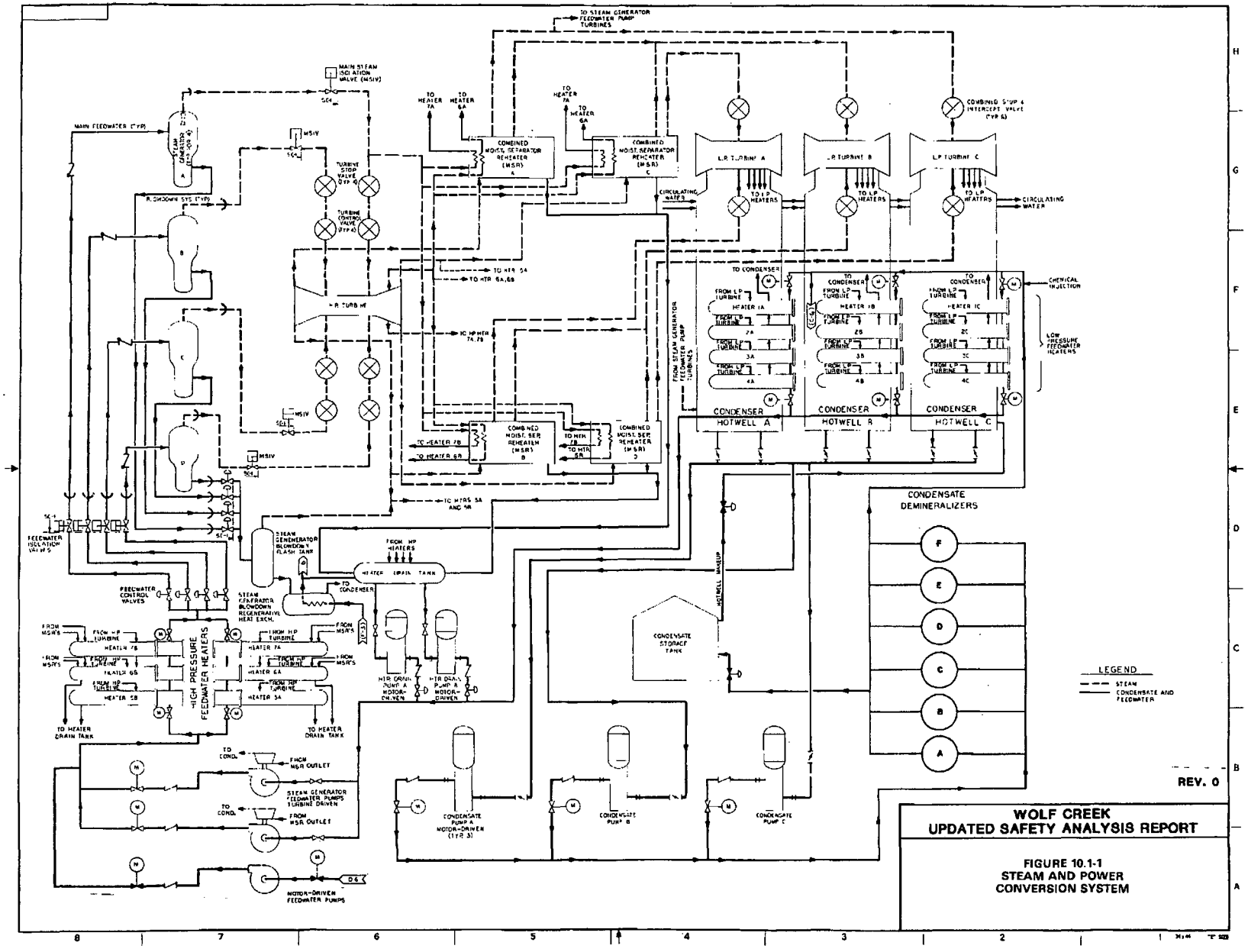
TO STEAM GENERATOR FEEDWATER PUMP TURBINES
MAIN STEAM ISOLATION VALVE (MSIV)
MAIN FEEDWATER (TYP)
STEAM GENERATOR (TYP OF 4)
BLOWDOWN SYS (TYP)
MSIV
TURBINE STOP VALVE (TYP 4)
TURBINE CONTROL VALVE (TYP 4)
HP TURBINE
TO HEATER 7A
TO HEATER 6A
COMBINED MOIST. SEPARATOR REHEATER (MSR) A
COMBINED MOIST. SEPARATOR REHEATER (MSR) C
COMBINED MOIST. SEPARATOR REHEATER (MSR) B
COMBINED MOIST. SEPARATOR REHEATER (MSR) D
TO HTR 5A
TO HTR 6A, 6B
TO HP HTR 7A, 7B
TO HEATER 7B
TO HEATER 6B
TO HTRS 5A AND 5B
TO HTR 7B
TO HTR 5B
CIRCULATING WATER
L.P. TURBINE A
L.P. TURBINE B
L.P. TURBINE C
COMBINED STOP & INTERCEPT VALVE (TYP 6)
TO L.P. HEATERS
TO CONDENSER
FROM L.P. TURBINE
HEATER 1A
HEATER 1B
HEATER 1C
2A
2B
2C
3A
3B
3C
4A
4B
4C
CHEMICAL INJECTION
LOW PRESSURE FEEDWATER HEATERS
CONDENSER HOTWELL A
CONDENSER HOTWELL B
CONDENSER HOTWELL C
FROM STEAM GENERATOR FEEDWATER PUMP TURBINES
FEEDWATER ISOLATION VALVES
STEAM GENERATOR BLOWDOWN FLASH TANK
FEEDWATER CONTROL VALVES
STEAM GENERATOR BLOWDOWN REGENERATIVE HEAT EXCH.
FROM HP HEATERS
HEATER DRAIN TANK
FROM HP TURBINE
FROM MSR'S
HEATER 7B
HEATER 6B
HEATER 5B
HEATER 7A
HEATER 6A
HEATER 5A
HIGH PRESSURE FEEDWATER HEATERS
TO HEATER DRAIN TANK
HTR DRAIN PUMP A MOTOR-DRIVEN
HTR DRAIN PUMP B MOTOR-DRIVEN
HOTWELL MAKEUP
CONDENSATE STORAGE TANK
CONDENSATE DEMINERALIZERS
F
E
D
C
B
A
TO COND.
FROM MSR OUTLET
STEAM GENERATOR FEEDWATER PUMPS TURBINE DRIVEN
CONDENSATE PUMP A MOTOR-DRIVEN (TYP 3)
CONDENSATE PUMP B
CONDENSATE PUMP C
MOTOR-DRIVEN FEEDWATER PUMPS
LEGEND
STEAM
CONDENSATE AND FEEDWATER
REV. 0
WOLF CREEK
UPDATED SAFETY ANALYSIS REPORT
FIGURE 10.1-1
STEAM AND POWER CONVERSION SYSTEM

1LG0521-02 REV. 2

©General Electric Company. This document and information is GE Confidential & Proprietary Information. No part of this document and information may be reproduced, transmitted, stored in a retrieval system nor translated into any human or computer language, in any form or by any means, electronic, mechanical, magnetic, optical, chemical, manual, or otherwise, without the prior written permission of the General Electric Company.

TURBINE AND EXTRACTION ARRANGEMENT IS SCHEMATIC ONLY

THE VALUE OF GENERATOR OUTPUT SHOWN ON THIS HEAT BALANCE IS AFTER ALL POWER FOR EXCITATION AND OTHER TURBINE-GENERATOR AUXILIARIES HAS BEEN DEDUCTED

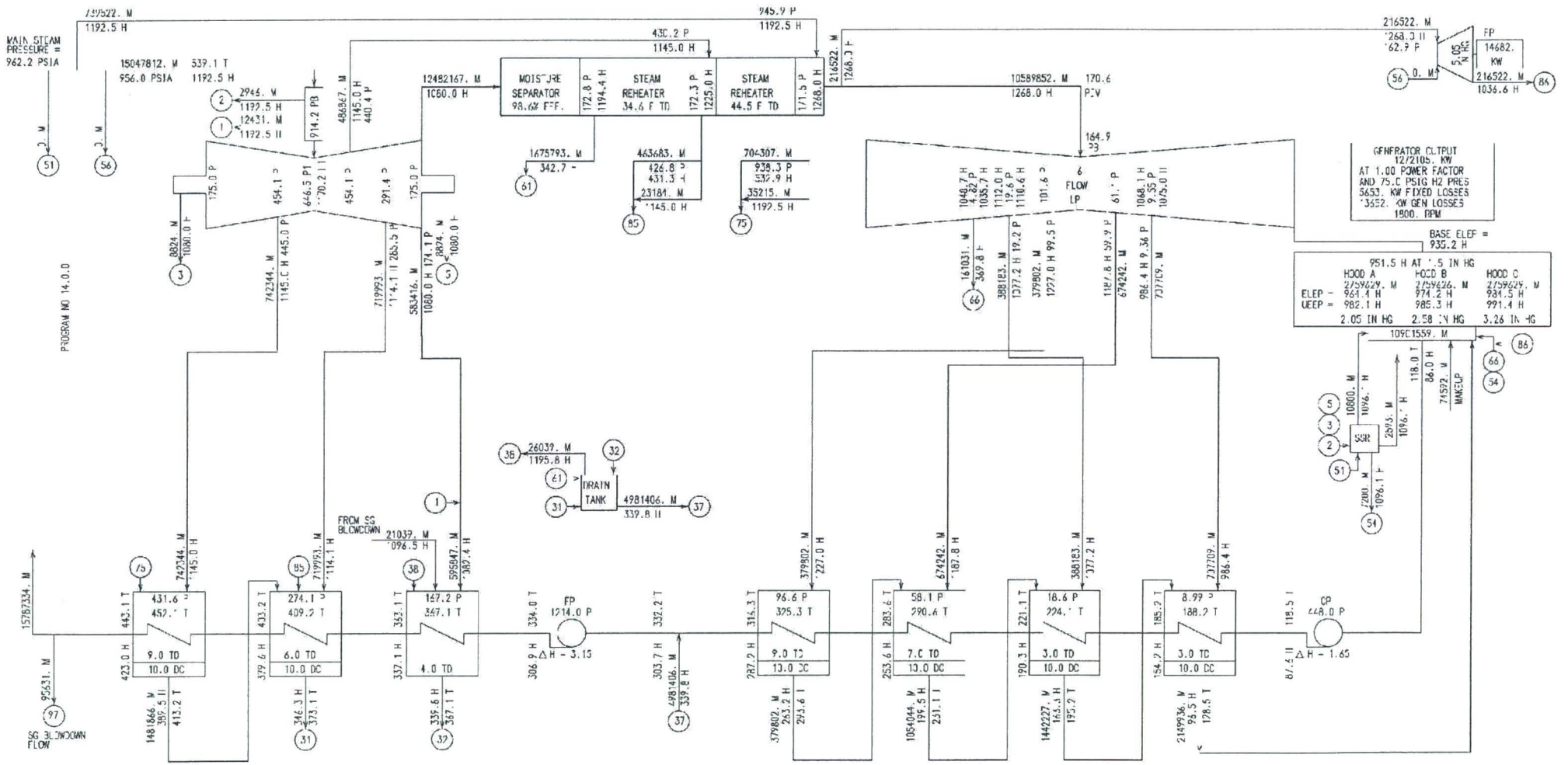

VALVE BEST POINT NET HEAT RATE = (15047812. (1192.5 - 423.0) + 739522. (1192.5 - 423.0) + 95631. (1096.5 - 423.0)) / 1272105. = 9600 BTU/KW-HR

WOLF CREEK NUCLEAR OPERATING CORP.
WOLF CREEK UNIT 1 - TB. NO. 170X734

NEW HP DENSE PACK AND NEW 43" LSB LP STEAMPATH.
OPERATION AT 0.954 TFR WITH MAY 2010 PLANT DATA.
0.0% FEEDWATER BYPASS OF TOP 3 FW HEATERS.
NSSS THERMAL POWER = 3579.0 MWt (RATED POWER).
TURBINE THROTTLE PRESSURE = 956.0 PSIA.
TURBINE THROTTLE ENTHALPY = 1192.5 BTU/LBM.

NOTE: HEAT BALANCE CALCULATIONS ARE BASED ON DELTA MWe AT RATED NSSS POWER RELATIVE TO BASELINE HEAT BALANCE 1LG0521-30 REV. 1 AND ARE ON A VALVE BEST POINT BASIS.

LEGEND - CALCULATIONS BASED ON 1967 ASME STEAM TABLES
M - FLOW-LB/HR
P - PRESSURE-PSIA
H - ENTHALPY-BTU/LB
T - TEMPERATURE-F DEGREES

1272105. KW 2.05 / 2.58 / 3.26 IN HG ABS 0.50 PCT MU
TC6F 43.0 IN LSB 1800 RPM
956.0 PSIA 1192.5 BTU / LB 2 STAGE REHEAT
GEN-1409000.KVA 0.92 PF LIQ 75.0 PSIG H2 PRES

GENERAL ELECTRIC COMPANY, SCHENECTADY NY

1LG0521-02 REV. 2

06/23/10

WOLF CREEK
UPDATED SAFETY ANALYSIS REPORT

REV.28

FIGURE 10.1-2
TURBINE CYCLE HEAT BALANCE
100 PERCENT OF MANUFACTURER'S GUARANTEED RATING

1LG0521-01 REV. 1

©General Electric Company. This document and information is GE Confidential & Proprietary Information. No part of this document and information may be reproduced, transmitted, stored in a retrieval system nor translated into any human or computer language, in any form or by any means, electronic, mechanical, magnetic, optical, chemical, manual, or otherwise, without the prior written permission of the General Electric Company.

TURBINE AND EXTRACTION ARRANGEMENT IS SCHEMATIC ONLY

CALCULATED DATA - NOT GUARANTEED

RATING FLOW IS 15047812. M AT INLET STEAM CONDITIONS OF 956.0 PSIA AND 1192.5 H
TO MINIMIZE THE POSSIBILITY THAT THE TURBINE WILL BE UNABLE TO PASS RATING FLOW BECAUSE OF VARIATIONS IN FLOW COEFFICIENTS FROM EXPECTED VALUES, SHOP TOLERANCES ON DRAWINGS, ETC, THE TURBINE IS BEING DESIGNED FOR A DESIGN FLOW OF 15770107. M
THE VALUE OF GENERATOR OUTPUT SHOWN ON THIS HEAT BALANCE IS AFTER ALL POWER FOR EXCITATION AND OTHER TURBINE GENERATOR AUXILIARIES HAS BEEN DEDUCTED

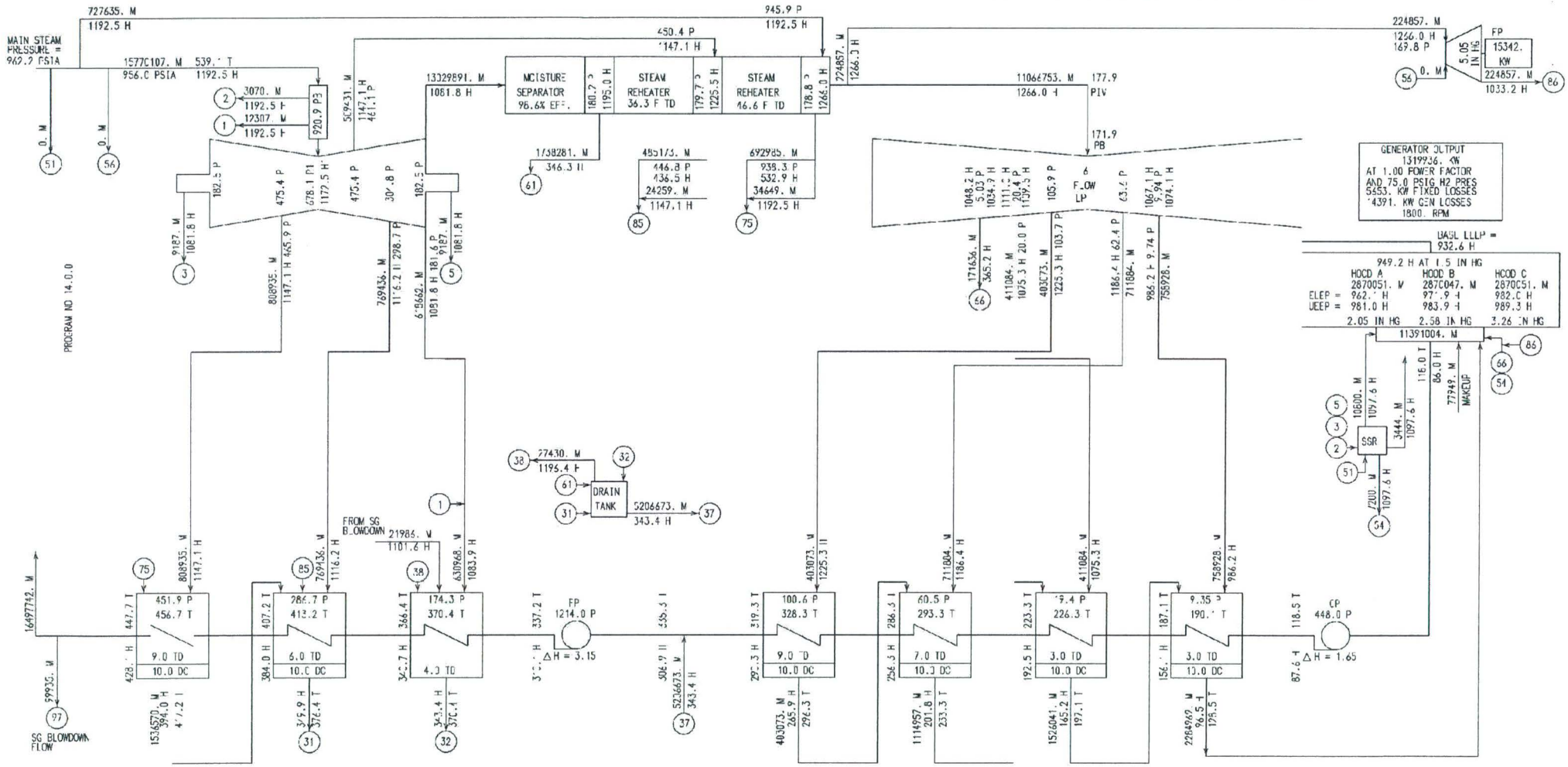

VALVE BEST POINT NET HEAT RATE = (15770107. (1192.5 - 428.1) + 727635. (1192.5 - 428.1) + 99935. (1101.6 - 428.1)) / 1319936. = 9605 BTU/KW-HR

WOLF CREEK NUCLEAR OPERATING CORP.
WOLF CREEK UNIT 1 - TB. NO. 170X734

NEW HP DENSE PACK AND NEW 43" LSB LP STEAMPATH.
VWO FLOW OPERATION WITH MAY 2010 PLANT DATA.
0.0% FEEDWATER BYPASS OF TOP 3 FW HEATERS.
NSSS THERMAL POWER = 3715.5 MWt.
TURBINE THROTTLE PRESSURE = 956.0 PSIA.
TURBINE THROTTLE ENTHALPY = 1192.5 BTU/LBM.

NOTE: HEAT BALANCE CALCULATIONS ARE BASED ON DELTA MWe AT RATED NSSS POWER RELATIVE TO BASELINE HEAT BALANCE 1LG0521 30 REV. 1 AND ARE ON A VALVE BEST POINT BASIS.

LEGEND - CALCULATIONS BASED ON 1967 ASME STEAM TABLES
M - FLOW-LB/HR
P - PRESSURE PSIA
H - ENTHALPY BTU/LB
T - TEMPERATURE-F DEGREES

1272105. KW 2.05 / 2.58 / 3.26 IN HG ABS 0.5 PCT MU
TC6F 43.0 IN LSB 1800 RPM
956.0 PSIA 1192.5 BTU / LB 2 STAGE REHEAT
GEN **1409000.KVA 0.92 PF LIQ** 75.0 PSIG H2 PRES

1LG0521-01 REV. 1

06/23/10

GENERAL ELECTRIC COMPANY, SCHENECTADY NY

WOLF CREEK
UPDATED SAFETY ANALYSIS REPORT

REV.28

FIGURE 10.1-3

TURBINE CYCLE HEAT BALANCE
VALVES WIDE OPEN
105 PERCENT OF MANUFACTURER'S GUARANTEED RATING

"This Figure has been Deleted"

FIGURE 10.1-4

Turbine Cycle Heat Balance 104.5% Thermal Power Update and 0 °F T_{HOT} Reduction 1% Steam Generator Blowdown

10.2 TURBINE GENERATOR

The turbine generator (T-G) receives high pressure steam from the main steam system and converts a portion of its thermal energy into electrical energy. The T-G also supplies extraction steam and condensate for feedwater heating and steam for driving the steam generator feedwater pump turbines.

During Refueling 18 (RF18), three replacement LP-steampaths comprised of rotors, inner casings and diaphragms, and a single HP steampath consisting of a rotor and diaphragms were installed. The last stage buckets for the LP rotors increased from 38" to 43". The new DensePack™ HP increased from 7-stages to 9-stages. Each rotor was manufactured by General Electric (GE) from a single piece of alloy steel forging employing integral wheels and couplings (monoblock design), which resulted in reduced rotor stresses and reduced potential for cracking, while increasing turbine efficiency.

To maintain configuration consistency, the numbering of the stages for the new 9-stage HP turbine are 1, 2, 3, 3a, 4, 5, 5a, 6 and 7. Therefore, the three LP turbines maintain their original stage numbering, starting with the 8th stage. This allows all extraction locations to remain numbered per the original design.

10.2.1 DESIGN BASES

10.2.1.1 Safety Design Bases

The T-G serves no safety function and has no safety design basis.

10.2.1.2 Power Generation Design Bases

POWER GENERATION DESIGN BASIS ONE - The T-G is intended for base load operation. The gross generator outputs as rated reactor power and stretch of valves wide open (VWO) power are given on Figures 10.1-2 and 10.1-3, respectively. The gross generator output at the power rerate operating condition is given on Figure 10.1-4.

POWER GENERATION DESIGN BASIS TWO - The T-G load change characteristics are compatible with the instrumentation and control system which coordinates T-G and reactor operation.

POWER GENERATION DESIGN BASIS THREE - The T-G is designed to accept a sudden loss of full load without exceeding design over-speed.

POWER GENERATION DESIGN BASIS FOUR - The T-G is designed to permit periodic testing of steam valves important to overspeed protection, emergency overspeed trip circuits, and several other trip circuits under load.

POWER GENERATION DESIGN BASIS FIVE - The failure of any single component will not cause the rotor speed to exceed the design speed.

POWER GENERATION DESIGN BASIS SIX - Unlimited access to all levels of the turbine area under all operating conditions is provided.

10.2.2 SYSTEM DESCRIPTION

10.2.2.1 General Description

The T-G system is shown in Figure 10.2-1. Performance characteristics are provided in Section 10.1.

The turbine consists of double-flow, high-pressure, and low-pressure elements in tandem. Moisture separation and reheating of the steam are provided between the high-pressure and low-pressure elements by four combined moisture separator reheater (MSR) assemblies. Two assemblies are located on each side of the T-G center-line. The generator is coupled directly to the turbine shaft. It is equipped with an excitation system coupled directly to the generator shaft.

T-G accessories include the bearing lubrication oil system, turning gear, hydrogen system, seal oil system, stator cooling water system, exhaust hood spray system, steam seal system, and turbine supervisory instrument (TSI) system.

The analog Electro-Hydraulic Control (EHC) system has been replaced with a new digital Turbine Control system (TCS). The new system utilizes an Ovation-Based Distributed Control system (DCS). Two redundant sets of controllers are used in the turbine control system. The turbine control system architecture is based on combined functional and hardware redundancy to create a robust and reliable system. In order to increase reliability of the new TCS, the Ovation system is provided with redundancy as follows:

1. Two 100% capable controllers, one primary and one backup dedicated to Over Speed Protection and Trip function – Ovation Emergency Trip System (ETS).
2. Two 100% capable controllers, one primary and one backup dedicated to Turbine Control and providing backup Over Speed Protection and Trip Function – Ovation Operator Auto/Overspeed Protection and Control (OA/OPC).
3. The system is configured to provide cross trips between the two sets of redundant controllers.
4. Diverse Overspeed Protection (DOPS) using Woodward ProTech GII modules.

The ETS and the OA/OPC controllers interface with two sets of diverse and independent speed probes, which measure turbine speed. One set consists of three passive speed probes which interface to the ETS controller. The other set consists of three active probes which interface to the OA/OPC controller.

Both of the TCS controllers – OA/OPC and ETS – perform the Emergency Trip function. Each controller has an associated solenoid-operated valve Testable Dump Manifold (TDM) that releases Electro-Hydraulic (EH) oil pressure, and causes the main stop valves, the control valves, the intermediate stop valves, and the intercept valves to rapidly close, thus blocking the flow of steam to the turbine. To prevent both function failure and spurious activation from a single solenoid control circuit failure, each manifold operates on a “two-out-of-three” coincidence voting logic.

An additional set of three passive speed probes interface with the Woodward ProTech GII modules to provide a diverse overspeed trip. DOPS contact outputs trip the turbine through the ETS TDM using ”two-out-of-three” coincidence voting logic.

The T-G unit and associated piping, valves, and controls are located completely within the turbine building. There are no safety-related systems or components located within the turbine building (See Figures 1.2-29 through 1.2-42), hence any failures associated with the T-G unit will not affect any safety-related equipment. Failure of T-G equipment does not preclude safe shutdown of the reactor coolant system. There is unlimited access to T-G components and instrumentation associated with T-G overspeed protection, under all operating conditions.

10.2.2.2 Component Description

The MSRs, MSR drain tanks, stator water coolers, and stator water demineralier are designed to ASME Section VIII. The balance of the T-G is designed to General Electric (GE) Company Standards.

MAIN STOP AND CONTROL VALVES - Four high pressure, angle body, main stop and control valve chests admit steam to the high pressure (HP) turbine. The primary function of the main stop valves is to quickly shut off the steam flow to the turbine under emergency conditions. The primary function of the control valves is to control steam flow to the turbine in response to the turbine control system. The four sets of valves are located at El. 2033, south of the high pressure turbine shell. The valve chests are made of a copper-bearing, low-carbon steel.

The main stop valves are single disc type valves operated in an open-closed mode either by the emergency trip, fluid operated, fast acting valve for tripping, or by a small solenoid valve for testing. The discs are totally unbalanced and cannot open against full differential pressure. An internal bypass valve is provided in the number two main stop valve to pressurize the below seat areas of the four valves. Springs are designed to close the main stop valve in 0.19 second under the emergency conditions listed in Section 10.2.2.3.4.

Each main stop valve has one inlet and one outlet. The outlet of each valve is welded directly to the inlet of a control valve casing. The four stop valves are also welded together through below-seat equalizers. Each stop valve contains a permanent steam strainer to prevent foreign matter from entering the control valves and turbine.

The control valves are poppet-type valves with venturi seats. The valve discs have sperical seats to ensure tight shutoff. The valves are of sufficient size, relative to their cracking pressure, to require partial balancing. This is accomplished by a skirt on the valve disc sliding inside a balance chamber. When a control valve starts to open, a small internal valve is opened to decrease the pressure in the balance chamber. Further lifting of the stem opens the main disc. Each control valve is operated by a single acting, spring-closed servomotor opened by high pressure fire-resistant fluid through a servo valve. The control valve is designed to close in 0.20 seconds.

HIGH PRESSURE TURBINE – As discussed at the beginning of Section 10.2, a new nine-stage HP turbine was installed in RF18, replacing the original seven-stage turbine. To maintain configuration consistency, the numbering of the stages for the new 9-stage HP turbine are 1, 2, 3, 3a, 4, 5, 5a, 6 and 7. This allows the extraction locations to remain

numbered per the original design. The HP turbine receives steam through four pipes, called steams leads, one from each control valve outlet. The steam is expanded axially across nine stages of stationary and moving blades. Steam pressure immediately downstream of the first stage is used as a load reference signal for reactor control. Extraction steam from the third turbine stage supplies the seventh stage of feedwater heating and the first stage of steam reheating. Extraction steam from the fifth and seventh turbine stages supplies the sixth and fifth stages of feedwater heating, respectively. Turbine exhaust steam is collected in eight pipes called cold reheat pipes, four at each end of the turbine.

The new HP rotor was forged from a single piece of alloy steel, per GE specification (similar to ASTM A470), employing integral wheels and couplings (monoblock design). The monoblock rotor is designed with modern low stress dovetail profiles. There are nine stages of advanced design buckets (TE and GE -18 rows). The buckets utilize a 12 percent Chromium Alloy, similar to ASTM A479 Type 403.

MOISTURE SEPARATOR REHEATERS - Four horizontal cylindrical-shell, combined moisture separator reheater (MSR) assemblies are installed in the steam lines between the high and low pressure turbines. The MSRs serve to dry and reheat the steam before it enters the low pressure turbine. This improves cycle efficiency and reduces moisture-related erosion and corrosion in the low pressure turbines. Steam from the high pressure turbine is piped into the bottom of the MSR. Moisture is removed in chevron-type moisture separators, and is drained to the moisture separator drain tank and from there to the heater drain tank. The dry steam passes upward across the tube bundle of the first stage reheater. The first stage reheater steam source is extraction steam from the third HP turbine stage. The reheater is drained to the first stage reheater drain tank and from there to the sixth feedwater heater. The dried and reheated steam then passes through the tube bundle of the second stage reheater. The second stage reheater steam source is main steam. The reheater is drained to the second stage reheater drain tank and from there to the seventh feedwater heater. Safety valves are provided on the MSR for overpressure protection.

COMBINED INTERMEDIATE VALVES - Two combined intermediate valves (CIV) per LP turbine are provided, one in each steam supply line, called the hot reheat line, from the MSR. The CIV consists of two valves sharing a common casing. The two valves are the intercept valve and the intermediate stop valve. Although they utilize a common casing, these valves have entirely separate operating mechanisms and controls. The function of the CIVs is to protect the turbine against over-speed from stored steam between the main stop and control valves and the CIVs. Three CIVs are located on each side of the turbine.

Steam from the MSR enters the single inlet of each valve casing, passes through the permanent basket strainer, past the intercept valve and stop valve disc, and discharges through a single outlet connected to the LP turbine. The CIVs are located as close to the LP turbine as possible to limit the amount of controlled steam available for overspeeding the turbine. Upon loss of load, the intercept valve first closes then throttles steam to the LP turbine, as required, to control speed and maintain synchronization. It is capable of opening against full system pressure. The intermediate stop valve closes only if the intercept valves fail to operate properly. It is capable of opening

against a pressure differential of approximately 15 percent of the maximum expected system pressure. The intermediate stop valve and intercept valve are designed to close in 0.2 second.

LOW PRESSURE TURBINES - As discussed at the beginning of Section 10.2, new LP steam paths were installed in RF18. To maintain configuration consistency, the numbering of the stages for the new 9-stage HP turbine are 1, 2, 3, 3a, 4, 5, 5a, 6 and 7. This allows the LP turbine stages to remain numbered per the original design (8 through 14). Each LP turbine receives steam flow from two CIVs. The steam is expanded axially across seven stages of stationary and moving buckets. Extraction steam flow from stages 8, 9, 11 and 12 supply the fourth, third, second and first stage of feedwater heating, respectively. The ninth stage extraction is also the normal source of turbine gland sealing steam. The thirteenth turbine stage is a moisture removal stage where moisture is removed to protect the last stages from erosion induced by water droplets. This extraction is drained directly to the condenser.

The LP steam paths were designed using 43-inch last stage buckets on monoblock rotors with compatible diaphragms and new inner casings. The steam paths consist of three sets of seven stage, double-flow rotors without bore, utilizing an alloy similar to ASTM A470 and designed with modern low-stress dovetails.

Forged bucket material utilizes 12 percent Chromium Alloy, similar to ASTM A470 XM30. The last stage leading edge buckets are flame-hardened for protection against water droplet erosion and are designed for continuous operation at exhaust pressures up to 5.5 inches HgA. The prior two stages are also flame-hardened for erosion protection.

EXTRACTION NONRETURN VALVES - Upon loss of load, the steam contained within turbine extraction lines would flow back into the turbine, across the remaining turbine stages, and into the condenser. Condensate contained in feedwater heaters will flash to steam under this condition and contribute to the backflow of steam. Extraction nonreturn valves are installed in the third, fifth, eighth, ninth, and eleventh stage turbine extraction lines to guard against this backflow of steam and the contribution it would make to a rotor overspeed condition. The nonreturn valves are free-swinging. The eleventh stage nonreturn valves have double "D" swing plates. The plates are closed by a torsion spring as flow decreases. For the remaining nonreturn valves, under normal operation, air bears against a piston which mechanically prevents a coiled spring from assisting in valve closure. Upon turbine trip, the air is dumped to atmosphere via the turbine control system's air relay dump valve.

GENERATOR - The generator operates at 1,800 rpm and is rated at 1,409,000 kVA at 75 psig hydrogen pressure and a 0.92 power factor. The stator core and rotor conductors are cooled by hydrogen circulated by fans mounted at each end of the generator shaft. Two water-cooled hydrogen coolers are mounted in the generator frame. A seal oil system isolated the hydrogen from the atmosphere. The stator conductors are water cooled.

The rotor consists of layers of field windings embedded in milled slots. The winding material is silver-bearing copper in preformed coils, carried in molded glass liners in the slots. The windings are held radially by steel slot wedges at the rotor outside diameter. The

wedge material maintains its mechanical properties at elevated temperature, which could occur as a result of loss of cooling, for example. The magnetic field is generated by dc power which is fed to the windings through collector rings located outboard of the main generator bearings. The rotor body and shaft is machined from a single, solid steel forging. The material is a nickel-molybdenum-vanadium alloy steel. Detailed examinations and tests are carried out at each stage of rotor manufacture. These include:

a. Material property checks on test specimens taken from the forging

b. Ultrasonic tests for internal flaws

c. Photomicrographs for examination of microstructure

d. Magnetic particle and ultrasonic examination of the bore

e. Surface finish tests of slots for indication of a stress riser

The rotor end turns are restrained against centrifugal force by retaining rings. The rings are the highest stressed components of the generator. The retaining ring is shrunk on a machined fit at the end of the rotor body. It is locked against axial and circumferential movement by a locking ring screwed into the retaining ring and keyed to the rotor body. The ring material is a manganese-chromium, alloy steel forging. All retaining ring forgings are tested for chemical composition, tensile properties, Charpy-V notch impact properties, grain size, internal flaws by ultrasonic inspection, surface flaws by dye penetrant inspection, and performance by cyclic hydrostatic testing.

10.2.2.3 System Operation

10.2.2.3.1 Normal Operation

Under normal operation, the main stop valves and CIVs are wide open. Operation of the T-G is under the control of the TCS OA/OPC controller. The OA/OPC controller performs speed control, load control and flow control as well as backup overspeed protection.

Speed Control

The OA/OPC controller receives speed feedback from three new active speed sensor probes that are installed into the existing speed bracket with no mechanical modifications required. The probes are powered by redundant 24VDC power supplies within the drop. The three signals are received into the system via separate modules located on separate I/O branches. The median speed signal is selected to provide speed feedback to the system. In the event of a lost speed signal the system operates on the average of the two remaining signals. When the loss of two signals occurs in speed control the turbine is tripped. A rate of acceleration is calculated from the selected signal to determine appropriate actions of the control valves.

A speed setpoint and a rate are entered by the operator via a graphical interface. The speed control ramps to the speed setpoint at the rate entered by the operator using closed loop control. The operator cannot enter a critical speed value as a “go to” speed in RPM.

Load Control / Flow Control

The OA/OPC controller controls the load of the turbine. The load control has two operator selectable loops, the First Stage Pressure (FSP) or megawatt (MW) loop. When the MW loop is placed into service, the system maintains closed loop control using two new megawatt transducers as feedback. When the first stage pressure loop is placed into service, the system uses three new pressure transmitters as a median selected value for feedback. The load control loops are mutually exclusive where only one can be placed into service at a time. The load control function generates a flow reference that is sent to the control and intercept valves for position control. Each modulating valves position is controlled by redundant valve positioner modules. The operator enters a load setpoint and rate in the same manner as the speed control function. The values entered are checked for exceeding limits and are rejected in such situations. The load setpoint of the turbine can be changed manually or automatically depending on circumstances which cause the T-G protection circuits to come into action. For example, stator cooling water system trouble will automatically cause the maximum permissible load to be reduced. The load rates are generated within the system by predefined values. The reactor is capable of accepting these rates without abnormal effect or bypass of steam to the atmosphere or condenser.

The load control receives a speed error signal to correct speed variations while in load control. The error is limited to allow correction in the speed increasing direction only.

10.2.2.3.2 Operation Upon Loss of Load

Upon loss of generator load, the EHC system acts to prevent rotor speed from exceeding design overspeed. Refer to Table 10.2-1 for the description of the sequence of events following loss of turbine load. Failure of any single component will not result in rotor speed exceeding design overspeed (i.e. 120 percent of rated speed). The following component redundancies are employed to guard against overspeed:

a. Main stop valves/Control valves

b. Intermediate stop valves/Intercept valves

c. OA/OPC controller - Primary speed control / Overspeed trip / Speed detector module trip

d. Fast acting solenoid valves/Emergency trip fluid system (ETS)

e. ETS controller - Overspeed trip / Speed detector module trip / Diverse overspeed protection system trip

The main stop valves and control valves are in series and have completely independent operating controls and operating mechanisms. Closure of either all four stop valves or all four control valves shuts off all main steam flow to the HP turbine. The combined stop and

intercept valves are also in series and have completely independent operating controls and operating mechanisms. Closure of either all six stop valves or all six intercept valves shuts off all MSR outlet steam flow to the three LP turbines.

The OA drop speed control receives speed feedback from three new active speed sensor probes that are installed into the existing speed bracket. Increase of speed will begin to close the control valves. In the event of a lost speed signal the system operates on the average of the two remaining signals. When the loss of two signals occurs in speed control the turbine is tripped.

Fast acting solenoid valves initiate fast closure of control valves under load rejection conditions that might lead to rapid rotor acceleration. The solenoid valve dumps ETS pressure at the control valve. Valve action occurs when power exceeds load by more than 40 percent and generator current is lost suddenly. The ETS initiates fast closure of the valves whether the fast-acting solenoid valves work or not. The ETS pressure is dumped by either the ETS TDM or the OA/OPC TDM.

If speed control should fail, the overspeed trip devices must close the steam admission valves to prevent turbine overspeed. Woodward ProTech GII modules provide a diverse overspeed trip as a replacement for the mechanical trip bolt. It is set to operate at 110 percent of rated speed. Ovation ETS and OA/OPC controller overspeed trip setpoints are 110% (1980 RPM). Ovation SDM hard-wired trips provide a backup overspeed trip set at 111% (1998 RPM). Component redundancy and fail safe design of the ETS hydraulic system and trip circuitry provide turbine overspeed protection. The combination of Ovation ETS and OA/OPC controller trips, hardwired overspeed protection found within the Ovation Speed Detector Modules (SDMs), and Woodward ProTech GII modules provide diverse measures for safeguarding the turbine. Overspeed trips are initiated through either the ETS TDM or the OA/OPC TDM. Single component failure does not compromise trip protection.

OA/OPC Controller

OA/OPC TDM configuration is de-energized to trip and can be actuated by any of the following conditions:

1. The OA/OPC controller generates a trip output based on application logic that is generated from soft trip inputs, overspeed detection and cross trips from the ETS controller.
2. Ovation speed detector modules use normally closed relay output contacts wired to de-energize the TDM when an overspeed condition occurs.
3. Actuation of both main console hardwired pushbuttons de-energizes the TDM when a manual trip is initiated.

Loss of both primary and backup 24 Vdc auxiliary power de-energizes the TDM which results in a trip. Loss of power trips the turbine through fail safe circuitry.

ETS Controller

The ETS TDM configuration is de-energized to trip and can be actuated by any of the following conditions:

1. The ETS controller generates a trip output based on application logic that is generated from soft trip inputs, overspeed detection and cross trips from the OA/OPC controller.
2. Ovation speed detector modules use normally closed relay output contacts wired to de-energize the TDM when an overspeed condition occurs.
3. Woodward ProTech GII modules use normally closed relay output contacts wired to de-energize the TDM when an overspeed condition occurs.
4. Actuation of both main console hardwired pushbuttons de-energizes the TDM when a manual trip is initiated.

Loss of two-out-of-three 125 Vdc power supplies from the station batteries de-energizes the TDM which results in a trip.

Loss of power trips the turbine through fail safe circuitry. The TDMs are powered via separate systems. The ETS TDM is powered via three independent 125VDC station batteries. The OA/OPC TDM is powered from redundant 24VDC power supplies powered by two separate 120VAC UPS systems.

10.2.2.3.3 Testing

Each TDM can be tested online via Ovation HMI displays to verify the solenoids have de-energized. Only one solenoid and one TDM can be tested at a time. The overspeed trip devices can be tested in accordance to the plant operation. The soft overspeed trip can be tested by setting a value below normal operating speed during startup. The hard-wired trips can be tested independently by removing a speed probe from operation and injecting a signal from a function generator that will exceed the module set threshold. This test will only activate the signal and solenoid for the hardwired circuit.

10.2.2.3.4 Turbine Trips

a. Emergency trip pushbuttons in control room. Two pushbuttons must be pressed simultaneously.

b. Moisture separator high level

c. Low condenser vacuum

d. Low lube oil pressure

e. Deleted

f. Reactor trip

g. Thrust bearing wear

h. Overspeed (ETS TDM and OA TDM)

i. Manual trip handle on TDM stand

j. Loss of stator coolant (2 minute and 3.5 minute trip)

k. Low hydraulic fluid pressure

l. Any generator trip

m. Loss of TDM electrical power

n. Excessive vibration

o. AMSAC

10.2.3 TURBINE INTEGRITY

10.2.3.1 Materials Selection

The material used for the new monoblock rotors is a forged nickel-chrome-molybdenum-vanadium alloy that is similar to ASTM Class 6. A GE material specification was used for the actual material in order to tightly control the condition of the resulting forgings. Ranges of key alloying elements were defined; maximum permissible levels of tramp elements were defined; process procedures affecting properties, such as heat treatments were specified; and the permissible ranges or levels of mechanical properties at each of the acceptance test locations were specified. The forging alloys used in the HP and LP rotors are extremely similar. The property differences are due to the range of strengths and properties needed for the nuclear HP and LP rotor applications.

10.2.3.2 Fracture Toughness

The original turbine rotors had shrunk on disks and couplings. New turbine rotors were installed in RF18. Each rotor was manufactured by GE from a single piece of alloy steel forging employing integral wheels and couplings (monoblock design), which resulted in reduced rotor stresses and reduced potential for cracking. The brittle fracture failure mechanism in rotors with shrunk on wheels was due to the initiation and growth of stress corrosion cracks to critical size in the exposed wheel keyway surfaces. The probability of this failure mode is dependent on environment, speed, temperature and material properties, as well as inspection methods and inspection intervals. For a shrunk-on wheel operated at, or near, normal running speed, the probability of bursting and thus of missile generation, was dominated by this fracture mechanism. The new rotors are of monoblock construction and do not have shrunk-on wheels. Therefore, the formerly dominant brittle fracture failure mechanism is eliminated in monoblock rotors.

With the installation of the new monoblock rotors, the concern of rotor disk integrity is eliminated.

10.2.3.3 High Temperature Properties

Primarily, the life limiting factors for rotors are attributable to the higher temperature dependent phenomena, typically in the range of 650°F or higher. Material creep, thermal fatigue and embrittlement are the major factors that can limit a rotor’s useful life. The Wolf Creek rotor components operate at temperatures less than 575°F. Therefore, the material creep rupture at high temperatures is not a consideration; and embrittlement and the rotor thermal transient stress that can cause low cycle fatigue are not significant factors. The primary design parameters in the design of the nuclear monoblock rotors are therefore the shaft bending and torsional stresses, centrifugal stress, and

stress corrosion cracking protection. These factors have been properly engineered, with operating conditions and reasonably controlled environment, to design the rotors for the intended life.

10.2.3.4 Turbine Design

In the design of the monoblock rotor, the rotor dynamic bending stresses and torsional stresses were kept to a minimum by maintaining reasonable operating margins between the rotor natural frequencies and the known potential stimulas. The rotor geometry was also optimized to accommodate manufacturing and operating tolerances such as bearing misalignment and electrical transients, etc. These design practices ensure that the potential vibratory stresses are kept below the fatigue strength endurance limit of the component materials.

10.2.3.5 Preservice Inspection

The preservice procedures and acceptance criteria are as follows:

a. The rotor forgings were subjected to an NDT acceptance procedure by the forging vendors and an NDT acceptance procedure by GE.

b. Preliminary pre-service peripheral ultrasonic examinations were performed on the monoblock rotor forgings. The rotor forgings were semi-machined to provide a suitable surface for the ultrasonic inspection. After the final heat treatment, a battery of NDT testing was performed to ensure rotor structural integrity. Prior to accepting a monoblock forging, extensive specimen testing was performed to assure that the rotor met the application requirements.

c. All finished machined surfaces are subjected to a magnetic particle test with no flaw indications permissible.

d. Each fully bucketed turbine rotor assembly is spin tested at 20-percent overspeed.

Additional preservice inspections include air leakage tests performed to determine that the hydrogen cooling system is tight before hydrogen is introduced into the generator casing. The hydrogen purity is tested in the generator after hydrogen has been introduced. The generator windings and all motors are megger tested. Vibration tests are performed on all motor-driven equipment. Hydrostatic tests are performed on all coolers. All piping is pressure tested for leaks. Motor-operated valves are factory leak tested and inplace tested once installed.

10.2.3.6 Inservice Inspection

The inservice inspection program for the turbine assembly includes the disassembly of the turbine and complete inspection of all normally inaccessible parts, such as couplings, coupling bolts, turbine shafts, low-pressure turbine buckets, and high-pressure rotors. During plant shutdown coinciding with the inservice inspection schedule for ASME Section III components, as required by the ASME Boiler and Presser Vessel Code, Section XI, turbine inspection is done in sections during the refueling outages so that every 100,000 operating hours a total inspection has been completed at least once.

This inspection consists of visual and surface examinations as indicated below:

a. Visual examination of all accessible surfaces of rotors

b. Visual and surface examination of all low-pressure buckets

c. 100-percent visual examination of couplings and coupling bolts

The inservice inspection of valves important to overspeed protection includes the following:

a. All main stop valves, control valves, extraction nonreturn valves, and CIVs are tested underload. Operator Workstation Graphic displays will permit full stroking of the stop valve, control valves, and CIVs. Valve position indication is provided on the graphic display. No load reduction is necessary before testing main stop valves and CIVs. Extraction nonreturn valves are tested locally by equalizing air pressure across the air cylinder. Movement of the valve arm is observed upon action of the spring closure mechanisms.

b. Main stop valves, control valves, and CIVs are tested every four (4) months. However, this frequency may be extended on a case-by-case basis with an approved engineering evaluation that has been evaluated under 10 CFR 50.65(a)(4). Extraction nonreturn valves are tested weekly. Closure of each valve during test is verified by direct observation of the valve motion.

c. All main stop, main control, and CIVs are inspected on a frequency that meets or exceeds the minimum inspection requirements established by the company's insurance provider (Nuclear Electric Insurance Limited) Loss Control Standards. These inspections are conducted for:

   Wear of linkages and stem packings

   Erosion of valve seats and stems

   Deposits on stems and other valve parts which could interfere with valve operation

   Distortions, misalignment

   Inspection of all valves of one type will be conducted if any unusual condition is discovered

10.2.4 EVALUATION

The reactor system is a PWR type; hence, under normal operating conditions, there are no significant radioactive contaminants present in the steam and power conversion system.

No radiation shielding is required for the turbine-generator system. Continuous access to the components of the system for inservice inspection, etc., is possible during all operating conditions. Even in the event of a large primary-to-secondary steam generator leak, the T-G

system will not become contaminated to the extent that access is precluded.

A full discussion of the radiological aspects of primary-to-secondary leakage, including anticipated operating concentrations of radioactive contamination, anticipated releases to the environment, and limiting conditions for operation, is included in Chapter 11.0.

10.2.5 REFERENCES

1. Begley, J. A., and Logsdon, W. A., "Correlation of Fracture Toughness Charpy Properties for Rotor Steels," Westinghouse, Scientific Paper 71-1E7-MSLRF-P1, July 26, 1971

2. Spencer, R.C., and Timo, D. P., "Starting and Loading of Turbines," General Electric Company, 36th Annual Meeting of the American Power Conference, Chicago, Illinois, April 29-May 1, 1974

3. Engineering Design Summary, WCNOC Turbine Upgrade Retrofit Project, General Electric Company, GE Energy Engineering Division, Schenectady, New York, Rev. A, ated 25 March 2010. Wolf Creek document number M-800-00391.

TABLE 10.2-1

EVENTS FOLLOWING LOSS OF TURBINE LOAD WITH POSTULATED EQUIPMENT FAILURES

Approximate Speed-Percent	Event
100	Full load is lost. Speed begins to rise.
101	Control and intercept valves begin to close. As turbine stage pressures decrease, extraction nonreturn valves swing closed.
104	Control and intercept valves fully closed.
109	Peak transient speed with normally operating control system. Assume that power/load unbalance and speed control systems had failed prior to loss of load.
110	Diverse Overspeed Protection System (DOPS) or OA/ETS soft trip signals all valves to close. Operation of air relay dump valves releases spring closure mechanisms of extraction nonreturn valves.
111	Backup overspeed trip from OA/ETS Speed Detector Module (SDM) signals all valves to close.
113	All valves full closed, activated by DOPS trip.
114	All valves fully closed, activated by OA/ETS SDM trip.

TABLE 10.2-1 (Sheet 2)

Approximate Speed-Percent	Event
119	Peak transient speed with normal control system failure and operation of DOPS trip.
120	Peak transient speed with failure of both normal control systems and DOPS trips, proper operation of backup OA/ETS SDM overspeed trip.

10.3 MAIN STEAM SUPPLY SYSTEM

The function of the main steam supply system (MSSS) is to convey steam generated in the steam generators by the reactor coolant system to the turbine-generator system and auxiliary systems for power generation.

10.3.1 DESIGN BASES

10.3.1.1 Safety Design Bases

The portion of the MSSS from the steam generator to the steam generator isolation valves is safety related and is required to function following a DBA and to achieve and maintain the plant in a post accident safe shutdown condition.

SAFETY DESIGN BASIS ONE - The safety-related portion of the MSSS is protected from the effects of natural phenomena, such as earthquakes, tornadoes, hurricanes, floods, and external missiles (GDC-2).

SAFETY DESIGN BASIS TWO - The safety-related portion of the MSSS is designed to remain functional after a SSE and to perform its intended function following postulated hazards such as internal missile, or pipe break (GDC-4).

SAFETY DESIGN BASIS THREE - Component redundancy is provided so that safety functions can be performed, assuming a single active component failure coincident with the loss of offsite power (GDC-34).

SAFETY DESIGN BASIS FOUR - The MSSS is designed so that the active components are capable of being tested during plant operation. Provisions are made to allow for inservice inspection of components at appropriate times specified in the ASME Boiler and Pressure Vessel Code, Section XI.

SAFETY DESIGN BASIS FIVE - The MSSS uses design and fabrication codes consistent with the quality group classification assigned by Regulatory Guide 1.26 and the seismic category assigned by Regulatory Guide 1.29. The power supply and control functions are in accordance with Regulatory Guide 1.32.

SAFETY DESIGN BASIS SIX - The MSSS provides for isolation of the secondary side of the steam generator to deal with leakage or malfunctions and to isolate nonsafety-related portions of the system.

SAFETY DESIGN BASIS SEVEN - The MSSS provides means to dissipate heat generated in the reactor coolant system during hot shutdown and cooldown (GDC-34).

SAFETY DESIGN BASIS EIGHT - The MSSS provides an assured source of steam to operate the turbine-driven auxiliary feedwater pump for reactor cooldown under emergency conditions and for shutdown operations (GDC-34).

10.3.1.2 Power Generation Design Bases

POWER GENERATION DESIGN BASIS ONE - The MSSS is designed to deliver steam from the steam generators to the turbine-generator system for a range of flows and pressures varying from warmup to rated conditions. The system provides means to dissipate heat during plant step load reductions and during plant startup. It also provides steam to:

a. The turbine-generator system second stage reheaters

b. The main feed pump turbines and auxiliary feed pump turbine

c. The steam seal system

d. The turbine bypass system

e. The auxiliary steam reboiler

f. The process sampling system

g. Condenser spargers

10.3.2 SYSTEM DESCRIPTION

10.3.2.1 General Description

The MSSS is shown in Figure 10.3-1. The system conveys steam from the steam generators to the turbine-generator system. The system consists of main steam piping, atmospheric relief valves, safety valves, and main steam isolation valves. The turbine bypass system is discussed in detail in Section 10.4.4.

The MSSS instrumentation, as described in Table 10.3-1, is designed to facilitate automatic operation and remote control of the system and to provide continuous indication of system parameters. As described in Chapter 7.0, certain devices are involved in the steam line break protection system.

10.3.2.2 Component Description

Codes and standards applicable to the MSSS are listed in Table 3.2-1. The MSSS is designed and constructed in accordance with quality group B and seismic Category I requirements from the steam generator out to the torsional restraint downstream of the main steam isolation valves (MSIV). The remaining piping out to the turbine-generator and auxiliaries meets ANSI B31.1 requirements. Design data for the MSSS components are listed in Table 10.3-2.

MAIN STEAM PIPING - Saturated steam from the four steam generators is conveyed to the turbine generator by four 28-inch-O.D. lines. The lines are sized for a pressure drop of 25 psi from the steam generators to the turbine stop valves at turbine manufacturer's guaranteed conditions. Refer to Figure 10.1-2.

Each of the lines is anchored at the containment wall and has sufficient flexibility to provide for relative movement of the steam generators due to thermal expansion. The main steam line and associated branch lines between the containment penetration and the first torsional restraint downstream of the MSIV are designed to meet the "no break zone" criteria of NRC BTP MEB 3-1, as described in Section 3.6.

Each line is equipped with:

a. One atmospheric relief valve

b. Five spring-loaded safety valves

c. One main steam isolation valve and associated by-pass isolation valve

d. One low point drain, which is piped to the condenser through a drain valve

All main steam branch process line connections are made downstream of the isolation valves with the exception of the line to the atmospheric relief valve, connections for the safety valves, lines to the auxiliary feedwater pump turbine, and low point drains and high point vents.

Each steam generator outlet nozzle contains a flow restrictor of 1.4 square feet to limit flow in the event of a MSLB.

Immediately upstream of the turbine stop valves, each main steam pipe is cross connected, via an 18-inch line, to a 36-inch header to equalize pressure and flow to the four turbine stop valves. The 18-inch equalizing line limits the back flow from the three

intact steam generators in the event of a MSLB. The cross-connecting piping is sized to permit on-line testing of each turbine stop valve without exceeding allowable limits on steam generator differential pressure. Branch piping downstream of the isolation valves provides steam to the second stage reheaters, steam seal system, main feedwater pump turbines, turbine bypass system, auxiliary steam reboiler, and condenser spargers.

POWER-OPERATED ATMOSPHERIC RELIEF VALVE (ARV)- A power-operated, atmospheric, relief valve is installed on the outlet piping from each steam generator. The four valves are installed to provide for controlled removal of reactor decay heat during normal reactor cooldown when the main steam isolation valves are closed or the turbine bypass system is not available. The valves will pass sufficient flow at all pressures to achieve a 50 F per hour plant cooldown rate. The total capacity of the four valves is a minimum of 10 percent of rated main steam flow at steam generator no-load pressure. The maximum actual capacity of the relief valve at design pressure is limited to reduce the magnitude of a reactor transient if one valve would inadvertently open and remain open.

The atmospheric relief valves are air operated carbon steel, 8 inch 1,500 pound globe valves, supplied by a safety-related air supply (as described in Section 9.3.1), and controlled from Class IE sources. A nonsafety-related air supply is available during normal operating conditions. The capability for remote manual valve operation is provided in the main control room, the auxiliary shutdown panel and locally at the valves for AB-PV-2 and AB-PV-3. The valves are opened by pneumatic pressure and closed by spring action.

SAFETY VALVES - The spring-loaded main steam safety valves provide overpressure protection in accordance with the ASME Section III code requirement for the secondary side of the steam generators and the main steam piping. There are five valves installed in each main steam line. Table 10.3-2 identifies the valves, their set pressure, and capacities. The valves discharge directly to the atmosphere via vent stacks. The maximum actual capacity of the safety valves at the design pressure is limited to reduce the magnitude of a reactor transient if one of the valves would open and remain open.

MAIN STEAM ISOLATION VALVES AND BYPASS ISOLATION VALVES - One MSIV and associated bypass isolation valve (BIV) is installed in each of the four main steam lines outside the containment and downstream of the safety valves. The MSIVs are installed to prevent uncontrolled blowdown from more than one steam generator. The valves isolate the nonsafety-related portions from the safety-related portions of the system. The valves are bidirectional, double disc, parallel slide gate valves.

The MSIVs are designed to utilize the system fluid (main steam) as the motive force to open and close. The actuator is of simple piston, with the valve stem attached to both the discs and the piston. The valve actuation (open or close) is accomplished through a series of six electric solenoid pilot valves, which direct the system fluid to either the Upper Piston Chamber (UPS) or the Lower Piston Chamber (LPC), or a combination thereof. The six solenoid pilot valves are divided into two trains that are independently powered and controlled. Either train can independently perform the safety function to fast close the valve. The lower portion of the valve is the system medium chamber, which remains at system pressure during normal operation. The chamber is connected to the solenoid pilot valve leading to the LPC and UPC through ports internal to the actuator cylinder wall. The system medium chamber is isolated from the piston chamber by means of double stem seals and a leak tight backseat. The closure time for MSIVs is a bounding performance curves as a function of the system pressure relative to the closure time (Fig. 10.3-2). As can be seen from Fig. 10.3-2, the valve is capable of closing within seconds against the flow associated with line breaks on either side of the valve, assuming the most limiting normal operating conditions prior to the occurrence of the break. Valve closure capability is tested in the manufacturer's facility. Preservice and inservice tests are also performed. Preservice and inservice tests are also performed as discussed in Sections 10.3.4.2 and 10.3.4.3, respectively.

The main steam BIV is used when the MSIVs are closed to permit warming of the main steam lines prior to startup. The bypass valves are air-operated globe valves. For emergency closure, either of two separate solenoids, when de-energized, will result in valve closure. Electrical solenoids are energized from a separate Class IE source.

10.3.2.3 System Operation

NORMAL OPERATION - At low plant power levels, the MSSS supplies steam to the steam generator feedwater pump turbines, the auxiliary steam reboiler, and the turbine steam seal system. At high plant power levels, these components are supplied from turbine extraction steam. Steam is supplied to the second stage steam reheaters in the T-G system when the T-G load exceeds 15 percent.

If a large, rapid reduction in T-G load occurs, steam is bypassed (40 percent of VWO) directly to the condenser via the turbine bypass system. The system is capable of accepting a 50-percent load rejection without reactor trip and a full load rejection without lifting safety valves. If the turbine bypass system is not available, steam is vented to the atmosphere via the atmospheric relief valves (ARV) and the safety valves, as required.

EMERGENCY OPERATION - In the event that the plant must be shut down and offsite power is lost, the MSIV and other valves (except to the auxiliary feedpump turbine) associated with the main steam lines are closed. The ARV may be employed to remove decay heat and to lower the steam generator pressure to achieve cold

shutdown. If the atmospheric relief valve for an individual main steam line is unavailable due to the loss of its control gas supply or power supply, the associated safety valves will provide overpressure protection. The remaining ARVs are sufficient to achieve cold shutdown.

In the event that a DBA occurs which results in a SLIS (i.e. large steam line break), the MSIV automatically closes. Steam is automatically provided to the auxiliary feedwater pump turbine from two of four steam lines upon low-low level in two steam generators or loss of offsite power. Redundant check valves are installed in the lines to the turbine to ensure that only one steam generator will feed a ruptured main steam line and ensure that one steam generator is available to supply steam to the AFW turbine. The closure of three out of four MSIVs will ensure that no more than one steam generator can supply a postulated break. In addition, closure of the HP turbine steam stop and steam control valves prevents uncontrolled blowdown of more than one steam generator following a postulated main steam line break inside the containment. Reliability of the turbine trip system is discussed in Section 10.2. Coordinated operation of the auxiliary feedwater system (refer to Section 10.4.9) and ARV or safety valve may be employed to remove decay heat.

10.3.3 SAFETY EVALUATION

Safety evaluations are numbered to correspond to the safety design bases of Section 10.3.1.1.

SAFETY EVALUATION ONE - The safety-related portions of the MSSS are located in the reactor and auxiliary buildings. These buildings are designed to withstand the effects of earthquakes, tornadoes, hurricanes, flood, external missiles, and other appropriate natural phenomena. Sections 3.3, 3.4, 3.5, 3.7(B), and 3.8 provide the bases for the adequacy of the structural design of these buildings.

Note:
THE MSSS is designed to remain function after a tornado missile impact. The non-safety-related portions of the Main Steam Safety Valves (MSSV) and Atmospheric Relief Valves (ARV) Exahust stacks are located at the 2102’ -6 elevation of the Auxiliary Building on the roof of Area 5.

The atmospheric steam relief system is designed to withstand the effects of earthquake without loss of function. The system is designed and its components physically located to prevent loss of function from missile damage. Any two of the four atmospheric steam relief valves provide sufficient steam relief for hot standby requirements. Redundancy is accomplished on a system basis since any two of the four associated steam generators are adequate for the heat removal requirements. Diversity is accomplished by the spring-loaded safety valves operating as backup to the atmospheric steam relief valves.

An analysis performed demonstrates that an impact from a credible missile will not penetrate past more than one ARV Silencer and affect the adjacent ARV Silencer, thus not inhibiting the function of the atmospheric steam relief system (Reference 1).

An analysis performed demonstrates that an impact from a credible missile will not penetrate past more than one MSSV Exhaust Stack and affect the adjacent MSSV Exhaust Stack, thus not inhibiting the function of the atmospheric steam relief system (Reference 2).

SAFETY EVALUATION TWO - The safety-related portions of the MSSS are designed to remain functional after a SSE. Sections 3.7(B).2 and 3.9(B) provide the design loading conditions that were considered. Sections 3.5 and 3.6 provide the hazards analyses to assure that a safe shutdown, as outlined in Section 7.4, can be achieved and maintained.

SAFETY EVALUATION THREE - As indicated by Table 10.3-3, no single failure will compromise the system's safety functions. All vital power can be supplied from either onsite or offsite power systems, as described in Chapter 8.0.

SAFETY EVALUATION FOUR - The MSSS is initially tested with the program given in Chapter 14.0. Periodic inservice functional testing is done in accordance with Section 10.3.4.

Section 6.6 provides the ASME Boiler and Pressure Vessel Code, Section XI requirements that are appropriate for the MSSS.

SAFETY EVALUATION FIVE - Section 3.2 delineates the quality group classification and seismic category applicable to the safety-related portion of this system and supporting systems. Table 10.3-2 shows that the components meet the design and fabrication codes given in Section 3.2. All the power supplies and controls necessary for safety-related functions of the MSSS are Class IE, as described in Chapters 7.0 and 8.0.

SAFETY EVALUATION SIX - Redundant power supplies and power trains operate the MSIVs to isolate safety and nonsafety-related portions of the system. Branch lines upstream of the MSIV contain normally closed, atmospheric relief valves which modulate open and closed on steam line pressure. The atmospheric relief valves fail closed on loss of air, and the safety valves provide the overpressure protection.

Accidental releases of radioactivity from the MSSS are minimized by the negligible amount of radioactivity in the system under normal operating conditions. Additionally, the main steam isolation system provides controls for reducing accidental releases, as discussed in Chapter 15.0, following a steam generator tube rupture.

Detection of radioactive leakage into and out of the system is facilitated by area radiation monitoring (discussed in Section 12.3.4), process radiation monitoring (discussed in Section 11.5), and steam generator blowdown sampling (discussed in Section 10.4.8).

SAFETY EVALUATION SEVEN - Each main steam line is provided with safety valves that limit the pressure in the line to preclude overpressurization and remove stored energy. Each line is provided with an atmospheric relief valve to permit reduction of the main steam line pressure and remove stored energy to achieve an orderly shutdown. The auxiliary feedwater system, which is described and evaluated in Section 10.4.9, provides makeup to the steam generators consistent with the steaming rate.

SAFETY EVALUATION EIGHT - The steam line to the auxiliary feedwater pump turbine is connected to a cross-connecting header upstream of the MSIV. This arrangement ensures a supply of steam to this turbine when the steam generators are isolated. Redundant

check valves are provided in each supply line from the main steam lines to preclude any potential backflow during a postulated main steam line break. The auxiliary feedwater system is described in Section 10.4.9.

10.3.4 INSPECTION AND TESTING REQUIREMENTS

10.3.4.1 Preservice Valve Testing

The set pressures of the safety valves are individually checked during initial startup either by bench testing or with a pneumatic test device. A pneumatic test device is attached to the valve stem. The pneumatic pressure is applied until the valve seat just lifts, as indicated by the steam noise. Combination of the steam pressure and pneumatic pressure with calibration data furnished by the valve manufacturer verifies the set pressure.

The lift-point of each ARV is verified by channel check and channel calibration.

The MSIVs were checked for closing time prior to initial startup.

10.3.4.2 Preservice System Testing

Preoperational testing is described in Chapter 14.0.

The MSSS is designed to include the capability for testing through the full operational sequence that brings the system into operation for reactor shutdown and for MSLB accidents, including operation of applicable portions of the protection system and the transfer between normal and standby power sources.

The safety-related components of the system, i.e. valves and piping, are designed and located to permit preservice and inservice inspections to the extent practicable.

10.3.4.3 Inservice Testing

The performance and structural and leaktight integrity of all system components are demonstrated by continuous operation.

The redundant actuator power trains of each MSIV are subjected to the following tests:

a. Closure time - The valves are checked for closure time at each refueling.

Additional discussion of inservice inspection of ASME Code Class 2 and 3 components is contained in Section 6.6.

10.3.5 SECONDARY WATER CHEMISTRY (PWR)

10.3.5.1 Chemistry Control Basis

Steam generator secondary side water chemistry control is accomplished by:

a. A close control of the feedwater chemistry to limit the amount of impurities that can be introduced into the steam generator

b. The capability of a continuous blowdown of the steam generators to reduce concentrating effects of the steam generator

c. Chemical addition to establish and maintain an environment that minimizes system corrosion

d. By post-construction cleaning of the feedwater system

e. Minimizing feedwater oxygen content prior to entry into the steam generator by deaeration in the hotwell

f. The capability of continuous demineralization and filtration of the condensate system through full-flow, deep bed condensate demineralizers.

Secondary water chemistry is based on the all volatile treatment (AVT) method. This method employs the use of volatile additives to maintain system pH and to scavenge dissolved oxygen present in the feedwater. A pH control chemical such as ammonia and/or an or an organic amine is added to establish and maintain alkaline conditions in the feedtrain. Although the pH control chemical is volatile and will not concentrate in the steam generator, it will reach an equilibrium level which will establish an alkaline condition in the steam generator.

An oxygen control chemical is added to scavenge dissolved oxygen present in the feedwater. The oxygen control chemical also tends to promote the formation of a protective oxide layer on metal surfaces by keeping these layers in a reduced chemical state.

Both the pH control chemical and the oxygen control chemical can be injected continuously at the discharge headers of the condensate pumps and are added, as necessary, for chemistry control.

Operating chemistry guidelines for secondary steam generator water have been developed using EPRI guidelines and Westinghouse chemistry recommendations with actual implementation and control being defined and maintained in plant chemistry procedures. Water chemistry monitoring is discussed in Section 9.3.2. The requirements of BTP MTEB 5-3 are met.

The condensate demineralizer system is discussed in Section 10.4.6.

10.3.5.2 Corrosion Control Effectiveness

Alkaline conditions in the feedtrain and the steam generator reduce general corrosion at elevated temperatures and tend to decrease the release of soluble corrosion products from metal surfaces. These conditions promote formation of a protective metal oxide film and thus reduce the corrosion products released into the steam generator.

An oxygen control chemical also promotes formation of a metal oxide film by the reduction of ferric oxide to magnetite. Ferric oxide may be loosened from the metal surfaces and be transported by the feedwater. Magnetite, however, provides an adhesive, protective layer on carbon steel surfaces. An oxygen control chemical also promotes formation of protective metal oxide layers on copper surfaces. Removal of oxygen from the secondary waters is also essential in reducing corrosion. Oxygen dissolved in water causes general corrosion that can result in pitting of ferrous metals, particularly carbon steel. Oxygen is removed from the steam cycle condensate in the main condenser deaerating section. Additional oxygen protection is obtained by chemical injection of an oxygen control chemical into the condensate stream. Maintaining a residual level of oxygen control chemical in the feedwater ensures that any dissolved oxygen not removed by the main condenser is scavenged before it can enter the steam generator.

The presence of free hydroxide (OH) can cause rapid corrosion (caustic stress corrosion) if it is allowed to concentrate in a local area. Free hydroxide is avoided by maintaining proper pH control and by minimizing impurity ingress into the steam generator.

AVT control is a technique whereby both soluble and insoluble solids are kept at a minimum within the steam generator. This is accomplished by maintaining strict surveillance over the possible sources of feedtrain contamination (e.g., main condenser cooling

water leakage, air inleakage, and subsequent corrosion product generation in the low pressure drain system, etc.). Solids are also excluded, as discussed above, by injecting only volatile chemicals to establish conditions that reduce corrosion and, therefore, reduce transport of corrosion products into the steam generator.

In addition to minimizing the sources of contaminants entering the steam generator, condensate demineralizers are used when required, and a continuous blowdown from the steam generators is employed to limit the concentration of contaminants. With the low solids level that results from employing the above procedures, the accumulation of scale and deposits on steam generator heat transfer surfaces and internals is limited. Scale and deposit formations can alter the thermal hydraulic performance in local regions which creates a mechanism that allows impurities to concentrate and thus possibly cause corrosion. The effect of this type of corrosion is reduced by limiting the ingress of solids into the steam generator and limiting their buildup.

The chemical additives, because they are volatile, do not concentrate in the steam generator and do not represent chemical impurities that can themselves cause corrosion.

10.3.6 STEAM AND FEEDWATER SYSTEM MATERIALS

10.3.6.1 Fracture Toughness

Compliance with fracture toughness requirements of ASME III, Article NC-2300 is discussed in Section 6.1.

10.3.6.2 Material Selection and Fabrication

All pipe, flanges, fittings, valves, and other piping material conform to the referenced ASME, ASTM, ANSI, or MSS-SP code.

The following code requirements apply:

	Stainless Steel	Carbon Steel
Pipe	ANSI B36.19	ANSI B36.10
Fittings	ANSI B16.9, B16.11 or B16.28	ANSI B16.9, B16.11 or B16.28
Flanges	ANSI B16.5	ANSI B16.5

The following ASME Material Specifications apply specifically:

ASME SA-155 GR KCF 70 Class 1 (impact tested)

ASME SA-155 GR KCF 70 Class 1

ASME SA-106, GR C (impact tested)

ASME SA-106, GR, B

ASME SA-106, GR, B (normalized)

ASME SA-234 GR WPB

ASME SA-234 GR WPBW (Mfd from gr 70 plate)

ASME SA-234 GR WPC

ASME SA-105

ASME SA-193 GR B7

ASME SA-194 GR 2H/Grade 7

ASME SA-194 GR 7

ASME SA-216 GR WCB

ASME SA-333 GR 6 (impact tested)

ASME SA-420 GR WPL6 (impact tested)

ASME SA-508 Class 1 (impact tested)

ASME SA-312, TP 304

ASME SA-403, WP-304

ASME SA-403, WP-304 W

ASME SA-182, F-304

ASME SA 672 GR C70

ASME SA 350 GR LF2 (impact tested)

Compliance with the following Regulatory Guides is discussed in Section 6.1:

Regulatory Guide 1.31 - Control of Stainless Steel Welding

Regulatory Guide 1.36 - Nonmetallic Thermal Insulation for Austenitic Stainless Steel

Regulatory Guide 1.37 - Quality Assurance Requirement for Cleaning of Fluid Systems and Associated Components of Water-cooled Nuclear Power Plants

Regulatory Guide 1.44 - Control of the Use of Sensitized Stainless Steel

Regulatory Guide 1.50 - Control of Preheat Temperatures for Welding of Low-Alloy Steels

Regulatory Guide 1.71 - Welder Qualification for Areas of Limited Accessibility

10.3.7 REFERENCES

1. Calculation AB-C-003, Revision 0
2. Calculation AB-C-004, Revision 0

TABLE 10.3-1

MAIN STEAM SUPPLY SYSTEM
CONTROL, INDICATING AND ALARM DEVICES

Device	Control Room	Local	Control Room Alarm
Flow rate indication (2)	Yes	-	Yes (4)
Pressure indication (1)(3)	Yes (5)	-	-
Pressure Control	Yes	-	-

(1) For each generator, three devices are involved in 2-out-of-3 logic to generate input to reactor trip, SLIS, and SIS

(2) Two per steamline

(3) Total of four per steamline

(4) Steam flow - feed flow mismatch

(5) One per steamline (atmospheric relief valves)

TABLE 10.3-2

MAIN STEAM SUPPLY SYSTEM DESIGN DATA

Main Steam Piping (Safety-Related Portion)

Design VWO flowrate at 1,000 psia and 0.25 percent moisture, lb/hr	15,850,801
Power Rerate flowrate at 970 psia and 0.25 percent moisture, lb/hr	15,906,000
Reduced Thermal Design flowrate at 943 psia and 0.25 percent moisture, lb/hr	15,910,000
Number of lines	4
O.D., in.	28
Minimum wall thickness, in.	1.5
Design pressure, psia	1,200
Design temperature, F	600
Design code	ASME Section III, Class 2
Seismic design	Category I

Main Steam Isolation Valves

Number per main steam line	1
Closing time, seconds	1.5 to 5 (at normal operating conditions prior to receiving isolation signal)
Design code	ASME Section III, Class 2
Seismic design	Category I

Atmospheric Relief Valves

Number per main steam line	1
Normal set pressure, psig	1,125
Capacity (each) at 1,107 psia, lb/hr	594,642
Capacity (each) at 100 psia, lb/hr	54,000
Design code	ASME Section III, Class 2
Seismic design	Category I

Main Steam Safety Valves

Number per main steam line	5
Orifice area, sq in.	16
Size, in.	6 x 8 x 8
Design code	ASME Section III, Class 2
Seismic design	Category I

Number	Set Pressure (psig)	Capacity at 3-Percent Accumulation (lb/hr)
1	1185	893,160
2	1197	902,096
3	1210	911,779
4	1222	920,715
5	1234	929,652

TABLE 10.3-2 (SHEET 2)

MAIN STEAM SUPPLY SYSTEM DESIGN DATA

The Following information provides the "FLOWRATE PER STEAMLINE" and the "TOTAL SYSTEM FLOWRATE" using regression limits and spring constants (K-RATEs) varying from 25000 to 27770 lbf/in, for the Main Steam Safety Valves (MSSVs).

K-RATE LBF/IN	REGRESSION LIMIT	FLOWRATE PER STEAMLINE LMB/HR	TOTAL SYSTEM FLOWRATE LMB/HR
25000	Lower Limit	4913613	19654452
25000	Regression Line	5131912	20527648
25000	Upper Limit	5149865	20599460
27770	Lower Limit	4212594	16850376
27770	Regression Line	4695591	18782364
27770	Upper Limit	5045732	20182928

TABLE 10.3-3

MAIN STEAM SYSTEM
SINGLE ACTIVE FAILURE ANALYSIS

	Component	Failure	Comments
1.	Main steam line isolation and bypass valves.	Loss of power from one power supply	Redundant power supply provided.
		Valve fails to close upon receipt of automatic signal (SLIS)	Closure of three out of four isolation valves adequate to meet requirements.
2.	Atmospheric relief valves	Loss of power or air to valve fails to modulate upon high pressure	Safety valves provide overpressure protection for the associate line. Atmospheric relief valves on two out of four lines adequate to meet shutdown requirements.
3.	Pressure transmitters	No signal generated for protection logic	For each generator 2-out-of-3 logic reverts to 1-out-of-2 logic, and protection logic is generated by other devices. Refer to Chapter 7.0.

TABLE 10.3-3 (Sheet 2)

	Component	Failure	Comments
4.	Main steam line drain line isolation valve	Valve fails to close upon receipt of automatic signal (SLIS)	Negligible steam lost from generator. In addition, three of four intact secondary loops are required to meet safety requirements.
5.	Steam supply valve to auxiliary feedpump turbine	Valve fails to open upon receipt of automatic signal (AFAS)	Redundant valve provides 100 percent of flow requirements to the auxiliary feed pump turbine.
		Supplied from broken secondary loop and train of power for redundant supply valve lost	Redundant motor-driven auxiliary feedwater pump meets 100 percent of auxiliary feedwater requirements.

10.4 OTHER FEATURES OF STEAM AND POWER CONVERSION SYSTEM

This section provides discussions of each of the principal design features of the steam and power conversion system.

10.4.1 MAIN CONDENSERS

The main condenser is the steam cycle heat sink. During normal operation, it receives and condenses main turbine exhaust steam, steam generator feedwater pump turbine exhaust steam, and turbine bypass steam. The main condenser is also a collection point for other steam cycle miscellaneous flows, drains, and vents.

The main condenser is utilized as a heat sink for reactor cooldown during a normal plant shutdown.

10.4.1.1 Design Bases

10.4.1.1.1 Safety Design Bases

The main condenser serves no safety function and has no safety design basis.

10.4.1.1.2 Power Generation Design Bases

POWER GENERATION DESIGN BASIS ONE - The main condenser is designed to function as the steam cycle heat sink and miscellaneous flow collection point.

POWER GENERATION DESIGN BASIS TWO - The main condenser accommodates up to 40 percent of the VWO main steam flow which is bypassed directly to the condenser by the turbine bypass system.

POWER GENERATION DESIGN BASIS THREE - The main condenser provides for the removal of noncondensable gases from the condensing steam through the main condenser air removal system, as described in Section 10.4.2.

POWER GENERATION DESIGN BASIS FOUR - The main condenser provides the surge volume required for the condensate and feedwater system.

POWER GENERATION DESIGN BASIS FIVE - The main condenser provides for deaeration of the condensate, such that condensate oxygen content should not exceed 7 ppb under normal full power operating condition.

10 4.1.2 System Description

10.4.1.2.1 General Description

The main condenser is a multipressure, three-shell, deaerating unit. Each shell is located beneath its respective low-pressure turbine. The tubes in each shell are oriented transverse to the turbine-generator longitudinal axis.

The three condenser shells are designated as the low-pressure shell, the intermediate-pressure shell, and the high-pressure shell. Each shell has six tube bundles. Circulating water flows in series through the three single-pass shells, as shown in Figure 10.4-1.

Exhaust steam from the steam generator feedwater pump turbine is used to reheat the condensate in the condenser. Each hotwell is divided longitudinally by a vertical partition plate. The condensate pumps take suction from these hotwells, as shown in Figure 10.4-2.

The condenser shells are located in pits below the turbine building operating floor and are supported above the turbine building foundation. Failure of or leakage from a condenser shell will only result in a minimum water level in the condenser pit. Expansion joints are provided between each turbine exhaust opening and the steam inlet connections of the condenser shell. Water seals are provided around the entire outside periphery of these expansion joints, but are only placed in service (filled with water) during post maintenance testing following new joint installation and in times when it is expected that an expansion joints vacuum seal has been breached. When water seals are filled with water, level indication provides detection of leakage through the expansion joint. The hotwells of the three shells are interconnected by steam-equalizing lines. Four low-pressure feedwater heaters are located in the steam dome of each shell. Piping is installed for hotwell level control and condensate sampling.

10.4.1.2.2 Component Description

Table 10.4-1 provides the design data for each condenser shell for both the closed loop and open loop circulating water systems.

10.4.1.2.3 System Operation

During normal operation, exhaust steam from the low-pressure turbines is directed into the main condenser shells. The condenser also receives auxiliary system flows, such as feedwater heater vents and drains and feedwater pump turbine exhaust.

Hotwell level controls provide automatic makeup or rejection of condensate to maintain a normal level in the condenser hotwells. On low water level in a hotwell, the makeup control valves open and admit condensate to the hotwell from the condensate storage tank. When the hotwell is brought to within normal-operating range, the valves close. On high water level in the hotwell, the condensate reject control valve opens to divert condensate from the condensate pump discharge (downstream of the demineralizers) to the condensate storage tank; rejection is stopped when the hotwell level falls to within normal operating range.

Sparger piping is provided for distribution of turbine bypass discharge and other high temperature drains. Orifices are provided internal to the spargers where necessary for pressure reduction prior to distribution within the condenser. Where sparger piping cannot be utilized due to space limitations, baffles are provided to direct the discharge away from the tubes and other condenser components. Pressure reducing orifices are provided in the drains piping outside the condenser, where required.

The main condenser, with the assistance of auxiliary steam at low loads, deaerates the condensate so that dissolved oxygen should not exceed 7 ppb over the entire load range. Both the air inleakage and the noncondensable gases contained in the turbine exhaust are collected in the condenser and removed by the condenser air removal system.

During the cooling period after plant shutdown, the main condenser removes residual heat from the reactor coolant system via the turbine bypass system. The main condenser receives up to 40 percent of VWO main steam flow through the turbine bypass valves. If the condenser is not available to receive steam via the turbine bypass system, the reactor coolant system can be safely cooled down by discharging steam through the atmospheric relief valves or the main steam safety valves, as described in Section 10.3.

Circulating water leakage occurring within the condenser is detected by monitoring the condensate leaving each hotwell (six monitoring points altogether). This information permits determination of which tube bundle has sustained the leakage. Steps may then be taken to isolate and dewater that bundle and its water boxes and, subsequently, repair or plug the leaking tubes. Section 10.4.6 describes the contaminants allowed in the condensate and the length of time the condenser may operate with degraded conditions without affecting the condensate/feedwater quality for safe operation.

During normal operation and shutdown, the main condenser has a negligible inventory of radioactive contaminants. Radioactive

contaminants may enter through a steam generator tube leak. A discussion of the radiological aspects of primary-to-secondary leakage, including anticipated operating concentrations of radioactive contaminants, is included in Chapter 11.0. No hydrogen buildup in the main condenser is anticipated.

The failure of the main condenser and the resulting flooding will not preclude operation of any essential system because the limited safety related components, instruments and cabling associated with the main steam dumps and turbine trip/reactor trip signals are located well above the expected flood level in the turbine building, and the water cannot reach the equipment located in the auxiliary building. Refer to Section 10.4.5.

10.4.1.3 Safety Evaluation

The main condenser serves no safety-related function.

10.4.1.4 Tests and Inspections

The condenser shells are hydrostatically tested after erection.

The condenser waterboxes, tubesheets, and tubes are hydrostatically tested as a unit.

The extent of inservice inspection of the main condenser includes the following:

1. Monitor condensate conductivity, temperature, and dissolved oxygen level.

2. When an expansion joint water seal is in service in times when it is expected that the vacuum seal has been breached, check water level in the condenser/turbine connection expansion joint water seal for seal leak detection.

The frequency of these inspections will depend on past condenser operating experience and the type of problems identified in the previously described inspections.

10.4.1.5 Instrument Applications

The main condenser hotwells are equipped with level control devices for automatic control of condensate makeup and rejection. Local and remote indicating devices are provided for monitoring the water level in the condenser shells. High, low, and low-low hotwell water level alarms are provided in the control room.

A sensor is provided to monitor condenser back-pressure. A high back-pressure alarm is activated at approximately 5 inches Hg absolute (Hga), and turbine trip is activated at 7.5 inches Hga.

Conductivity and sodium content of the condensate from each condenser shell is monitored to provide an indication of condenser tube leakage.

Turbine exhaust hood temperature is monitored and controlled with water sprays supplied from the condensate pump discharge.

10.4.2 MAIN CONDENSER EVACUATION SYSTEM

Main condenser evacuation is performed by the main condenser air removal system (MCARS). The MCARS removes noncondensable gases and air from the main condenser during plant startup, cooldown, and normal operation.

10.4.2.1 Design Bases

10.4.2.1.1 Safety Design Bases

The MCARS serves no safety function and has no safety design bases.

10.4.2.1.2 Power Generation Design Bases

POWER GENERATION DESIGN BASIS ONE - The MCARS is designed to remove air and noncondensable gases from the condenser during plant startup, cooldown, and normal operation.

POWER GENERATION DESIGN BASIS TWO - The MCARS establishes and maintains a vacuum in the condenser during startup and normal operation by the use of mechanical vacuum pumps.

10.4.2.2 System Description

10.4.2.2.1 General Description

The MCARS, as shown in Figure 10.4-3, consists of three mechanical vacuum pumps which remove air and noncondensable gases from the main condenser during normal operation and provide condenser hogging during startup.

The seal water cooler uses service water so that the seal water is kept cooler than the saturation temperature of the condenser at its operating pressure. As described in Section 9.4.4, air inleakage and noncondensable gases that are removed from the condenser and discharged from the pumps are processed through the charcoal adsorption train and monitored for radioactivity prior to discharge to the unit vent.

The noncondensable gases and vapor mixture discharged to the atmosphere from the system is not normally radioactive. However, it is possible for the mixture discharged to become contaminated in the event of primary-to-secondary system leakage.

A discussion of the radiological aspects of primary-to-secondary leakage, including anticipated release from the system, is included in Chapter 11.0.

As long as the MCARS is functional, its operation does not affect the reactor coolant system. Should the air removal system fail completely, a gradual reduction in condenser vacuum would result from the buildup of noncondensable gases. This reduction in vacuum would cause a lowering of turbine cycle efficiency which requires an increase in reactor power to maintain the demanded electrical power generation level. The reactor power is limited by the reactor control system, as described in Section 7.7. The reactor protection system, described in Section 7.2, independently guarantees that the reactor is maintained within safe operation limits.

If the MCARS remains inoperable, condenser vacuum decreases to the turbine trip setpoint and a turbine trip is initiated. A loss of condenser vacuum incident is discussed in Section 15.2.5.

10.4.2.2.2 Component Description

MECHANICAL VACUUM PUMPS - The mechanical vacuum pumps are 150 hp motor-driven pumps which operate at 435 rpm.

SEAL WATER COOLERS - The seal water coolers are shell and tube heat exchangers. Mechanical vacuum pump seal water flows through the shell side of the coolers, and service water flows through the tubes.

Piping and valves are carbon steel. All piping is designed to ANSI B31.1. The design parameters of the system are provided in Table 10.4-2.

10.4.2.2.3 System Operation

During normal plant operation, noncondensable gases are removed from the condenser, and the condenser vacuum is automatically maintained by the condenser vacuum pumps. The vacuum pumps are run as needed to ensure adequate capacity to remove noncondensable gases. Non-running pumps are normally in standby and automatically start on low vacuum.

During startup operation, air is rapidly removed from the condenser by three condenser mechanical vacuum pumps.

During normal operation, the condenser vacuum pump suction header can be lined up as an alternate vacuum source for the Demineralized Water Storage and Transfer System (DWSTS) degasifier tank.

10.4.2.3 Safety Evaluation

The main condenser evacuation system has no safety-related function.

10.4.2.4 Tests and Inspections

Testing and inspection of the system is performed prior to plant operation.

Components of the system are continuously monitored during operation to ensure satisfactory operation. Periodic inservice tests and inspections of the evacuation system are performed in conjunction with the scheduled maintenance outages.

10.4.2.5 Instrumentation Applications

Local indicating devices such as pressure, temperature, and flow indicators are provided as required for monitoring the system operation. Pressure switches are provided for automatic operation of the standby mechanical vacuum pump during normal operation.

Volumetric flow indication is provided locally to monitor the quantity of exhausted noncondensable gases.

A radiation detector is provided in the turbine building HVAC system to monitor the discharge of the condenser mechanical vacuum pumps. The radiation detector is indicated and alarmed in the control room.

10.4.3 TURBINE GLAND SEALING SYSTEM

The turbine gland sealing system (TGSS) prevents the escape of steam from the turbine shaft/casing penetrations and valve stems and prevents air inleakage to subatmospheric turbine glands.

10.4.3.1 Design Bases

10.4.3.1.1 Safety Design Basis

The TGSS serves no safety function and has no safety design basis.

10.4.3.1.2 Power Generation Design Bases

POWER GENERATION DESIGN BASIS ONE - The TGSS is designed to prevent atmospheric air leakage into the turbine casings and to minimize steam leakage out of the casings of the turbine-generator and steam generator feedwater pump turbines.

POWER GENERATION DESIGN BASIS TWO - The TGSS returns the condensed steam to the condenser and exhausts the noncondensable gases to the atmosphere.

POWER GENERATION DESIGN BASIS THREE - The TGSS has a capacity to handle steam and air flows resulting from twice the normal packing clearances.

10.4.3.2 System Description

10.4.3.2.1 General Description

The TGSS is shown in Figure 10.4-4. It consists of steam seal inlet and exhaust headers, feed and unloading valves, steam packing exhauster, blowers, and associated piping and valves.

10.4.3.2.2 System Operation

The annular space through which the turbine shaft penetrates the casing is sealed by steam supplied to shaft packings. Where the packing seals against positive pressure, the sealing steam connection acts as a leakoff. Where the packing seals against vacuum, the sealing steam either is drawn into the casing or leaks outward to a vent annulus that is maintained at a slight vacuum. The vent annulus also receives air leakage from the outside. The air-steam mixture is drawn to the steam packing exhauster.

Sealing steam is distributed to the turbine shaft seals through the steam-seal header. Steam flow to the header is controlled by the steam-seal feed valve which responds to maintain steam-seal header pressure. In case of low steam-seal header pressure, a pressure regulator signal opens the feed valves to admit steam from the main steam piping upstream of the turbine stop valves, from the auxiliary steam headers, or from ninth stage turbine extraction. In case of high pressure, the steam packing unloading valve automatically opens to bypass excess steam directly to the main condenser.

During the startup phase of turbine-generator operation or at low turbine loads, steam is supplied to the turbine gland sealing system from the main steam piping or auxiliary steam header. During low-load operation, turbine-generator sealing steam is supplied from the main steam system through the steam-seal feed valve to maintain the necessary steam flow to the steam-seal header. As the turbine-generator load is increased, steam leakage from the control valve packings and turbine high-pressure packings increases, and enters the steam-seal header. When this leakage is sufficient to maintain steam-seal header pressure, sealing steam

to all turbine seals, including the low-pressure turbine casings and the main feedwater pump turbine, is supplied entirely from these high-pressure packings. At full load, more steam leaks from the high-pressure packings than is required by vacuum packings, and excess steam is discharged directly to the main condenser. Steam leak-off from the turbine stop valves feeds into the high-pressure turbine exhaust.

The outer ends of all glands are provided with collection piping which routes the mixture of air and excess seal steam to the steam packing exhauster. The steam packing exhauster is a shell and tube heat exchanger; the steam-air mixture passes into the shell side, and service water flows through the tube side. The steam packing exhauster is maintained at a slight vacuum by a motor-operated blower, which discharges to the atmosphere. There are two blowers mounted in parallel which provide 100-percent redundancy. Condensate from the steam-air mixture drains to the main condensers, while noncondensables are exhausted to the atmosphere.

The mixture of noncondensable gases discharged to the atmosphere by the steam packing exhauster blower is not normally radioactive; however, in the event of significant primary-to-secondary system leakage due to a steam generator tube leak, it is possible for the mixture discharged to be radioactively contaminated. Primary-to-secondary system leakage is detected by the radiation monitors in either the main steam sample system or the condenser air removal system. A full discussion of the radiological aspects of primary-to-secondary system leakage is included in Chapter 11.0.

In the absence of primary-to-secondary leakage, failure of the turbine gland seal system will result in no leakage of radioactivity to the atmosphere. A failure of this system would, however, result in a loss of condenser vacuum.

10.4.3.3 Safety Evaluation

The TGSS has no safety-related function.

10.4.3.4 Tests and Inspections

The system was tested, in accordance with written procedures, during the initial testing and operation program. Since the TGSS is in constant use during normal plant operation, the satisfactory operation of the system components is evident.

10.4.3.5 Instrumentation Applications

A pressure controller is provided to maintain steam-seal header pressure by providing signals to the steam-seal feed valve.

Local and remote indicators, as well as alarm devices, are provided for monitoring the operation of the system.

10.4.4 TURBINE BYPASS SYSTEM

The turbine bypass system (TBS) has the capability to bypass main steam from the steam generators to the main condenser in a controlled manner to minimize transient effects on the reactor coolant system of startup, hot shutdown and cooldown, step load reductions in generator load, and cycling the main turbine stop and control valves. The TBS is also called the steam dump system.

10.4.4.1 Design Bases

10.4.4.1.1 Safety Design Bases

The TBS serves no safety function and has no safety design basis.

10.4.4.1.2 Power Generation Design Bases

POWER GENERATION DESIGN BASIS ONE - The TBS has the capacity to bypass 40 percent of the VWO main steam flow to the main condenser.

POWER GENERATION DESIGN BASIS TWO - The TBS is designed to bypass steam to the main condenser during plant startup and to permit a normal manual cooldown of the reactor coolant system from a hot shutdown condition to a point consistent with the initiation of residual heat removal system operation.

POWER GENERATION DESIGN BASIS THREE - The TBS will permit a 50-percent electrical step-load reduction without reactor trip. The system will also allow a turbine and reactor trip from full power without lifting the main steam safety valves.

10.4.4.2 System Description

10.4.4.2.1 General Description

The TBS is shown on Figure 10.3-1, Main Steam System. The system consists of a manifold connected to the main steam lines upstream

of the turbine stop valves and lines from the manifold with regulating valves to each condenser shell. The system is designed to bypass 40 percent of the VWO main steam flow directly to the condenser.

The capacity of the system, combined with the capacity of the RCS to accept a 10-percent step-load change, provides the capability to shed 50 percent of the turbine-generator rated load without reactor trip and without the operation of relief and safety valves. A load rejection in excess of 50 percent is expected to result in reactor trip and operation of the main steam atmospheric relief valves. The operation of the main steam, atmospheric, relief valves and spring-loaded safety valves prevents overpressurization of the main steam system.

There are 12 turbine bypass valves. Seven valves discharge into the low pressure condenser, four valves discharge into the intermediate condenser, and a single valve discharges into the high pressure condenser. The system is arranged in this manner to allow for the differences in the heat sink capacities of the three condenser shells. The heat sink capacity of any one condenser shell is limited by the administrative limit of 5.5 inches Hga (for 100% power operation) condenser pressure imposed on turbine operation by the turbine-generator manufacturer. The low pressure condenser is the largest heat sink, since it normally operates at the lowest pressure.

The steam bypassed to the main condenser is not normally radioactive. In the event of primary-to-secondary leakage, it is possible for the bypassed steam to become radioactively contaminated. A full discussion of the radiological aspects of primary-to-secondary leakage is contained in Chapter 11.0.

10.4.4.2.2 Component Description

The TBS contains 12 air-actuated carbon steel, 8 inch, 1,500 pound globe valves. The valves are pilot-operated, spring-opposed, and fail closed upon loss of air or loss of power to the control system. Sparger piping distributes the steam within the condenser. Isolation valves permit maintenance of the bypass valve while the plant is in operation.

10.4.4.2.3 System Operation

The TBS, during normal operating transients for which the plant is designed, is automatically regulated by the reactor coolant temperature control system to maintain the programmed coolant temperature. The programmed coolant temperature is derived from the high pressure turbine first stage pressure, which is a load

reference signal. The difference between programmed reactor coolant average temperature and measured reactor coolant average temperature is used to activate the steam dump system under automatic control. The system operates in two fundamental modes. In one mode, two groups of six valves each trip open sequentially in approximately 3 seconds. This operational mode is activated during a large reactor-to-turbine power mismatch. In the second mode, four groups of three valves each modulate open sequentially in approximately 10 seconds. A logic diagram is shown in Figure 7.2-1 (Sheet 10).

When the plant is at no load (and there is no turbine load reference), while cycling the main turbine stop and control valves, and during plant cooldown the system is operated in a pressure control mode. The measured main steam system pressure is compared against the pressure set by the operator in the control room. The valves to any one condenser shell are prevented from opening when the pressure in that shell reaches 5.0 in Hga.

The turbine bypass control system can malfunction in either the open or closed mode. The effects of both these potential failure modes on the NSSS and turbine system are addressed in Chapter 15.0. If the bypass valves fail open, additional heat load is placed on the condenser. If this load is great enough, the turbine is tripped on high-high condenser pressure. Ultimate overpressure protection for the condenser is provided by rupture discs. If the bypass valves fail closed, the atmospheric relief valves permit controlled cooldown of the reactor.

10.4.4.3 Safety Evaluation

The TBS serves no safety function and has no safety design basis. There is no safety-related equipment in the vicinity of the TBS. All high energy lines of the TBS are located in the turbine building.

10.4.4.4 Inspection and Testing Requirements

Before the system is placed in service, all turbine bypass valves are tested for operability. The steam lines are hydrostatically tested to confirm leaktightness. The bypass valves may be tested while the unit is in operation. System piping and valves are accessible for inspection.

The turbine bypass system includes the capability to inservice test the turbine bypass valves by closing the downstream manual isolation valves and cycling the turbine bypass valves from the control room. Turbine bypass valves are cycled during normal plant operation at least annually.

10.4.4.5 Instrumentation Applications

The turbine bypass control system is described in Section 7.7. Hand switches in the main control room are provided for selection of the system operating mode. Pressure controllers and valve position lights are also located in the main control room.

10.4.5 CIRCULATING WATER SYSTEM

The circulating water system (CWS) within the standard power block consists of the circulating water piping, on-line condenser tube cleaning system, and water box venting subsystem.

The circulating water for cycle heat rejection from the main condenser is provided by an open circulating water system using a man-made cooling lake.

10.4.5.1 Design Bases

10.4.5.1.1 Safety Design Bases

The CWS serves no safety-related function.

10.4.5.1.2 Power Generation Design Bases

POWER GENERATION DESIGN BASIS ONE - The CWS supplies cooling water at a sufficient flow rate to condense the steam in the condenser, as required by the turbine cycle heat balance.

POWER GENERATION DESIGN BASIS TWO - Two out of three operating circulating water pumps are automatically secured in the event of gross leakage into the condenser pit to prevent flooding of the turbine building.

POWER GENERATION DESIGN BASIS THREE - The cooling lake removes the design heat load from the circulating water during all design weather conditions.

10.4.5.2 System Description

10.4.5.2.1 General Description

The CWS consists of the main condenser, circulating water screenhouse, traveling screens, circulating water pumps, water box venting pumps, water box venting tanks, piping, valves, seal tanks, and instrumentation, as shown in Sheets 1 through 4 of Figure 10.4-1. The physical arrangement of the circulating water screenhouse is shown in Sheets 4 and 5 of Figure 10.4-1. The major components of the CWS are shown in Table 10.4-3.

The CWS provides cooling water for the removal of heat from the main condensers and rejects heat to a heat sink. The water box venting subsystem helps to fill the condenser water boxes during startup and removes accumulated air and other gases from the water boxes during normal operation.

10.4.5.2.2 Component Description

Codes and standards applicable to the CWS are listed in Table 3.2-1. The system is designed and constructed in accordance with quality group D specifications. Table 10.4-3 provides the design parameters for major components in the circulating water system.

Three one-third capacity motor-driven, vertical, wet-pit circulating water pumps pump the circulating water from the cooling lake to the main condenser. They are designed to operate through the expected range of cooling lake levels. The heated water discharged from the condenser is returned to the cooling lake through a CWS discharge structure. The main circulating water pipes from the circulating water screenhouse to the power block and from the power block to the discharge structure have an inside diameter of 144 inches.

Expected circulating water inlet temperature range is 32 to 95 degrees F. The temperature rise across the condenser is about 32.5 degrees F at full power, three circulating water pump operation.

Freeze protection to prevent ice blockage at the circulating water screenhouse is accomplished by a warming line that routes a portion of the circulating water condenser discharge to the inlet of the screenhouse pump bays.

Provisions for intermittent biocide addition to reduce the buildup of slime and biological growth in the CWS are provided.

Anti-scale chemical feed equipment is provided to inject scale inhibitor/dispersant into the CWS to inhibit mineral scale and disperse suspended solids.

Each circulating water pump is equipped with a discharge butterfly valve that permits a pump to be isolated while operating the system with the remaining pumps.

The condenser has a permanent tube cleaning system installed to improve plant efficiency. Sponge balls are circulated from the condenser outlet stand pipes to the condenser inlet stand pipes by a ball pump. A strainer screen located in the outlet stand pipes is used to catch the sponge balls and allow the ball pumps to circulate them back through the condenser tubes.

The CWS by design prevents any release of radioactive material from the steam system into the circulating water. The circulating water passing through the condenser is maintained at a higher pressure than the shell or condensing side. Therefore, any leakage (such as from a condenser tube) is from the circulating water into the shell side of the condenser.

10.4.5.2.3 System Operation

The CWS operates continuously during power generation, including startup and shutdown. The isolation valves in the standard power block are controlled by locally mounted hand switches. There are motor operated butterfly valves on the discharge of each of the circulating water pumps that are controlled by local and main control board handswitches and the pump starting and stopping sequence.

In addition, level switches are included in the condenser pit to stop 2 of 3 circulating water pumps and close their pump discharge valves to 25% open upon a high pit water level indication and thus reduce the water flow rate to the pit. In any case, one circulating water pump will remain in operation and must be manually secured. The level switch is set to stop all but one running circulating water pump at a water level of 5 feet above the bottom of the condenser pit. High water level in the sumps in the condenser pit is alarmed to the control room. The water level trip is set high to prevent inadvertent trips from unrelated failures, such as a sump overflow.

The CWS is filled by starting the service water system. The service water can fill the circulating water only to the tops of the circulating water discharge weirs (approximate El. 2000). The water box venting pumps are manually started to fill the remaining portion of the CWS. During normal operation, the venting pumps operate automatically to remove air and other noncondensable gases.

Approximately one-sixth of the tubes of each of the three condensers can be isolated by closing associated inlet and outlet water box isolation valves.

Draining of any condenser water box that is selected is initiated by closing the condenser isolation valves and opening the drain connection and a vent valve on the water box. When the suction standpipe of the condenser drain pump is filled, the pump is manually started. A low level switch is provided in the standpipe, on the suction side of the drain pump. This switch automatically stops the pump in the event of low water level in the standpipe to protect the pump from cavitation.

10.4.5.3 Safety Evaluation

The CWS is not a safety-related system; however, a flooding analysis of the turbine building was performed on the CWS which

postulated a complete rupture of a single expansion joint. It was assumed that the flow into the condenser pit consists of the water which can drain from both the upstream and downstream side of the break. For conservatism, it was assumed that the condenser circulating water isolation valves do not fully close, sump volumes in the condenser pit were neglected, and the sump pumps were not operable. A complete description of the CWS flooding analysis is provided in Appendix 3B.

10.4.5.4 Tests and Inspections

Preoperational testing is described in Chapter 14.0. The performance and structural and leak tight integrity of all system components are demonstrated by continuous operation.

All active components of the system (except the main condenser and piping) are accessible for inspection during station operation.

Performance, hydrostatic, and leakage tests were conducted on the CWS butterfly valves in accordance with applicable codes as described in Chapter 14.0.

10.4.5.5 Instrumentation Applications

Temperature monitors are provided at the inlet and outlet water boxes of each condenser shell section.

Indication is provided in the control room to identify open and closed positions of motor-operated circulating water pump discharge butterfly valves.

10.4.6 CONDENSATE CLEANUP SYSTEM

The condensate cleanup function is performed by the condensate demineralizer system (CDS). The CDS is designed to maintain the required purity of feedwater for the steam generators by filtration to remove corrosion products and by ion exchange to remove condenser leakage impurities. The secondary side water chemistry requirements are given in Section 10.3.5.

10.4.6.1 Design Bases

10.4.6.1.1 Safety Design Bases

The CDS serves no safety function and has no safety design bases.

10.4.6.1.2 Power Generation Design Bases

POWER GENERATION DESIGN BASIS ONE - The CDS removes dissolved and suspended solids from the condensate prior to startup.

POWER GENERATION DESIGN BASIS TWO - The CDS removes impurities entering the secondary cycle from condenser leaks that would otherwise deposit or increase corrosion rates in the secondary cycle.

POWER GENERATION DESIGN BASIS THREE - The CDS removes corrosion products from the condensate and any drains returned to the condenser hotwell so as to limit any accumulation in the secondary cycle.

POWER GENERATION DESIGN BASIS FOUR - The CDS limits the entry of dissolved solids into the feedwater system in the event of large condenser leaks, such as a tube break, to permit a reasonable amount of time for plant shutdown.

10.4.6.2 System Description

10.4.6.2.1 General Description

The CDS consists of demineralizer vessels, regeneration tanks, pumps, piping, instrumentation, and controls, as shown in Figure 10.4-5. The CDS components are located in the turbine building at El. 2000.

10.4.6.2.2 Component Description

Codes and standards applicable to the CDS are listed in Table 3.2-2. The system is designed and constructed in accordance with quality group D requirements. Design data for major components of the CDS are listed in Table 10.4-4.

CONDENSATE DEMINERALIZER VESSELS - The six 20-percent-capacity spherical vessels with deep-bed regenerable mixed strong acid cation/strong base anion resins, are constructed of carbon steel and lined with natural rubber. The design flowrate is approximately 53 gpm per square foot of bed, and the bed depth is approximately 36 inches.

REGENERATION TANKS - The three resin regeneration tanks are the resin separation and cation regeneration tank, anion regeneration tank, and the resin mixing and storage tank. All tanks are constructed of carbon steel and lined with natural rubber.

MISCELLANEOUS EQUIPMENT - Miscellaneous equipment includes one sulfuric acid feed pump, two caustic soda feed pumps (one standby), two sluice water pumps (one standby), one sulfuric acid day tank, one caustic soda day tank, one resin addition hopper with educator, one caustic dilution hot water tank, one waste collection tank, piping, instrumentation, and controls. In addition, one sulfuric acid and one caustic feed pump, which take suction from their respective day tanks, are included to feed chemicals into the high TDS tanks for neutralization of pH adjustment.

10.4.6.2.3 System Operation

The CDS is operated as necessary to maintain feed-water purity levels. The condensate demineralizers are capable of both hydrogen or ammonia/amine cycle operation in continuous or intermittent service.

The ammonia/amine cycle operation with negligible condenser leakage will allow an extended demineralizer run. Operation with large condenser leakage requires that the demineralizer beds be run in the hydrogen cycle to meet secondary side chemistry requirements. Allowable condenser inleakage is limited to levels that will not require continuous regeneration of a demineralizer bed more than once every 2 days.

Condensate flow is passed through up to five of the six demineralizer vessels, which are piped in parallel. The service run for each demineralizer vessel terminates by either high differential pressure across the vessel or high cation conductivity or sodium content in the demineralizer effluent water. Alarms for each of these monitoring points are provided on the local control panel.

The local control panel is equipped with the appropriate instruments and controls to allow the operators to perform the following operations:

a. Remove an exhausted demineralizer from service and replace it with a standby unit

b. Initiate resin transfer from the demineralizer vessel into the cation regeneration tank

c. Initiate resin transfer from the resin mixing and storage tank to the empty demineralizer vessel

d. Initiate a complete resin regeneration process

e. Initiate a resin wash-air scrub process without chemical regeneration

On termination of a service run, the exhausted demineralizer vessel is taken out of service, and a standby unit is put in service by remote manual operation from the local control panel. The resin from the exhausted vessel is transferred to the cation regeneration tank. The anion and cation resins are hydraulically separated. The anion resin is transferred to the anion regeneration tank. Each resin is then backwashed, chemically regenerated, rinsed, and transferred to the resin mixing and storage tank for final rinsing and mixing.

The regeneration process used is a cation/anion separation process which facilitates ammonia cycle operation. The hydraulic process effectively separates and isolates the respective resin components; hence, the technique ensures complete conversion of both resins to the desired regenerated form. This eliminates the possibility of either sodium or sulfate leaching into the condensate stream. During the wash-air scrub process, there is no chemical regeneration involved. This process is used for crud removal when the resin bed has been exhausted by high differential pressure.

A final rinse is performed on the demineralizer before it is placed in service. The rinse is monitored by conductivity analyzers, and the process is terminated when the required conductivity is obtained.

Regenerant chemicals are 66-degrees Baume sulfuric acid and 50-percent liquid caustic soda. Dilution of the sulfuric acid and caustic soda to the required application concentrations and temperatures is accomplished at the time of use in closed low-pressure systems employing in-line mixing tees.

Regenerant wastes are segregated by total dissolved solid (TDS) content and directed to the low or high TDS tanks in the secondary liquid waste

system. Low TDS waste is generated in the initial backwash and during the final stages of resin rinsing following chemical regeneration. The backwash is usually high in particulate content. The high TDS is generated from the chemical regeneration and the initial stages of the rinsing after chemical regeneration. These values vary depending on how the system is operated.

The high and low TDS waste can be processed by either the wastewater treatment facility as shown in Figs. 9.2-24 and 9.2-25, or the secondary liquid waste system as described in Section 10.4.10.

The demineralizer system includes all isolation valves, piping for vessels, post strainers, and equipment necessary for resin transfer. There is also a recirculation line to the condenser for purging aerated water from any vessel being placed in service.

10.4.6.2.4 Radioactivity

Under normal operating conditions, there is insignificant radioactivity present in the steam and power conversion system. It is possible for the cycle to become contaminated through a steam generator tube leak. Based on a postulated primary-to-secondary leak rate, the equilibrium secondary system activities are developed in Chapter 11.0. The condensate demineralizers reduce the radioactivity level in the secondary cycle, as described in Chapter 11.0.

Based on the condensate activity and the bed run times, the radioactivity that concentrates on the demineralizer beds will not reach a significant level. The small quantity of radioactive material introduced to the secondary liquid waste system is discussed in Section 10.4.10.

Radiation levels near the demineralizers can be limited by increasing the frequency of regeneration of the beds to remove the radioactive material from the resin beds. Administrative controls can be implemented to limit personnel access, if required.

10.4.6.3 Safety Evaluation

The CDS serves no safety function.

10.4.6.4 Tests and Inspections

Preoperational testing of the CDS, as described in Chapter 14.0, ensured the proper functioning of the equipment and instrumentation. The system operating parameters are monitored during power operation.

10.4.6.5 Instrumentation Applications

Continuous, on-line instrumentation is provided to monitor equipment performance in service or during the regeneration cycle. Local and control room alarms annunciate trouble in the system. Systematic analysis of local samples is performed to monitor the accuracy of the automatic equipment. Flow and differential pressure are continually monitored, in addition to ionic concentration for both influent and effluent streams.

10.4.7 CONDENSATE AND FEEDWATER SYSTEM

The function of the condensate and feedwater system (CFS) is to receive condensate from the condenser hotwells and deliver feedwater, at required pressure and temperature, to the four steam generators.

10.4.7.1 Design Bases

10.4.7.1.1 Safety Design Bases

The portion of the CFS from the steam generator to the steam generator isolation valves is safety related and is required to function following a DBA and to achieve and maintain the plant in a post accident safe shutdown condition.

SAFETY DESIGN BASIS ONE - The safety-related portion of the CFS is protected from the effects of natural phenomena, such as earthquakes, tornadoes, hurricanes, floods, and external missiles (GDC-2).

SAFETY DESIGN BASIS TWO - The safety-related portion of the CFS is designed to remain functional after an SSE or to perform its intended function following postulated hazards such as internal missiles, or pipe break (GDC-4).

SAFETY DESIGN BASIS THREE - Safety functions can be performed, assuming a single active component failure coincident with the loss of offsite power (GDC-34).

SAFETY DESIGN BASIS FOUR - The CFS is designed such that the active components are capable of being tested during plant operation. Provisions are made to allow for inservice inspection of components at appropriate times specified in the ASME Boiler and Pressure Vessel Code, Section XI.

SAFETY DESIGN BASIS FIVE - The CFS is designed and fabricated to codes consistent with the quality group classification assigned by Regulatory Guide 1.26 and the seismic category assigned by Regulatory Guide 1.29. The power supply and control functions are in accordance with Regulatory Guide 1.32.

SAFETY DESIGN BASIS SIX - For a main feedwater line break inside the containment or an MSLB, the CFS is designed to limit high energy fluid to the broken loop and to provide a path for addition of auxiliary feedwater to the three intact loops.

SAFETY DESIGN BASIS SEVEN - For a main feedwater line break upstream of the main feedwater isolation valve (outside of the containment), the CFS is designed to prevent the blowdown of any steam generator and to provide a path for the addition of auxiliary feedwater.

SAFETY DESIGN BASIS EIGHT - The CFS is designed to provide a path to permit the addition of auxiliary feedwater for reactor cooldown under emergency shutdown conditions (GDC-34).

10.4.7.1.2 Power Generation Design Bases

POWER GENERATION DESIGN BASIS ONE - The CFS is designed to provide a continuous feedwater supply to the four steam generators at required pressure and temperature under anticipated steady-state and transient conditions.

POWER GENERATION DESIGN BASIS TWO - The CFS is designed to control the dissolved oxygen content and pH in the turbine cycle and the steam generators.

POWER GENERATION DESIGN BASIS THREE - The CFS is designed to maintain feedwater flow following a 50-percent step reduction in electrical load.

POWER GENERATION DESIGN BASIS FOUR - The CFS is designed to provide heated feedwater to the steam generators during startup and shutdown to minimize thermal stresses and preclude steam generator feedwater nozzle cracking.

10.4.7.2 System Description

10.4.7.2.1 General Description

The CFS, as shown in Figures 10.4-2 and 10.4-6, consists of three condensate pumps, two 67-percent capacity turbine-driven steam generator feedwater pumps, one 480 gpm capacity motor-driven feedwater pump, four stages of low-pressure feedwater heaters, and three stages of high-pressure feedwater heaters, piping, valves, and instrumentation. The condensate pumps take suction from the condenser hotwell and discharge the condensate into one common header which feeds the condensate demineralizers. The condensate demineralizers may be by-passed. Downstream of the condensate demineralizers, the header branches into three parallel trains. Each train contains four stages of low-pressure feedwater heaters. The trains join together at a common header which branches into two lines which go to the suction of the steam generator feedwater pumps. The turbine-driven feedwater pumps discharge the feedwater into two cross-connected parallel trains. Each of the two trains contains three stages of high-pressure feedwater heaters. Another feedwater path is provided to allow the low pressure feedwater heaters and the turbine-driven feed pumps to be bypassed during start-up and shut-down. The motor-driven feedwater pump in this path discharges into the common header downstream of the turbine-driven feed pumps and upstream of the high-pressure feedwater heaters. Downstream of the high-pressure feedwater heaters, the two trains are then joined into a common header, which divides into four lines which connect to the four steam generators. Each of the four lines contains a main feedwater control valve and main feedwater bypass control valve, a feedwater flow element, a power-operated main feedwater isolation valve (MFIV), an auxiliary feedwater connection, a chemical injection connection, and a check valve.

The condensate and feedwater chemical injection system, as shown in Figure 10.4-7, is provided to inject an oxygen control chemical and the pH control chemical into the condensate pump discharge downstream of the condensate demineralizers and additional oxygen and pH control chemicals into the four main feedwater lines connecting with the four steam generators. Injection points are shown in Figure 10.4-6.

During normal power operation, the continuous addition of oxygen and pH control chemicals to the condensate system is under automatic control, with manual control optional. As discussed in Section 10.3 5, the addition of the pH control chemical and oxygen control chemical establishes the design pH according to the condensate and feedwater system chemistry requirements and establishes a constant initial oxygen control chemical residual in the feed-water system so that oxygen inleakage can be scavenged.

The following measures have been taken to protect personnel from any toxic effects of chemicals:

a. The pH control chemical and oxygen control chemical solution and measuring tanks are provided with a 5-psig nitrogen blanket to minimize vapors in the general atmosphere of the turbine building.

b. The concentrated ammonium hydroxide and hydrazine are diluted to less than a 17-percent chemical solution.

c. Corrosion-resistant construction materials (stainless steels) are used throughout the storage and injection equipment.

d. Chemical mixing is accomplished by closed-loop recirculation with centrifugal recirculation pumps. No external tank mixers are used to agitate tank contents.

e. Ammonium hydroxide and hydrazine drum unloading is accomplished with air-driven drum bung pumps, which are nonsparking and pose no electrical hazard to personnel.

The manually controlled feedwater chemical addition system is provided for special plant conditions, such as hydrostatic test, hot standby, layup, etc. These conditions require high levels of pH and oxygen control chemical residual to minimize corrosion in the steam generators.

Component failures within the CFS which affect the final feedwater temperature or flow have a direct effect on the reactor coolant system and are listed in Table 10.4-5. Occurrences which produce an increase in feedwater flow or a decrease in feedwater temperature result in increased heat removal from the reactor coolant system, which is compensated for by control system action, as described in Section 7.7. Events which produce the opposite effect, i.e., decreased feedwater flow or increased feedwater temperature, result in reduced heat transfer in the steam generators. Normally, automatic control system action is available to adjust feedwater flow and reactor power to prevent excess energy accumulation in the reactor coolant system, and the increasing reactor coolant temperature provides a negative reactivity feedback which tends to reduce reactor power. In the absence of normal control action, either the high outlet temperature or high

pressure trips of the reactor by the reactor protection system are available to assure reactor safety. Loss of all feedwater, the most severe transient of this type, is examined in Chapter 15.0.

Refer to Section 5.4 for a discussion of steam generator design features to preclude fluid flow instabilities, such as water hammer. The feedwater connection on each of the steam generators is the highest point of each feedwater line downstream of the MFIV. The feedwater lines contain no high point pockets which, if present, could trap steam and lead to water hammer. The horizontal run length from the feedwater nozzle of each steam generator is minimized. The routing of the main feedwater lines is shown in Figures 1.2-12, 1.2-15, and 1.2-17.

During refuel 5, temporary non-safety related instrumentation was added for monitoring the temperature stratification occurring inside the Feedwater piping.

The non-safety auxiliary feedwater pump (NSAFP) minimum recirculation discharges to the condensate reject line to the Condensate Storage Tank as shown in Figure 10.4-2.

10.4.7.2.2 Component Description

Codes and standards applicable to the CFS are listed in Table 3.2-1. The CFS is designed and constructed in accordance with quality group B and seismic Category I requirements from the steam generator out to the torsional restraint upstream of the main feedwater isolation valves. The remaining piping of the CFS meets ANSI B31.1 requirements. Branch lines out to and including isolation valves for the auxiliary feedwater and chemical injection are designed and constructed in accordance with quality group B and seismic Category I requirements. Refer to Tables 10.1-1 and 10.4-6 for design data. Safety-related feedwater piping materials are discussed in Section 10.3.6.

MAIN FEEDWATER PIPING - Feedwater is supplied to the four steam generators by four 14-inch carbon steel lines. Each of the lines is anchored at the containment wall and has sufficient flexibility to provide for relative movement of the steam generators due to thermal expansion. The main feedwater line and associated branch lines between the containment penetration and the torsional restraint upstream of the MFIV are designed to meet the "no break zone" criteria, as described in NRC BTP MEB-3-1 (refer to Section 3.6).

MAIN FEEDWATER ISOLATION VALVES - One main feedwater isolation valve (MFIV) is installed in each of the four main feedwater lines outside the containment and downstream of the feedwater control valve. The MFIVs are installed to prevent uncontrolled blowdown from more than one steam generator in the event of a feedwater pipe rupture in the turbine building. The main feedwater check valve provides backup isolation. The MFIVs isolate the nonsafety-related portions from the safety-related portions of the system. In the event of a secondary cycle pipe rupture inside the containment, the MFIV limits the quantity of high energy fluid that

enters the containment through the broken loop and provides a pressure boundary for the controlled addition of auxiliary feedwater to the three intact loops. The valves are bi-directional, double disc, parallel slide gate valves. The valves are designed to utilize the system fluid (main steam) as the motive force to open and close. The actuator is of simple piston, with the valve stem attached to both the discs and the piston. The valve actuation (open or clsoe) is accomplished through a series of six electric solenoid pilot valves, which direct the system fluid to either the Upper Piston Chamber (UPS) or the Lower Piston Chamber (LPC), or a combination thereof. The six solenoid pilot valves are divided into two trains that are independently powered and controlled. Either train can independently perform the safety function to fast close the valve. Electrical solenoids are energized from separate Class 1E sources.

MAIN FEEDWATER CONTROL VALVES AND CONTROL BYPASS VALVES - The MF control valves are air-operated angle valves which automatically control feedwater between 30 percent and full power. The bypass control valves are air-operated globe valves, which are used during startup up to 25-percent power. The MF control valves and bypass control valves are located in the turbine building.

In the event of a secondary cycle pipe rupture inside the containment, the main feedwater control valve (and associated bypass valve) provide a diverse backup to the MFIV to limit the quantity of high energy fluid that enters the containment through the broken loop. For emergency closure, either of two separate solenoids, when de-energized, results in valve closure. Electrical solenoids are energized from separate Class 1E sources.

MAIN FEEDWATER CHECK VALVES – The Main Feedwater check valves are located in Area 5 inside the auxiliary building, upstream of the auxiliary feedwater connection and downstream of the main feedwater isolation valves. In the event of a secondary cycle pipe rupture outside containment, the main feedwater check valves provide a diverse backup to the MFIV to ensure the pressure boundary of any intact loop not receiving auxiliary feedwater.

In the event of a feedwater line rupture outside containment in the turbine building the feedwater check valve will close and terminate blowdown from the steam generator.

CHEMICAL ADDITION LINE CHECK VALVES AND ISOLATION VALVES - The check valves are located downstream from the isolation valves in the chemical addition lines. The check valves provide a diverse backup to the isolation valves to ensure the pressure boundary. The normally closed isolation valves are air-operated valves which fail closed.

CONDENSATE PUMPS - The three condensate pumps are motor driven and operate in parallel. Valving is provided to allow individual pumps to be removed from service. Pump capacity is sufficient to meet full power requirements with two of the three pumps in operation.

LOW-PRESSURE FEEDWATER HEATERS - Parallel strings of closed feedwater heaters are located in the condenser necks. The No. 1, 2, 3 and 4 heaters have integral drain coolers, and their drains are cascaded to the next lower stage feedwater heater in each case. The drains from No. 1 heaters are dumped to the main condenser. Feedwater leaving the No. 4 heaters is headered and goes to the steam generator feed pumps. The heater shells are carbon steel, and the tubes are stainless steel.

HIGH-PRESSURE FEEDWATER HEATERS - Parallel strings of three high-pressure feedwater heaters with integral drain coolers in heaters 6 and 7 are used. The No. 7 heaters are drained to the No. 6 heaters which, in turn, drain to the heater drain tank. The No. 5 heaters drain directly to the heater drain tank. The heater shells are carbon steel, and the tubes are stainless steel. A bypass line around the parallel strings of high-pressure feedwater heaters may be used to lower the temperature of the feedwater inlet to the steam generators such that reactor thermal power can be maximized within the licensed limit.

Isolation valves and bypasses are provided which allow each string of high-pressure and low-pressure heaters to be removed from service. System operability is maintained at reduced power with the parallel heaters and bypass line.

Provisions are made in all heater drain lines, except No. 5, which drains via the heater drain tank, to allow direct discharge to the condenser in the event the normal drain path is blocked.

HEATER DRAIN TANK - A single heater drain tank drains the shells of No. 5 and No. 6 feedwater heaters and provides reservoir capacity for drain pumping. The heater drain tank is installed in such a way that the No. 5 heaters drain freely by gravity flow. The drain level is maintained within the tank by a level controller in conjunction with a heater drain pump.

The heater drain tank is provided with an alternate drain line to the main condenser for automatic dumping upon high level. The alternate drain line is also used during startup and shutdown when it is desirable to bypass the drain piping for feedwater quality purposes.

HEATER DRAIN PUMPS - Two motor-driven heater drain pumps operate in parallel, taking suction from the heater drain tank and discharging it into the suction of the steam generator feed pumps.

The piping arrangement allows each heater drain pump to be individually removed from service while operating the remaining pump.

STEAM GENERATOR FEEDWATER PUMPS - The steam generator feedwater pumps (SGFP) operate in parallel and discharge to the high-pressure feedwater heaters. The pumps take suction following the No. 4, low-pressure feedwater heaters and discharge through the high-pressure feedwater heaters. Each pump is turbine driven with independent speed-control units. Steam for the turbines is supplied from the main steam header at low loads and from the moisture separator reheater outlet during normal operation.

Isolation valves are provided which allow each steam generator feed pump to be individually removed from service, while continuing operations at reduced capacity.

PUMP RECIRCULATION SYSTEMS - Minimum-flow control systems are provided to allow all pumps in the main condensate and feedwater trains to pump at the manufacturer's recommended minimum flow rate to prevent damage.

MOTOR-DRIVEN FEEDWATER PUMP - One motor-driven feedwater pump (MDFP) is provided to feed heated feedwater to the steam generators during start-up and shutdown conditions. The pump takes suction from the steam generator blowdown regenerative heat exchanger and discharges through the high-pressure feedwater heaters.

10.4.7.2.3 System Operation

STARTUP OPERATION – Feedwater can be provided to the steam generators using the condensate and feedwater system or the auxiliary feedwater system. Feedwater preheating requires the normal feedwater system in operation. Feedwater preheating is used to minimize thermal stresses on the feedwater piping and steam generator feedwater nozzles. At low pressures the condensate pumps can provide sufficient pressure to provide flow to the generators. Above condensate pressure a feedwater pump must also be used. A motor-driven feedwater pump (MDFP) is provided that may be used to provide feedwater at low powers(~1.5%) until there is adequate steam flow to operate the main feedwater pumps. The condensate system is used to provide a suction source for the MDFP. If the MDFP is used, the condensate flow path to this pump will bypass the low-pressure feedwater heaters. This condensate is directed to the steam generator blowdown regenerative heat exchanger, where it will be heated by the discharge from the steam generator blowdown flash tank if the steam generator blowdown (SGBD) system is in service. The feedwater flowpath then is directed through the high pressure feedwater system to the steam generators. The vapor from the SGBD flash tank is normally routed to the heater drain tank. The vapor in the heater drain tank enters the No. 5 high-pressure heaters which in turn will heat the feedwater for the steam generators.

Additional heating can be provided from main steam using portions of the auxiliary steam and the extraction steam systems to the No. 6 high-pressure heaters. Main steam can also be used to the No. 6 and 7 high-pressure heaters using additional portions of the main steam system and controls. During this time, two condenser steam dumps, AB UV-34 and AB UV-35, will be isolated. This feedwater preheating is removed from service prior to 25% thermal power. The feedwater is generally operated to maintain feedwater temperature to within 250°F of the steam generator temperature.

SHUTDOWN OPERATION – During shutdown operation several possible paths can be used. First the condensate system may be used alone when steam generator pressure is low. At higher required feedwater pressure the MDFP or the main feedwater pumps will be used. The feedwater may be preheated using the SGBD system through the regenerative heat exchanger when the SGBD system is in service. Additional heating can be utilized from the steam generator flash tank vapor. The steam generator flash tank is normally aligned to the heater drain tank where the vapor flows up to the No. 5 high-pressure heaters adding heat to the feedwater system. When below 25%, main steam can be used to heat the feedwater by using portions of the auxiliary steam system and the extraction steam system to the No. 5 high-pressure heaters. The feedwater is preheated to minimize thermal stresses on the feedwater piping and steam generator feedwater nozzles. This system generally maintains feedwater temperature to within 250°F of the steam generator temperature. If these systems are not available, then auxiliary feedwater will be used. Auxiliary feedwater does not provide preheating to the feedwater.

NORMAL OPERATION - Under normal operating conditions, system operation is automatic. Automatic level control systems control the levels in all feedwater heaters, the heater drain tank, and the condenser hotwells. Feedwater heater levels are controlled by modulating drain valves. Control valves in the discharges of the heater drain pumps control heater drain pump flows in reaction to the level in the heater drain tank.

A bypass line around the parallel strings of high-pressure feedwater heaters may be used to lower the temperature of the feedwater inlet to the steam generators such that reactor thermal power can be maximized within the licensed limit.

Three valves, two in the makeup line to the condenser from the condensate storage tank and another valve in the return line to the condensate storage tank, control the level in the condenser.

At very low power levels, feedwater is supplied by the motor-driven feedwater pump. Once sufficient steam pressure has been established, an SGFP turbine is started, and from this low power level to approximately 20-percent power, feedwater flow is under the control of the feedwater bypass control valves. Between approximately 20 and 30 percent power, feedwater flow is transferred from the feedwater bypass control valves to the main feedwater control valves. At greater than approximately 30-percent power, feedwater flow is controlled by the main feedwater control valves.

The feedwater flow to each steam generator is controlled by a three-element feedwater flow control system to maintain a programmed water level in the steam generator. The feedwater controllers regulate the main feedwater control valves, the bypass control valves, and feedwater pump speed by continuously comparing steam generator water level with the programmed level and feedwater flow with the pressure-compensated steam flow signal. The pump speed is increased or decreased by modulating the flow of steam admitted to the pump turbine drivers.

Ten-percent step load and 5-percent per minute ramp changes are accommodated without major effect in the CFS. The system is capable of accepting a 50-percent step load rejection. Under this transient, heater drain pump flow is lost, and the high pressure feedwater heater drain flows are dumped to the condenser via the heater drain tank. The condensate pumps pass full feedwater flow until heater drain pump flow is restored.

Trip of one turbine-driven feedwater pump will result in an automatic main turbine runback to approximately 62% rated load to assist the operator in mitigating the transient.

EMERGENCY OPERATION - In the event that the plant must be shut down and offsite power is lost, or a DBA occurs which results in a feedwater isolation signal, the MFIV and other valves associated with the main feedwater lines are closed. Coordinated operation of the auxiliary feedwater system (refer to Section 10.4.9) and the main steam supply system (refer to Section 10.3) is employed to remove decay heat.

10.4.7.3 Safety Evaluation

Safety evaluations are numbered to correspond to the safety design bases of Section 10.4.7.1.1.

SAFETY EVALUATION ONE - The safety-related portions of the CFS are located in the reactor and auxiliary buildings. These buildings are designed to withstand the effects of earthquakes, tornadoes, hurricanes, floods, external missiles, and other appropriate natural phenomena. Sections 3.3, 3.4, 3.5, 3.7(B), and 3.8 provide the bases for the adequacy of the structural design of these buildings.

SAFETY EVALUATION TWO - The safety-related portions of the CFS are designed to remain functional after a SSE. Sections 3.7(B).2 and 3.9(B) provide the design loading conditions that were considered. Sections 3.5 and 3.6 provide the hazards analyses to ensure that a safe shutdown, as out-lined in Section 7.4, can be achieved and maintained.

SAFETY EVALUATION THREE - The CFS safety functions are accomplished by redundant means, as indicated by Table 10.4-7. No single failure compromises the system's safety functions. All vital power can be supplied from either onsite or offsite power systems, as described in Chapter 8.0.

SAFETY EVALUATION FOUR - Preoperational testing of the CFS is performed as described in Chapter 14.0. Periodic inservice functional testing is done in accordance with Section 10.4.7.4.

Section 6.6 provides the ASME Boiler and Pressure Vessel Code Section XI requirements that are appropriate for the CFS.

SAFETY EVALUATION FIVE - Section 3.2 delineates the quality group classification and seismic category applicable to the safety-related portion of this system and supporting systems. Table 10.4-6 shows that the components meet the design and fabrication codes given in Section 3.2. All the power supplies and controls necessary for the safety-related functions of the CFS are Class 1E, as described in Chapters 7.0 and 8.0.

SAFETY EVALUATION SIX - For a main feedwater line break inside the containment or an MSLB, the MFIVs located in the auxiliary building and the main feedwater control valves located in the turbine building are automatically closed upon receipt of a feedwater isolation signal or low-low steam generator level signal. For each intact loop, the MFIV and main feedwater control valve.

and associated redundant isolation of the chemical addition line will close, forming a pressure boundary to permit auxiliary feedwater addition. The auxiliary feedwater system is described in Section 10.4.9.

SAFETY EVALUATION SEVEN - For a main feedwater line break upstream of the MFIV, the MFIVs are supplied with redundant power supplies and power trains to ensure their closure to isolate safety and nonsafety-related portions of the system. Branch lines downstream of the MFIVs contain normally closed, power-operated valves which close on a feedwater isolation signal. These valves fail closed on loss of power.

Releases of radioactivity from the CFS due to the main feedwater line break are minimal because of the negligible amount of radioactivity in the system under normal operating conditions. Additionally, following a steam generator tube rupture, the main steam isolation system provides controls for reducing accidental releases, as discussed in Section 10.3 and Chapter 15.0. Detection of radioactive leakage into and out of the system is facilitated by area radiation monitoring (discussed in Section 12.3.4), process radiation monitoring (discussed in Section 11.5), and steam generator blowdown sampling (discussed in Section 10.4.8).

SAFETY EVALUATION EIGHT - In the event of loss of offsite power, loss of the steam generator feedwater pumps, or other situations which may result in a loss of main feedwater, the feedwater isolation signal automatically isolates the feedwater system and permit the addition of auxiliary feedwater to allow a controlled reactor cooldown under emergency shutdown conditions. The auxiliary feedwater system is described in Section 10.4.9.

10.4.7.4 Tests and Inspections

10.4.7.4.1 Preservice Valve Testing

The MFIVs and feedwater control valves were checked for closing time prior to initial startup.

10.4.7.4.2 Preoperational System Testing

Preoperational testing of the CFS was performed as described in Chapter 14.0.

10.4.7.4.3 Inservice Inspections

The performance and structural and leaktight integrity of all system components are demonstrated by continuous operation.

The feedwater flow venturi is inspected for fouling and cleaned, as necessary, once every 18 months.

The redundant actuator power trains of each MFIV are subjected to the following tests:

a. Closure time - The valves are checked for closure time at each refueling.

Additional discussion of inservice inspection of ASME Code Class 2 and 3 components is presented in Section 6.6.

10.4.7.5 Instrumentation Applications

The main feedwater instrumentation, as described in Table 10.4-8, is designed to facilitate automatic operation, remote control, and continuous indication of system parameters. As described in Chapter 7.0, certain devices are involved in the secondary cycle pipe rupture protection system.

The feedwater flow to each steam generator is controlled by a three-element feedwater flow control system to maintain a programmed water level in the steam generator. The three-element feedwater controllers regulate the feedwater control valves by continuously comparing the feedwater flow and steam generator water level with the programmed level and the pressure-compensated steam flow signal (refer to Section 7.7).

The three-element feedwater controllers also develop the steam generator feedwater pump demand signal. The pump speed is increased or decreased in accordance with the pump speed demand signal by modulating the steam pressure at the inlet of the pump turbine drivers.

Both SGFP turbines are tripped upon any one of the following:

a. High-high level in any one steam generator

b. Feedwater isolation signal from the engineered safety features actuation system

c. Any condition which actuates safety injection (refer to Section 7.3)

d. Trip of all condensate pump motors

e. High feedwater system pressure

One turbine trips when any one of the following directly affects it:

a. Low lube oil pressure

b. Turbine overspeed

c. Low vacuum

d. Thrust bearing wear

e. Hydraulic Pressure Unit (HPU) header pressure

f. Turbine trip header oil pressure

A flow element with a transmitter is installed on the discharge of each of the condensate and heater drain pumps. The transmitters provide the automatic signals to open the minimum flow valves for the pumps.

A flow element is installed on the suction of each of the steam generator feedwater pumps to provide the control signal to open the minimum recirculation valves for the steam generator feedwater pumps.

A flow element with two flow transmitters is located on the inlet to each of the four steam generators to provide signals for the three-element feedwater control system.

The total water volume in the condensate and feedwater system is maintained through automatic makeup and rejection of condensate to the condensate storage tank. The system makeup and rejection are controlled by the condenser hotwell level controllers.

The system water quality is automatically maintained through the injection of an oxygen control chemical and a pH control chemical into the condensate system. The pH control chemical and oxygen control chemical injection is controlled by pH and the oxygen control chemical residual in the system, which is continuously monitored by the process sampling system.

Instrumentation, including pressure indicators, flow indicators, and temperature indicators, required for monitoring the system is provided in the control room.

10.4.8 STEAM GENERATOR BLOWDOWN SYSTEM

The steam generator blowdown system (SGBS) helps to maintain the steam generator secondary side water within the chemical specifications prescribed by the NSSS supplier. Heat is recovered from the blowdown and returned to the feedwater system. Blowdown is then either treated to remove impurities before being returned to the condenser, or discharged to the lake.

10.4.8.1 Design Bases

10.4.8.1.1 Safety Design Basis

Portions of the SGBS are safety-related and are required to function following a DBA and to achieve and maintain the plant in a post accident safe shutdown condition. The following safety design bases have been met:

SAFETY DESIGN BASIS ONE - The safety-related portion of the SGBS is protected from the effects of natural phenomena, such as earthquakes, tornadoes, hurricanes, floods, and external missiles (GDC-2).

SAFETY DESIGN BASIS TWO - The safety-related portion of the SGBS remains functional after an SSE or performs its intended function following a postulated hazard, such as internal missile, or pipe break (GDC-4).

SAFETY DESIGN BASIS THREE - Safety functions can be performed, assuming a single active component failure coincident with the loss of offsite power (GDC-34).

SAFETY DESIGN BASIS FOUR - The active components of the SGBS are capable of being tested during plant operation. Provisions are made to permit inservice inspection of components at appropriate times specified in the ASME Boiler and Pressure Vessel Code, Section XI.

SAFETY DESIGN BASIS FIVE - The SGBS is designed and fabricated to codes consistent with the quality group classification assigned by Regulatory Guide 1.26 and the seismic category assigned by Regulatory Guide 1.29. The power supply and control functions are in accordance with Regulatory Guide 1.32.

SAFETY DESIGN BASIS SIX - The capability of isolating components or piping of the SGBS is provided. This includes isolation of components to deal with leakage or malfunctions and isolation of nonsafety-related portions of the system. An isolation valve is provided in each main line which automatically closes to isolate the secondary side of the steam generator in the event of a DBA.

SAFETY DESIGN BASIS SEVEN - The containment isolation valves for the steam generator drain line are selected, tested, and located in accordance with the requirements of 10 CFR 50, Appendix A, General Design Criteria 54 and 56, and 10 CFR 50, Appendix J, Type C testing.

10.4.8.1.2 Power Generation Design Bases

POWER GENERATION DESIGN BASIS ONE - The SGBS is designed to ensure that blowdown treatment is compatible with the condensate and feedwater to ensure an effective secondary system water chemistry control program.

POWER GENERATION DESIGN BASIS TWO - The SGBS is designed to accommodate flows up to 44,000 pounds per hour (nominally 90 gpm) per steam generator, while returning to the feedwater system a sizable portion of the heat removed from the steam generators.

POWER GENERATION DESIGN BASIS THREE - During normal operation without primary-to-secondary leakage, the SGBS is designed to process blowdown to meet the chemical composition limits for release to the environment or for return to the condenser hotwell/condensate storage tank.

POWER GENERATION DESIGN BASIS FOUR - During periods of abnormal operation with a primary-to-secondary steam generator leak, the SGBS maintains the plant effluent within the radiological specification for plant discharge.

POWER GENERATION DESIGN BASIS FIVE - Portions of the SGBS use design and fabrication codes consistent with quality group D (augmented) as assigned by Regulatory Guide 1.143 for radioactive waste management systems.

10.4.8.2 System Description

10.4.8.2.1 General Description

The SGBS is shown in Figure 10.4-8. The system consists of a flash tank, a regenerative heat exchanger, a nonregenerative heat exchanger, filters, demineralizers, a surge tank, and discharge and drain pumps.

The SGBS is designed to control the secondary side water chemistry, in conjunction with the condensate and feedwater chemical addition system and the condensate demineralizer system, to meet water chemistry specifications. The SGBS serves to remove impurities in the blowdown that originate from sources such as primary-to-secondary leakage, main condenser leakage, sodium carry-over from deep-bed condensate demineralizers, and the corrosion and wear of other secondary cycle components and piping.

Each of the four steam generators has its own blowdown and sample lines. The total continuous blowdown range of 60-360 gpm is provided to administratively permit blowdown to match the variable and cyclic nature of the sources of contamination.

The steam generator blowdown fluid (blowdown) is extracted from the steam generators through a blowdown sparger ring located in the shell side of the steam generator just above the tube sheet, where impurities are expected to accumulate.

The blowdown flow rate from each steam generator is controlled manually using throttling valves just upstream of the blowdown flash tank. The flashed vapor from the flash tank is sent to the number five feedwater heater (or to the condenser or atmosphere during startup).

The liquid effluent from the flash tank is first cooled in the regenerative heat exchanger (heat recovery medium is a portion of the condensate flow) and then further cooled by the nonregenerative heat exchanger (cooling medium is service water). The fluid may then be filtered and/or demineralized before being returned to the condenser or before being discharged.

The operator has the option of discharging the blowdown to the environment or returning the blowdown to the condenser. Any limitations on discharges from the plant are within the limits defined by the Offsite Dose Calculation Manual (ODCM).

Leak detection from the SGBS is provided by visual examination and by the floor drain system described in Section 9.3.3.

Section 3.6 provides an evaluation that demonstrates that the pipe routing is physically separated from essential systems to the maximum extent practical. Protection mechanisms that may be required to mitigate the dynamic effects of piping ruptures are also discussed in Section 3.6.

10.4.8.2.2 Component Description

Codes and standards applicable to the SGBS are listed in Tables 3.2-1 and 10.4-9. The SGBS is designed and constructed in accordance with the following quality group requirements: Steam generator blowdown lines from the steam generators to the outer SGBS isolation valve are quality group B and are seismic Category I. The flash tank, regenerative heat exchanger, and nonregenerative heat exchangers, which contain minimal radioactivity, are located in the turbine building; all other components are located in seismically designed buildings. Components downstream of the outer SGB isolation valve are quality group D (augmented). Design data for the SGBS components are listed in Table 10.4-9.

STEAM GENERATOR BLOWDOWN FLASH TANK - The flash tank pressure is maintained between 185 and 135 psia. This causes the high-temperature high-pressure blowdown liquid to be flashed (i.e., reduced in temperature and pressure). The four steam generator blowdown lines enter the flash tank tangentially at equally spaced distances around the tank.

STEAM GENERATOR REGENERATIVE BLOWDOWN HEAT EXCHANGERS - The heat exchanger cools the blowdown from the flash tank. The heat exchanger is of shell and welded tube design. The cooling medium is condensate water.

STEAM GENERATOR NONREGENERATIVE HEAT EXCHANGER - The heat exchanger cools the blowdown from the flash tank or the regenerative heat exchanger to 120° F before it flows to the demineralizers. The heat exchanger is of shell and welded tube design. The cooling medium is service water.

STEAM GENERATOR BLOWDOWN FILTER - This filter removes particulate matter from the steam generator blowdown fluid before it flows to the demineralizers. This serves to extend the operating life of the demineralizer resins. Unfiltered blowdown is normally discharged to the lake.

STEAM GENERATOR BLOWDOWN MIXED-BED DEMINERALIZERS – Two sets of two parallel, 50-percent capacity, mixed-bed demineralizers normally operated one set at a time are provided in the blowdown treatment train. Conductivity monitors are located downstream of the demineralizers to signal exhaustion of the upstream bed. When the in-service set of demineralizers is exhausted, the set of demineralizers with the fresh resin is placed into service. The exhausted set of demineralizers is then removed from service, the resin replaced and this freshly recharged set of demineralizers is left in standby until the in-service demineralizer set exhausts. Blowdown that is not demineralized is normally discharged to the lake.

STEAM GENERATOR BLOWDOWN SURGE TANK - The surge tank collects the blowdown water prior to discharge from the system, and provides the necessary suction head for the discharge pumps.

STEAM GENERATOR BLOWDOWN BYPASS DISCHARGE PIPING – The bypass piping allows for the option to direct blowdown flow to the lake without using the surge tank or the discharge pumps. The piping is connected to the inlet line to the surge tank and reconnected to the blow down discharge line upstream of BMFO0054.

STEAM GENERATOR BLOWDOWN DISCHARGE PUMP - The inline centrifugal pumps are provided to pump the treated blowdown water from the surge tank to the plant discharge, or recycle the blowdown water through the demineralizer train. One pump is normally in service unless bypassed. A second pump serves as a backup.

STEAM GENERATOR DRAIN PUMP - Two inline centrifugal pumps are provided to pump the blowdown to the process train or the secondary cycle to drain a steam generator.

BLOWDOWN LINES - Blowdown from each of the four steam generators is conveyed to the SGB flash tank by four 4-inch lines. Each of the lines is anchored at the containment wall and has sufficient flexibility to provide for relative movement of the steam generators due to thermal expansion. The blowdown line and associated branch lines between the reactor building penetration and the first torsional restraint, past the blowdown isolation valve (BIV) are designed to meet the "no break zone" criteria, as described in NRC BTP MEB 3-1.

BLOWDOWN ISOLATION VALVES - One BIV is installed in each of the four blowdown lines outside the containment. The BIVs are installed to prevent uncontrolled blowdown from more than one steam generator. Failure of the blowdown isolation valve for an unaffected steam generator after an MSLB results in blowdown from that steam generator to the blowdown flash tank. This steam loss has less effect on the primary system than does the steam lost as a result of other failures discussed in Section 15.1.5. The valves isolate the nonsafety-related portions from the safety-related portions of the system. The valves are air-operated globe valves which fail closed. For emergency closure, either of two safety-related solenoids is deenergized to dump air supplied to the valve actuator. The electrical solenoids are energized from separate Class 1E sources and are tripped upon receipt of a SGBSIS (AFAS) signal.

An additional nonsafety-related solenoid is provided which is de-energized to close the BIV upon receipt of a high radiation level signal or other system-related trip signals.

SAMPLE ISOLATION VALVES - Three safety-related sample isolation valves (SIV) are installed in each of the four sample lines. Two are inside the containment (one from each sample point), and one is outside. The SIVs are installed to prevent uncontrolled blow-down from more than one steam generator. The valves isolate the

nonsafety-related portions from the safety-related portions of the system. The valves are solenoid operated, are energized from separate Class 1E sources, and tripped upon receipt of a SGBSIS (AFAS) signal.

An additional nonsafety-related solenoid valve is provided outside the containment which is de-energized to close upon receipt of a high radiation level signal or other system-related trip signal.

INSULATION - Portions of the sample lines associated with the containment penetration and the safety related portions of the drain lines have insulation designed to withstand the effects of a loss-of-coolant accident or other high energy line break. The purpose of the insulation is to mitigate the thermal transfer of heat into the water due to containment heat-up following a LOCA/HELB, and limit the potential build-up of internal pressure in the pipe due to the expansion of the water. The insulation is designed not to lose its insulation capability during and after the event.

10.4.8.2.3 System Operation

During full power operation, the SGBS can be operated in one of several different modes, depending upon the type and level of contamination in the blowdown. The operator determines, based on prior knowledge of secondary cycle water chemistry conditions and radioactivity levels in conjunction with ODCM limitations and state and local discharge permit restrictions, the extent of processing required by the blowdown system.

NORMAL OPERATION WITH FULL SYSTEM PROCESSING - Normally, the SGBS is operated, utilizing the full processing capability of the system with heat recovery.

Figure 10.4-8 shows valve positions aligned to process the blowdown fluid through the demineralizer processing portion of the system and then to the secondary cycle.

The blowdown flash tank pressure is normally maintained from 185 psia to a minimum of 135 psia (corresponding to No. 5 feedwater heater pressure at approximately 80-percent power) by a backpressure control valve in the flash tank vent line. Depending upon station load, approximately 23 to 30 percent of the blowdown flow will be flashed into vapor. This flow, containing about half of the total blowdown heat energy, is returned to the feedwater system via the No. 5 feedwater heater shell.

The remaining saturated fluid from the flash tank is first cooled by the regenerative heat exchanger to an intermediate temperature (≤ 190°F) and then further cooled by the nonregenerative heat exchanger to 120°F. Level control valves in each of the processing flow paths (to the condenser, condensate storage tank, and blowdown surge tank) maintain a level in the flash tank that provides an elevation head on the fluid entering the heat exchangers for suppression of further fluid flashing.

Additional heat recovery is attained with the regenerative heat exchanger which uses a portion of the condensate flow (less than 2 percent of VWO flow) for cooling water. This condensate flow is diverted from the condensate system downstream of the condensate

demineralizers and is returned to the heater drain tank. The outlet temperature from the regenerative heat exchanger is normally maintained at ≤ 190°F with the temperature control valve provided in the line to the heater drain tank to control the condensate flow through the regenerative heat exchanger. During periods of low blowdown flow rates, a lower regenerative outlet temperature can be obtained.

Cooling water for the nonregenerative heat exchanger is service water. A three-way temperature control valve is provided in the bypass line around the nonregenerative heat exchanger to maintain a high service water flow rate through the shell side of the heat exchanger, during periods of low service water temperatures and low blowdown flow rates.

The high service water flow rates are required to minimize particle deposition within the heat exchanger and thereby reduce the fouling tendency of the heat exchanger.

Following the flash tank and heat exchangers, the liquid portion of the blowdown is directed through a radiation monitor prior to processing through two filters in parallel and two sets of two parallel 50-percent capacity demineralizers operated in series. In addition, strainers are provided upstream of each filter and downstream of each demineralizer. The radiation monitor alarms and terminates blowdown on a high reading indicative of a steam generator tube rupture. The processing system is designed to operate continuously provided the resin beds are periodically replaced. The effluent water normally meets the specifications for water purity and radioactivity for return to the condenser hotwell. Resin bed exhaustion is signaled by a high conductivity alarm from either of two conductivity meters; the first is located in the common line downstream of the first set of parallel demineralizers, and the second is located in the common line downstream of the second set of parallel demineralizers. A high conductivity alarm indicates exhaustion of the upstream beds. After replacing the resin in the exhausted beds, the order of flow through the parallel beds in series is reversed.

The processed blowdown can be sent either to the condenser or discharged to the environment. If the blowdown is to be discharged directly to the environment, the fluid is directed into the steam generator blowdown surge tank or to the steam generator blowdown bypass discharge piping. From the surge tank, the fluid is pumped by the discharge pumps to the radwaste building discharge line through a radiation monitor. The surge tank level is controlled by a level valve in the discharge line from the pumps. Level instrumentation is provided on the surge tank to prevent damage to the discharge pumps on loss of level. The steam generator blowdown bypass discharge piping will allow blowdown fluid to be taken off up stream of the surge tank, which will allow the surge tank and the discharge pumps to be bypassed. This will allow the option to use the system pressure to discharge the blowdown fluid to the lake without the discharge pumps or surge tank.

Upon indication of high activity by the radiation monitors, the blowdown discharge valve is closed and the discharge pumps are stopped, automatically terminating discharge, and the blowdown isolation valve in each blowdown line is closed, thereby automatically terminating blowdown. High level in the surge tank terminates blowdown by automatically closing the blowdown isolation valves and the flash tank level control to the blowdown surge tank. In addition, discharge of blowdown to the environment is automatically terminated on a low dilution water flow signal. A flow path can be established to allow the fluid in the surge tank to be reprocessed through the processing portion of the blowdown system.

During periods of primary-to-secondary leakage, the blowdown fluid is purified by the processing portion of the blowdown system to limit any radioactive contamination of the secondary system.

OPERATION WITHOUT BLOWDOWN PROCESSING - As permitted by the type and level of the contaminants in the blowdown fluid, the operator can determine the extent of system processing required to meet the chemistry requirements for either discharge or return to the condenser. The radiation monitor alarms and terminates blowdown on a high reading indicative of a steam generator tube rupture, and alarms only when the operator should be made aware that processing may be required. A bypass flow path can be established from a point downstream of the heat exchangers to either the condenser or the surge tank for periods of operation where processing within the blowdown system is not desired.

During normal operating conditions with no significant radioactive contaminants in the system and where the chemistry of the blowdown fluid meets the ODCM limitations for release restrictions, the processing portion of the system can be bypassed and the fluid can be discharged. When discharging, the fluid is directed to the surge tank and through the radiation monitor to the environment.

Also, during periods of normal plant operation with the condensate demineralizers in service and with insignificant radioactive contaminants in the system, the processing portion of the blowdown system (i.e. filters and demineralizers) can be bypassed and the fluid can be returned directly to the condenser, provided that the feedwater remains within the chemistry specifications.

OPERATION WITH REGENERATIVE HEAT EXCHANGER OUT OF SERVICE - During periods of operation when the regenerative heat exchanger is out of service, a bypass line is provided to permit continued oper-

ation. The maximum blowdown rate is then limited by the nonregenerative heat exchanger's capacity for reducing the fluid temperature to less than 120°F. System operation downstream of the heat exchangers continues to be based on the processing requirements to maintain the chemistry specifications.

OPERATION WITH THE NONREGENERATIVE HEAT EXCHANGER OUT OF SERVICE - In this mode, three-way temperature control valve in the bypass line around the nonregenerative heat exchangers is manually maintained open. The temperature control valve which maintains blowdown fluid outlet temperature from the regenerative heat exchanger is set for approximately 150øF. This temperature setting may require that the demineralizers be bypassed in order to prolong resin life and preclude the possibility of eluting the radioactivity that has been adsorbed by the resin. With the flash tank venting to the condenser, the total steam generator blowdown then is limited to about 50,000 lbs/hr.

USE OF THE STEAM GENERATOR BLOWDOWN DEMINERALIZERS BY THE SECONDARY LIQUID WASTE (SLWS) - As a backup to the SLWS demineralizer, interties have been provided between the SLWS and the steam generator blowdown system to allow the processing of SLWS low TDS waste by either of the two sets of two parallel steam generator blowdown demineralizers. The system is designed so that blowdown can be processed by the set of demineralizers not being used for processing the low TDS waste.

SAMPLING - The blowdown system sample points are arranged to provide selectively extracted samples from each of the steam generator drums, each individual blowdown line, and the surge tank. The nuclear sample connection from the blowdown lines is located as close to the steam generator as possible to minimize transit time from the steam generator water mass to the point of use and to ensure maximum sample quality.

The process sampling system is normally used to continuously determine the chemical composition of the liquid in each of the steam generators. The process sample extraction points are located in the turbine building.

A continuous inline radioactivity monitor is provided to detect the presence of activity which would indicate a primary-to-secondary leak. Anytime the unprocessed blowdown activity level exceeds 1.0×10^{-5} Ci/gm (excluding tritium), periodic samples are taken at the nuclear sampling station and analyzed in the hot lab to ascertain the affected steam generator and to monitor any increase in primary-to-secondary leakage. The nuclear sampling system is capable of receiving intermittent or continuous samples from either each of the steam generator drums or each of the individual blowdown lines. The chemical composition is continuously monitored by the process sampling system.

STARTUP AND SHUTDOWN OPERATION - The startup and shutdown operations of the blowdown system are the same as for normal operation, except that the secondary cycle is not able to receive the flash tank vent fluid. When feedwater is not flowing through the No. 5 feedwater heater, the flash tank vent is directed to the condenser. If condenser vacuum is not being maintained, the vent is directed to the atmosphere. In the event that the condensate pumps (which would provide condensate cooling flow for the regenerative heat exchanger) or the heater drain tank are unavailable, it is possible for the liquid blowdown to be returned to the environment or the condensate storage tank rather than the condenser. Under these conditions, the total steam generator blowdown flow is limited by the capability of the nonregenerative heat exchanger to maintain cooled blowdown below the required limits. When demineralization or discharge to the environment is required, a 120°F limit is maintained. If the blowdown is being directed to the condensate storage tank, the blowdown is cooled to a maximum of 120°F.

During shutdown with the steam generator depressurized, the steam generator drain pumps may be employed to drain and dispose of or process steam generator water. A connection is available to the suction side of the condensate pumps for processing of the liquid through the condensate demineralizers and bypassing the condenser.

Wet layup capabilities are provided to protect the steam generators from corrosive attack during inactive periods. This is achieved by ensuring the exclusion of oxygen and controlling the pH of the water mass inside the steam generators.

EMERGENCY OPERATION - The isolation valves of the blowdown and sample systems are closed automatically by the signal from system radiation monitors, by the condenser air removal exhaust monitor, and/or by the SGBSIS (AFAS) signal. All of these valves are capable of being remotely closed from the control room.

Following a radiation monitor alarm, or start of the auxiliary feedwater system, the sample system isolation valves may be reopened from the control room. This capability permits identification, and subsequent isolation, of the steam generator responsible for fission product transfer from the primary to the secondary system. After reset of the AFAS, the blowdown system isolation valves may be reopened from the control room.

10.4.8.3 Radioactive Releases

In the event radioactivity is transmitted to the secondary side of the steam generator, it will show up in the blowdown fluid. For conditions of primary-to-secondary leakage, all blowdown fluid is processed and returned to the main condenser. Any discharge of radioactive fluid from this system is considered unlikely.

If the blowdown fluid is being discharged to the environment and the activity level in the discharged fluid approaches the limit defined by the ODCM, the radiation monitor in the discharge line alarms and automatically terminates discharge and blowdown. In addition, blowdown discharge to the environment is automatically terminated on a low dilution water flow signal.

When discharging to the environment, the discharge temperature is between 60-120°F, exit pressure is 35-150 psig, and the flow rate is a maximum of 270 gpm.

The operating criteria for the secondary side blowdown system are dictated by the need for limiting the secondary side build-up of dissolved solids. The equilibrium radioactive concentrations based on a assumed primary-to-secondary leakrate are given in Chapter 11.0 for the steam generators.

10.4.8.4 Safety Evaluation

Safety evaluations are numbered to correspond to the safety design bases in Section 10.4.8.1.

SAFETY EVALUATION ONE - The safety-related portions of the SGBS are located in the reactor and auxiliary buildings. These buildings are designed to withstand the effects of earthquakes, tornadoes, hurricanes, floods, external missiles, and other appropriate natural phenomena. Sections 3.3, 3.4, 3.5, 3.7(B), and 3.8 provide the bases for the adequacy of the structural design of these buildings.

SAFETY EVALUATION TWO - The safety-related portions of the SGBS are designed to remain functional after a SSE. Sections 3.7(B).2 and 3.9(B) and (N) provide the design loading conditions that were considered. Sections 3.5 and 3.6 provide the hazards analyses to assure that a safe shutdown, as outlined in Section 7.4, can be achieved and maintained.

SAFETY EVALUATION THREE - The component and system description for the SGBS shows that complete redundancy is provided and, as indicated by Table 10.4-10, no single failure will compromise the system's safety functions. All vital power can be supplied from either onsite or offsite power systems, as described in Chapter 8.0.

SAFETY EVALUATION FOUR - Periodic inservice functional testing is done in accordance with Section 10.4.8.5. Section 6.6 provides the ASME Boiler and Pressure Vessel Code, Section XI requirements that are appropriate for the SGBS.

SAFETY EVALUATION FIVE - Section 3.2 delineates the quality group classification and seismic category applicable to the safety-related portion of this system and supporting systems. Table 10.4-9 shows that the components meet the design and fabrication codes given in Section 3.2. All the power supplies and control function necessary for the safety functions of the system are Class 1E, as described in Chapters 7.0 and 8.0.

SAFETY EVALUATION SIX - Section 10.4.8.2 describes provisions made to identify and isolate leakage or malfunction and to isolate the steam generator water inventory from the nonsafety-related portions of the system.

SAFETY EVALUATION SEVEN - Sections 6.2.4 and 6.2.6 provide the safety evaluation for the system containment isolation arrangement and testability for the steam generator drain line penetration.

10.4.8.5 Tests and Inspections

The performance and structural and leaktight integrity of all system components is demonstrated by continuous operation.

The SGBS is testable through the full operational sequence that brings the system into operation for reactor shutdown and for DBAs, including operation of applicable portions of the protection system and transfer between normal and standby power.

The safety-related components are located to permit preservice and inservice inspections.

10.4.8.6 Instrumentation Applications

The SGBS instrumentation, as described in Table 10.4-11, is designed to facilitate automatic operation, remote control, and continuous indication of system parameters. As described in Chapter 7.0, certain devices are involved in the protection system.

The process radiation monitors provided downstream of the steam generator blowdown flash tank and in the plant discharge line are discussed in Section 11.5.

10.4.9 AUXILIARY FEEDWATER SYSTEM

The auxiliary feedwater system (AFS) is a reliable source of water for the steam generators. The AFS, in conjunction with safety valves in the main steam lines, is a safety-related system, the function of which is to remove thermal energy from the reactor coolant system by releasing secondary steam to the atmosphere. The AFS also provides emergency water following a secondary side line rupture. Removal of heat in this manner prevents the reactor coolant pressure from increasing and causing release of reactor coolant through the pressurizer relief and/or safety valves.

The auxiliary feedwater system may also be used following a reactor shutdown in conjunction with the condenser dump valves or atmospheric relief valves, to cool the reactor coolant system.

10.4.9.1 Design Bases

10.4.9.1.1 Safety Design Bases

SAFETY DESIGN BASIS ONE - The AFS is protected from the effects of natural phenomena, such as earthquakes, tornadoes, hurricanes, floods, and external missiles (GDC-2).

SAFETY DESIGN BASIS TWO - The AFS is designed to remain functional after an SSE or to perform its intended function following a postulated hazard, such as internal missile, or pipe break (GDC-4).

SAFETY DESIGN BASIS THREE - The safety functions can be performed, assuming a single active component failure coincident with the loss of offsite power. The system requirements may be met with a complete loss of ac power (GDC-34).

SAFETY DESIGN BASIS FOUR - The AFS is designed so that the active components are capable of being tested during plant operation. Provisions are made to allow for inservice inspection of components at appropriate times specified in the ASME Boiler and Pressure Vessel Code, Section XI.

SAFETY DESIGN BASIS FIVE - The AFS is designed and fabricated consistent with the quality group classification assigned by Regulatory Guide 1.26 and the seismic category assigned by Regulatory Guide 1.29. The power supply and control functions are in accordance with Regulatory Guide 1.32.

SAFETY DESIGN BASIS SIX - The AFS, in conjunction with the condensate storage tank (classified as special scope) or essential service water system, provides feedwater to maintain sufficient steam generator level to ensure heat removal from the reactor coolant system in order to achieve a safe shutdown following a main feedwater line break, a main steamline break, or an abnormal plant situation requiring shutdown. The auxiliary feedwater system is capable of delivering full flow when required, after detection of any accident requiring auxiliary feedwater (refer to Chapter 15.0).

SAFETY DESIGN BASIS SEVEN - The capability to isolate components or piping is provided, if required, so that the AFS safety function is not compromised. This includes isolation of components to deal with leakage or malfunctions and to isolate portions of the system that may be directing flow to a broken secondary side loop.

SAFETY DESIGN BASIS EIGHT - The AFS has the capacity to be operated locally as an alternate, redundant means of feedwater control, in the unlikely event that the control room must be evacuated.

10.4.9.1.2 Power Generation Design Bases

The AFS has no power generation design bases. The condensate and feedwater system is designed to provide a continuous feedwater supply to the steam generators during startup normal plant operation, and shutdown. Refer to Section 10.4.7.

10.4.9.2 System Description

10.4.9.2.1 General Description

The system consists of two motor-driven pumps, one steam turbine-driven pump, and associate piping, valves, instruments, and controls, as shown on Figure 10.4-9 and described in Table 10.4-12. Figure 10.4-10 shows the piping and instrumentation for the steam turbine.

Each motor-driven auxiliary feedwater pump will supply 100 percent of the feedwater flow required for removal of decay heat from the reactor. The turbine-driven pump is sized to supply up to twice the capacity of a motor-driven pump. This capacity is sufficient to remove decay heat and to provide adequate feedwater for cooldown of the reactor coolant system at 50°F/hr within 1 hour of a reactor trip from full power.

Normal flow is from the condensate storage tank (CST) to the auxiliary feedwater pumps. Two redundant safety-related back-up sources of water from the essential service water system (ESWS) are provided for the pumps. For a more detailed description of the automatic sequence of events, refer to Section 10.4.9.2.3.

Three standby water accumulator tanks are provided in the pump suction piping to the turbine-driven pump to ensure that there is adequate safety grade water volume to accomplish a swap over from the non-safety grade water source to the safety grade water source.

The condensate storage tank has sufficient capacity to allow the plant to remain at hot standby for 4 hours and then cool down the primary system at an average rate of 50°F per hour to a temperature of 350°F. Initially, sensible and decay heat is removed from the reactor coolant system to reduce the temperature from a full-power operation average temperature of 588°F to a nominal hot standby temperature of 500°F. Subsequently, the reactor is brought down to 350°F at 50°F/hr. Refer to Section 9.2.6 for a description of the condensate storage system.

The non-safety auxiliary feedwater pump (NSAFP), installed in the Condensate Storage and Transfer System (CSTS), functions to provide an alternate source of cooling water to the steam generators through the Auxiliary Feedwater system as shown in Figure 10.4-9. The NSAFP is powered from the Station Blackout Diesel Generators (SBO DGs) as described in section 8.3.1.1.1.3. The SBO DGs and NSAFP will be manually aligned as deemed necessary.

Hose connections are available for connection of a portable auxiliary feedwater pump in the event of an extended loss of all AC power. These connections support implementation of beyond-design-basis external event Phase 2 coping strategies to maintain or restore core cooling as described in Appendix 3D.

In order to remove decay heat by the steam generators, auxiliary feedwater must be supplied to the steam generators in the event that the normal source of feedwater is lost. The minimum required flow rate is 470 gpm for decay heat removal during plant normal cooldown. The single active failure for Chapter 15 events that take credit for auxiliary feedwater flow for decay heat removal assumes one of the two motor-driven auxiliary feedwater pumps is operable. The overall minimum auxiliary feedwater flow rate is 563 gpm to fulfill the acceptance criteria for the feedline break analysis in Section 15.2.8.

Provisions are incorporated in the AFS design to allow for periodic operation to demonstrate performance and structural and leaktight integrity. Leak detection is provided by visual examination and in the floor drain system described in Section 9.3.3.

10.4.9.2.2 Component Description

Codes and standards applicable to the AFS are listed in Tables 3.2-1 and 10.4-12. The AFS is designed and constructed in accordance with quality groups B and C and seismic Category I requirements.

MOTOR-DRIVEN PUMPS - Two auxiliary feedwater pumps are driven by ac-powered electric motors supplied with power from independent Class 1E switchgear busses. Each horizontal centrifugal pump takes suction from the condensate storage tank, or alternatively, from the ESWS. Pump design capacity includes continuous minimum flow recirculation, which is controlled by restriction orifices.

TURBINE-DRIVEN PUMP - A turbine-driven pump provides system redundancy of auxiliary feedwater supply and diversity of motive pumping power. The pump is a horizontal centrifugal unit. Pump bearings are cooled by the pumped fluid. Pump design capacity includes continuous minimum flow recirculation. Power for all controls, valve operators, and other support systems is independent of ac power sources.

Steam supply piping to the turbine driver is taken from two of the four main steam lines between the containment penetrations and the main steam isolation valves. Each of the steam supply lines to the turbine is equipped with a locked-open gate valve, normally closed air-operated globe valve with air-operated globe bypass to keep the line warm, and two nonreturn valves. Air-operated globe valves are equipped with dc-powered solenoid valves. These steam supply lines join to form a header which leads to the turbine through a normally closed, dc motor-operated mechanical trip and throttle valve. The main steam system is described in Section 10.3.

The steam lines contain provisions to prevent the accumulation of condensate. The turbine driver is designed to operate with steam inlet pressures ranging from 92 to 1,290 psia. Exhaust steam from the turbine driver is vented to the atmosphere above the auxiliary boiler building roof. Refer to Safety Evaluation Two for a discussion of the design provisions for the exhaust line.

PIPING AND VALVES - All piping in the AFS is seamless carbon steel. Welded joints are used throughout the system, except for flanged connections at the pumps.

The piping from the ESWS to the suction of each of the auxiliary feedwater pumps is equipped with a motor-operated butterfly valve, an isolation valve, and a nonreturn valve. Each line from the condensate storage tank is equipped with a motor-operated gate

valve and a nonreturn valve. Each motor-driven pump discharges through a nonreturn valve and a locked-open isolation valve to feed two steam generators through individual sets of a locked open isolation valve, a normally open, motor-operated control valve, a check valve followed by a flow restriction orifice, and a locked-open globe valve. The turbine-driven pump discharges through a nonreturn valve, a locked-open gate valve to each of the four steam generators through individual sets of a locked-open isolation valve, a normally open air-operated control valve, followed by a nonreturn valve, a flow restriction orifice, and a locked-open globe valve.

The turbine-driven pump discharge control valves are positionable, air operated valves. At each connection to the four main feedwater lines, the auxiliary feedwater lines are equipped with check valves.

The system design precludes the occurrence of water hammer in the main feedwater inlet to the steam generators. For a description of prevention of water hammer, refer to Section 10.4.7.2.1.

TANKS - Three standby water accumulator tanks are provided in the pump suction piping to the turbine-driven pump to ensure that there is adequate safety grade water volume to accomplish a swap over from the non-safety grade water source to the safety grade water source.

10.4.9.2.3 System Operation

NORMAL PLANT OPERATION - The AFS is not required during normal power generation. The pumps are placed in standby, lined up with the condensate storage tank, and are available if needed.

EMERGENCY OPERATION - In addition to remote manual-actuation capabilities, the AFS is aligned to be placed into service automatically in the event of an emergency. See section 7.3.6.1.1 for a description of this operation.

The common water supply header from the condensate storage tank contains a locked-open, 12-inch, butterfly isolation valve. Correct valve position is verified by periodic surveillance. In the case of a failure of the water supply from the condensate storage tank, the normally closed, motor-operated butterfly valves from the ESWS are automatically opened on low suction header pressure. Valve opening time and pump start time are coordinated to ensure adequate suction pressure with either onsite or offsite power available.

If a motor-driven pump supplying two of the three intact steam generators fails to function, the turbine-driven pump automatically starts when a low-low level is reached in two of the four steam generators. During all of the above emergency conditions, the normally open control valves are remote manually operated.

During all of the above emergency conditions, the motor-driven pump normally open control valves are automatically operated to limit runout flow under all secondary side pressure conditions. This is required to prevent pump suction cavitation at high flow rates. The turbine-driven pump design includes a lower NPSH requirement. Therefore, the turbine-driven pump control valves are remote manually operated.

Low pump discharge pressure alarms assists alerting in the operator to a secondary side break. The operator then determines which Steam Generator is faulted, and closes the appropriate discharge control valves. For a postulated unisolable double-ended secondary system pipe rupture, refer to Chapter 15.0 for further information on the required operator actions and times assumed in the applicable accident analysis.

10.4.9.3 Safety Evaluation

Safety evaluations are numbered to correspond to the safety design bases in Section 10.4.9.1.1.

SAFETY EVALUATION ONE - The AFS is located in the auxiliary building, except for the Turbine Driven Auxiliary Feedwater Pump exhaust pipe and the section of pump recirculation piping mentioned in the note below. This building is designed to withstand the effects of earthquakes, tornadoes, hurricanes, floods, external missiles, and other appropriate natural phenomena. Sections 3.3, 3.4, 3.5, 3.7(B), and 3.8 provide the bases for the adequacy of the structural design of the auxiliary building. (See the discussion in Safety Evaluation Two, pertaining to the exhaust steam from the turbine driver during a SSE.)

NOTE:
To avoid pump damage due to overheating while operating with no delivered flow, the Motor Driven Auxiliary Feedwater Pumps (MDAFWPs) and the Turbine Driven Auxiliary Feedwater Pump (TDAFWP) require minimum flows of 75 gpm and 120 gpm respectively. To satisfy this requirement, each pump has a recirculation line that joins to common header ALO45DBC-3" and returns to the condensate storage tank (CST). The common recirculation line transitions from safety-related to non-safety related/non-seismic at the Auxiliary Feedwater System to CST pipe chase, becoming line ALO46DBC-3". The CST pipe chase and the CST are not seismically qualified.

If a hazard (i.e. tornadoes, floods, missiles, pipe breaks, fires, and seismic events) resulted in the non-safety related portion of the recirculation header becoming crimped such that recirculation flow was restricted in conjunction with an AFS actuation signal, the potential for pump damage could exist.

To eliminate that potential, an alternate flow path has been designed such that even in the event of a recirculation line obstruction, sufficient cooling flow will be available.

The AFW system is designed to remain functional after a tornado missile impact. As shown on Figures 10.4-10 and 3.6-1, Sheet 49, the exhaust steam from the driver is routed from the auxiliary building wall through the auxiliary boiler building. The portion of the turbine driver exhaust stack that exits the auxiliary building has been analyzed and is not expected to crimp and inhibit the ability of the TDAFWP to deliver design flow rates. The impact from a credible missile will cause the exhaust line to sever by any of the postulated tornado missile scenarios thus not inhibiting the function of the exhaust line.

In the event of the tornado hazard, the capability to safely shutdown is provided by the redundant and physically separated Motor Driven Auxiliary Feedwater Pumps (MDAFWP). In USAR Table 10.4-13 (Sheet 2) the single failure analysis is provided for the TDAFWP, which states two motor driven pumps are provided and either will provide 100% of the feedwater requirements for decay heat removal during plant shutdown. While a single failure is not postulated with a tornado hazard, per USAR Section 3.1.2, USAR Table 10.4-13 contains the licensing basis regarding loss of function for the TDAFWP. Loss of the TDAFWP in a tornado hazard will not prevent safe shutdown of the plant, thus tornado missile protection for the exhaust line is not necessary.

SAFETY EVALUATION TWO - The AFS is designed to remain functional after a SSE. Sections 3.7(B).2 and 3.9(B) provide the design loading conditions that were considered. Sections 3.5 and 3.6 provide the hazards analyses to ensure that a safe shutdown, as outlined in Section 7.4, can be achieved and maintained. For a more complete description of motor qualification, refer to Sections 3.10(B) and 3.11(B).

As shown on Figures 10.4-10 and 3.6-1, Sheet 49, the exhaust steam from the turbine driver is routed from the auxiliary building wall through the auxiliary boiler building, which is designed to UBC seismic requirements and is not expected to fail during a seismic event. If the auxiliary boiler building were to catastrophically fail and the exhaust line were sheared off completely, the AFP turbine would operate properly.

Even if the exhaust line were to crimp significantly, the AFP turbine driven pump would still deliver design flow rates. The back pressure on the turbine may be increased significantly before the required flow rates are not available. The TDAFWP is capable of delivering design flow even with a local constriction of 50 percent of the free area of the exhaust line. This type of failure is not considered to be credible. However, the exhaust line and its support are re-classified as special scope, II/I, to assure they will not be degraded and thus affect the operation of the Auxiliary Feedwater Pump Turbine.

Breaks in seismic Category I piping are not postulated during a seismic event. Thus an MSLB or MFLB inside containment or in the steam tunnel are not postulated following a seismic event and the design of the exhaust line does not enter into the evaluation of these breaks.

For a seismically induced MSLB in the turbine building, various single failures can be postulated, none of which result in adverse conditions even if the AFP turbine is inoperable. If an MSLIV fails to close, one steam generator blows down; however, two motor driven AFW pumps are available to feed three intact steam generators. If one motor driven pump train fails for any reason, the other motor driven pump feeds two steam generators as required. In this case, the break has been isolated by the MSLIV, and all four steam generators are intact.

SAFETY EVALUATION THREE - Complete redundancy is provided and, as indicated by Table 10.4-13, no single failure compromises the system's safety functions. All vital power can be supplied from either onsite or offsite power systems, as described in Chapter 8.0.

The turbine-driven pump is energized by steam drawn from two main steam lines between the containment penetrations and the main steam isolation valves. All valves and controls necessary for the function of the turbine-driven pump are energized by the Class 1E dc power supplies. Turbine bearing lube oil is circulated by an integral shaft-driven pump. Turbine and pump bearing oil is cooled by pumped auxiliary feedwater.

SAFETY EVALUATION FOUR - The AFS is initially tested with the program given in Chapter 14.0. Periodic operational testing is done in accordance with Section 10.4.9.4.

Section 6.6 provides the ASME Boiler and Pressure Vessel Code, Section XI requirements that are appropriate for the AFS.

SAFETY EVALUATION FIVE - Section 3.2 delineates the quality group classification and seismic category applicable to this system and supporting systems. Table 10.4-12 shows that the components meet the design and fabrication codes given in Section 3.2. All the power supplies and control functions necessary for safe function of the AFS are Class 1E, as described in Chapters 7.0 and 8.0.

SAFETY EVALUATION SIX - The AFS provides a means of pumping sufficient feedwater to prevent damage to the reactor following a main feedwater line break inside the containment, or a main steamline break incident, as well as to cool down the reactor coolant system at a rate of 50°F per hour to a temperature of 350°F, at which point the residual heat removal system can operate. Pump capacities, as shown in Table 10.4-12, and start times are such that these objectives are met. Restriction orifices located in the pump discharge lines and automatic flow control valves for the motor-driven pumps limit the flow to the broken loop so that adequate cooldown flow (470 gpm) can be provided to the other steam generators for removal of reactor decay heat and so that containment design pressure is not exceeded. Pump discharge head is sufficient to establish the minimum necessary flowrate against a steam generator pressure corresponding to the lowest pressure setpoint of the main steam safety valves. The maximum time period required to start the electric motors and the steam turbine which drive the auxiliary feedwater pumps is chosen so that sufficient flowrates are established within the required time for primary system protection. Refer to Chapter 15.0.

SAFETY EVALUATION SEVEN - As discussed in Sections 10.4.9.2 and 10.4.9.5 and Chapter 15.0, adequate instrumentation and control capability is provided to permit the plant operator to quickly identify and isolate the auxiliary feedwater flow to a broken secondary side loop. Isolation from nonsafety-related portions of the system, including the condensate storage tank, is provided as described in Section 10.4.9.2.

SAFETY EVALUATION EIGHT - The AFS can be controlled from either the main control room or the auxiliary shutdown panel. Refer to Section 7.4 for the control description.

10.4.9.4 Tests and Inspections

Preoperational testing is described in Chapter 14.0. The performance and structural and leaktight integrity of system components is demonstrated by periodic operation.

The AFS is testable through the full operational sequence that brings the system into operation for reactor shutdown and for DBA, including operation of applicable portions of the protection system and the transfer between normal and standby power sources.

The safety-related components, i.e., pumps, valves, piping, and turbine, are designed and located to permit preservice and inservice inspection.

10.4.9.5 Instrumentation Applications

The AFS instrumentation is designed to facilitate automatic operation and remote control of the system and to provide continuous indication of system parameters.

Redundant condensate storage tank level indication and alarms are provided in the control room. The backup indication and alarms use auxiliary feedwater pump suction pressure by converting it to available tank level. Both alarms provide at least 20 minutes for operator action (e.g., refill the tank), assuming that the largest capacity auxiliary feedwater pump is operating.

Pressure transmitters are provided in the discharge and suction lines of the auxiliary feedwater pumps. Auxiliary feedwater flow to each steam generator is indicated by flow indicators provided in the control room. If the condensate supply from the storage tank fails, the resulting reduction of pressure at the pump suction is indicated in the control room.

Flow transmitters and control valves with remote control stations are provided on the auxiliary feedwater lines to each steam generator to indicate and allow control of flow at the auxiliary shutdown panel and in the control room. Flow controllers for the motor-driven pump control valves position the valves to

limit the flow to a preset value throughout the full range of downstream operating pressures.

Position indication in the control room is provided on the ESFAS status panel for the manual isolation valve in the auxiliary feedwater pump suction header from the condensate storage tank.

A flow element and indicator is provided in each auxiliary feedwater pump minimum recirculation line to facilitate periodic performance testing.

Table 10.4-14 summarizes AFS controls, alarms, indication of status, etc.

10.4.10 SECONDARY LIQUID WASTE SYSTEM

The function of the secondary liquid waste system (SLWS) is to process condensate demineralizer regeneration wastes and potentially radioactive liquid waste collected in the turbine building. Processed liquid waste may be reused in the plant or discharged to the environment.

10.4.10.1 Design Bases

10.4.10.1.1 Safety Design Bases

The SLWS is not a safety-related system, and its failure does not compromise any safety-related system or prevent a safe shutdown of the reactor.

10.4.10.1.2 Power Generation Design Bases

POWER GENERATION DESIGN BASIS ONE - During normal plant operation, the SLWS is utilized to the extent required to meet chemical composition limits for release to the environment or for recyle of processed fluids back to the condenser.

POWER GENERATION DESIGN BASIS TWO - The SLWS processes recyclable turbine building waste during normal operation with the radioactivity levels identified in Appendix 11.1A.

POWER GENERATION DESIGN BASIS THREE - During abnormal operation, the SLWS has provisions to receive from nonradioactive turbine building sumps liquids that may be radioactively contaminated. This condition could occur if, for example, condensation from the turbine building air coolers contained radioactive contamination or if during maintenance a major component's normal drainage path was not available.

POWER GENERATION DESIGN BASIS FOUR - The SLWS processes condensate demineralizer regeneration waste products for recycle back to the condenser or discharge to the environment. The SLWS is designed to accept and process condensate demineralizer regeneration wastes resulting from the regeneration of one demineralizer vessel every 2 days.

POWER GENERATION DESIGN BASIS FIVE -

The SLWS includes cross-connections with the steam generator blowdown system to provide improved reliability by providing back-up demineralization capability.

10.4.10.2 System Description

10.4.10.2.1 General Description

The SLWS consists of several tanks and pumps, a demineralizer, a charcoal adsorber, an oil interceptor, and three filters, as shown in Figure 10.4-12.

Turbine building wastes consist of wastes collected in turbine building floor and equipment drains and condensate demineralizer regeneration wastes. The turbine building drains are segregated into two categories. The first category consists of drains which could include potentially radioactive turbine cycle leakage. The other category consists of nonradioactive sources.

The potentially radioactive turbine building drains are collected, as described in Section 9.3.3, in specific sumps throughout the turbine building and sent to the SLW drain collector tanks for processing. Drain processing is based on operator knowledge of secondary system chemistry and radioactive contamination, in conjunction with Technical Specification limitations and state and local discharge permit restrictions. In all cases, the waste is processed through an oil interceptor to remove oil which might be present in the sumps. In addition, the waste may be processed by filtration, and/or demineralization. The nonradioactive waste is normally discharged without processing (except for oil removal) through the oily waste system. However, provisions exist to monitor the radioactivity of the nonradioactive waste and to divert it to be processed if necessary. All discharges from the standard power block are monitored for radioactivity levels, and the discharge is automatically terminated if the activity is above permissible levels or dilution flow rate is insufficient. The discharge from the SLWS oil interceptor pumps can be routed to either the low or high total dissolved solids (TDS) collection tanks. The routing of turbine effluents can be used to provide adequate dilution for pH neutralization for discharge to the environment without using contaminated lines.

The condensate demineralizer regeneration waste is divided into two types -- high and low total dissolved solids (TDS).

High TDS waste results from the acid and caustic rinses used when chemically regenerating spent resins. Low TDS waste results from the initial backflushing of unregenerated resin and the final rinsing of the regenerated resin to remove the acid and caustic. These high and low TDS wastes are collected separately in two high and two low TDS collector tanks.

These input streams are retained within the appropriate collection tanks and then processed by various combinations of filtration, crud sedimentation, charcoal adsorption, and demineralization. The processed SLW liquids can then

be collected in either or both of the two SLW monitor tanks, sampled and returned to the condenser, or discharged. The monitor tanks provide holdup and isolation in conjunction with sampling to ensure that the chemical and radioactivity limits for discharge or recycle are met.

The SLW drain collector tanks are sized based on 10,000 gpd of leakage in all areas of the turbine building. Since the SLWS normally receives only 7,200 gpd from these drains, the 15,000 gallon SLW drain collector tanks can each receive drainage for at least 2 days. This delay provides the surge capacity to facilitate repair, maintenance, or inspection that may be required on the process equipment or abnormal usage demands which may be made of the SLWS. The SLW drain collector tank pumps are cross-connected to take suction from either tank. A recirculation line from the pumps' discharge to either tank is provided to allow the tank contents to be mixed so that accurate sampling can be accomplished. The SLW drain collector tank contents are then processed and sent to the SLW monitor tanks. The SLW monitor tanks have the same design features, including two pumps, as the SLW drain collector tanks.

After being sampled in the SLW monitor tanks, the processed water is either returned to the condenser or discharged. The distribution header connection for the laundry water storage tank is for makeup to the recyclable laundry system. This makeup is necessary to replenish the water lost in the laundry's dryer.

In addition, the floor drain system described in Section 9.3.3 provides leakage detection capabilities to assure that any abnormal leakage is detected and repaired.

10.4.10.2.2 Component Description

Codes and standards applicable to the SLWS are listed in Table 3.2-1. Major components are described in Table 10.4-15.

10.4.10.2.3 System Operation

Turbine Building Recyclable Drains

The turbine building recyclable drains are collected in drain sumps throughout the turbine building. These sumps are normally

aligned to discharge, via the sump pumps, to the secondary liquid waste (SLW) oil interceptor. After passing through the oil interceptor, the de-oiled water is pumped, via the SLW oil interceptor transfer pumps, to the SLW drain collector tanks. Two drain collector tanks are provided so that one is available for accepting wastes while the other is being sampled or processed.

Prior to processing the SLW drain collector tank contents, a sample is taken to determine the optimum means of processing. The options available are:

a. Filtration

b. Charcoal adsorption

c. Demineralization

or any combination of these options. Two SLW drain collector tank pumps are available to pump the drain fluids to the radwaste building for processing. The operator selects the appropriate tank/pump combination, starts the pump, and, when ready, opens an air-operated valve located at the discharge of the drain collector tank pumps. The drain fluid is first passed through a wye strainer to remove all gross particulates, then it is passed through a cartridge filter to remove particulates in the 30-micron range. This scheme (strainer/filter) maximizes filter cartridge life. A bypass is provided around the strainer and/or filter combination. The wye strainer is provided with a local blow-off connection for ease of cleaning.

Processed water from the liquid Waste Process Skid is typically directed to the Secondary Liquid Waste (SLW) Monitor Tanks. The SLW charcoal absorber and SLW demineralizers are optional for removing trace organics and dissolved solids. These components are typically bypassed. The charcoal absorber and the demineralizer have wye strainers at their discharge to remove charcoal and resin fines. The blowdown ports of these wye strainers are directed to the secondary spent resin storage tank to minimize waste handling.

Secondary Liquid Waste Monitoring and Discharge

The processed water, is sampled and monitored while being recirculated in the SLW monitor tanks. Two monitor tanks are provided so that one is available for accepting water while the other is being sampled and discharged. The water in the monitor tanks is sampled to assure that the proper chemistry exists for discharge to the environment at the operator's option.

If the operator decides to discharge to the environment, a radiation monitor is provided to isolate the discharge line on high radiation. In addition, the discharge line is also isolated by a low dilution flow signal.

If, for any reason, the SLW monitor tank water does not meet the necessary chemical requirements for discharge or recycle, the water may be reprocessed through liquid radwaste demineralizer skid.

Condensate Demineralizer Regenerant Wastes

The condensate demineralizer system and the regeneration process are described in Section 10.4.6.

High Total Dissolved Solids (TDS) Wastes

High TDS wastes are wastes that result from the acid and caustic rinses used to regenerate condensate demineralizer resins. These wastes (though high in dissolved solids) are generally low in crud content. These wastes flow by gravity from the demineralizer regeneration system to the high TDS transfer tank located in the condenser pit of the turbine building. These waste fluids are then pumped by either or both of the high TDS transfer tank pumps to the high TDS collector tanks.

Two high TDS collector tanks are provided to accept the wastes. Mixers are provided on the high TDS collector tanks to effectively mix the tank contents to obtain an accurate sample. After sampling the tank contents, the operator adds any necessary chemicals to adjust the pH. The chemical storage tanks and metering pumps are provided as part of the condensate demineralizer regeneration system. This step is normally not required as the condensate demineralizer regeneration system should control the outlet fluids to an acceptable pH range for processing in the SLW equipment. After pH adjustment, the mixers continue to operate to again ensure even distribution of tank contents. The operator next chooses the proper tank and pump combination (using the high TDS collector tank pumps) and starts the pump to prepare for discharge to either the liquid radwaste system or the wastewater treatment system. If the operator chooses to discharge to the wastewater treatment system, the tank contents shall be sampled to ensure the wastes have a pH greater than 2 and lessthan 12.5; thus ensuring that they are not classified as hazardous wastes. The operator must manually isolate the path to the radwaste building prior to aligning the pumps and tanks for discharge. The wastewater treatment system radioactivity monitor 1-HF-RE-95, monitors both the high and low TDS wastewaters prior to discharge to the wastewater treatment facility/system. The monitor monitors the wastewater treatment system influent discharge line upstream of the isolation valve. The high radioactivity alarm shall close the isolation valve to prevent the discharge of radioactive fluid to the wastewater treatment system. If the high TDS wastes were to become radioactive they shall be processed through the radwaste building.

Low Total Dissolved Solids (TDS) Wastes

Low TDS wastes are wastes that result from the resin washing, flushing, and sluicing operations that are a part of the condensate demineralizer regeneration process. These wastes (though low in dissolved solids) are relatively high in crud content. These wastes flow by gravity from the demineralizer regeneration system to the low TDS transfer tank in the condenser pit of the turbine building. These waste fluids are then pumped by either or both low TDS transfer tank pumps to the two low TDS collector tanks. These tanks are designed to promote settling of crud and are provided with a nozzle to drain off the settled crud.

Two low TDS collector tank pumps are provided for pumping the waste to processing equipment. If insufficient time has been allowed for clarification of the waste, the low TDS collector tanks can be processed through a local bag filter and returned to the collector tanks. When the operator is ready to process the low TDS collector tanks, he selects the proper tank/pump combination, starts the pump, and, when ready to initiate processing, opens an air-operated valve located at the discharge of the low TDS collector tank pumps.

The waste then flows to the radwaste building where it passes through a wye strainer and one of two low TDS filters. This strainer/filter combination extends filter cartridge life by removing all large particulates prior to the filters. The waste next flows to the SLW demineralizer, and processing is completed as described previously.

If the SLW demineralizer is not available and the plant can be operated at one-half the maximum steam generator blowdown rate, the option exists to process the low TDS wastes via two of the steam generator blowdown demineralizers.

If the operator chooses to discharge the low TDS wastes through the wastewater treatment system, the operator must isolate the flowpath to the radwaste building. The contents of the low TDS waste collector tank shall be sampled to ensure that the pH is between 2 and 12.5. The operator then chooses the proper tank and pump combination, starts the pump and begins discharge to the wastewater treatment system. The discharge line to the wastewater treatment facility is monitored by radioactivity monitor 1-HF-RE-95. The high radioactivity monitor shall close the isolation valve downstream of the monitor on a high radioactivity alarm to prevent discharge to the wastewater treatment facility.

Abnormal Operation

If abnormally large amounts of nonradioactively contaminated drainage collect in the turbine building recyclable sumps, such as a fire deluge, then the SLW system can be bypassed completely and the water discharged via the oily waste discharge pipe.

System Releases

Liquid effluents from the SLWS may be recycled to the secondary system via the condenser or may be discharged to the environment.

Prior to discharge to the environment, the effluent is isolated within the appropriate monitor tank. The tank contents are recirculated to assure that they are well mixed and then sampled to assure that the release would not exceed release limits. The discharge to the environment passes through a process radiation monitor, which automatically closes the discharge valve on high radioactivity. The method of processing secondary liquid wastes and whether to recycle or discharge the processed wastes depend on the radioactivity concentrations. The radioactivity content of the SLWS releases is limited, along with radioactivity in other liquid releases, so as not to exceed Offsite Dose Calculation Manual.

The radioactivity releases provided in Section 11.1 and Appendix 11.1.A are based on the analytical models of the GALE code and do not reflect the normal variations in the concentrations of radioactive isotopes in the secondary system which depend on the status of the fuel, primary-to-secondary leakage, operation of the steam generator blowdown system, and extent of removal of radioisotopes from secondary steam to the MSR and high pressure heater drains (which are recycled directly to the steam generators).

It is estimated that the annual liquid volume released from the SLWS will be approximately 2,100,000 gallons (7,200 gallons per day with an 80-percent plant capacity factor). As described above, the releases would be on a batch basis from the SLW monitor tank. The discharge rate is 90 gpm (80 minutes per day) and the temperature less than 135°F.

10.4.10.3 Safety Evaluation

The secondary liquid waste system is not a safety-related system.

10.4.10.4 Tests and Inspections

Preoperational testing is performed as described in Chapter 14.0.

Continuous operation demonstrates the operability, performance, and structural and leaktight integrity of all system components.

10.4.10.5 Instrumentation Applications

The SLWS instrumentation is designed to facilitate automatic operation, remote control, and continuous indication of system parameters, as described in 10.4.10.2.3.

TABLE 10.4-1

CONDENSER DESIGN DATA (Note 1)

Item			
Type	Multipressure, 3-shell		
Design duty, Btu/hr-total 3 shells	7.8696×10^9		
Shell pressure w/80°F circ. water, inches Hga	2.34/2.89/3.64		
Waterbox circulating flow, gpm	500,000 (Site A/E design value)		
Tubeside temperature rise, °F	31.5		
Design pressure-shell	Full vacuum to 15 psig		
Hotwell storage capacity - total 3 shells, gallons	159,000		
Design pressure-channel, psig	70 and full vacuum		
Number of tubes	59,796		
Tube material			
Main bundle	304 S.S.		
Air cooler	304 S.S.		
Impingement area	304 S.S.		
Surface area, sq. ft.	900,000		
Overall Shell dimensions, feet	LP	IP	HP
Length	29	29	29
Width	39	45	51
Height	78	78	78
Number of tube passes	1		
Steam flow, 1b/hr			
Normal	7,940,886		
Maximum	8,270,751		
Circulating Water Temp, °F			
Design	80		
Maximum	90		
Steam temperature, °F			
Normal (avg.)	114		
Maximum (without turbine bypass)	134		
Maximum (with turbine bypass)	141		

TABLE 10.4-1 (Sheet 2)

Applicable codes and standards:	ASME Sect. VIII, Div. 1, ANSI Standards, HEI Standards for Steam Surface Condensers
Effluent oxygen content, ppb	7

Notes:

1. The data in this table reflects the original engineering specification for the condenser. The data may not reflect actual operating values.

TABLE 10.4-2

MAIN CONDENSER AIR REMOVAL SYSTEM
DESIGN DATA

Component Description

Condenser Mechanical Vacuum Pumps

Quantity	3
Type	Rotary water ring
Holding capacity	35 SCFM @ 1" Hga
Hogging capacity	72 SCFM @ 5" Hga
Speed	435 rpm
Cooling water flow	630 gpm

Motor Data

Horsepower	150
Speed	1,800 rpm
Electrical requirements	460 Volt, 60 Hz, 3

Seal Water Coolers

Quantity	3
Type	Straight tube
Heat exchanged	14,600 Btu/hr

	Shell Side	Tube Side
Fluid	Seal water	Service water
Total fluid entering	90 gpm	630 gpm
Design pressure, psig	150	250
Design temperature, F	300	300
Test pressure, psig	225	375

Piping and Valves

Material	Carbon steel
Design temperature, F	175
Design pressure, psig	225

Charcoal bed adsorber and filters are described in Section 9.4.4.

TABLE 10.4-3

CIRCULATING WATER SYSTEM
COMPONENT DESCRIPTION

Circulating Water Pumps	
Quantity	3
Type	Vertical, wet-pit
Capacity, each (gpm)	166,700
Total developed head at normal operating level, approx (ft)	74
Circulating Water Piping (Power Block, above floor)	
Material	Carbon steel
Outside diameter, in.	120
Type of interface connection	Flanged
Code (pipe)	AWWA-C201
Code (flange)	AWWA-C207, Class D
Design pressure, psig	70 at water boxes
Site interface	None
Circulating Water Piping (Power Block, below floor)	
Material	Cast-in-place concrete
Inside dimension, in.	120 inches square
Type of interface connection	Flanged
Code (pipe)	ACI
Code (flange)	AWWA-C207, Class D
Design pressure, psig	85 at El. 1,970
Site interface	Welded joint
Circulating Water Expansion Joints	
Type	Rubber
Design pressure, psig	70
Design temperature, °F	125
Circulating Water Valves	
Type	Butterfly
Operator	Electric motor
Design pressure, psig	70
Design temperature, °F	125
Code	AWWA

TABLE 10.4-3 (Sheet 2)

Water Box Venting Pumps	
Quantity	3
Type	Rotary
Capacity, acfm (each pump)	775
Suction pressure, inches Hg. abs	5
Motor Horsepower	50
Speed, rpm	690
Design code	MS
Water Box Venting Tank	
Quantity	1
Capacity, gal	700
Design pressure, min/max psig	Full vacuum/15
Design temperature, °F	150
Design code	ASME Section VIII
Venting System Seal Tank	
Quantity	1
Capacity, gal	53
Design pressure, psig	15
Design temperature, °F	150
Design code	ASME Section VIII
Condenser Drain Pump	
Quantity	1
Type	Centrifugal
Capacity, gpm	900
Total head, feet	88
Motor horsepower	30
Design code	MS
Cooling Lake	
Type	Man-made
Normal operating level (ft, MSL)	1,087
Capacity (acre-ft)	111,280
Nominal surface area (acres) at normal operating level	5,090

TABLE 10.4-4

CONDENSATE DEMINERALIZER SYSTEM DESIGN DATA

Demineralizer Vessels	
Quantity	6
Design pressure, psig	700
Design temperature, °F	140
Design flow per vessel, gpm	4,560
Diameter (I.D.)	10'-6"
Type	Spherical-rubber lined
Regeneration Equipment	
Cation regeneration tank	
Quantity	1
Design pressure, psig	75
Design temperature, °F	140
Diameter	7'-6"
Height	13'-6"
Type	Vertical cylindrical-rubber lined
Anion regeneration tank	
Quantity	1
Design pressure, psig	75
Design temperature, °F	140
Diameter	6'-6"
Height	11'-0"
Type	Vertical cylindrical-rubber lined
Resin mixing and storage tank	
Quantity	1
Design pressure, psig	75
Design temperature, °F	140
Diameter	7'-6"
Height	10'-6"
Type	Vertical cylindrical-rubber lined

TABLE 10.4-4 (Sheet 2)

Acid day tank

Quantity	1
Design pressure	Atm.
Design temperature, F	100
Diameter	3'-6"
Height	6'-0"
Type	Vertical cylindrical-lined - High Bake Phenolic

Caustic day tank

Quantity	1
Design pressure	Atm.
Design temperature, F	100
Diameter	4'-0"
Height	4'-6"
Type	Vertical cylindrical-unlined

Sluice water pump

Quantity	2 (one standby)
Type	Centrifugal-inline
Capacity, gpm	320
Head, ft	127

Acid metering pump

Quantity	1
Type	Centrifugal
Capacity, gph	2220
Differential pressure, psi	28

Caustic metering pump

Quantity	2 (one standby)
Type	Positive displacment
Capacity, gph	280
Differential pressure, psi	65

Waste collection tank

Quantity	1
Design pressure	Atm.
Design temperature, F	140
Diameter	3'-6"
Height	5'-0"
Special feature	Mounted in strainer

TABLE 10.4-4 (Sheet 3)

Resin addition hopper

Quantity	1
Diameter	2’-0"
Height	2’-0"
Capacity, ft3	7
Design pressure	Atm.
Design temperature	Amb.
Special feature	Filling by eductor

TABLE 10.4-5

CONDENSATE AND FEEDWATER SYSTEM COMPONENT FAILURE ANALYSIS

Component	Failure Effect On Train	Failure Effect on System	Failure Effect on RCS
Condensate pump	None. Condenser hotwells are interconnected.	Operation continues at full capacity, using parallel pumps (condensate pump runout capacity is 50 percent).	None
No. 1, 2, 3, or 4 feedwater heater	One train of No. 1, 2, 3, and 4 feedwater heaters is shut down. Remaining trains continue to operate.	Operation continues at reduced capacity, using parallel feedwater heaters. Load must not exceed that which is required to protect the Turbines from excessive exhaust flow.	None. No. 5 feedwater heater is designed to maintain normal outlet feedwater temperature under this condition.
Heater drain tank	Extraction steam to both No. 5 feedwater heaters must be isolated. Drains from Nos. 6 and 7 feedwater heaters are dumped to condenser.	Operation continues at reduced capacity.	Reactor control system reduces reactor power to compensate for reduced feedwater temperature.
Heater drain pump	None. Parallel pump with condensate pumps have sufficient capacity to handle full load.	50 percent of HP feedwater heater drains are dumped to condenser.	Reactor control system reduces reactor power to compensate for reduced feedwater temperature.
Steam generator feedwater pump	None. Two parallel trains are interconnected.	Operations may continue at reduced capacity, using parallel pump if the reactor does not trip. Steam generator feedwater pump runout capacity is 67 percent.	Reactor control system reduces reactor power to compensate for reduced feedwater flow.
No. 5, 6, or 7 feedwater heater	One train is shut down.	Operation continues at reduced capacity, using parallel feedwater heaters. Load must not exceed that which is required to protect the Turbines from excessive exhaust flow.	Reactor control system reduces reactor and generator output power to compensate for reduced feedwater temperature.

TABLE 10.4-6

CONDENSATE AND FEEDWATER SYSTEM DESIGN DATA

Main Feedwater Piping (Safety-Related Portion)

Power Rerate Flowrate, lb/hr	16,082,021
Design (VWO) flowrate, lb/hr	15,850,801
Number of lines	4
Nominal size, in.	14
Schedule	80
Design pressure, psig	1,185
Design temperature, F	450
Design code	ASME Section III, Class 2
Seismic design	Category I

Feedwater Isolation Valves

Number per main feedwater line	1
Closing time, sec	5 (at normal operating conditions prior to receiving isolation signal)
Body design pressure, psig	1,950
Design temperature, F	450
Design code	ASME Section III, Class 2
Seismic design	Category I

Feedwater Control Valves

Number per main feedwater line	1
Closing time, sec	5
Design code	ASME Section III, Class 3
Seismic design	None

TABLE 10.4-7

FEEDWATER ISOLATION SINGLE FAILURE ANALYSIS

Component	Failure	Comments
Main feedwater control valve (MFCV) (1)	Valve fails to close upon receipt of automatic signal (FIS)	MFIV will close, providing adequate isolation to limit high energy fluid addition
	Loss of power from one power supply	Valve fails closed upon loss of either train of power
Main feedwater bypass control valve. MFBCV (1)	Same as main feedwater control valve	Same as main feedwater control valve
Main feedwater isolation valve (MFIV)	Valve fails to close upon receipt of automatic signal (FIS)	MF control valve and MF check valve close as required to isolate
		The MF control valve (and bypass control valve) serve to limit the addition of high energy fluid into the containment following a main feedwater line rupture inside the containment or a main steam line break
	Loss of power from one power supply	Valve fails closed upon loss of either train of power
Main feedwater check valve	Valve fails to close	MFIV will close, providing adequate isolation

(1) Valve is only required following pipe rupture of feedwater line inside containment or following a MSLB.

TABLE 10.4-7 (Sheet 2)

Component	Failure	Comments
Chemical addition isolation valve	Valve fails to close upon receipt of automatic signal (FIS)	Associated check valve will close, providing adequate isolation
	Loss of power for valve operation	Valve fails closed
Chemical addition check valve	Valve fails to close	Chemical addition isolation valve will close, providing adequate isolation
Auxiliary feedwater check valve	Valve fails to open properly	Remaining two intact steam generators will provide adequate auxiliary feedwater
Steam generator narrow range level (Four per steam generator)	No signal generated for protection logic from one transmitter	2-out-of 4 logic reverts to 2-out-of 3 logic, and protection logic is generated by other channel devices
	Loss of one of four logic channels	2-out-of 4 logic reverts to 2-out-of 3 logic, and protection logic is generated by other channel devices

TABLE 10.4-8

MAIN FEEDWATER SYSTEM
CONTROL, INDICATING, AND ALARM DEVICES

Device	Control Room Indication/Control	Local	Control Room Alarm
Flow rate (1)	Yes	No	Yes (1)
Steam generator level (narrow range) (2)	Yes	No	Yes
Steam generator level (wide range)	Yes	No	No
Feedpump Speed	Yes	No	Yes

(1) Steam flow - Feedwater flow mismatch

(2) Four per steam generator - Involved in 2-out-of-4 logic to generate input to reactor trip, auxiliary feed pump start, turbine trip, and feedwater isolation signals.

TABLE 10.4-9

STEAM GENERATOR BLOWDOWN SYSTEM
MAJOR COMPONENT PARAMETERS

Steam Generator Blowdown Discharge Pump

Type	Inline centrifugal
Number	2
Design temperature, F	200
Design pressure, psig	150
Process fluid	Blowdown
Design flow, gpm	270
Discharge head, ft	290
Code	Manufacturer's standard
Material	Stainless steel

Steam Generator Blowdown Regenerative Heat Exchanger

Type	Two stacked, BFU, two pass shell/two pass U-tube
Installation	Horizontal
Number	1
Eff. heat transfer area, ft^2	1,090
Fluid	
Tube	Blowdown fluid
Shell	Condensate fluid
Design flow	
Tube, lb/hr	140,000
Shell, lb/hr	200,000
Design temperature, F	
Shell side	400
Tube side	600
Design pressure, psig	
Shell side	700
Tube side	300
Design codes	TEMA R and ASME Section VIII Div I
Materials	
Tube	Stainless steel
Tubesheet	Stainless steel
Shell	Carbon steel
Channel	Carbon steel

TABLE 10.4-9 (Sheet 2)

Steam Generator Blowdown Surge Tank

Type	Vertical cylindrical
Number	1
Capacity, gallons	2,065
Tank diameter, in.	78
Design pressure, psig	0.5
Design temperature, F	175
Material	Carbon steel
Code	ASME Section VIII, Div. I

Steam Generator Blowdown Mixed-Bed Demineralizer

Type	Flushable
Number	4
Design temperature, F	200
Design pressure, psig	300
Design pressure drop (fouled condition), psi	20 @ 200 gpm
Shell diameter, in.	60
Design flow, gpm	150
Decontamination factors	
Cation (a)	100
Anion	100
Cs, Rb	2
Resin volume, ft^3	75
Material	Stainless steel
Code	ASME Section VIII, Div. I

(a) Does not include Cs, Mo, Y, Rb, Te

Steam Generator Blowdown Filter (FBM03A & 03B)*

Type	Disposable cartridge
Number	2
Design pressure, psig	300
Design temperature, F	250
Design flow, gpm	250
Pressure drop (250 gpm, clean), psi	5
Pressure drop (fouled condition), psi	20
Particle retention	98% (min) of 30 micron size (max)*
Material (vessel)	Stainless steel
Code	ASME Section VIII, Div. I

*Standard filter cartridges are available with variable particle retention characteristics, and the selection of the filter cartridge is based on operating data.

TABLE 10.4-9 (Sheet 3)

Steam Generator Drain Pump

Type	Inline centrifugal
Number	2
Rated flow, gpm	100
Rated total dynamic head, ft	372
Design pressure, psig	150
Design temperature, F	150
Design code	Manufacturer's standard
Material	Stainless steel

Steam Generator Blowdown Nonregenerative Heat Exchanger

Type	BFU two pass shell 4 pass-tube
Installation	Horizontal
Number	1
Eff. heat transfer area, ft^2	682.5
Flow, continuous max., gpm	270
Fluid	
Shell side	Service water
Tube side	Blowdown fluid
Design temperature, F	
Shell side	150
Tube side	600
Design pressure, psig	
Shell side	200
Tube side	300
Design code	ASME Section VIII Div. I, TEMA-R
Materials	
Tube	Stainless steel
Shell	Carbon steel
Tubesheet	Stainless Steel
Channel	Carbon steel

Steam Generator Blowdown Flash Tank

Type	Vertical
Number	1
Volume, gallons	2,350
Vessel diameter, in.	72
Design temperature, F	425
Design pressure, psig	300
Material	Stainless steel
Code	ASME Section VIII, Div. I

* If greater than 5% of the tubes have been plugged heat transfer value will be less than this value.

TABLE 10.4-10

STEAM GENERATOR BLOWDOWN SYSTEM
SINGLE ACTIVE FAILURE ANALYSIS

Component	Failure	Comments
Blowdown isolation valves	Loss of power from one power supply	Redundant power supply provided
	Valve fails to close upon receipt of automatic signal (SLIS)	Closure of three out of four isolation valves adequate to meet safety requirements (Refer to Section 10.4.8.2.2)
Sample isolation valves	Loss of power from one power supply	Valves fail closed upon loss of power
	Valve fails to close upon receipt of automatic signal	Closure of three out of four isolation valves adequate to meet safety requirements

TABLE 10.4-11

STEAM GENERATOR BLOWDOWN SYSTEM
CONTROL, INDICATING AND ALARM DEVICES

Device	Radwaste Building Control Room Control/Indication	Main Control Room Indication	Main Control Room Alarm
Blowdown flash tank level	X		X (1)
Blowdown flash tank pressure	X		
Surge tank level	X		X (1)
Blowdown flow	X	X	
Blowdown liquid high temperature	X		X (1)
Blowdown liquid radiation monitor	X (alarm)	X	X
Surge tank discharge radiation monitor	X (alarm)	X	X
Blowdown conductivity monitor	X		X (1)

(1) Common alarm window on main control board.

X denotes that indicating device is provided.

TABLE 10.4-12

AUXILIARY FEEDWATER SYSTEM COMPONENT DATA

Motor-Driven Auxiliary Feedwater Pump (per pump)

Quantity	2
Type	Horizontal centrifugal, multistage, split case with packing
Capacity, gpm (each)	575
TDH, ft	3,200
NPSH required, ft	17
NPSH available, ft (min)	28
Material	
Case	Alloy steel
Impellers	Stainless steel
Shaft	Stainless steel
Design code	ASME Section III, Class 3
Seismic design	Category I
Driver	
Type	Electric motor
Horsepower, hp	800
Rpm	3,600
Power supply	4, 160 V, 60 Hz, 3-phase Class 1E
Design code	NEMA
Seismic design	Category I

Turbine-Driven Auxiliary Feedwater Pump

Quantity	1
Type	Horizontal centrifugal, multistage, split case with packing
Capacity, gpm	1,145
TDH, ft	3,450
NPSH required, ft	17
NPSH available ft (min)	27
Material	
Case	Alloy steel
Impellers	Stainless steel
Shaft	Stainless steel

TABLE 10.4-12 (Sheet 2)

Design code	ASME Section III, Class 3
Driver	
Type	Noncondensing, single stage, mechanical-drive steam turbine
Rpm	3,850
Horsepower, hp	1,590
Design code	NEMA
Seismic design	Category I

Motor-Driven Pump Control Valves

Quantity	4 (2 per pump)
Type	Motor-operated globe valve
Size, in.	4
CV	50
Design pressure, psig	1,800
Design temperature, F	150
Material	Carbon steel
Design Code	ASME Section III
Seismic Design	Category I

Turbine-Driven Pump Control Valves

Quantity	4
Type	Air-operated globe valve
Size, in.	4
CV	50
Design pressure, psig	2,000
Design temperature, F	150
Material	Carbon steel
Design Code	ASME Section III
Seismic Design	Category I

Turbine Driven Auxiliary Feedwater Pump Standby Water Accumulator Tanks

Quantity	3
Type	Cylindrical with dished heads
Capacity	300 gallons
Manufacturer	Joseph Oat Corporation
Seismic Category	1
Weight	2500 lbs.
Design Code	ASME Section III, Class 3

TABLE 10.4-13

AUXILIARY FEEDWATER SYSTEM
SINGLE ACTIVE FAILURE ANALYSIS

Component	Failure	Comments
Suction isolation valves from CST	In the event that the CST is unavailable, valve fails to close upon receipt of automatic isolation signal or loss of power	Redundant nonreturn check valve is provided, and sufficient ESW flow is provided to the auxiliary feedwater pumps.
Suction isolation valves from ESW	In the event that the CST is unavailable, valve fails to open upon receipt of automatic signal or loss of power	Two 100-percent redundant backup ESW trains are provided. Operation of one train of the suction valves meet the requirements.
Suction header pressure transmitters	Loss of one transmitter. No protection logic generated	2-out-of-3 logic reverts to 1-out-of-2 logic, and protection logic is generated by other devices.
Motor-driven auxiliary feedwater pump	Fails to start on automatic signal	Two motor-driven pumps are provided. One pump is sufficient to meet decay heat removal requirements. If due to a main steam or feedwater line break, the operating motor-driven pump cannot supply two intact steam generators, the turbine-driven pump will supply feedwater to meet decay heat removal requirements.
Turbine-driven pump steam supply valve from main steam header	Fails to open on automatic signal	Parallel connections are provided on two main steam lines. One of the two valves will supply 100 percent of the turbine steam requirements.

TABLE 10.4-13 (Sheet 2)

Component	Failure	Comments
Turbine-driven pump	Failure resulting in loss of function	Two motor-driven pumps are provided. Either will provide 100 percent of the feedwater requirements for decay heat removal during plant normal cooldown.
Motor-driven pump control valve	Failure resulting in loss of flow or loss of flow control	The second motor-driven pump will provide 100 percent of the required flow through separate control valves. If due to a main steam or feedwater line break, the operational motor-driven pump train cannot supply two intact steam generators, the turbine-driven pump will supply feedwater to meet decay heat removal requirements.
	Failure to close valve in line feeding broken loop	Second motor-driven pump will provide 100 percent required flow through separate control valves.
Turbine-driven pump control valve	Failure resulting in loss of flow or loss of flow control	Either of the two motor-driven pumps will supply 100 percent of the required feedwater flow through separate control valves.
	Failure to close valve inline feeding broken loop	Either of the two motor-driven pumps will supply 100 percent required flow through separate control valves.

TABLE 10.4-13 (Sheet 3)

Non-return check valve ALV0001	Fails to close	Redundant non-return check valve (ALV0161) and air release vacuum breaker check valve (ALV0167) are provided. ALV0161 is considered passive for a "loss of offsite power with a concurrent loss of the CST" event because the valve is normally closed by gravity and is not required to have discernable mechanical motion. AV0167 is considered active for this event and passive for all other events. The design of the valve requires water flow to raise the float to stop the flow. The float is normally in the neutral position so air can flow in response to system conditions. The valve is mounted above the overflow of the CST. Water will be below the valve inlet. The float is considered passive for all other events.

TABLE 10.4-13A

DESIGN COMPARISONS TO RECOMMENDATIONS OF STANDARD REVIEW PLAN 10.4.9 REVISION 1, "AUXILIARY FEEDWATER SYSTEM (PWR)" AND BRANCH TECHNICAL POSITION ASB 10-1 REVISION 1, "DESIGN GUIDELINES FOR AUXILIARY FEEDWATER SYSTEM PUMP DRIVE AND POWER SUPPLY DIVERSITY FOR PRESSURIZED WATER REACTOR PLANTS"

I. SRP 10.4.9 RECOMMENDATION	WCGS POSITION
ACCEPTANCE CRITERIA:	
General Design Criterion 2, as related to structures housing the system and the system itself being capable of withstanding the effects of natural phenomena such as earthquakes, tornadoes, hurricanes, and floods.	Complies. The system is located in a seismic Category I structure that is tornado, missile, and flood protected. Refer to Section 3.1.3.
General Design Criterion 4, with respect to structures housing the system and the system itself being capable of withstanding the effects of external missiles and internally generated missiles, pipe whip, and jet impingement forces associated with pipe breaks.	Complies. The system components are located in individual rooms that will withstand the effects of flooding, missiles, pipe whip, and jet impingement forces associated with pipe breaks. Refer to Section 3.1.3 and Figure 1.2-11.
General Design Criterion 5, as related to the capability of shared systems and components important to safety to perform required safety functions.	Complies. There is no sharing between units of auxiliary feedwater systems or components. Refer to Section 3.1.3.
General Design Criterion 19, as related to the design capability of system instrumentation and controls for prompt hot shutdown of the reactor and potential capability for subsequent cold shutdown.	Complies. The system can be controlled from either the main control room or the auxiliary shutdown panel as a redundant means of feedwater control. Refer to Section 3.1.3.

TABLE 10.4-13A (Sheet 2)

I. SRP 10.4.9 RECOMMENDATION (Cont.)	WCGS POSITION (Cont.)
General Design Criterion 44, to assure:	
a. The capability to transfer heat loads from the reactor system to a heat sink under both normal operating and accident conditions.	Complies. Redundancy, leak detection, systems interconnection, and isolation capability are incorporated in the system design to assure the required safety function, assuming a single failure with either onsite or offsite power. Refer to Section 3.1.3.
b. Redundancy of components so that under accident conditions the safety function can be performed assuming a single active component failure. (This may be coincident with the loss of offsite power for certain events.)	
c. The capability to isolate components, subsystems, or piping if required so that the system safety function is maintained.	
General Design Criterion 45, as related to design provisions made to permit periodic in-service inspection of system components and equipment.	Complies. Provisions are made to allow in-service inspection. Refer to Section 3.1.3.
General Design Criterion 46, as related to design provisions made to permit appropriate functional testing of the system and components to assure structural integrity and leak tightness, operability and performance of active components, and capability of the integrated system to function as intended during normal, shutdown, and accident conditions.	Complies. The system is designed so that active components are capable of being tested during plant operation. Refer to Chapter 14 and Sections 10.4.9.4 and 3.1.3.

TABLE 10.4-13A (Sheet 3)

I. SRP 10.4.9 RECOMMENDATION (Cont.)	WCGS POSITION (Cont.)
Regulatory Guide 1.26, as related to the quality group classification of system components.	Complies. Refer to Table 3.2-4.
Regulatory Guide 1.29, as related to the seismic design classification of system components.	Complies. Refer to Table 3.2-3.
Regulatory Guide 1.62, as related to design provisions made for manual initiation of each protective action.	Complies. Refer to Table 7.1-5.
Regulatory Guide 1.102, as related to the protection of structures, systems, and components important to safety from the effects of flooding.	Complies. Refer to Section 3.4.
Regulatory Guide 1.117, as related to the protection of structures, systems, and components important to safety from the effects of tornado missiles.	Complies. Refer to Section 3.3.
Branch Technical Positions ASB 3-1 and MEB 3 1, as related to breaks in high and moderate energy piping systems outside containment.	Complies. Refer to Table 3.6-2.

TABLE 10.4-13A (Sheet 4)

II. BTP ASB 10-1 RECOMMENDATION	WCGS POSITION
ACCEPTANCE CRITERIA:	
1. The auxiliary feedwater system should consist of at least two full-capacity, independent systems that include diverse power sources.	Complies. Refer to Section 10.4.9.2.2.
2. Other powered components of the auxiliary feedwater system should also use the concept of separate and multiple sources of motive energy. An example of the required diversity would be two separate auxiliary feedwater trains, each capable of removing the afterheat load of the reactor system, having one separate train powered from either of two ac sources and the other train wholly powered by steam and dc electric power.	Complies. Refer to Section 10.4.9.2.2.
3. The piping arrangement, both intake and discharge, for each train should be designed to permit the pumps to supply feedwater to any combination of steam generators. This arrangement should take into account pipe failure, active component failure, power supply failure, or control system failure that could prevent system function. One arrangement that would be acceptable is crossover piping containing valves that can be operated by remote manual control from the control room, using the power diversity principle for the valve operators and actuation systems.	Complies. Refer to Figure 10.4-9.

TABLE 10.4-13A (Sheet 5)

II. BTP ASB 10-1 RECOMMENDATION (Cont.)	WCGS POSITION (Cont.)
4. The auxiliary feedwater system should be designed with suitable redundancy to offset the consequences of any single active component failure; however, each train need not contain redundant active components.	Complies. Refer to Section 10.4.9.3 and Table 10.4-13.
5. When considering a high energy line break, the system should be so arranged as to assure the capability to supply necessary emergency feedwater to the steam generators, despite the postulated rupture of any high energy section of the system, assuming a concurrent single active failure.	Complies. Refer to Section 10.4.9.3.

TABLE 10.4-13B

DESIGN COMPARISONS TO NRC RECOMMENDATIONS
ON AUXILIARY FEEDWATER SYSTEMS CONTAINED
IN THE MARCH 10, 1980 NRC LETTER

A. SHORT-TERM RECOMMENDATIONS	WCGS POSITION
1. Recommendation GS-1 - The licensee should propose modifications to the Technical Specifications to limit the time that one auxiliary feedwater system pump and its associated flow train and essential instrumentation can be inoperable. The outage time limit and subsequent action time should be as required in current Technical Specifications; i.e., 72 hours and 12 hours, respectively.	The limiting conditions for operation related to the auxiliary feedwater system are addressed in the Technical Specifications.
2. Recommendation GS-2 - The licensee should lock open single valves or multiple valves in series in the auxiliary feedwater system pump suction piping and lock open other single valves or multiple valves in series that could interrupt all auxiliary feedwater system flow. Monthly inspections should be performed to verify that these valves are locked and in the open position. These inspections should be proposed for incorporation into the surveillance requirements of the plant Technical Specifications. See Recommendation GL-2 for the longer-term resolution of this concern.	This item is not applicable to WCGS because the design does not include single valves or multiple valves in series that could interrupt auxiliary feedwater pump suction or all auxiliary feedwater flow.
3. Recommendation GS-3 - The licensee has stated that it throttles auxiliary feedwater flow to avoid water hammer. The licensee should reexamine the practice of throttling auxiliary feedwater	Throttling auxiliary feedwater flow to avoid water hammer is not utilized. The system design precludes the occurrence of water hammer in the steam generator inlet, as described in Section 10.4.7.2.1.

TABLE 10.4-13B (Sheet 2)

A. SHORT-TERM RECOMMENDATIONS (Cont.)	WCGS POSITION (Cont.)
3. system flow to avoid water hammer. The licensee should verify that the auxiliary feedwater system will supply on demand sufficient initial flow to the necessary steam generators to assure adequate decay heat removal following loss of main feedwater flow and a reactor trip from 100 percent power. In cases where this reevaluation results in an increase in initial auxiliary feedwater system flow, the licensee should provide sufficient information to demonstrate that the required initial auxiliary feedwater system flow will not result in plant damage due to water hammer.	
4. Recommendation GS-4 - Emergency procedures for transferring to alternate sources of auxiliary feedwater system supply should be available to the plant operators. These procedures should include criteria to inform the operator when, and in what order, the transfer to alternate water sources should take place. The following cases should be covered by the procedures:	The WCGS design includes an automatic transfer to the alternate sources of supply. Procedures provide guidance to the operator concerning alternate water sources. The normal supply from the condensate storage tank (CST) is through a locked-open, butterfly valve. Periodic surveillance verifies valve position.

TABLE 10.4-13B (Sheet 3)

A. SHORT-TERM RECOMMENDATIONS (Cont.)	WCGS POSITION (Cont.)
(1) The case in which the primary water supply is not initially available. The procedures for this case should include any operator actions required to protect the auxiliary feedwater system pumps against self-damage before water flow is initiated.	Opening of valves from the backup ESWS and starting of auxiliary feedwater pumps are timed such that an AFWS start with no suction from the CST is not a mode for common failure of all auxiliary feedwater pumps.
(2) The case in which the primary water supply is being depleted. The procedure for this case should provide for transfer to the alternate water sources prior to draining of the primary water supply.	
5. Recommendation GS-5 - The as-built plant should be capable of providing the required auxiliary feedwater system flow for at least 2 hours from any one auxiliary feedwater pump train, independent of any alternating current power source. If manual auxiliary feedwater system initiation or flow control is required following a complete loss of alternating current power, emergency procedures should be established for manually initiating and controlling the system under these conditions. Since the water for cooling of the lube oil for the turbine-driven pump bearings may be dependent on alternating current power,	The turbine-driven pump in the WCGS design is capable of being automatically initiated and operated independent of any alternating current power source for at least 2 hours. Essential controls, valve operators, other supporting systems, and turbine lube oil cooling for the turbine-driven pump are all independent of alternating current power.

TABLE 10.4-13B (Sheet 4)

A. SHORT-TERM RECOMMENDATIONS (Cont.)	WCGS POSITION (Cont.)
5. design or procedural changes shall be made to eliminate this dependency as soon as practicable. Until this is done, the emergency procedures should provide for an individual to be stationed at the turbine-driven pump in the event of loss of all alternating current power to monitor pump bearing and/or lube oil temperatures. If necessary, this operator would operate the turbine-driven pump in a manual on-off mode until alternating current power is restored. Adequate lighting powered by direct current power sources and communications at local stations should also be provided if manual initiation and control of the auxiliary feedwater system is needed. See Recommendation GL-3 for the longer-term resolution of this concern.	
6. Recommendation GS-6 - The licensee should confirm flow path availabiity of an auxiliary feedwater system flow train that has been out of service to perform periodic testing or maintenance as follows: - Procedures should be implemented to require an operator to determine	Valve lineups and independent second operator verification of valve lineups is required on the auxiliary feedwater system after maintenance. Verification of operability is included as part of functional testing on return from extended cold shutdown.

TABLE 10.4-13B (Sheet 5)

A. SHORT-TERM RECOMMENDATIONS (Cont.)	WCGS POSITION (Cont.)
6. that the auxiliary feedwater system valves are properly aligned and a second operator to independently verify that the valves are properly aligned. The licensee should propose Technical Specifications to assure that prior to plant startup following an extended cold shutdown, a flow test would be performed to verify the normal flow path from the primary auxiliary feedwater system water source to the steam generators. The flow test should be conducted with auxiliary feedwater system valves in their normal alignment.	
7. <u>Recommendation GS-7</u> - The licensee should verify that the automatic start auxiliary feedwater system signals and associated circuitry are safety grade. If this cannot be verified, the auxiliary system automatic initiation system should be modified in the short-term to meet the functional requirements listed below. For the longer term, the automatic initiation signals	The WCGS auxiliary feedwater system is designed so that automatic initiation signals and circuits are redundant and meet safety-grade requirements. Refer to Section 7.3.6.

TABLE 10.4-13B (Sheet 6)

A. SHORT-TERM RECOMMENDATIONS (Cont.)	WCGS POSITION (Cont.)
7. and circuits should be upgraded to meet safety-grade requirements as indicated in Recommendation GL-5.	
(1) The design should provide for the automatic initiation of the auxiliary feedwater system flow.	
(2) The automatic initiation signals and circuits should be designed so that a single failure will not result in the loss of auxiliary feedwater system function.	
(3) Testability of the initiation signal and circuits shall be a feature of the design.	
(4) The initiation signals and circuits should be powered from the emergency buses.	
(5) Manual capability to initiate the auxiliary feedwater system from the control room should be implemented so that a single failure in the manual circuits will not result in the loss of system function.	

TABLE 10.4-13B (Sheet 7)

A. SHORT-TERM RECOMMENDATIONS (Cont.)	WCGS POSITION (Cont.)
7. (6) The alternating current motor-driven pumps and valves in the auxiliary feedwater system should be included in the automatic actuation (simultaneous and/or sequential) of the loads to the emergency buses.	
(7) The automatic initiation signals and circuits shall be designed so that their failure will not result in the loss of manual capability to initiate the auxiliary feedwater system from the control room.	
8. Recommendation GS-8 - The licensee should install a system to automatically initiate auxiliary feedwater system flow. This system need not be safety grade; however, in the short term, it should meet the criteria listed below, which are similar to Item 2.1.7.a of NUREG-0578. For the longer term, the automatic initiation signals and circuits should be upgraded to meet safety-grade requirements; as indicated in Recommendation GL-2.	See response to GS-7 above.
(1) The design should provide for the automatic initiation of the auxiliary feedwater system flow.	
(2) The automatic initiation signal and circuits should be designed so that a single failure will not result in the loss of auxiliary feedwater system function.	Rev. 1

TABLE 10.4-13B (Sheet 8)

A. SHORT-TERM RECOMMENDATIONS (Cont.)	WCGS POSITION (Cont.)
8. (3) Testability of the initiating signals and circuits should be a feature of the design.	
(4) The initiating signals and circuits should be powered from the emergency buses.	
(5) Manual capability to initiate the auxiliary feedwater system from the control room should be retained and should be implemented so that a single failure in the manual circuits will not result in the loss of system function.	
(6) The alternating current powered motor-driven pumps and valves in the auxiliary feedwater system should be included in the automatic actuation (simultaneous and/or sequential) of the loads to the emergency buses.	
(7) The automatic initiation signals and circuits should be designed so that their failure will not result in the loss of manual capability to initiate the auxiliary feedwater system from the control room.	
B. ADDITIONAL SHORT-TERM RECOMMENDATIONS	
1. Recommendation - The licensee should provide redundant level indication and low-level alarms in the control room for the auxiliary	The existing WCGS design provides the following redundant control room indication for condensate storage tank level.

TABLE 10.4-13B (Sheet 9)

B. ADDITIONAL SHORT-TERM RECOMMENDATIONS (Cont.)	WCGS POSITION (Cont.)
feedwater system primary water supply to allow the operator to anticipate the need to make up water or transfer to an alternate water supply and prevent a low pump suction pressure condition from occurring. The low-level alarm setpoint should allow at least 20 minutes for operator action, assuming that the largest capacity auxiliary feedwater system pump is operating.	a) LI-4A shown on Figure 9.2-12. b) P1-24A, P1-25A, or P1-26A- Class 1E auxiliary feedwater pump suction pressure indication shown on Figure 10.4-9. Direct correlation between pump suction pressure and tank level is achieved by simple conversion. Exclusion of dynamic piping losses from the conversion results in a conservative determination of tank level. Redundant control room tank level alarms are as follows: a) LALL-9 shown on Figure 9.2-12. b) LAL-24 - Class 1E auxiliary feedwater pump low suction pressure alarm shown on Figure 10.4-9. Setpoints for both alarms allow at least 20 minutes for operator action, assuming that the largest capacity auxiliary feedwater pump is operating.
2. <u>Recommendation (This recommendation has been revised from the original recommendation in NUREG-0611</u> - The licensee should perform a 48-hour endurance test on all auxiliary feedwater system pumps, if such a test or continuous period of operation has not been accomplished to date. Following the 48-hour pump run, the pumps should be shut down and cooled down and then restarted and run for 1 hour. Test acceptance criteria should include	WCGS performed a 48-hour, in situ endurance test on all auxiliary feedwater pumps as part of the preoperational test program.

TABLE 10.4-13B (Sheet 10)

B. ADDITIONAL SHORT-TERM RECOMMENDATIONS (Cont.)	WCGS POSITION (Cont.)
demonstrating that the pumps remain within design limits with respect to bearing/ bearing oil temperatures and vibration and that pump room ambient conditions (temperature, humidity) do not exceed environmental qualification limits for safety-related equipment in the room.	
3. Recommendation - The licensee should implement the following requirements as specified by Item 2.1.7.b on page A-32 of NUREG-0578: Safety-grade indication of auxiliary feedwater flow to each steam generator shall be provided in the control room. The auxiliary feedwater flow instrument channels shall be powered from the emergency buses consistent with satisfying the emergency power diversity requirements for the auxiliary feedwater system set forth in Auxiliary Systems Branch Technical Position 10-1 of the Standard Review Plan, Section 10.4.9	The WCGS auxiliary feedwater design provides safety-grade (Class 1E) indication in the control room of auxiliary feedwater flow to each steam generator. The design utilizes four independent Class 1E power supplies. The safety-grade steam generator level indication provides a backup method for determining the auxiliary feedwater flow to each steam generator.
4. Recommendation - Licensees with plants which require local manual realignment of valves to conduct periodic tests on auxiliary feedwater system trains, and where there is only one remaining auxiliary feedwater system train available for operation, should propose Technical Specifications to provide that a dedicated individual who is in communication with the control room be stationed at the manual valves. Upon instruction from the control room, this operator would realign the valves in the auxiliary feedwater system train from the test mode to their operational alignment.	This recommendation is not applicable to the WCGS design.

TABLE 10.4-13B (Sheet 11)

C. LONG-TERM RECOMMENDATIONS	WCGS POSITION (Cont.)
1. Recommendation GL-1 - For plants with a manual starting system, the licensee should install a system to automatically initiate the auxiliary feedwater system flow. This system and associated automatic initation signals should be designed and installed to meet safety-grade requirements. Manual auxiliary feedwater system start and control capability should be retained with manual start serving as backup to automatic auxiliary system initiation.	The WCGS design includes automatic initiation of the auxiliary feedwater system. Refer to the response to GS-7.
2. Recommendation GL-2 - Licensees with plant designs in which all (primary and alternate) water supplies to the auxiliary feedwater systems pass through valves in a single flow path should install redundant parallel flow paths (piping and valves). Licensees with plant designs in which the primary auxiliary feedwater system water supply passes through valves in a single flowpath, but the alternate auxiliary feedwater system water supplies connect to the auxiliary feedwater system pump suction piping downstream of the above valve(s) should install redundant valves parallel to the above valve(s) or provide automatic opening of the valve(s) from the alternate water supply upon low pump suction pressure. The licensee should propose Technical Specifications to incorporate appropriate periodic inspections to verify the valve positions into the surveillance requirements.	The alternate water supply (essential service water) connects to the auxiliary feedwater pump suction piping downstream of the single, normally locked-open valve in a single flow path from the primary water source (condensate storage tank). Valves from the alternate supply automatically open on low pump suction pressure. Refer to the response to GS-2 and GS-4.

TABLE 10.4-13B (Sheet 12)

C. LONG-TERM RECOMMENDATIONS (Cont.)	WCGS POSITION (Cont.)
3. Recommendation GL-3 - At least one auxiliary feedwater system pump and its associated flow path and essential instrumentation should automatically initiate auxiliary feedwater system flow and be capable of being operated independently of any alternating current power source for at least 2 hours. Conversion of direct current power to alternating current power is acceptable.	The WCGS design meets this recommendation. Refer to the response to GS-5.
4. Recommendation GL-4 - Licensees having plants with unprotected normal auxiliary feedwater system supplies should evaluate the design of their auxiliary feedwater systems to determine if automatic protection of the pumps is necessary following a seismic event or a tornado. The time available to the control room operator, and the time necessary for assessing the problem and taking action should be considered in determining whether operator action can be relied on to prevent pump damage. Consideration should be given to providing pump protection by means such as automatic switchover of the pump suctions to the alternate safety-grade source of water, automatic pump trips on low suction pressure, or upgrading the normal source of water to meet seismic Category I and tornado protection requirements.	As discussed in the response to GS-4 and GL-2 above, the WCGS design includes automatic transfer to the alternate water source. The alternate source (essential service water) is protected from tornados and is seismic Category I.
5. Recommendation GL-5 - The licensee should upgrade the auxiliary feedwater system automatic initiation signals and circuits to meet safety-grade requirements.	As stated in the response to GS-7 the auxiliary feedwater system automatic initiation signals and circuits are safety grade.

TABLE 10.4-14

AUXILIARY FEEDWATER SYSTEM
INDICATING, ALARM, AND CONTROL DEVICES

Indication/Control	Control Room	Local[1]	Control Room Alarm
Condensate storage tank suction valve position	X	X	
ESW suction valve position	X	X	
Condensate storage tank level	X	X	X
Condensate storage tank suction header pressure	X		
Low pump suction pressure	X	X	X
Low pump discharge pressure	X	X	X
Pump flow control valve operation	X	X	
Pump flow control valve position	X	X	
Auxiliary feedwater flow	X	X	
Auxiliary feedwater pump turbine trip & throttle valve position	X	X	X
Auxiliary feedwater pump turbine speed	X	X	X[2]
Auxiliary feedwater pump turbine low lube oil pressure			X
Auxiliary feedwater pump turbine high lube oil temperature			X

(1) Local control here means the auxiliary shutdown panel.
(2) High/Low Speed and Control system fault alarms.

TABLE 10.4-15

SECONDARY LIQUID WASTE SYSTEM
COMPONENT DATA

Secondary Liquid Waste Evaporator	(Note 1)
Quantity	1
Type	Forced circulation
Design process flow, gpm	30
Design pressure (vapor body), psig	30
Design temperature (vapor body), F	300
Cooling water requirements (condenser/subcooler)	
Flow, lb/hr	685,000
Temperature, in/out, F	105/130
Pressure (max), psig	150
Steam requirements (heater)	
Flow, lb/hr	18,000 (min)
Temperature in/out	250 (steam)/250 (liquid)
Pressure, psig	15
Principal design codes	ASME VIII and TEMA R
Quality group	D (augmented)
Materials of Construction	
Vapor body	Inconel 625
Entrainment separator	316L SS
Distillate condenser	316L SS
Distillate subcooler	316L SS
Heater vent gas cooler (shell/tubes)	Carbon steel/316L SS
Condenser vent gas cooler (shell/tubes)	Carbon steel/316L SS
Heater	Inconel 625
Recirculation pump	Alloy 20
Concentrates pumps	Alloy 20
Distillate pump	316L SS
Recirculation piping	Inconel 625
Service (steam and cooling water) Piping	Carbon steel
Valves	Inconel 625, 316L SS, and carbon steel
SLW Charcoal Adsorber	
Quantity	1
Type	Activated carbon
Fluid	Secondary liquid waste evaporator distillate or floor drain waste
Design pressure, psig	150

TABLE 10.4-15 (Sheet 2)

Design temperature, F	200
Design flow, gpm	35
Design pressure drop (fouled condition), psi	10 to 12 at 35 gpm
Volume, ft^3 (charcoal)	88
Design code	ASME Section VIII
Material	304 SS
SLW Demineralizer	
Quantity	1
Type	Mixed bed
Fluid	Secondary liquid waste evaporator distillate, floor drain waste, low TDS waste
Design pressure, psig	150
Design temperature, F	200
Design pressure drop (fouled condition), psi	12 to 15 at 100 gpm
Flow rate, gpm	100
Resin volume, cu ft	55
Design code	ASME Section VIII
Material	304 SS
SLW Oil Interceptor	
Quantity	1
Type	Gravity separation
Design flow, gpm	150
Fluid	Turbine building drains
Design pressure	Atmospheric
Design temperature, F	225
Design code	Manufacturer's standard
Material	304 SS
High TDS Collector Tanks	
Quantity	2
Type	Vertical, cylindrical, dished-bottom
Fluid	Regenerant waste (high TDS)
Capacity, gal	17,000
Design temperature, F	140
Design pressure, psig	15
Internals	Mixer
Design code	ASME Section VIII
Material	316L SS

TABLE 10.4-15 (Sheet 3)

SLW Drain Collector Tanks	
Quantity	2
Type	Vertical, cylindrical, dished bottom
Fluid	Turbine building floor drains
Capacity, gals	15,000
Design temperature, F	200
Design pressure	Atmospheric
Design code	ASME Section VIII
Material	304 SS
Low TDS Collector Tanks	
Quantity	2
Type	Vertical, cylindrical, conical bottom
Fluid	Regenerant waste (low TDS)
Capacity, gals	45,000
Diameter, ft-in.	24-0
Height, ft-in.	20-3
Design temperature, F	150
Design pressure	Atmospheric
Internals	Baffles to promote settling of solids
Material	304 SS
Design code	ASME Section VIII
SLW Monitor Tanks	
Quantity	2
Type	Vertical, cylindrical, dished bottom
Fluid	Processed turbine building floor drains and condensate demineralizer regenerant wastes, borated wastes, and primary water
Capacity, gals	15,000
Design temperature, F	200
Design pressure	Atmospheric
Design code	ASME Section VIII
Material	304 SS

TABLE 10.4-15 (Sheet 4)

Low TDS Collector Tanks Pumps

Quantity	2
Type	In-line centrifugal
Fluid	Regenerant waste (low TDS)
Design pressure, psig	250
Design temperature, F	100
Capacity, gpm	150
Rated head, ft	220
NPSH required, ft	6
Design code	Manufacturer's standard
Material (wetted surface)	316 SS
Motor	20 Hp/460 V/3 phase/60 Hz

Secondary Liquid Waste Oil Interceptor Transfer Pumps

Quantity	2
Type	In-line centrifugal
Fluid	Turbine building floor drains
Design pressure, psig	300
Design temperature, F	150
Capacity, gpm	150
Rated head, ft	51
Design code	Manufacturer's standard
Material	316 SS
Motor	5 hp/460 V/3 phase/60 Hz

High TDS Collector Tanks Pumps

Quantity	2
Type	In-line centrifugal
Fluid	Regenerant waste (high TDS)
Design pressure, psig	300
Design temperature, F	130
Capacity, gpm	35
Rated head, ft	255
NPSH required, ft	8
Design code	Manufacturer's standard
Material (wetted surface)	Alloy 20
Motor	10 Hp/460 V/3 phase/60 Hz

TABLE 10.4-15 (Sheet 5)

SLW Drain Collector Tank Pumps

Quantity	2
Type	In-line centrifugal
Fluid	Turbine building floor drains
Design pressure, psig	300
Design temperature, F	200
Capacity, gpm	35
Rated head, ft	207
NPSH required, ft	8
Design code	Manufacturer's standard
Material (wetted surface)	316 SS
Motor	10 Hp/460 V/3 phase/60 Hz

SLW Discharge Pumps

Quantity	2
Type	In-line centrifugal
Fluid	Processed secondary liquid wastes
Design pressure, psig	300
Design temperature, F	200
Capacity, gpm	100
Rated head, ft	250
NPSH required, ft	7
Design code	Manufacturer's standard
Material (wetted surface)	316 SS
Motor	15 Hp/460 V/3 phase/60 Hz

Low TDS Filters (FHF04A, 04B)*

Quantity	2
Type	Cartridge
Design pressure, psig	150
Design temperature, F	250
Particle retention	(See Note 2 of Table 9.3-13)
Pressure drop, psi @ 100 gpm	
Clean	1
Dirty	25
Design code (vessel)	ASME Section VIII
Material (vessel)	304 SS

*See Table 9.3-13 Sheet 2 comment

High TDS Transfer Tank

Quantity	1
Type	Horizontal
Fluid	Regenerant waste (high TDS)

TABLE 10.4-15 (Sheet 6)

Capacity, gals	3,120
Design temperature, F	130
Design pressure	Atmospheric
Design code	ASME Section VIII
Material	316L SS

High TDS Transfer Tank Pumps

Quantity	2
Type	In-line centrifugal
Fluid	Regenerant waste (high TDS)
Design pressure, psig	300
Design temperature, F	130
Capacity, gpm	450
Rated head, ft	78
NPSH required, ft	8
Design code	Manufacturer's standard
Material (wetted surface)	Alloy 20
Motor	20 Hp/460 V/3 phase/60 Hz

Low TDS Transfer Tank

Quantity	1
Type	Horizontal
Fluid	Regenerant waste (low TDS)
Capacity, gals	3,120
Design temperature, F	130
Design pressure	Atmospheric
Design code	ASME Section VIII
Material	304 SS

Low TDS Transfer Tank Pumps

Quantity	2
Type	In-line centrifugal
Fluid	Regenerant waste (low TDS)
Design pressure, psig	300
Design temperature, F	130
Capacity, gpm	450
Rated head, ft	78
NPSH required, ft	8
Design code	Manufacturer's standard
Material (wetted surfaces)	316 SS
Motor	20 Hp/460 V/3 phase/60 Hz

TABLE 10.4-15 (Sheet 7)

SLW Evaporator Feed Filter (FHF05)*

Quantity	1
Type	Cartridge
Design pressure, psig	150
Design temperature, F	250
Design flow, gpm	35
Particle retention	
30 micron (max)	98% (min)
49 micron	100%
Pressure drop at 35 gpm	
Clean, psi	1
Dirty, psi	25
Material, vessel	316L SS
Design code	ASME Section VIII

Piping and Valves

High TDS and Evaporator Feed

Material	316L SS
Design code	ANSI B31.1
Pressure rating, psig	150

Evaporator Concentrates Discharge

Material	Incoloy 825
Design code	ANSI B31.1
Pressure rating, psig	150

All Others

Material	304 or 316 SS
Design code	ANSI B31.1
Pressure rating, psig	150

*See comments on Sheet 2 of Table 9.3-13.

Note 1: Equipment permanently out of service.