APPENDIX 3A PIPE BREAK ANALYSIS SUMMARY

Introduction

This appendix summarizes the results of the failure mode and effects analyses of breaks in high and moderate energy piping systems.

Summary

Main Steam and Feedwater Pipe Chases and Yard

The main steam and feedwater lines are the largest high energy lines located outside Containment, and a rupture in these lines could, therefore, result in more severe environmental conditions locally than any other line outside Containment. The portions of the main steam and feedwater lines in the containment penetration area between the first pipe whip restraint inside Containment and the first pipe whip restraint outside Containment meet all of the requirements of paragraph B.1.b of MEB 3-1, and are excluded from postulation of circumferential ruptures in this area.

In accordance with Branch Technical Position ASB 3-1, paragraph B1.a.(1), longitudinal breaks of the main steam and feedwater lines have been postulated to occur in the penetration areas. A break area of 1.0 square feet has been postulated for this study.

Outside the Containment in the annulus between the containment structure and the containment enclosure, the main steam and feedwater lines are enclosed in guard pipes, composed of the containment penetration sleeves, which prevent pressurization of the Enclosure Building.

The containment penetrations have been designed to withstand without failure the maximum combination of forces and moments that can be transmitted by the attached piping, so that containment boundary integrity would be assured even without the use of pipe rupture restraints. The pipe rupture restraints are designed to prevent pipe rupture forces and moments from being applied to the containment penetrations and the isolation valves and to limit piping stresses to less than the values required by paragraph B.1.b of MEB 3-1, so that pipe ruptures between the inner and outer pipe whip restraints need not be postulated.

In the main steam and feedwater pipe chases outside Containment, a maximum temperature of 450ºF and pressure of 4.8 psig can be attained as a result of the postulated 1.0 square foot rupture. The P-T effects on essential structures and components have been addressed as follows:

a. The main steam and feed water valve operators are designed to close the valves in the event of loss of instrument air. In addition, the operators are qualified to operate with the 4.8 psig overpressure.

   Direct impingement of steam from a one square foot rupture of the adjacent line would result in mechanical forces and torsion which would not cause failure of the valve body or bonnet, or the attached piping. Possible failure of valve operator solenoids, limit or position switches, or instrument, power, and control cables would not activate the valve because redundant solenoids, switches and instrument, power, and control cables are located on the far side of the valve and are protected by the valve body and operator from direct impingement from the postulated break. A failure of one steam or feedwater line would therefore not result in the loss of function of the other loop.

b. One emergency feedwater steam supply line is located in each pipe chase, so that a single failure in one chase would not affect the steam supply from the other chase.

c. A series of seven "blow-out" panels have been incorporated in the design of the upper walls near the roof line of each pipe chase. The panels are designed to blow out at a differential pressure of 0.5 psi to relieve internal pressure following a large high energy line break.

d. The seismic Category I structure housing the main steam and feedwater pipe chases was analyzed for the temperature and pressure resulting from the 1.0 square foot rupture of the main steam line. It was concluded that the structure can withstand the 450ºF and 4.8 psig conditions, concurrent with SSE, without failure.

In the evaluation of temperature response following a Main Steam Line Break outside Containment, a break spectrum initiated from 100% and 70% of maximum analyzed power has been analyzed at the conditions associated with a core power level of 3659 MWt. The break sizes analyzed are 1.0, 0.9, 0.7, 0.6, 0.5, 0.4, 0.3, 0.2, and 0.1 sq. ft. Each main steamline break outside Containment is represented as a non-mechanistic split piping rupture. Prior to steamline isolation, the steam flow is supplied from all four steam generators, through the postulated break area represented by the spectrum noted. After steamline isolation, the steam release through the break is supplied by a single steam generator.

UFSAR Section 3.11.2.1 states that, based on a detailed review of the MS&FW pipe chase design, Seabrook Station can achieve a safe shutdown under any postulated superheated temperature profile due to a MSLB. This is achieved principally by the separation criteria conceptually designed into these building areas. Seabrook has two separated MS&FW pipe chase areas exiting the east and west sides of containment. Each pipe chases houses the feedwater and main steam piping for two of the four steam generators. The piping is designed under the concepts of "superpipe" (i.e., low stress allowables and upgraded ISI program). Since the requirement is for a minimum of two steam generators for cooldown, the plant can safely shut down under the postulated MSLB in the MS&FW pipe chase designed with "superpipe," using the alternate pipe chase.

The MS&FW pipe chase houses the MS&FW containment isolation valves, Main Steam Safety valves, atmospheric dump valves and MS supply valves to the emergency feed pump turbine. This equipment has been Environmentally Qualified to perform its design basis function during a postulated MSLB outside containment.

A flooding study has been performed to establish the maximum water level in the pipe chases. In accordance with BTP ASB 3-1, a one square foot longitudinal break was postulated in the main feedwater line in the east pipe chase which results in the worst case flood with regard to both flood depth and effect on essential equipment. The resulting flood reaches a level 2'-5" above the pipe chase floor. The instrument room in the east chase has been provided with watertight door and cable tray seals to preclude damage to the MSIV panels within. No other essential equipment is affected by this flood. Note that the similar area in the west pipe chase does not contain similar MSIV panels, and flood protection is not required.

Outside Containment and north of the main steam and feedwater pipe chases, pipe whip restraints are located on both the main steam and the feedwater lines. These whip restraints are designed as boundary restraints to prevent any moments or torsion due to a failure in any part of the nonnuclear portions of these lines from being transmitted to the main steam or feedwater isolation valves or to the containment penetrations. The pipe whip restraints are designed to restrain the maximum forces and moments that can be transmitted by the piping without yielding. The load-bearing portions of the piping that pass through these whip restraints consist of heavy-wall forgings with integral lugs to prevent high local stresses and possible pipe wall collapse under pipe rupture loads.

Failure of the main steam lines at elevation 40'-2" could result in the impact of the main steam line on the exterior north wall of its respective pipe chase. Impact loading would cause local failure of the wall, generating missiles (spalled concrete) inside the pipe chase, jeopardizing essential main steam and feedwater isolation valves, cable trays and instrumentation. To provide protection for this essential equipment, pipe whip restraints have been provided to protect the building from damage. The whip restraints are equipped with crush pads and are mounted on a concrete beam to distribute rupture loading into nearby perpendicular walls. Postulated failures in the feedwater lines in this area do not result in unacceptable consequences.

On the east side of the Containment, the nonnuclear portions of the main steam and feedwater lines are run on elevated supports, and no other safety-related equipment is located in the area.

On the west side of the Containment, the nonnuclear portions of the main steam and feedwater lines run on elevated supports adjacent to the east wall of the Control Building. It was determined by analysis, that a split in the main steam line which runs nearest to the control building wall could cause jet impingement which might result in failure of the two-foot thick reinforced concrete wall, with formation of missiles inside the Control Building. These missiles could jeopardize the safety-related electrical trays in the southeast corner of the building, as well as the motor generator sets. To avoid this problem, this line is sleeved from the point at which it leaves the pipe whip restraints north to a point beyond which missiles would cause no problem, a distance of about sixteen feet vertically and twenty-two feet horizontally. Analysis has shown that rupture of the other high energy lines in this area would cause no unacceptable effects.

Failure of the main steam or feedwater lines on the west side of the Containment where they run along the Turbine Building could result in impact of the ruptured lines on the northeast corner of the Control Building, with the possible generation of missiles that could damage safety-related electrical trays in the Control Building. In order to prevent this effect, a pipe whip restraint bumper has been provided to prevent damage to the control building wall. This bumper is equipped with energy absorbing crush pads and beams to distribute pipe rupture loads to nearby perpendicular walls to prevent panel fracture of the control building wall in this area in the event of a rupture of any of these high energy lines.

Guillotine ruptures inside the Turbine Building would impose blowdown forces on the manifolds in the south direction which would be resisted by the entire piping system inside the Turbine Building and, thus, no impact on the Emergency Feedwater Pumphouse is postulated.

Containment Enclosure and Penetration Area

In the containment enclosure and associated buildings (penetration area), a failure of the chemical and volume control system letdown line, CS-360-9-3" would cause the most severe environmental conditions (see Appendix 3I), but all essential equipment in this area is qualified to operate in a more severe environment, and no failures due to temperature, pressure or humidity are anticipated.

A terminal end rupture of lines CS-328-3-2", CS-329-1-2", CS-330-1-2", CS-331-1-2" or CS-335-1-3" could result in a spray of water at 130°F on nearby essential valve operators 2" CS-V-162, 2" CS-V-166, 3" CS-V-142, 3" CS-V-143, 8" RH-V-20, CS-V-167, 2" CS-V-158, or 2" CS-V-154 and on rack MM-1R-12. The impingement force of the water would be insufficient to damage the valve operators or the rack. Wetting due to the water spray would not cause failure of the valve operators, but could cause a short-circuit failure of the rack's electrical connections. Since the rack does not contain any equipment required for safe shutdown of the nuclear reactor, failure of the electrical connections would be acceptable (see Table 3.6(B)-1).

Rupture of the large component cooling water lines would cause flooding of the lower levels, but pressure and flow monitors would alert the operator that a problem existed. The system inventory is limited to the contents of the piping and the head tank, so that flooding to the elevation of the essential equipment in instrument rack MM-1R-13A is not possible, even if no operator action is taken.

Rupture of the small high energy lines in the area can cause flooding, but each system is provided with pressure and flow monitoring instrumentation that would alert the operator in the event of a rupture of a line. The operator would have sufficient time to isolate the leaking line in any case.

Primary Auxiliary Building and Equipment Vaults

In the Primary Auxiliary Building, the worst environmental conditions would occur from a postulated rupture of the 6" auxiliary steam line break in Zone 33C, which could result in an ambient temperature of 249°F and a pressure of 0.20 psig. All electrical equipment in the PAB which is essential for safe plant shutdown is capable of performing its intended function while exposed to this environment.

Rupture of the large component cooling, reactor makeup water and containment spray lines could result in flooding of the sumps in the equipment vaults. Pressure and flow indicators in each system would alert the operator that a problem existed, so that action to isolate the ruptured line could be taken. The sump high level indicators would also alert the operator that flooding existed.

Uncorrected flooding of one equipment vault might result in loss of function of the equipment in the vault. In this case, the redundant equipment in the other vault would be available for safe plant shutdown.

Other Buildings

Rupture of the hot water heating lines in the Diesel Generator Building, Emergency Feedwater Pumphouse, Service Water Pumphouse and Control Building, would result in short-term elevations of temperature to a maximum of 127°F for 3 minutes. Relative humidity would approach 100 percent, but no flooding would occur because of the limited hot water inventory in the heating system.

APPENDIX 3B **(DELETED IN AMENDMENT 57)**

APPENDIX 3C

PROCEDURE FOR EVALUATING JET IMPINGEMENT LOADS FROM HIGH ENERGY PIPING FAILURES

The information contained in this appendix was not revised, but has been extracted from the original FSAR and is provided for historical information.

CONTENTS

1.	INTRODUCTION	1
2.	REQUIRED INPUT INFORMATION	3
3.	JET IMPINGEMENT FORCES	4
3.1	BLOWDOWN FORCE	4
3.2	FULL JET IMPINGEMENT LOAD	5
3.3	JET IMPINGEMENT PRESSURE	6
3.4	JET IMPINGEMENT AREA	7
3.5	JET IMPINGEMENT ENVELOPE	9
4.0	REFERENCES	21

1. INTRODUCTION

The scope of this guide is to establish convenient but conservative methods of computing fluid jet impingement loads on structures, components and systems due to postulated ruptures in high energy piping (i.e., piping systems where the maximum normal operating temperature exceeds 200°F, or where the maximum normal operating pressure exceeds 275 psig) (REF. 4), inside as well as outside the reactor containment building in accordance with REF. 5. Only mechanical impingement loads have been considered, thermal shock loads due to high energy fluid jets have not been covered by this guide. The jet impingement loads given in this guide are equivalent static loads, based on the conservative assumption that a target encountering the jet remains elastic. 56

A list of minimum input data required to assess the consequences of jet impingement on essential components is provided.

Simplified techniques of computing conservative values of jet impingement loads, areas, pressures and envelopes are presented for both circumferential and longitudinal type of pipe failures. For each case, an illustrated example is given.

If the simplicity and, therefore, the inherent conservatism of the jet impingement criteria given in this guide result in

unacceptable and/or uneconomical jet impingement protection designs, it is recommended that rigorous analysis be performed. Such analysis should include elasto-plastic behavior of the target, non-homogeneous nature of jet, interaction between the jet and its environment, and drag effect due to the shape of the target.

2. REQUIRED INPUT INFORMATION

To determine jet impingement loads on essential structures, systems and components or on such structures, systems and components as may adversely affect essential items, the following is prerequisite information: 56 56

(a) Composite drawings of high energy piping and safety related target structure, systems and components.

(b) Locations and types of postulated break points for each high energy piping, and

(c) State of high energy piping fluid, fluid pressure and pipe data. 56

3. JET IMPINGEMENT FORCES

3.1 BLOWDOWN FORCE

For steady state flow, neglecting fluid friction in pipe, the blowdown force F_B (see Fig. 1) acting on the discharging pipe segment is given by (REF. 1),

$$F_B = K(p-p_\infty)A \qquad .....(1)$$

where:

K = thrust factor (1.26 for flashing and partially flashing fluids and 2.0 for sub-cooled fluids)

p = fluid pressure in pipe

p_∞ = ambient pressure around the target

A = area of jet opening

Area of jet opening for longitudinal breaks and also for circumferential breaks on unrestrained pipes (Fig. 8) is assumed to be equal to the internal cross sectional area of the pipe. However, if the pipe is axially restrained, then in case of a circumferential break the broken ends of the pipe will separate by circular width B, effecting a fan jet, and the jet opening area will be given by,

$$A = \pi DB$$

where:

D = inside diameter of pipe

B = distance between broken ends of pipe

Value of B for a given case depends upon the pipe geometry, pipe material and properties, restraint stiffnesses and fluid characteristics; and can be determined by dynamic or static analysis of the system including piping and restraints.

3.2 FULL JET IMPINGEMENT LOAD

Whenever a discharging jet encounters a target object in its path, the momentum of some fluid particles is changed and an impingement force is developed. Impingement load characteristics depend upon target shape, projected area, and orientation relative to the jet, as well as jet cross sectional area and flow properties. However, the simple model shown in Fig. 1 is used to estimate jet loads on target(s) encountered in a nuclear power plant.

The jet discharges from an open pipe with jet opening area A and expands to an area A_∞ at some distance L, where it is assumed to be homogeneous. Forward motion of the jet is stopped

by the target shown and the net rightward jet impingement force on the target is therefore

$$R_j = p_i A_\infty \qquad .....(2)$$

where:

p_i = uniform impingement pressure on the target

A_∞ = area of fully expanded jet at the target

If momentum and shear interactions between the jet and its environment are assumed to be negligible then, forward momentum conservation for the jet at any location throughout its travel leads to an equality of blowdown force F_B and total jet force R_j. Equivalent static jet impingement force on the target is therefore also given by

$$R_j = 2\ K(p-p_\infty)A \qquad .....(3)$$

3.3 JET IMPINGEMENT PRESSURE

When a system or component encounters only a part of the jet, it is useful to know the impingement pressure to compute the total jet load acting on such a target. From equations (2) and (3), the impingement pressure,

$$P_i = \frac{2K(p-p_\infty)A}{A_\infty} \qquad .....(4)$$

The jet impingement load on a target with area A_t which does not encounter full jet (i.e. $A_t < A_\infty$) is given by

$$R_t = \frac{2K(p-p_\infty)A_t\ A}{A_\infty} \qquad .....(5)$$

3.4 JET IMPINGEMENT AREA

Full jet impingement area A_∞ can be determined if distance L of the target from the jet opening and the shape and size of the jet opening are known. A conservative value of 10° (REF. 3) can be used for jet expansion half-angle $\emptyset$. The shape and size of jet opening are governed by the pipe size and the type of postulated pipe failure. 56

CIRCUMFERENTIAL BREAK

UNRESTRAINED PIPES: Circumferential breaks are perpendicular to the longitudinal axis of the pipe. Total separation of the pipe at the postulated break point is assumed. For unrestrained pipes the break area is therefore equal to internal cross sectional area of the pipe (REF. 2).

The following equation gives full jet impingement area (Fig. 2)

$$A_{\infty} = 0.25\pi(D + 2L \tan\phi)^2 \qquad .....(6)$$

where:

D = inside diameter of the pipe

L = distance of the target from the jet opening

ϕ = expansion half-angle of the jet (=10°)

56

Graph given in Fig. 5 can be used to determine the impingement area A_{∞} for known values of L and D.

RESTRAINED PIPES: Full impingement area of the fan jet due to a postulated circumferential break in a restrained pipe (Fig. 3) is given by

$$A_{\infty} = 2\pi(L + 0.5D)(B + 2L \tan\phi) \qquad .....(7)$$

where:

B = distance between the broken ends of the pipe (see sub-section 3.1)

Graph given in Fig. 6 can be used to determine circular impingement area A_{∞} for known values of L, D and B.

LONGITUDINAL BREAK

Longitudinal breaks are parallel to the axis of the pipe and are oriented at any point around the circumference, (REF. 2). The jet axis is therefore perpendicular to pipe axis. The break area is assumed equal to internal cross sectional area of the pipe and the shape of the break is assumed to be rectangular so that the long side of the rectangle is parallel to pipe axis and is equal to twice the inside diameter of the pipe.

Full jet impingement area on a normal target plane (Fig. 4) is given by 56

$$A_{\infty} = (2D + \Delta_1)\left(\frac{\pi D}{8} + \Delta_1\right) \qquad .....(8)$$ 56

where Δ_1, = 2L tan ϕ. 56

Graph given in Fig. 7 can be used to determine full jet impingement area A_{∞} for known values of L and D.

If the jet axis is not normal to the target plane, and makes an angle θ to the normal direction, then the full jet impingement area on the target plane is given by:

$$A = (2D + \Delta_2)\left(\frac{\pi D}{8} + \Delta_2\right)/\cos\theta, \qquad .....(9)$$

where Δ_2 + 2L tan $\phi/\cos\theta$ 56

3.5 JET IMPINGEMENT ENVELOPE

An area of the target structure larger than the full impingement area A may be affected due to the motion of the unrestrained 56

broken pipe following a circumferential break. Such an area is called jet impingement envelope. It is generally not applicable to longitudinal breaks where pipe displacement is limited.

56

CIRCUMFERENTIAL BREAK

In case of a circumferential break due to unrestrained motion of the broken end of the pipe, the impinging jet will traverse a larger area of the target structure. In Fig. 8, first the wall and then the floor will encounter the jet force from point a to point i as the broken pipe swings from position 1 to position n.

Jet impingement envelope then can be developed by determining full jet impingement areas at the wall and floor according to initial position, some selected intermediate positions, and the final position of the broken end of the pipe in motion, (i.e. positions 1,2,3,.....,n). The locations and magnitude of jet impingement loads will vary from points a to i, depending upon the distance between the source of the jet and the target structure, and the inclination of the target structure to the jet axis, at any given instant.

PAGE 11 OF APPENDIX 3C

DELETED

IN AMENDMENT 56

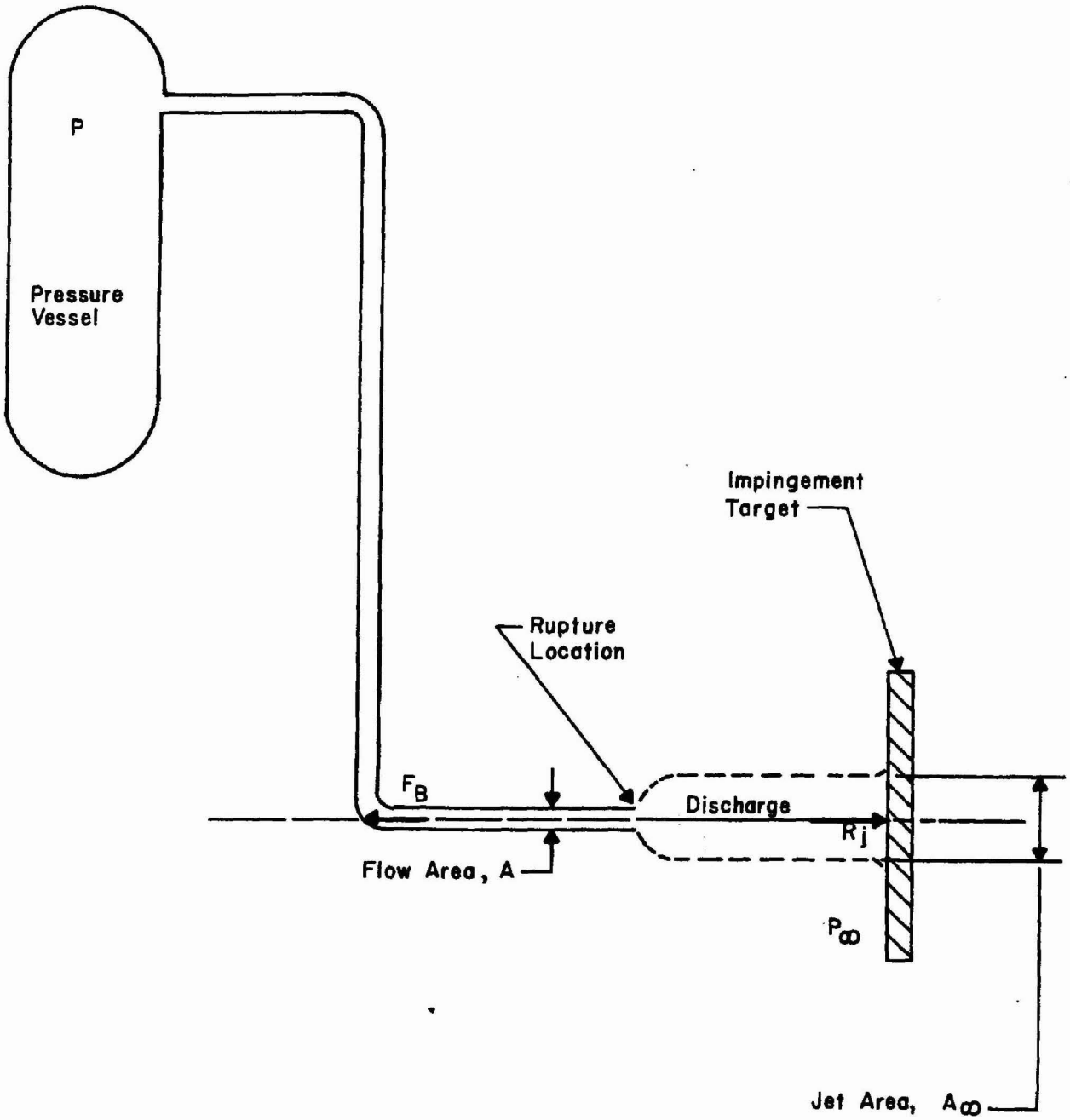

FIGURE 1
GENERAL MODEL

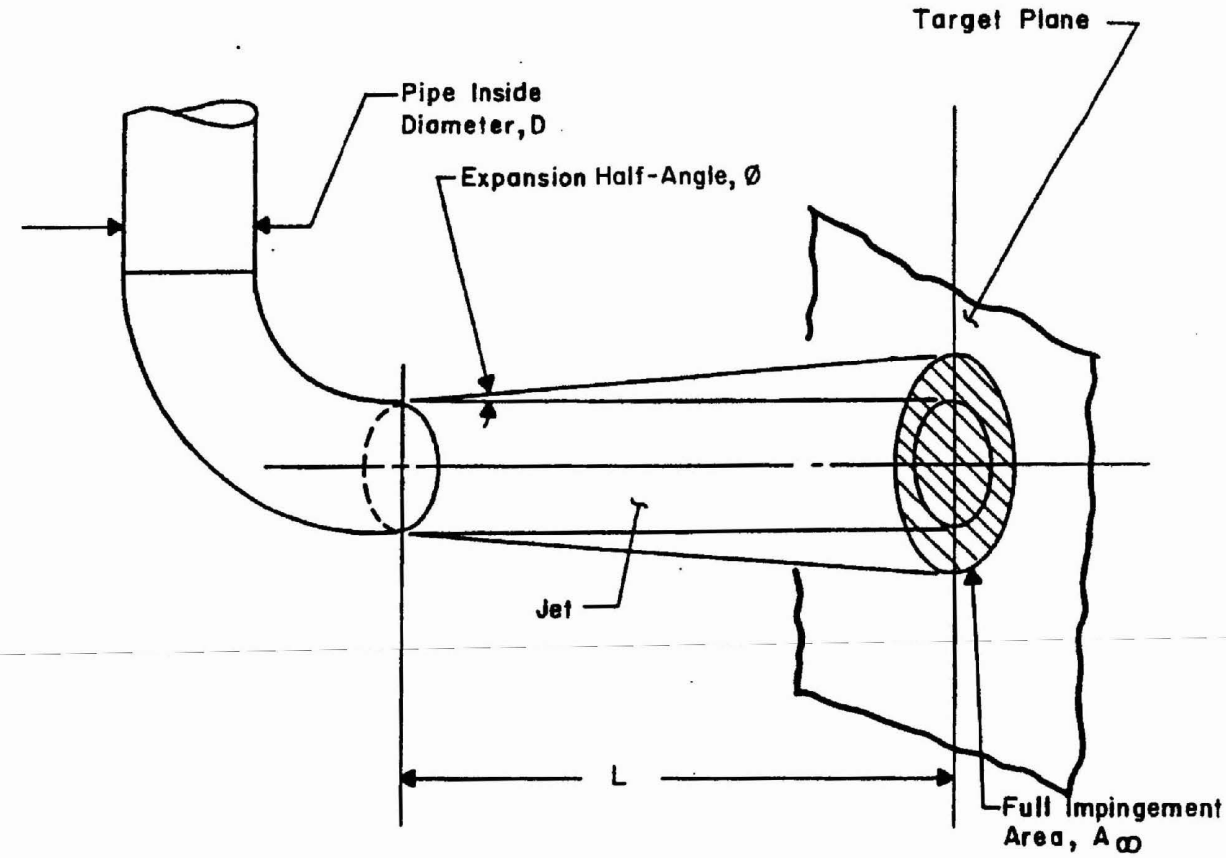

FIGURE 2
FULL IMPINGEMENT AREA - CIRCUMFERENTIAL BREAK
UNRESTRAINED PIPE

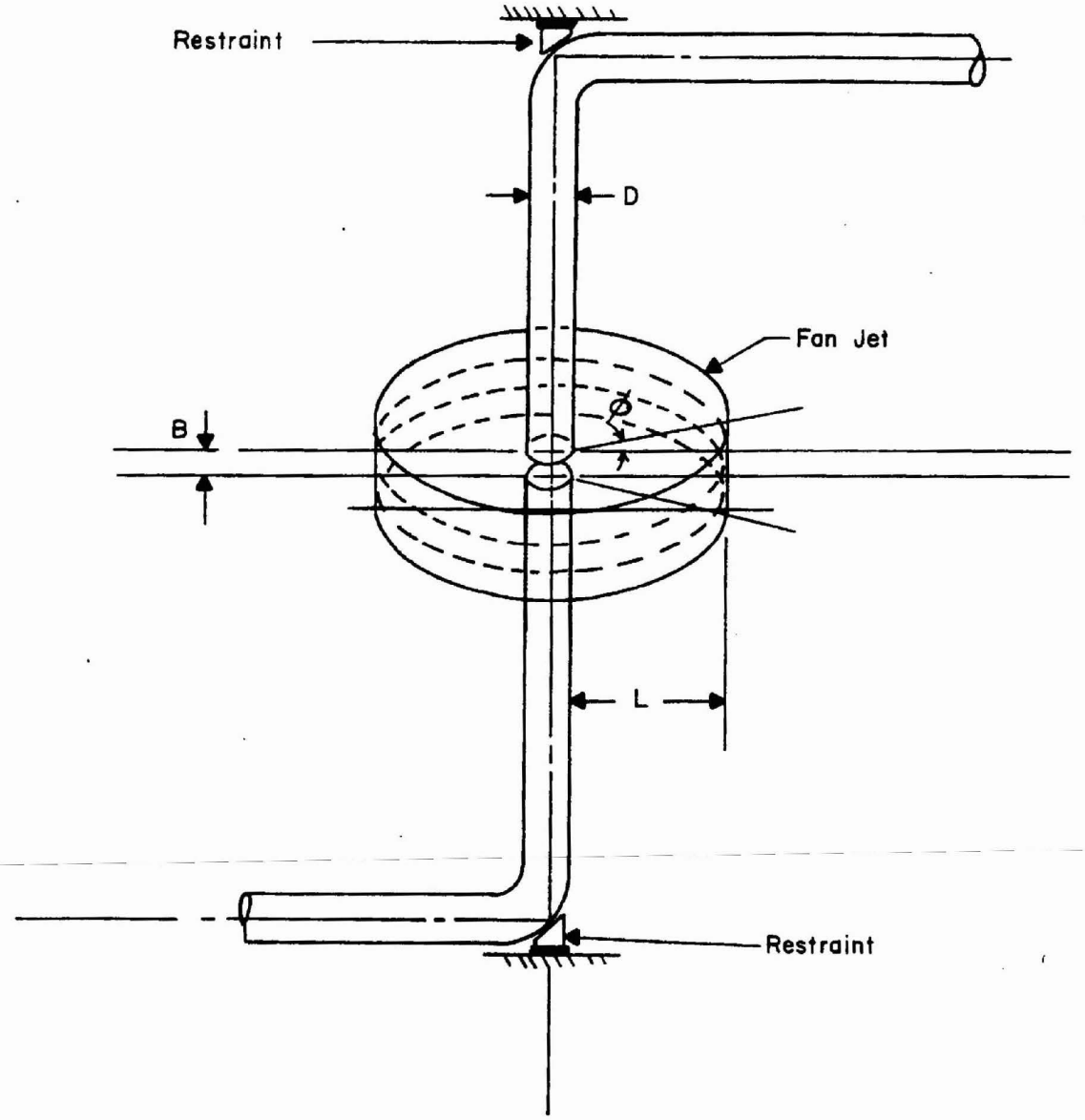

FIGURE 3

FULL IMPINGEMENT AREA - CIRCUMFERENTIAL BREAK

RESTRAINED PIPE

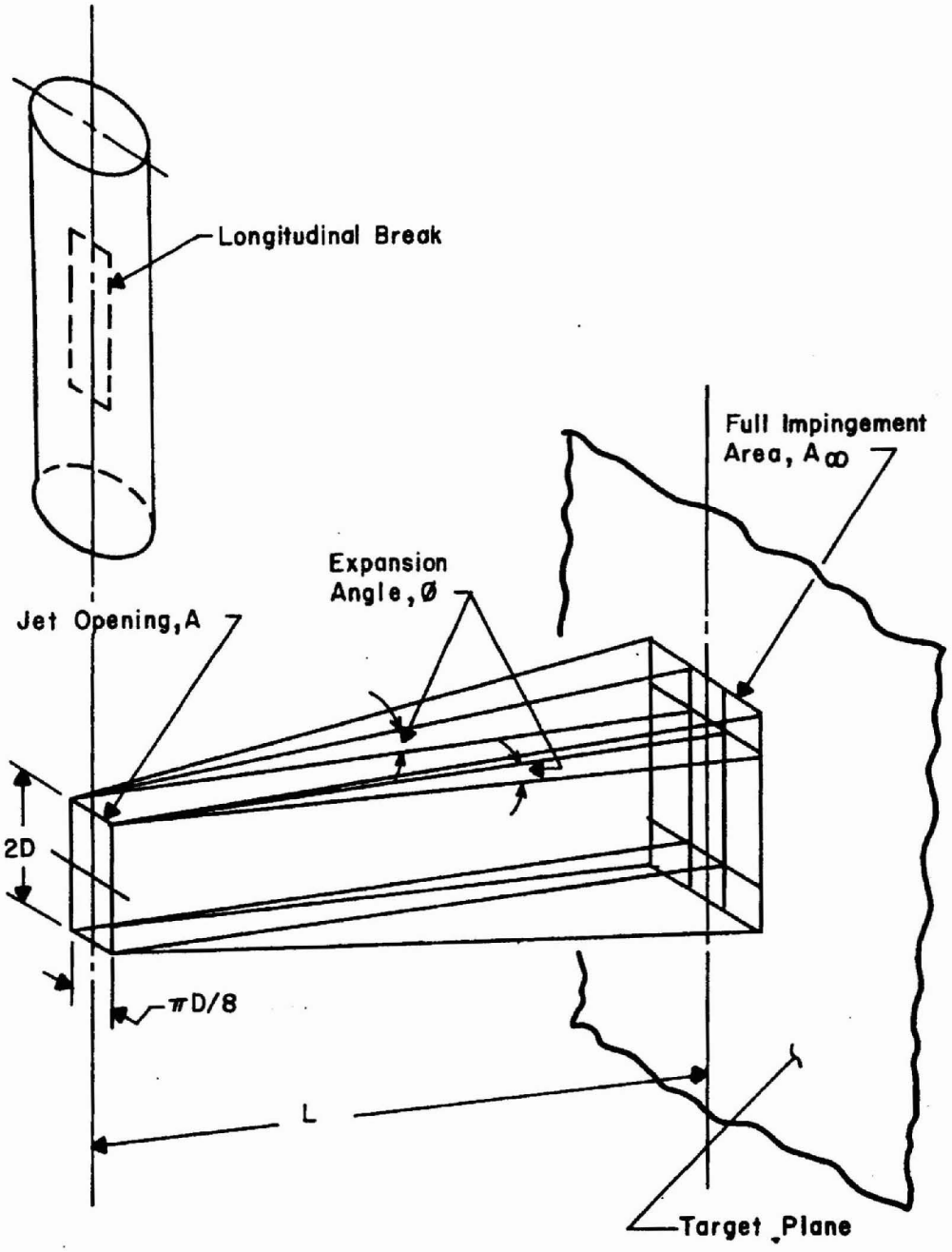

FIGURE 4

JET IMPINGEMENT AREA- LONGITUDINAL BREAK

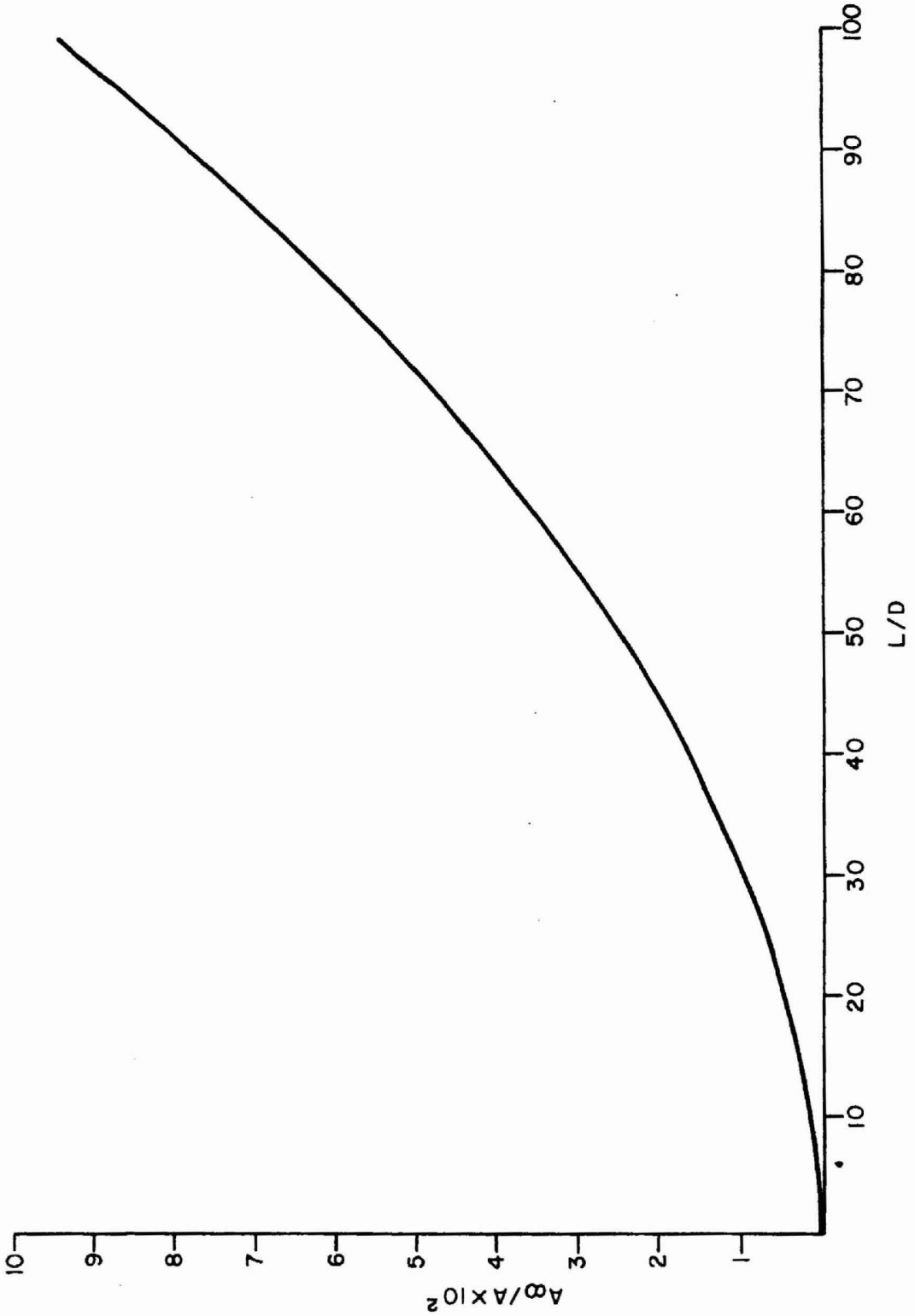

FIGURE 5

JET IMPINGEMENT AREA - CIRCUMFERENTIAL BREAK

UNRESTRAINED PIPE

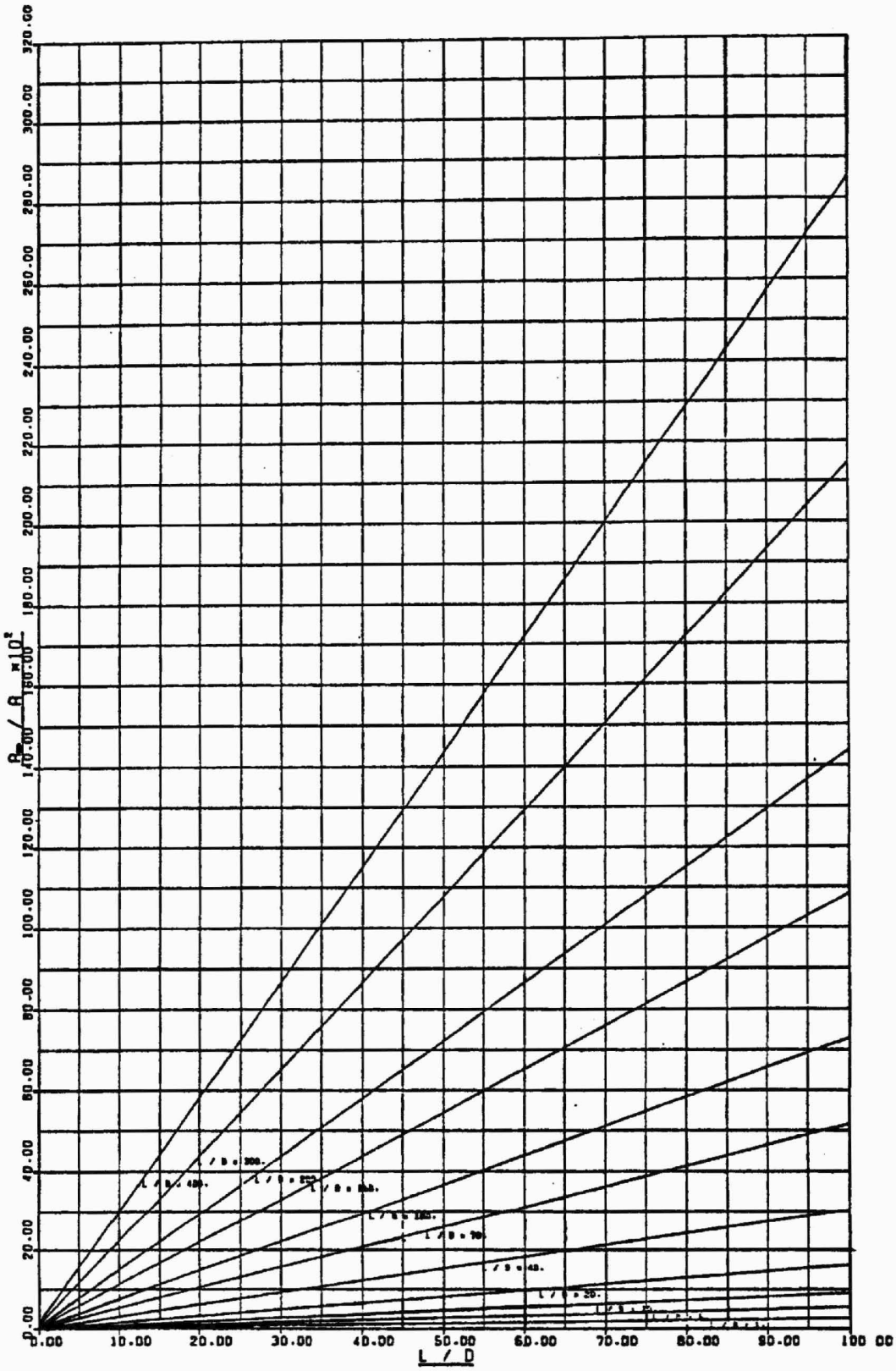

FIGURE 6

JET IMPINGEMENT AREA - CIRCUMFERENTIAL BREAK

RESTRAINED PIPE

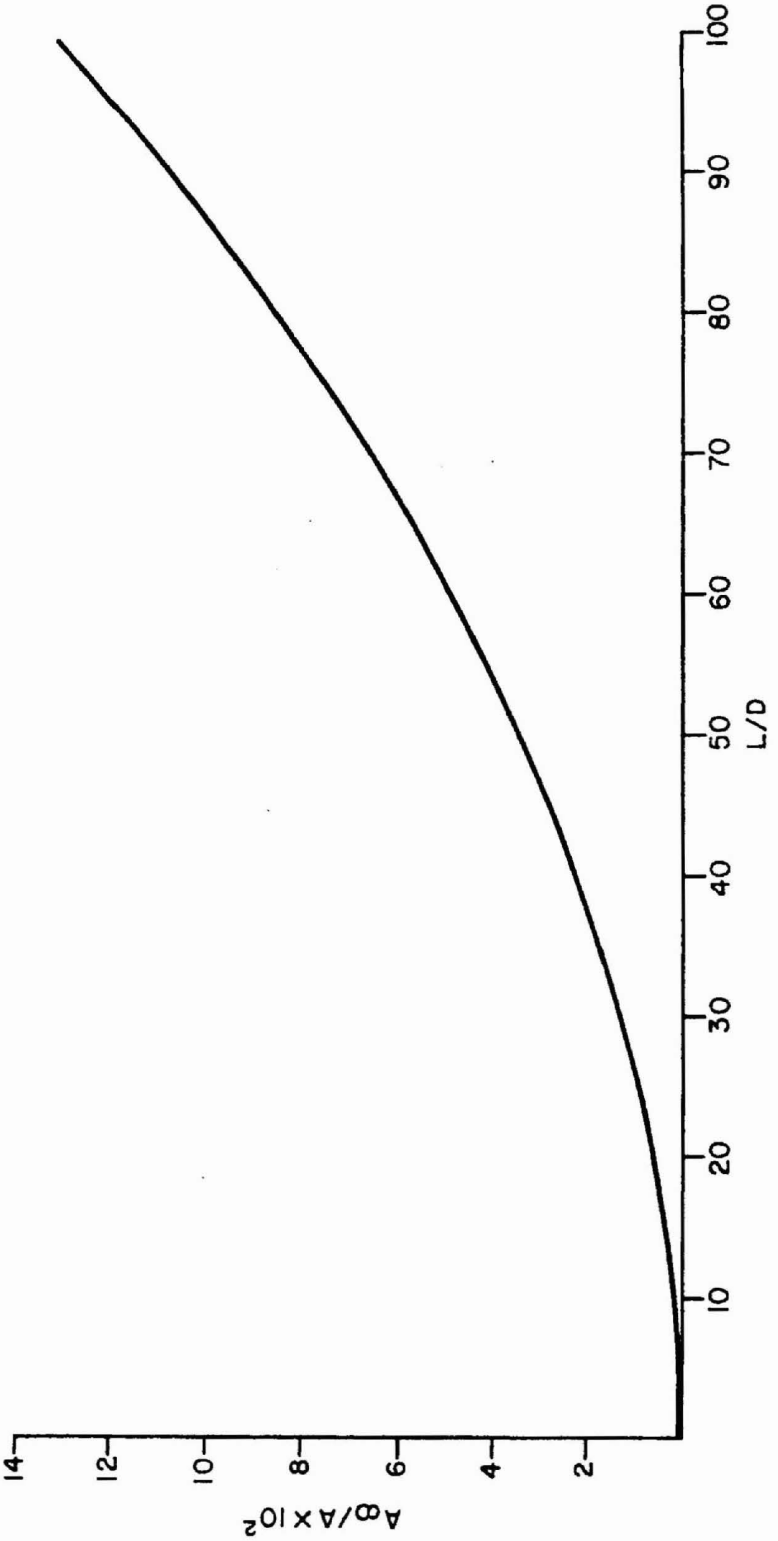

FIGURE 7

JET IMPINGEMENT AREA- LONGITUDINAL BREAK

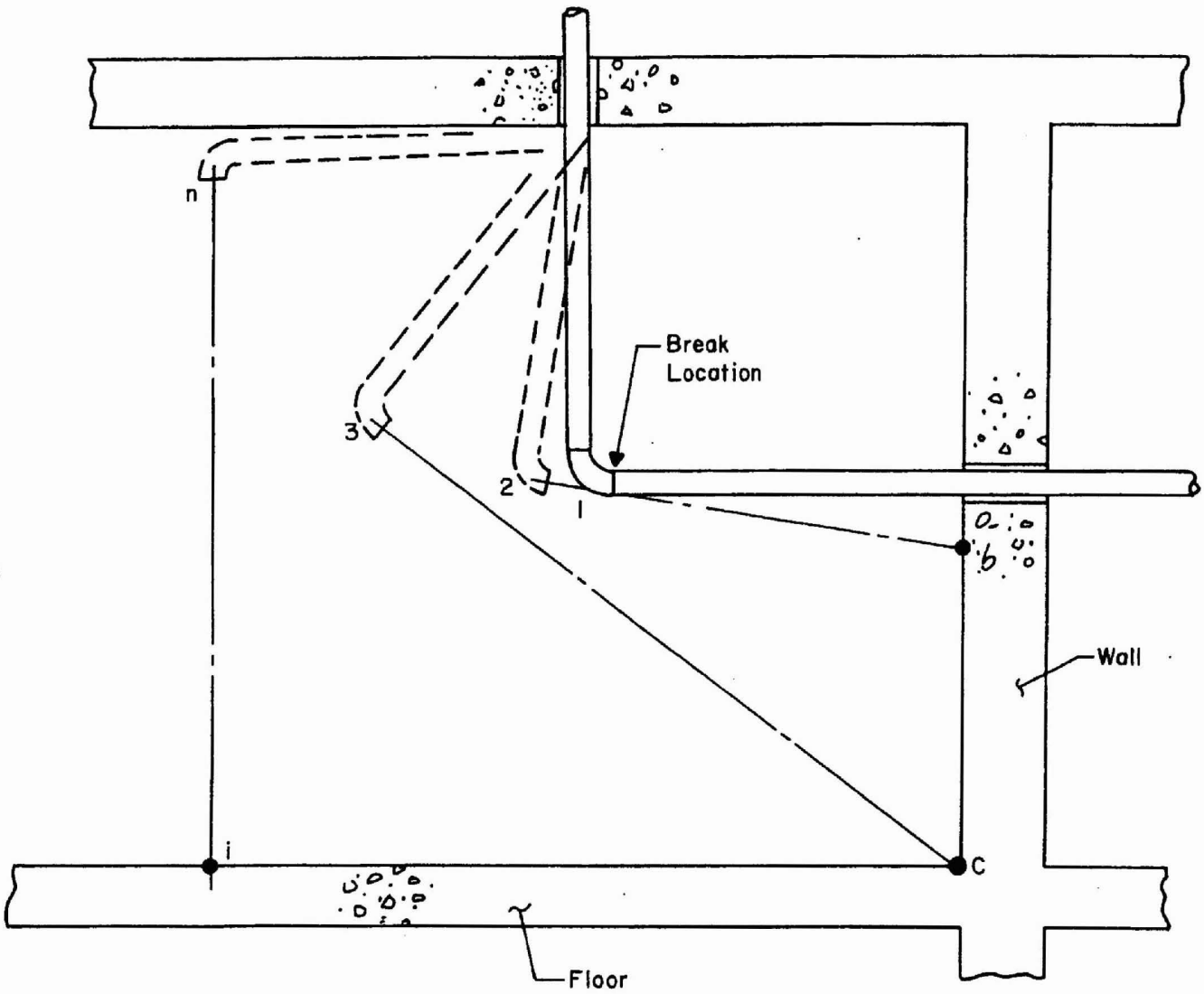

FIGURE 8

JET IMPINGEMENT ENVELOPE - CIRCUMFERENTIAL BREAK

UNRESTRAINED PIPE

PAGE 20 OF APPENDIX 3C

DELETED

IN AMENDMENT 56

4. REFERENCES

1. F.J. MOODY, "Prediction of Blowdown Thrust and Jet Forces", ASME Publication No. 69-HT-31, May 1969.

2. Regulatory Guide 1.46, "Protection Against Pipe Whip Inside Containment", Directorate of Regulatory Standards, U.S. Atomic Energy Commission.

3. ANSI N176, "Design Basis for Protection of Nuclear Power Plants against Effects of Postulated Pipe Failures", ANS-58.2, American Nuclear Society, May 1975.