SEABROOK STATION
UPDATED FINAL SAFETY ANALYSIS REPORT

CHAPTER 5
REACTOR COOLANT SYSTEM AND CONNECTED SYSTEMS

SECTIONS

5.1	Summary Descriptions
5.2	Integrity of Reactor Coolant Pressure Boundary
5.3	Reactor Vessel
5.4	Component and Subsystem Design

5.1 SUMMARY DESCRIPTION

The Reactor Coolant System (RCS), shown in Figure 5.1-1, Figure 5.1-2, Figure 5.1-3 and Figure 5.1-4, consists of four similar heat transfer loops connected in parallel to the reactor pressure vessel. Each loop contains a reactor coolant pump, steam generator and associated piping and valves. In addition, the system includes a pressurizer, pressurizer relief tank, pressurizer relief and safety valves, interconnecting piping and instrumentation necessary for operational control. All the above components are located in the Containment Building.

During operation, the RCS transfers the heat generated in the core to the steam generators where steam is produced to drive the turbine generator. Borated demineralized water is circulated in the RCS at a flow rate and temperature consistent with achieving the reactor core thermal-hydraulic performance. The water also acts as a neutron moderator and reflector and as a solvent for the neutron absorber used in chemical shim control.

The RCS pressure boundary provides a barrier against the release of radioactivity generated within the reactor, and is designed to ensure a high degree of integrity throughout the life of the plant.

RCS pressure is controlled by the use of the pressurizer, where water and steam are maintained in equilibrium by electrical heaters and water sprays. Steam can be formed (by the heaters) or condensed (by the pressurizer spray) to minimize pressure variations due to contraction and expansion of the reactor coolant. Spring-loaded safety valves and power-operated relief valves from the pressurizer provide for steam discharge to the pressurizer relief tank, where the steam is condensed and cooled by mixing with water.

a. Extent of the RCS

1. The reactor vessel, including control rod drive mechanism housings and incore instrumentation guide tubes
2. The reactor coolant side of the steam generators
3. Reactor coolant pumps
4. A pressurizer attached to one of the reactor coolant loops
5. Safety and relief valves
6. The interconnecting piping, valves and fittings between the principal components listed above
7. The piping, fittings and valves leading to connecting auxiliary or support systems up to and including the second isolation valve (from the high pressure side) on each line.

b. Reactor Coolant System Components

1. Reactor Vessel

The reactor vessel is cylindrical, with a welded hemispherical bottom head and a removable, flanged and gasketed, hemispherical upper head. The vessel contains the core, core supporting structures, control rods and other parts directly associated with the core.

The vessel has inlet and outlet nozzles located in a horizontal plane just below the reactor vessel flange but above the top of the core. Coolant enters the vessel through the inlet nozzles and flows down the core barrel-vessel wall annulus, turns at the bottom and flows up through the core to the outlet nozzles.

2. Steam Generators

The steam generators are vertical shell and U-tube evaporators with integral moisture separating equipment. The reactor coolant flows through the inverted U-tubes entering and leaving through the nozzles located in the hemispherical bottom head of the steam generator. Steam is generated on the shell side and flows upward through the moisture separators to the outlet nozzle at the top of the vessel.

3. Reactor Coolant Pumps

The reactor coolant pumps are identical single speed centrifugal units driven by water/air cooled, three phase induction motors. The internal parts of the motor are cooled by air which is routed through external water/air heat exchangers. The shaft is vertical with the motor mounted above the pump. A flywheel on the shaft above the motor provides additional inertia to extend pump coastdown. The inlet is at the bottom of the pump and the discharge on the side.

4. Piping

The reactor coolant loop piping is specified in sizes consistent with system requirements.

The hot leg inside diameter is 29 inches and the inside diameter of the cold leg return line to the reactor vessel is 27½ inches. The piping between the steam generator and the pump suction is increased to 31 inches in inside diameter to reduce pressure drop and improve flow conditions to the pump suction.

5. Pressurizer

The pressurizer is a vertical, cylindrical vessel with hemispherical top and bottom heads. Electrical heaters are installed through the bottom head of the vessel while the spray nozzle, relief and safety valve connections are located in the top head of the vessel.

6. Safety and Relief Valves

The pressurizer safety valves are of the totally enclosed pop-type. The valves are spring loaded, self-activated with back pressure compensation. The power-operated relief valves limit system pressure for a large power mismatch. They are operated automatically or by remote manual control. Remotely operated valves are provided to isolate the inlet to the power-operated valves if excessive leakage occurs.

Steam from the pressurizer safety and relief valves is discharged into the pressurizer relief tank, where it is condensed and cooled by mixing with water near ambient temperature.

7. Pressurizer Relief Tank

Refer to Subsection 5.4.11.2a.

8. Pressurizer Relief Tank Pump

The PRT pump is an end suction centrifugal pump with TEFC Motor. The pump is used to circulate water through the PRT heat exchanger to cool the PRT following a discharge by the pressurizer SRVs or PORVS. The pump is also used to transfer the cooled fluid to the Liquid Waste Processing System.

9. Pressurizer Relief Tank Heat Exchanger

This heat exchanger is a horizontal shell and tube type. It is cooled by primary component cooling water to remove heat from the PRT following a discharge by the SRVs or PORVs.

c. Reactor Coolant System Performance Characteristics

Tabulations of important design and performance characteristics of the RCS are provided on Table 5.1-1.

d. Reactor Coolant Flow

The reactor coolant flow, a major parameter in the design of the system and its components, is established with a detailed design procedure supported by operating plant performance data, by pump model tests and analysis, and by pressure drop tests and analyses of the reactor vessel and fuel assemblies. Data from all operating plants have indicated that the actual flow has been well above the flow specified for the thermal design of the plant. By applying the design procedure described below, it is possible to specify the expected operating flow with reasonable accuracy.

Three reactor coolant flow rates are identified for the various plant design considerations. The definitions of these flows are presented in the following paragraphs.

1. Best Estimate Flow

The best estimate flow is the most likely value for the actual plant operating condition. This flow is based on the best estimate of the reactor vessel, steam generator and piping flow resistance, and on the best estimate of the reactor coolant pump head-flow capacity, with no uncertainties assigned to either the system flow resistance or the pump head. System pressure drops, based on best estimate flow, are presented on Table 5.1-1. Although the best estimate flow is the most likely value to be expected in operation, more conservative flow rates are applied in the thermal and mechanical designs.

2. Thermal Design Flow

Thermal design flow is the basis for the reactor core thermal performance, the steam generator thermal performance, and the nominal plant parameters used throughout the design. To provide the required margin, the thermal design flow accounts for the uncertainties in reactor vessel, steam generator and piping flow resistances, reactor coolant pump head, and the methods used to measure flow rate. The thermal design flow is approximately 4.5 percent less than the best estimate flow. The thermal design flow is confirmed when the plant is placed in operation. Tabulations of important design and performance characteristics of the RCS as provided on Table 5.1-1 are based on the thermal design flow.

3. Mechanical Design Flow

Mechanical design flow is the conservatively high flow used in the mechanical design of the reactor vessel internals and fuel assemblies. To assure that a conservatively high flow is specified, the mechanical design flow is based on a reduced system resistance and on increased pump head capability. For Seabrook, the mechanical design flow is approximately 4.0 percent greater than the best estimate flow.

Pump overspeed, due to a turbine generator overspeed of 20 percent, results in a peak reactor coolant flow of 120 percent of the mechanical design flow. The overspeed condition is applicable only to operating conditions when the reactor and turbine generator are at power.

e. Interrelated Performance and Safety Functions

The interrelated performance and safety functions of the RCS and its major components are listed below:

1. The RCS provides sufficient heat transfer capability to transfer the heat produced during power operation and when the reactor is subcritical, including the initial phase of plant cooldown, to the Steam and Power Conversion System.
2. The system provides sufficient capability to transfer the heat produced during the subsequent phase of plant cooldown and cold shutdown to the Residual Heat Removal System.
3. The system heat removal capability under power operation and normal operational transients, including the transition from forced to natural circulation, assures no fuel damage within the operating bounds permitted by the reactor control and protection systems.
4. The RCS provides the water used as the core neutron moderator and reflector and as a solvent for chemical shim control.
5. The system maintains the homogeneity of soluble neutron poison concentration and rate of change of coolant temperature, so that uncontrolled reactivity changes do not occur.
6. The reactor vessel is an integral part of the RCS pressure boundary and is capable of accommodating the temperatures and pressures associated with the operational transients. The reactor vessel functions to support the reactor core and control rod drive mechanisms.

7. The pressurizer maintains the system pressure during operation and limits pressure transients. During the reduction or increase of plant load, reactor coolant volume changes are accommodated in the pressurizer via the surge line.
8. The reactor coolant pumps supply the coolant flow necessary to remove heat from the reactor core and transfer it to the steam generator.
9. The steam generators provide high quality steam to the turbine. The tube and tubesheet boundary are designed to prevent the transfer of activity generated within the core to the secondary system.
10. The RCS piping serves as a boundary for containing the coolant under operating temperature and pressure conditions and for limiting leakage (and activity release) to the containment atmosphere. The RCS piping contains demineralized borated water which is circulated at the flow rate and temperature consistent with achieving the reactor core thermal and hydraulic performance.

5.1.1 Schematic Flow Diagram

The RCS is shown schematically in Figure 5.1-5. Included in this figure are typical values for principal parameters of the system under normal steady state full power operating conditions. These values are based on the best estimate flow at the pump discharge. RCS volume under the above conditions is presented on Table 5.1-1.

5.1.2 Piping and Instrumentation Diagram

A piping and instrumentation diagram of the RCS is shown in Figure 5.1-1, Figure 5.1-2, Figure 5.1-3, and Figure 5.1-4. The diagrams show the extent of the systems located within the Containment, and the points of separation between the RCS and the secondary (heat utilization) system.

5.1.3 Elevation Drawing

Figure 1.2-2, Figure 1.2-3, Figure 1.2-5 and Figure 1.2-6 are plan and elevation drawings which present the principal dimensions of the Reactor Coolant System in relation to the supporting or surrounding concrete structures. These drawings show a measure of the protection afforded by the arrangement and the safety considerations incorporated in the layout.

5.2 INTEGRITY OF REACTOR COOLANT PRESSURE BOUNDARY

This section discusses the measures employed to provide and maintain the integrity of the reactor coolant pressure boundary (RCPB) for the plant's design lifetime. The RCPB is as defined in Section 50.2 of 10 CFR 50. In that definition, the RCPB extends to the outermost containment isolation valve in the system piping which penetrates the Containment and is connected to the Reactor Coolant System (RCS). Since other sections describe the components of these auxiliary fluid systems, this section will be limited to the components of the RCS as defined in Section 5.1, unless otherwise noted.

The reactor coolant pressure boundary is designed to accommodate the system pressures and temperatures attained under all expected modes of plant operation, including all anticipated transients, and to maintain the stresses within applicable stress limits. The system is protected from overpressure by means of pressure-relieving devices, as required by applicable codes. Materials of construction are specified to minimize corrosion and erosion and to provide a structural system boundary throughout the life of the plant. Fracture prevention measures are taken to prevent brittle fracture. Inspection is in accordance with applicable codes, and provisions are made for surveillance of critical areas to enable periodic assessment of the boundary integrity, as described in Subsection 5.2.4.

For additional information on the RCS, and for components which are part of the RCPB but are not described in this section, refer to the following sections:

a. Section 6.3 - for the RCPB components which are part of the Emergency Core Cooling System

b. Subsection 9.3.4 - for the RCPB components which are part of the Chemical and Volume Control System

c. Subsection 3.9(N).1 - for the design loadings, stress limits, and analyses applied to the RCS and ASME Code Class 2 components

d. Subsection 3.9(N).3 - for the design loadings, stress limits and analyses applied to ASME Code Class 2 and 3 components.

5.2.1 Compliance with Codes and Code Cases

5.2.1.1 Compliance with 10 CFR Section 50.55a

RCS components are designed and fabricated in accordance with 10 CFR 50, Section 50.55a, "Codes and Standards." The addenda of the ASME Code applied in the design of each component are listed in Table 5.2-1.

5.2.1.2 Applicable Code Cases

Compliance with Regulatory Guides 1.84 and 1.85 is discussed in Section 1.8. The following discussion addresses only unapproved or conditionally approved code cases (per Regulatory Guides 1.84 and 1.85) used on Class 1 primary components.

Code Case 1528 (SA 508 Class 2a) material has been used in the manufacture of the Seabrook pressurizer. It should be noted, that the purchase order for this equipment was placed prior to the original issue of Regulatory Guide 1.85 (June 1974); Regulatory Guide 1.85 presently reflects a conditional NRC approval of Code Case 1528. Westinghouse has conducted a test program which demonstrates the adequacy of Code Case 1528 material. The results of the test program are documented in Reference 1. Reference 1 and a request for approval of the use of Code Case 1528 have been submitted to the NRC (via letter NS-CE-1730 dated March 17, 1978, to Mr. J.F. Stolz, NRC Office of Nuclear Reactor Regulation, from Mr. C. Eicheldinger, Westinghouse Nuclear Safety Department).

In addition to Code Case 1528, the following ASME Code Cases have been used in the construction of Class 1 components:

NSSS

Component	Code Case	Title
CRDM	N-228	Alternate Rules for Sequence of Completion of Code Data Report Forms and Stamping for Section III, Classes 1, 2, 3 and MC Construction
Steam Generator	1528-3	High Strength Steel SA-508, Class 2, and SA-541, Class 2 Forgings, Section III, Class 1 Components
	1484-3	SB-163 Nickel-Chromium Iron Tubing (Alloy 600 and 690) and Nickel-Iron Chromium Alloy 800 at a Specified Minimum Yield Strength of 40.0 Ksi, Section III, Division 1, Class 1
RC Pipe	1423-2	Wrought Type 304 and 316 with Nitrogen Added, Sections I, III, VIII, Divisions 1 and 2
Valves	1553-1	Upset Heading and Roll Threading of SA-453 for High-Temperature Bolting, Section III, Classes 1, 2, 3 and MC Construction
	1649	Modified SA-453 - Gr 660 for Classes 1, 2 and 3 and CS Construction

The reactor coolant pumps for Seabrook Station will be ASME certified following the cold hydrotest at the site. Following the testing, pumps will be N-stamped, ASME Code Data Forms will be signed, and appropriate Code Cases, if any, will be noted.

BOP

Component	Code Case	Title
Piping	N-228	Alternative Rules for Sequence of Completion of Code Case Data Report Forms and Stamping for Section III, Classes 1, 2, 3 and MC Construction.
	N-237	Hydrostatic Testing of Internal Piping, Section III; Division 1.
Small Bore	1621	Line Valve Internal and External Valves Items, Section III, Classes 1, 2 and 3, April 29, 1974.

5.2.2 Overpressure Protection

RCS overpressure protection is accomplished by the utilization of pressurizer safety valves along with the Reactor Protection System and associated equipment. Combinations of these systems provide compliance with the overpressure requirements of the ASME Boiler and Pressure Vessel Code, Section III, paragraphs NB-7300 and NC-7300, for pressurized water reactor systems.

Auxiliary or emergency systems connected to the RCS are not utilized during power operation for prevention of RCS overpressurization protection. During plant shutdowns, when RHR is in service, low temperature overpressure protection may be provided by RC-V24 and/or RC-V89. These are relief valves in the suction line to the RHR pumps and are outside the reactor coolant pressure boundary.

5.2.2.1 Design Bases

Overpressure protection is provided for the RCS by the pressurizer safety valves which discharge to the pressurizer relief tank by a common header. The transient which sets the design requirements for the primary system overpressure protection is a complete loss of steam flow to the turbine, with credit taken for steam generator safety valve operation. For the sizing of the pressurizer safety valves, main feedwater is maintained and no credit is taken for reactor trip nor the operation of the following:

a. Pressurizer power-operated relief valves

b. Steam line relief valve

c. Steam Dump System

d. Reactor Control System

e. Pressurizer Level Control System

f. Pressurizer spray valve.

For this transient, the peak RCS and peak steam system pressures must be limited to 110 percent of their respective design values.

Assumptions for the initial overpressure protection system design analysis include: (1) the plant is operating at the power level corresponding to the engineered safeguards design rating plus 2 percent uncertainty and (2) the RCS average temperature and pressure are at their maximum values. These are the most limiting assumptions with respect to system overpressure.

The assumed instrument and control errors were as follows:

2% Power

5.8°F Temperature

30 psi Pressure

Overpressure protection for the steam system is provided by steam generator safety valves. The steam system safety valve capacity is based on providing enough relief to remove 105 percent of the engineered safeguards design steam flow. This must be done by limiting the maximum steam system pressure to less than 110 percent of the steam generator shell side design pressure.

Blowdown and heat dissipation systems of the Nuclear Steam Supply System connected to the discharge of these pressure relieving devices are discussed in Subsection 5.4.11.

Steam Generator Blowdown Systems for the balance-of-plant are discussed in Chapter 10.

Postulated events and transients on which the design requirements of the Overpressure Protection System are based, are discussed in Reference 2.

5.2.2.2 Design Evaluation

The relief capacities of the pressurizer and steam generator safety valves are determined from the postulated overpressure transient conditions in conjunction with the action of the Reactor Protection System. An evaluation of the functional design of the system and an analysis of the capability of the system to perform its function is presented in Reference 2. Reference 2 describes in detail the types and number of pressure relief devices employed, relief device description, locations in the systems, reliability history, and the details of the methods used for relief device sizing based on typical worst case transient conditions and analysis data for each transient condition. The description of the analytical model used in the initial design analysis of the Overpressure Protection System and the basis for its validity are discussed in Reference 3.

A comparison of Seabrook parameters with those in Reference 2 is provided in Table 5.2-8.

A description of the pressurizer safety valves performance characteristics is provided in Chapter 5.

The redesign of the pressurizer safety and relief valve piping has eliminated the water seals from the safety valve piping. The new piping configuration has been analyzed through the use of the RELAP-5 computer program to determine the loadings to which the piping will be subjected under steam discharge and also water discharge. The associated effects are then factored into the piping and support analysis. The liquid water relief rates used in the analysis were: 344,644 lb./hr for the PORVs and 420,000 lb./hr for the safety valves. These values were extracted from the EPRI reports as typical values for this application.

a. Results of Design Evaluation

A plant-specific overpressurization protection study (Reference 8), based upon WCAP-7769 methodology, has been performed to demonstrate that the sizing criteria employed in the design of the Seabrook safety valves is as conservative as that recommended in SRP 5.2.2.

Pressurizer safety valve sizing is a two-step process. Initially, assumptions are made as to the worst anticipated transient, and a valve size in excess of that required is chosen. Secondly, all of the anticipated overpressure transients are analyzed, using the selected valve capacity. If the results from all the transients show that ASME Code allowables are not exceeded, then the selected valve capacity is accepted.

The sizing transient is the loss of load transient with feedwater maintained. The same transient conducted with loss of feedwater does not result in as large a valve capacity required. It is observed that the maximum safety valve capacity (0.86, normalized) is less for the loss of feedwater transient than that required for the transient with feedwater maintained (0.90, normalized). In short, more safety valve capacity is required for the loss of load transient with feedwater maintained.

It is also observed that the Reactor Coolant System (RCS) is protected from overpressure regardless of reactor trip, assuming all safety valves function properly. Should the reactor trip at the first protection grade trip (high pressurizer pressure), then only 40 percent of the total valve capacity is required. This 40 percent capacity readily falls within that provided by two of the three safety valves. In conclusion, the RCS is adequately protected from overpressure with only two (of the three) safety valves if the reactor trips at the first protection grade trip setpoint.

A major change that shows up in the plant-specific analysis is the use of a rod motion delay-time of 2 seconds, instead of the 1 second used in the generic analysis. As the reactor heat exists for an additional second, the pressurizer pressure goes higher and, consequently, more valve capacity is used. This increased capacity is displayed in the plant specific overpressure protection report.

For example, the overpressure protection analysis for Seabrook shows that with a 2 second rod motion delay time following a loss of load transient tripping on high pressurizer pressure, a peak pressurizer pressure of approximately 2550 psia is reached. The valve capacity used is approximately 67 percent of capacity. (RCS pressure peaks at approximately 2640 psia.)

Rod motion delay time has less effect following the second reactor protection system trip setpoint. Hence, peak pressurizer pressure has already occurred and the pressure is declining. Any additional delays in tripping the reactor at this stage have no effect on the overpressure protection afforded the RCS. However, should feedwater be lost, the steam system may be overpressurized. This takes a considerable amount of time, however, and can be prevented by reactor trip from any of the trip functions.

Should pressurizer safety valve capacity available be less than 67 percent (2 of 3 valves), then RCS pressure will go higher. A large margin exists between the calculated peak RCS pressure and the ASME code allowable of 2750 psia (110 percent). The limiting cases of 2750 psia were calculated as part of the EPRI safety and relief valve test program and found to lie within 40-50 percent of total valve capacity. Thus, RCS pressure should not exceed 2750 psia unless the valve capacity available fell below 40-50 percent.

Chapter 15 presents the results of more recent analyses confirming the continuing capability of the pressurizer and steam generator safety valves to provide overpressure protection for an increased pressurizer pressure control error of 50 psi, positive Moderator Temperature Coefficient, 8% steam generator tube plugging, and increased safety valve setpoint tolerances.

Note: The Loss of Load/Turbine Trip analysis performed at SPU conditions demonstrates that the pressurizer safety valves were adequately sized and that peak RCS pressure remains <110% design.

5.2.2.3 Piping and Instrumentation Diagrams

Overpressure protection for the RCS is provided by pressurizer safety valves shown in Figure 5.1-1. These discharge to the pressurizer relief tank by common header.

The steam system safety valves are discussed in Chapter 10 and are shown on Figure 10.3-1.

5.2.2.4 Equipment and Component Description

The operation, significant design parameters, number and types of operating cycles, and environmental qualification of the pressurizer safety valves are discussed in Subsection 5.4.13.

A discussion of the equipment and components of the steam system overpressure system is provided in Section 10.3.

5.2.2.5 Mounting of Pressure Relief Devices

Design and installation details pertinent to the mounting of pressure relief devices are discussed in Subsection 3.9(B).3.3.

5.2.2.6 Applicable Codes and Classification

The requirements of ASME Boiler and Pressure Vessel Code, Section III, paragraphs NB-7300 (Overpressure Protection Report) and NC-7300 (Overpressure Protection Analysis), are followed and complied with for pressurized water reactor systems.

Piping, valves and associated equipment used for overpressure protection are classified in accordance with ANSI N18.2, "Nuclear Safety Criteria for the Design of Stationary Pressurized Water Reactor Plants." These safety class designations are delineated on Table 3.2-2 and shown on Figure 5.1-1.

For further information, refer to Section 3.9(N).

5.2.2.7 Material Specifications

Refer to Subsection 5.2.3 for a description of material specifications.

5.2.2.8 Process Instrumentation

Instrumentation is provided in the control room to give the open/closed status of the pressurizer safety and Power-Operated Relief Valves (PORVs). Each PORV is monitored by limit switches that operate red and green indicating lights on the main control board. The safety valves are monitored by an acoustic monitor that senses the acoustic emissions associated with flow in the discharge line that is common to the PORV and the three safety valves.

The above instrumentation is environmentally and seismically qualified and will actuate VAS alarms for PORV and/or safety valve open. The indication will not be redundant; therefore, backup indication and alarms are provided by temperature indication on the discharge of each safety valve and common discharge from the PORVs and by primary relief tank temperature, pressure, and level.

The instrumentation has been integrated into the Emergency Response Procedures (ERPs) and operator training. A determination of the needed characteristics of these displays to support the ERPs was made a part of the Detailed Control Room Design Review (DCRDR). A comparison was made of the needed characteristics against the available instrumentation, and no deficiencies were found.

5.2.2.9 System Reliability

The reliability of the pressure relieving devices is discussed in Section 4 of Reference 2.

5.2.2.10 Testing and Inspection

Testing and inspection of the overpressure protection components are discussed in Subsection 5.4.13.4 and Chapter 14.

5.2.2.11 RCS Pressure Control During Low Temperature Operation

Administrative procedures have been developed to aid the operator in controlling RCS pressure during low temperature operation. However, to provide a backup to the operator, the opening of any one of four valves would mitigate postulated inadvertent pressure excursions during water-solid (worst case) operations. Technical Specification 3.4.9.3, Overpressure Protection Systems, requires that two of these overpressure protections devices be operable at RCS cold leg temperatures below 225°F when the RCS is not depressurized and vented.

Two of the devices that provide protection against such postulated over-pressurization events are the two PORVs. The other two devices are the residual heat removal (RHRS) suction relief valves. Analyses have shown that one PORV or one RHRS suction relief valve is sufficient to prevent violation of pressure limits due to anticipated mass and heat input transients. The PORVs, when used to meet the technical specification requirements, are in automatic and armed. The RHRS suction relief valves are self-actuated.

The PORVs are powered by separate DC power sources; therefore, a single failure resulting in the loss of one DC bus will not disable both PORVs. Separate auctioneering circuits are provided for both the arming and actuating signals for each train. No single failure in the PORV power supply, the LTOP circuitry power supply, or the Cold Overpressure Mitigation System (COMS) circuitry itself will disable the automatic opening of both PORVs.

a. System Operation

Prior to alignment of the RCS to the RHRS, the two PORVs are utilized. The two pressurizer power-operated relief valves are each supplied with actuation logic to ensure that a redundant and independent RCS pressure control backup capability is available to the operator during low temperature operations. This system provides the capability for RCS inventory letdown, thereby maintaining RCS pressure within allowable limits. Refer to Section 7.6 and Subsections 5.4.7, 5.4.10, 5.4.13, and 9.3.4 for additional information on RCS pressure and inventory control during other modes of operation.

The basic function of the LTOP/COMS logic is to continuously monitor RCS temperature and pressure conditions whenever plant operation is at low temperatures. An auctioneered system temperature will be continuously converted to an allowable pressure and then compared to the actual RCS pressure. The system logic will first annunciate a main control board alarm whenever the measured pressure increases to within a predetermined amount of the allowable pressure, thereby indicating that a pressure transient is occurring, and on a further increase in measured pressure, an actuation signal will be transmitted to the power-operated relief valves and the PORV isolation valves when required to mitigate the pressure transient.

Once the RCS is aligned to the RHRS, the associated steam relief valves(s) are available for low temperature overpressure protection. These valves are spring-loaded and self-actuated. When both RHRS trains are aligned for shutdown cooling, redundancy is provided by the RHRS suction relief valves, and neither of the PORVs is required.

b. Operating Basis Earthquake (OBE) Evaluation

A fluid systems evaluation has been performed to analyze the potential for overpressure transients following on OBE. The basis of the evaluation assumes that the plant air system is inoperable since it is not seismically qualified. The results of the evaluation follow and demonstrate that overpressure transients following an OBE are not a concern.

1. A loss of plant air during the first part of plant cooldown, just prior to placing the RHRS on line at 350°F (i.e. decay heat removal via the steam generators, normal CVCS letdown), would cause the valves in the normal CVCS letdown path to fail closed and the charging flow control valve to fail open. These conditions would create a net mass addition to the RCS, thereby causing the pressure to increase. However, the pressure increase would be acceptable, since the pressurizer safety valves would limit system pressure to within allowable values.

2. A loss of plant air during the second part of plant cooldown (i.e. decay heat removal via the RHRS and a temperature less than 350°F) would cause the low pressure letdown valve in the residual heat removal to CVCS letdown path to fail closed and the charging flow control valve to fail open, similar to that discussed above. These conditions would create a net mass addition to the system which would be relieved by the solenoid-operated PORVs or the RHR relief valves which are set at 450 psig and, thus, maintain the pressure within allowable values.

For the various modes described above, the pressurizer PORVs, safety valves and RHRS relief valves provide pressure relief for the postulated transients following an OBE and, thus, maintain the primary system within the allowable pressure/temperature limits.

The Seabrook power-operated relief valves have been designed in accordance with the ASME Code to provide the integrity required for the reactor coolant pressure boundary. They have been analyzed for accident loads and for loads imposed by seismic events and have been shown to maintain their integrity.

c. Administrative Procedures

Although the pressure relieving devices described in Subsection 5.2.2.11a are designed to mitigate the pressure excursion and to address the allowable pressure limits, administrative procedures have been provided for minimizing the potential for any transient that could actuate the pressure relieving devices. The following discussion highlights these procedural controls, listed in hierarchy of their function in mitigating RCS cold overpressurization transients.

Of primary importance is the basic method of operation of the plant. Normal plant operating procedures will maximize the use of a pressurizer cushion (steam bubble) during periods of low pressure, low temperature operation. Water-solid operation is limited to mode 5 operation. It may be used for RCS fill and vent evolutions, or for crud bust cleanup operation prior to refueling evolutions. A pressurizer cushion dampens the plant's response to potential transient-generating inputs, thereby providing easier pressure control with the slower response rates.

An adequate cushion substantially reduces the severity of some potential pressure transients, such as reactor coolant pump-induced heat input, and slows the rate of pressure rise for others. In conjunction with the previously discussed alarms, this provides reasonable assurance that most potential transients can be terminated by operator action before the overpressure relief system actuates.

However, for those modes of operation when water-solid operation may still be possible, the following procedures will further highlight precautions to minimize the potential for developing an overpressurization transient:

1. Whenever the plant is water-solid and the reactor coolant pressure is being maintained by the low pressure letdown control valve, both high pressure letdown valves must be maintained open.

2. If all reactor coolant pumps have stopped for more than 5 minutes during plant heatup, and the reactor coolant temperature is greater than the charging and seal injection water temperature, no attempt shall be made to restart a pump unless a steam bubble is formed in the pressurizer. This precaution will minimize the pressure transient when the pump will be started and the cold water previously injected by the charging pumps will be circulated through the warmer reactor coolant components. The steam bubble will accommodate the resultant expansion as the cold water is rapidly warmed.

3. If all reactor coolant pumps are stopped and the RCS is being cooled down by the residual heat exchangers, a nonuniform temperature distribution may occur in the reactor coolant loops and the secondary side of the steam generators. No attempt shall be made to restart a reactor coolant pump unless (1) a steam bubble is formed in the pressurizer or (2) the secondary water temperature of each steam generator is less than 50°F above each of the RCS cold leg temperatures when the cold leg temperatures are less than or equal to 350°F.

4. During plant cooldown, all steam generators shall be connected to the steam header to assure a uniform cooldown of the reactor coolant loops.

5. At least one reactor coolant pump shall be maintained in service until the reactor coolant temperature is reduced to 160°F.

These special precautions back up the normal operational mode of maximizing periods of steam bubble operation so that cold overpressure transient prevention is continued during periods of transitional operations.

The specific plant configurations of emergency core cooling system testing and alignment will also highlight procedures required to prevent developing cold overpressurization transients. During these limited periods of plant operation, the following procedures shall be followed:

1. To preclude inadvertent emergency core cooling system actuation during heatup and cooldown, blocking is required of the low pressurizer pressure and low steam line pressure safety injection signal actuation logic at 1900 psig.

2. When RCS pressure has decreased below 1000 psig and approximately 425°F during plant cooldown, the SI accumulator isolation valves are closed to prevent injection of the accumulator's volume into the RCS as RCS pressure is reduced.

   This action involves energizing the MCCs powering the accumulators' MOV and then closing the valves. These actions are all performed in the control room.

Should a single failure disable the power supply to one or more of the SI accumulator isolation valves, solenoid operated vents are provided on each SI accumulator to allow relieving of the nitrogen overpressure gas to the Containment. These solenoids are Class 1E, powered by the emergency electrical train opposite that powering the SI accumulator isolation valve, and are operable from the control room and the remote shutdown location.

Additionally, during plant cooldown, one centrifugal charging pump, the positive displacement charging pump and both SI pumps will be made inoperable to preclude overpressurization events at low temperatures. This action can also be performed in the control room and the remote shutdown location.

Prior to decreasing RCS temperature below 350°F, the safety injection pumps and the nonoperating charging pumps are made inoperable. It should be noted that the high containment pressure safety injection actuation logic cannot be blocked.

3. Periodic emergency core cooling system pump performance testing requires the testing of the pumps during normal power operation or at hot shutdown conditions, to preclude any potential for developing a cold overpressurization transient.

   During shutdown conditions charging pump and SI pump operation are restricted in accordance with the Technical Specifications and their supporting bases.

4. "S" signal circuitry testing, if performed during cold shutdown, will also require RHRS alignment and power lockout of both SI pumps and nonoperating charging pump to preclude developing cold overpressurization transients.

   The above procedures, which will be followed for normal operations with a steam bubble, transitional operations where the Reactor Coolant System is potentially water-solid, and during specific testing operations, will provide in-depth cold overpressure prevention or reduction, thereby augmenting the installed Overpressure Relief System.

5.2.3 Reactor Coolant Pressure Boundary Materials

5.2.3.1 Material Specifications

Material specifications used for the principal pressure retaining applications in each component of the RCPB are listed in Table 5.2-2 for ASME Class 1 primary components and Table 5.2-3 for ASME Class 1 and 2 auxiliary components. Table 5.2-2 and Table 5.2-3 also include the unstabilized austenitic stainless steel material specifications used for components in systems required for reactor shutdown and for emergency core cooling.

The unstabilized austenitic stainless steel materials for the reactor vessel internals, which are required for emergency core cooling for any mode of normal operation or under postulated accident conditions and for core structural load bearing members, are listed in Table 5.2-4.

In some cases, the tables may not be totally inclusive of the material specifications used in the listed applications. However, the listed specifications are representative of those materials used.

The materials used conform with the requirements of the ASME Code, Section III, plus applicable addenda and Code cases.

The welding materials used for joining the ferritic base materials of the RCPB conform to, or are equivalent to, ASME Material Specifications SFA 5.1, 5.2, 5.5, 5.17, 5.18 and 5.20. They are qualified to the requirements of the ASME Code, Section III.

The welding materials used for joining austenitic stainless steel base materials of the RCPB conform to ASME Material Specifications SFA 5.4 and 5.9. They are qualified to the requirements of the ASME Code, Section III.

The welding materials used for joining nickel-chromium-iron alloy in similar base material combination and in dissimilar ferritic or austenitic base material combination conform to ASME Material Specifications SFA 5.11 and 5.14. They are qualified to the requirements of the ASME Code, Section III.

5.2.3.2 Compatibility with Reactor Coolant

a. Chemistry of Reactor Coolant

The Reactor Coolant System (RCS) chemistry specifications are identified in Technical Specification 3.9.1 and Technical Requirement TR30.

The RCS water chemistry is selected to minimize corrosion. A routinely scheduled analysis of the coolant chemical composition is performed to verify that the reactor coolant chemistry meets the specifications.

The Chemical and Volume Control System provides a means for adding chemicals to the RCS which control the pH of the coolant during pre-startup and subsequent operation, scavenge oxygen from the coolant during heatup, control radiolysis reactions involving hydrogen, oxygen and nitrogen during all power operations subsequent to startup, and modify the primary system corrosion films. The limits specified for chemical additives and reactor coolant impurities for power operation are described in the EPRI PWR Primary Water Chemistry Guidelines and implemented in the Chemistry Manual.

The pH control chemical employed is lithium hydroxide monohydrate, enriched in ^{7}Li isotope to 99.9 percent. This chemical is chosen for its compatibility with the materials and water chemistry of borated water/stainless steel/zirconium/Inconel systems. In addition, ^{7}Li is produced in solution from the neutron irradiation of the dissolved boron in the coolant. The lithium-7 hydroxide is introduced into the RCS via the charging flow. The solution is prepared in the laboratory and transferred to the chemical additive tank. Reactor makeup water is then used to flush the solution to the suction header of the charging pumps. The concentration of lithium-7 hydroxide in the RCS is maintained in the range specified for pH control. If the concentration exceeds this range, the cation bed demineralizer is employed in the letdown line in series operation with the mixed bed demineralizers.

During a reactor startup from a cold condition (i.e., following a refueling outage), hydrazine may be added to the coolant as an oxygen scavenging agent. The hydrazine is typically added prior to formation of a steam bubble in the pressurizer. This allows an excess of hydrazine to be present in the system for improved reaction kinetics to take place at higher RCS temperature. Oxygen limits are described in the EPRI PWR Primary Water Chemistry Guidelines and implemented in the Chemistry Manual.

The reactor coolant is treated with dissolved hydrogen to control the products formed by the decomposition of water by radiolysis. The hydrogen reacts with the oxygen to form water and prevent the oxygen from reacting with the nitrogen and forming nitric acid (HNO_3). The hydrogen overpressure is accomplished by a self-contained pressure control valve in the vapor space of the volume control tank. This valve can be adjusted to maintain the correct equilibrium hydrogen concentration.

Boron, in the chemical form of boric acid, is added to the RCS to accomplish long-term reactivity control of the core. The mechanism for the process involves the absorption of neutrons by the ^{10}B isotope of naturally occurring boron.

Suspended solids (corrosion product particulates) and other impurity concentrations are maintained below specified limits by controlling the chemical quality of makeup water and chemical additives and by purification of the reactor coolant through the CVCS mixed bed demineralizers.

During power operation when zinc addition is desired, an aqueous solution of zinc acetate is injected into the RCS via a sample system pipe that discharges to the VCT. The zinc concentration in the reactor coolant is maintained at less than or equal to 40 ppb. Zinc is incorporated into primary system material oxides in order to minimize plant dose rates, general corrosion, and localized corrosion.

b. Compatibility of Construction Materials with Reactor Coolant

All of the ferritic low alloy and carbon steels which are used in principal pressure-retaining applications are provided with corrosion resistant cladding on all surfaces that are exposed to the reactor coolant. The corrosion resistance of this cladding material is at least equivalent to the corrosion resistance of Types 304 and 316 austenitic stainless steel alloys or nickel-chromium-iron, martensitic stainless steel and precipitation-hardened stainless steel. The cladding on ferritic type base materials receives a post-weld heat treatment, as required by the ASME Code.

Ferritic low alloy and carbon steel nozzles are safe-ended with either stainless steel wrought materials, stainless steel weld metal analysis A-7 (designated A-8 in the 1974 Edition of the ASME Code), or nickel-chromium-iron alloy weld metal F-Number 43. The latter buttering material requires further safe-ending, with austenitic stainless steel base material after completion of the post-weld heat treatment, when the nozzle is larger than a 4 inch nominal inside diameter and/or the wall thickness is greater than 0.531 inches.

All of the austenitic stainless steel and nickel-chromium-iron alloy base materials with primary pressure-retaining applications are used in the solution-annealed heat treat condition. These heat treatments are as required by the material specifications.

During subsequent fabrication, these materials are not heated above 800°F, other than locally by welding operations. The solution-annealed surge line material is subsequently formed by hot bending, followed by a re-solution annealing heat treatment.

Components with stainless steel, sensitized in the manner expected during component fabrication and installation, will operate satisfactorily under normal plant chemistry conditions in pressurized water reactor systems because chlorides, fluorides and oxygen are controlled to very low levels.

c. Compatibility With External Insulation and Environmental Atmosphere

In general, all of the materials listed in Table 5.2-2 and Table 5.2-3, which are used in principal pressure-retaining applications and are subject to elevated temperature during system operation, are in contact with thermal insulation that covers their outer surfaces.

The thermal insulation used on the RCPB is either reflective stainless steel type or made of compounded materials that yield low leachable chloride and/or fluoride concentrations. The compounded materials in the form of blocks, boards, cloths, tapes, adhesives, cements, etc., are silicated to provide protection of austenitic stainless steels against stress corrosion which may result from accidental wetting of the insulation by spillage, minor leakage or other contamination from the environmental atmosphere. Section 1.8 includes a discussion which indicates the degree of conformance with Regulatory Guide 1.36, "Nonmetallic Thermal Insulation for Austenitic Stainless Steel."

In the event of coolant leakage, the ferritic materials will show increased general corrosion rates. Where minor leakage is anticipated from service experience, such as valve packing, pump seals, etc., only materials that are compatible with the coolant are used. These are shown in Table 5.2-2 and Table 5.2-3. Ferritic materials exposed to coolant leakage can be readily observed as part of the in-service visual and/or nondestructive inspection program to assure the integrity of the component for subsequent service.

5.2.3.3 Fabrication and Processing of Ferritic Materials

a. Fracture Toughness

The fracture toughness properties of the primary components meet the requirements of the ASME Code, Section III, paragraph NB-2300.

The fracture toughness properties of the reactor vessel materials are discussed in Section 5.3.

Limiting steam generator and pressurizer RT_{NDT} temperatures are guaranteed at 60°F for the base materials and the weldments. These materials at 120°F will meet the 50 ft-lbs. absorbed energy and 35 mils lateral expansion requirements of the ASME Code Section III. The actual results of these tests are provided in the ASME material data reports which are supplied for each component and submitted to Public Service Company of New Hampshire at the time of shipment of the component.

Calibration of temperature and charpy impact test machines are performed to meet the requirements of the ASME Code, Section III, paragraph NB-2360.

Westinghouse has conducted a test program to determine the fracture toughness of low alloy ferritic materials with specified minimum yield strengths greater than 50,000 pounds per square inch (psi), to demonstrate compliance with Appendix G of the ASME Code, Section III. In this program, fracture toughness properties were determined and shown to be adequate for base metal plates and forgings, weld metal and heat-affected zone metal for higher strength ferritic materials used for components of the RCPB. The results of the program are documented in Reference 1 which was submitted to the NRC via Reference 4.

b. Control of Welding

All welding is conducted using procedures qualified according to the rules of Sections III and IX of the ASME Code. Control of welding variables, as well as examination and testing during procedure qualification and production welding, is performed in accordance with ASME Code requirements.

Section 1.8 includes discussions which indicate the degree of conformance of the ferritic materials components of the RCPB with Regulatory Guides 1.34, "Control of Electroslag Properties"; 1.43, "Control of Stainless Steel Weld Cladding of Low Alloy Steel Components"; 1.50, "Control of Preheat Temperature for Welding of Low-Alloy Steel"; and 1.71, "Welder Qualification for Areas of Limited Accessibility."

5.2.3.4 Fabrication and Processing of Austenitic Stainless Steel

Subsections 5.2.3.4a to 5.2.3.4e address Regulatory Guide 1.44, "Control of the Use of Sensitized Stainless Steel," and present the methods and controls used by Westinghouse to avoid sensitization and to prevent intergranular attack of austenitic stainless steel components. The subject of austenitic stainless steel for use in ESF applications, is addressed by UE&C in Subsection 6.1(B).1, Metallic Materials. Also, Section 1.8 includes a discussion which indicates the degree of conformance with Regulatory Guide 1.44.

a. Cleaning and Contamination Protection Procedures

It is required that all austenitic stainless steel materials used in fabrication, installation, and testing of nuclear steam supply components and systems be handled, protected, stored, and cleaned according to recognized and accepted methods which are designed to minimize contamination which could lead to stress corrosion cracking. The rules covering these controls are stipulated in Westinghouse process specifications. As applicable, these process specifications supplement the equipment specifications and purchase order requirements for austenitic stainless steel components or systems which Westinghouse procures for the Seabrook NSSS, regardless of the ASME Code classification. They are also given to United Engineers and Constructors and to Public Service Company of New Hampshire for their information.

The process specifications which define these requirements and which follow the guidance of ANSI N-45 committee specifications are as follows:

82560HM	Requirements for Pressure Sensitive Tapes for Use on Austenitic Stainless Steel
83336KA	Requirements for Thermal Insulation Used on Austenitic Stainless Steel Piping and Equipment
83860LA	Requirements for Marking of Reactor Plant Components and Piping
84350HA	Site Receiving Inspection and Storage Requirements for Systems, Material and Equipment
84351NL	Determination of Surface Chloride and Fluoride on Austenitic Stainless Steel Materials
85310QA	Packaging and Preparing Nuclear Components for Shipment and Storage
292722	Cleaning and Packaging Requirements of Equipment for Use in the NSSS
597756	Pressurized Water Reactor Auxiliary Tanks Cleaning Procedures
597760	Cleanliness Requirements During Storage Construction, Erection and Start-Up Activities of Nuclear Power System.

Section 1.8 includes a discussion which indicates the degree of conformance of the austenitic stainless steel components of the RCPB with Regulatory Guide 1.37, "Quality Assurance Requirements for Cleaning of Fluid Systems and Associated Components of Water-Cooled Nuclear Power Plants."

b. Solution Heat Treatment Requirements

The austenitic stainless steels listed in Table 5.2-2, Table 5.2-3 and Table 5.2-4 are utilized in the final heat treated condition required by the respective ASME Code Section II materials specification.

c. Material Inspection Program

The Westinghouse practice is that austenitic stainless steel materials of product forms with simple shapes need not be corrosion tested provided that the solution heat treatment is followed by water quenching. Simple shapes are defined as all plates, sheets, bars, pipe and tubes, as well as forgings, fittings, and other shaped products which do not have inaccessible cavities or chambers that would preclude rapid cooling when water quenched. When testing is required, the tests are performed in accordance with ASTM A262, Practice A or E, as amended by Westinghouse Process Specification 84201 MW.

d. Prevention of Intergranular Attack of Unstabilized Austenitic Stainless Steels

Unstabilized austenitic stainless steels are subject to intergranular attack (IGA), provided that three conditions are present simultaneously. These are:

1. An aggressive environment, e.g., an acidic aqueous medium containing chlorides or oxygen
2. A sensitized steel
3. A high temperature.

If any one of the three conditions described above is not present, intergranular attack will not occur. Since high temperatures cannot be avoided in all components in the NSSS, Westinghouse relies on the elimination of conditions 1 and 2 to prevent intergranular attack on wrought stainless steel components.

The water chemistry in the RCS of a Westinghouse pressurized water reactor is rigorously controlled to prevent the intrusion of aggressive species. In particular, the maximum permissible oxygen and chloride concentrations are 0.005 ppm and 0.15 ppm, respectively. Reference 5 describes the precautions taken to prevent the intrusion of chlorides into the system during fabrication, shipping, and storage. The use of hydrogen over-pressure precludes the presence of oxygen during operation. The effectiveness of these controls has been demonstrated by both laboratory tests and operating experience. The long time exposure of severely sensitized stainless steel in early plants to PWR coolant environments has not resulted in any sign of intergranular attack. Reference 5 describes the laboratory experimental findings and the Westinghouse operating experience. The additional years of operations since the issuing of Reference 5 have provided further confirmation of the earlier conclusions.

Severely sensitized stainless steels do not undergo any intergranular attack in Westinghouse pressurized water reactor coolant environments. In spite of the fact there never has been any evidence that PWR coolant water attacks sensitized stainless steels, Westinghouse considers it good metallurgical practice to avoid the use of sensitized stainless steels in the NSSS components. Accordingly, measures are taken to prohibit the purchase of sensitized stainless steels and to prevent sensitization during component fabrication. Wrought austenitic stainless steel stock used for components that are part of (1) the RCPB, (2) systems required for reactor shutdown, (3) systems required for emergency core cooling, and (4) reactor vessel internals (relied upon to permit adequate core cooling for normal operation or under postulated accident conditions) is used in one of the following conditions:

1. Solution-annealed and water quenched, or
2. Solution-annealed and cooled through the sensitization temperature range within less than approximately five minutes.

   It is generally accepted that these practices will prevent sensitization. Westinghouse has verified this by performing corrosion tests on as-received wrought material.

Westinghouse recognizes that the heat-affected zones of welded components must, of necessity, be heated into the sensitization temperature range, 800 to 1500°F. However, severe sensitization, i.e., continuous grain boundary precipitates of chromium carbide, with adjacent chromium depletion, can still be avoided by control of welding parameters and welding processes. The heat input* and associated cooling rate through the carbide precipitation range are of primary importance. Westinghouse has demonstrated this by corrosion testing a number of weldments.

Of 25 production and qualification weldments tested, representing all major welding processes and a variety of components, and incorporating base metal thicknesses from 0.10 to 4.0 inches, only portions of two were severely sensitized. Of these, one involved a heat input of 120,000 joules, and the other involved a heavy socket weld in relatively thin-walled material. In both cases, sensitization was caused by high heat inputs relative to the section thickness. However, in only the socket weld did the sensitized condition exist at the surface, where the material is exposed to the environment; a material change has been made to eliminate this condition.

Westinghouse controls the heat input in all austenitic pressure boundary weldments by:

1. Prohibiting the use of block welding
2. Limiting the maximum interpass temperature to 350°F
3. Exercising approval rights on all welding procedures.

---

* NOTE: Heat input is calculated according to the formula:

$$H = \frac{(E)(I)(60)}{S}$$

Where:

H = joules/in
E = volts
I = amperes
S = travel speed (in/min)

To further assure that these controls are effective in preventing sensitization, Westinghouse will, if necessary, conduct additional intergranular corrosion tests of qualification mockups of primary pressure boundary and core internal component welds, including the following:

1. Reactor Vessel Safe Ends
2. Pressurizer Safe Ends
3. Surge Line and Reactor Coolant Pump Nozzles
4. Control Rod Drive Mechanisms Head Adaptors
5. Control Rod Drive Mechanisms Seal Welds
6. Control Rod Extensions
7. Lower Instrumentation Penetration Tubes.

To summarize, Westinghouse has a four point program designed to prevent intergranular attack of austenitic stainless steel components.

1. Control of primary water chemistry to ensure a benign environment.
2. Utilization of materials in the final heat-treated condition, and the prohibition of subsequent heat treatments in the 800 to 1500°F temperature range.
3. Control of welding processes and procedures to avoid heat-affected zone (HAZ) sensitization.
4. Confirmation that the welding procedure used for the manufacture of components in the primary pressure boundary and of reactor internals do not result in the sensitization of heat-affected zones.

Both operating experience and laboratory experiments in primary water have conclusively demonstrated that this program is 100 percent effective in preventing intergranular attack in Westinghouse NSSS's utilizing unstabilized austenitic stainless steel.

e. Retesting Unstabilized Austenitic Stainless Steels Exposed to Sensitization Temperatures

It is not normal Westinghouse practice to expose unstabilized austenitic stainless steels to the sensitization range of 800 to 1500°F during fabrication into components. If, during the course of fabrication, the steel is inadvertently exposed to the sensitization temperature range, 800 to 1500°F, the material may be tested in accordance with ASTM A262, Practice A or E, as amended by Westinghouse Process Specification 84201 MW, to verify that it is not susceptible to intergranular attack, except that testing is not required for:

1. Cast metal or weld metal with a ferrite content of five percent or more
2. Material with carbon content of 0.03 percent or less that is subjected to temperatures in the range of 800 to 1500°F for less than one hour
3. Material exposed to special processing, provided the processing is properly controlled to develop a uniform product and provided that adequate documentation exists of service experience and/or test data, to demonstrate that the processing will not result in increased susceptibility to intergranular stress corrosion.

   If it is not verified that such material is not susceptible to intergranular attack, the material will be re-solution annealed and water quenched or rejected.

f. Control of Welding

The following paragraphs address Regulatory Guide 1.31, "Control of Stainless Steel Welding," and present the methods used, and the verification of these methods, for austenitic stainless steel welding.

The welding of austenitic stainless steel is controlled to mitigate the occurrence of microfissuring or hot cracking in the weld. Although published data and experience have not confirmed that fissuring is detrimental to the quality of the weld, it is recognized that such fissuring is undesirable in a general sense. Also, it has been well documented in the technical literature that the presence of delta ferrite is one of the mechanisms for reducing the susceptibility of stainless steel welds to hot cracking. However, there is insufficient data to specify a minimum delta ferrite level below which the material will be prone to hot cracking. It is assumed that such a minimum lies somewhere between 0 and 3 percent delta ferrite.

The scope of these controls discussed here encompasses welding processes used to join stainless steel parts in components designed, fabricated or stamped in accordance with ASME Code, Section III, Class 1 and 2, and core support components. Delta ferrite control is appropriate for the above welding requirements, except where no filler metal is used or for other reasons such control is not applicable. These exceptions include electron beam welding, autogenous gas-shielded tungsten arc welding, explosive welding, and welding using fully austenitic welding materials.

The fabrication and installation specifications require welding procedure and welder qualification in accordance with the ASME Code, Section III, and include the delta ferrite determinations for the austenitic stainless steel welding materials that are used for welding qualification testing and for production processing. Specifically, the undiluted weld deposits of the "starting" welding materials are required to contain a minimum of 5 percent delta ferrite (the equivalent ferrite number may be substituted for percent delta ferrite), as determined by chemical analysis and calculation using the appropriate weld metal constitution diagrams. When new welding procedure qualification tests are evaluated for these applications, including repair welding of raw materials, they are performed in accordance with the requirements of Section III and Section XI of the ASME Code.

The results of all the destructive and nondestructive tests are reported in the procedure qualification record, in addition to the information required by ASME Code, Section III.

The "starting" welding materials used for fabrication and installation welds of austenitic stainless steel materials and components meet the requirements of ASME Code, Section III. The austenitic stainless steel welding material conforms to ASME weld metal analysis A-7, (designated A-8 in the 1974 Edition of the ASME Code), Type 308 or 308L for all applications. Bare weld filler metal, including consumable inserts, used in inert gas welding processes conform to ASME SFA-5.9, and are procured to contain not less than 5 percent delta ferrite according to ASME Code, Section III. Weld filler metal materials used in flux shielded welding processes conform to ASME SFA-5.4 or SFA-5.9, and are procured in a wire-flux combination to be capable of providing not less than 5 percent delta ferrite in the deposit according to the ASME Code, Section III. Welding materials are tested using the welding energy inputs to be employed in production welding.

Combinations of approved heat and lots of "starting" welding materials are used for all welding processes. The welding quality assurance program includes identification and control of welding material by lots and heats, as appropriate. All of the weld processing is monitored according to approved inspection programs which include review of "starting" materials, qualification records, and welding parameters. Welding systems are also subject to quality assurance audit including calibration of gages and instruments, identification of "starting" and completed materials, welder and procedure qualifications, availability and use of approved welding and heat treating procedures, and documentary evidence of compliance with materials, welding parameters and inspection requirements. Fabrication and installation welds are inspected using nondestructive examination methods according to the ASME Code, Section III, rules.

To assure the reliability of these controls, Westinghouse has completed a delta ferrite verification program, described in Reference 6, that has been approved as a valid approach to verify the Westinghouse hypothesis and is considered an acceptable alternative for conformance with the NRC Interim Position of Regulatory Guide 1.31. The Regulatory Staff's acceptance letter and topical report evaluation were received on December 30, 1974. The program results, which do support the hypothesis presented in Reference 6, are summarized in Reference 7.

Section 1.8 includes discussions which indicate the degree of conformance of the austenitic stainless steel components of the RCPB with Regulatory Guides 1.34, "Control of Electroslag Properties," and 1.71, "Welder Qualification for Areas of Limited Accessibility."

5.2.4 In-Service Inspection and Testing of Reactor Coolant Pressure Boundary

Components of the reactor coolant pressure boundary are designed, fabricated and erected in such a way as to comply with the requirements of Section XI of the ASME Boiler and Pressure Vessel Code.

5.2.4.1 System Boundary Subject to Inspection

The system boundary (ASME Section III Class 1 components) subject to in-service inspection includes the following:

a. Reactor pressure vessel; including shell, heads, cladding, nozzles, penetrations and supports

b. Steam generators, primary side; including heads, nozzles and supports

c. Reactor coolant pumps; including pump bodies, nozzles and supports

d. Pressurizer vessel; including heads, body shell, nozzles and skirt

e. Reactor coolant piping; including the loop piping, pressurizer surge line, pressurizer spray line, valves and supports. (See Table 5.2-6 for the list of lines and Table 5.2-7 for the list of valves that form the reactor coolant pressure boundary, along with items a through d above.)

5.2.4.2 Accessibility

All components have been arranged to provide the maximum possible clearances for access for in-service inspection, consistent with the design and function of the plant, and in accordance with the requirements of IWA-1500 of Section XI of the Code.

In-service inspection of the reactor vessel is described in Subsections 5.3.1.6 and 5.3.3.7. In-service inspection of the steam generator is described in Subsection 5.4.2.5 and for the pressurizer in Subsection 5.4.10.4. Piping systems requiring volumetric (ultrasonic) in-service inspection are designed to provide access for inspection, and pipe welds are smoothed and contoured to permit effective use of the inspection equipment (see Figure 5.2-1).

Access for in-service inspection of major NSSS equipment, other than the reactor pressure vessel, has been facilitated as follows:

a. Manways have been provided in the steam generator channel head to permit internal inspection of the steam generator.

b. A manway has been provided in the pressurizer top head to allow access for internal inspection of the pressurizer.

c. The insulation covering all inspectable equipment and piping welds is designed for easy removal and replacement to facilitate weld inspection and repair, if necessary, and to provide adequate access for surface and volumetric examination.

d. The floor above the reactor coolant pumps has been provided with removable plugs to permit removal and installation of the pump motor, and to allow internal inspection of the pumps.

e. The reactor coolant loop compartments have been designed to permit personnel access during refueling outages, to permit direct inspection of the external sections of the piping and components.

f. Platforms and ladders have been strategically located to provide access to valves and other components for convenience in operation and maintenance. These platforms and ladders will facilitate in-service inspection.

5.2.4.3 Examination Techniques and Procedures

In general, except for the reactor pressure vessel, in-service inspection is performed using manual techniques wherever possible. In those few cases where plant configuration and radiation level make manual inspection undesirable, automated techniques are used. The baseline inspection uses the same procedures and type of equipment used for in-service inspection to verify the adequacy of procedures and equipment.

The reactor pressure vessel shell is inspected using an automated inspection device, as are the shell-to-nozzle welds and the inner surface of the nozzles. The upper head welds are examined using manual techniques. For details of reactor pressure vessel inspection, refer to Subsection 5.3.3.7 and Chapter 16. The remote inspection equipment is tested and proven adequate prior to its use for baseline inspection.

For details of inspection of the steam generators, refer to Subsection 5.4.2.5.

Laydown areas are provided for storage of removed components and racks; stands are provided to facilitate examination of removed components. Hoists and other handling equipment are provided in strategic locations for use during in-service inspection.

The visual examination employed as a basis for the report on the general condition of the parts, components or surfaces includes such conditions as scratches, wear, cracks, corrosion or erosion of surfaces, misalignment, deformation or leakage.

5.2.4.4 Inspection Intervals

Inspection intervals are ten years, and are in accordance with IWA-2400 of Section XI of the ASME Code, Plan B. See Chapter 16 for details of the in-service inspection plan. All inspections required by IWA-2500 will be completed by the end of each 10-year interval.

It is planned that the required in-service inspection will be accomplished during normal plant maintenance and refueling shutdown periods.

During the first of the inspection intervals, at least 16 percent of the required inspections, and not more than 34 percent, will be completed. By the end of the second of the interval, at least 50 percent and not more than 67 percent of the required inspections will be completed. The remaining inspections will be completed by the end of the 10-year interval.

5.2.4.5 Examination Categories and Requirements

In-service inspection categories and requirements are defined in Section XI of the Code for specific code classes. A detailed description of the means used to meet these requirements is given in Chapter 16. In general, Seabrook categories are identical with IWB-2500 of the Code, and requirements are the same as IWB-2000 of the Code.

5.2.4.6 Evaluation of Examination Results

All records of preservice and subsequent inspections are filed and maintained. Data from the subsequent examinations is compared with the baseline data from the preservice examination, and the comparisons are evaluated in accordance with IWB-3000 of the Code.

5.2.4.7 System Leakage and Hydrostatic Pressure Tests

System hydrostatic and leakage tests are performed and the test records are stored and maintained for the service life of the component or system, in accordance with IWA-1400 of Section XI, to provide a current status of each component. If repairs are necessary, a new baseline will be performed for the repair. The system leakage test will normally be conducted concurrently with the system hydrostatic test.

The requirements of IWB-5200 will be met. If test temperatures are required to be above 100°F, then system test pressure reduction will conform to the table in IWB-5200.

5.2.5 Detection of Leakage through Reactor Coolant Pressure Boundary

The leakage detection systems comply with applicable parts of NRC General Design Criterion 30 and Regulatory Guide 1.45. These systems provide a means of detecting, to the extent practical, leakage from the reactor coolant pressure boundary (RCPB).

5.2.5.1 Collection of Identified Leakage

The identified leakage within the Containment that is expected from the components of the RCPB, such as valve stem packing glands, reactor coolant pump shaft seals and other equipment that cannot practically be made completely leak-tight, is piped off to tanks as described below. The leakage rates from these components are monitored by temperature and flow instruments during plant operation. The sources of leakages are identified through the specific instrumentation provided in each line. Refer to Figure 5.2-2 Sheets 1 and 2 for details.

a. Reactor Coolant Drain Tank (RCDT)

The leakage directed to the RCDT includes the following sources:

1. Valve stem leakoffs
2. Reactor coolant pump seal (No. 2) leakage
3. Reactor flange leakoff
4. Excess letdown.

b. Pressurizer Relief Tank (PRT)

The PRT condenses and cools the discharge from the pressurizer safety and relief valves. Discharge from the smaller relief valves located inside the Containment is also piped to the PRT.

5.2.5.2 Unidentified Leakage to Containment

The majority of leakage from sources within the reactor containment is ultimately collected in the containment drainage sumps. Drainage trenches on the floor of the containment channel leakages and condensation to the sump. The leakage rates can be established and monitored during plant operation. Unidentified leakage to the containment atmosphere is kept to a minimum to permit the leakage detection systems to detect positively and rapidly a small increase in the leakage. Identified and unidentified leakages are separated so that a small unidentified leakage will not be masked by a comparatively larger identified leakage.

5.2.5.3 Leakage Detection Methods

The RCPB leakage detection is implemented by using continuous monitoring methods and/or a periodic RCS water inventory balance method. These methods provide a means for detection of both identified and unidentified leakage. Figure 5.2-2 identifies the various monitoring instruments employed for this purpose.

a. Design Bases

The following design bases were established to satisfy the requirements of General Design Criterion 30 for design diversity and redundancy for the RCPB leak detection systems.

1. Leakage to the atmosphere from systems containing radioactive fluid, which would result in an increase in overall containment radioactivity levels, is detected by the use of airborne radioactivity monitors.
2. Indications of an increase in local temperature from any source releasing hot liquid to the atmosphere are provided by air temperature monitors.
3. Temperature monitors are provided to indicate temperature flux vs. flow of leakage in drainage and relief lines and tanks, e.g., reactor vessel flange, pump seal and primary valve leakoffs which discharge to the RCDT and the PRT.
4. Liquid level monitors are provided for drainage sumps and tanks to monitor the leakage.
5. The systems are designed to reliably annunciate increasing leakages. The radiation monitors are provided with failure alarms that will indicate any instrument troubles.
6. The monitors provided shall supply sufficient information to enable deduction of leakage rates, differentiation, identification and general location of leaks.

b. Monitoring System

The Reactor Coolant Leakage Monitoring Systems consist of the following instrumentation.

1. Containment Drainage Sump Liquid Inventory Monitor

As indicated in Subsection 5.2.5.2, leakage is collected in containment drainage sumps. Sump level monitoring is provided to inventory the drainage handled. Level switches are used to maintain the sump level between predetermined levels by cycling the sump pump. Leaks are indicated by the computer log and trend of the sump level and pump operation. Continuous sump level monitoring is available in the main control room.

2. Containment Airborne Radioactivity Monitors

Channel 6526 monitors a sample drawn from the containment atmosphere for particulate and gaseous radioactivity. Iodine monitoring may be done in batch mode by analyzing the charcoal cartridge periodically in the laboratory. A sample which is representative of the containment atmosphere is drawn by an integral pumping system, from containment to a moving paper particulate filter, an iodine cartridge and a noble gas chamber. The air sample is then discharged back to the Containment. One radiation detector is used to monitor the particulate filter and the second radiation detector monitors the noble gas. Also provided is a backup gaseous radiation monitor, 6548, which is located within the Containment at zero feet elevation to monitor containment atmosphere for noble gas. The detectors are of Beta Scintillator type. The detector outputs are converted into microcuries per cubic centimeter by the microprocessor.

3. DELETED

4. Reactor Vessel Flange Leakoff

The reactor flange and head are sealed by two metallic 0-rings. Leakoff connections are provided between the 0-rings and beyond the outer 0-ring. The leakage is piped to the RCDT. A high temperature measurement by an RTD mounted in the piping indicates the reactor coolant leakage.

5. Reactor Coolant Drain Tank

   The various sources of leakage to the RCDT are identified in Subsection 5.2.5.1a. The RCDT is provided with temperature, pressure and level indications by which leakage is determined.

6. Reactor Coolant Pump Seal Leakoff

   Refer to Subsection 5.4.1.3 for a complete discussion of the reactor coolant pump shaft seal leakage. Seal water enters the pumps through a connection on the thermal barrier flange, and is directed to a plenum between the thermal barrier housing and the shaft. Here the flow splits: a portion flows down the shaft to cool the bearing and enters the RCS; the remainder flows up the shaft through the No. 1 seal, a controlled leakage seal. After passing through the seal, most of the flow leaves the pump via the No. 1 seal leakoff line. Minor flow passes through the No. 2 seal and leakoff line. This flow is indicated by the Main Plant Computer. A back flush injection from a head tank flows into the No. 3 seal between its "double dam" seal area. At this point, the flow divides with half flushing through one side of the seal and out the No. 2 seal leakoff while the remaining half flushes through the other side and out the No. 3 seal leakoff which uses a standpipe. Excessive leakage is piped to containment sump A. A high level of the upper standpipe is alarmed, indicating excess leakage.

7. Pressurizer Relief Tank (PRT)

   The leakages directed to PRT are identified in Subsection 5.2.5.1b. During normal operation, the leakage to the PRT is expected to be negligible, since all the valves are designed to minimize leakage at the normal system operating pressure. Temperature detectors are provided in the discharge piping of each valve to indicate possible leakage. PRT level, temperature and pressure indications and alarms are provided to indicate the leakage.

8. Containment Ambient Temperature Monitors

   Platinum resistance temperature detectors are strategically located throughout the Containment to detect local temperature changes and will assist in localizing a leak.

c. RCS Water Inventory Balance

The periodic RCS water inventory balance is designed to be conducted during steady state conditions with minimal T_{avg} variance. In the course of this inventory, the following parameters are monitored:

1. Time
2. T_{avg}
3. Pressurizer Level
4. VCT Level
5. PRT Level
6. RCDT Level
7. BA Flow Totalizer.

Changes in inventory due to sampling, draining, and steam generator tube leakage are accounted for separately. During the conduct of this inventory, every effort is made to avoid additions to the RCS, pump down of the RCDT, or diversion of letdown from the VCT.

Changes in the parameters are calculated over a convenient time period (the longer the period the more accurate the results). The inventory change rate is determined by summing the volume change associated with each parameter and dividing this value by the time interval. The difference between the containment sump leakage rate and the inventory change rate will indicate leakage from sources other than the primary system.

5.2.5.4 Intersystem Leakage Detection

The following three types of detection methods are employed to monitor systems connected with the RCPB for signs of intersystem leakage:

a. Primary Component Cooling Water System Radiation Monitors

These are gamma sensitive scintillation detectors. Liquid sample is drawn from the discharge side of the primary component cooling water pumps and returned back to the suction side. This system monitors primary component cooling water for radioactivity indicative of a leak from the Reactor Coolant System or from one of the radioactive systems which exchanges heat with the Primary Component Cooling System. These detectors are provided with the relevant flow information to obtain the radioactivity in terms of microcuries per cubic centimeter.

b. Condenser Air Evacuation Monitors

This method is employed for detection of steam generator tube leaks. Noble gases present in the steam generator tube or tube sheet coolant leakage leave solution in the steam generator and are ultimately vented along with other noncondensables. This detector is a gross beta scintillator. The detector is directly mounted in the discharge line of the three air evacuation pumps.

c. Steam Generator Blowdown Sample Monitors

These monitors provide indications of primary to secondary leaks in the steam generators by analyzing the liquid phases of the four steam generator secondary sides. These are of the gamma sensitive scintillation type. Pressures and temperatures are reduced for detection purposes.

5.2.5.5 Sensitivity and Response Time of Detectors

The sensitivity and response time of each leakage detection method provided to comply with the guidance in Regulatory Guide 1.45, position C.5 for detecting unidentified leakage to the Containment is discussed below.

a. Containment Drainage Sump Inventory Monitoring

Normal leakage from all the unidentified sources within the Containment is estimated to be in the range of 20 to 40 gallons per day. RCPB leaks on the order of 1 gpm are very large in comparison and are easily detected by log and trend of containment sump level.

Additionally, the level transmitters have sufficient resolutions to detect change in level due to a flow of as little as 1 gpm. Leakages of the order of 0.05 gpm are detected in a few hours with the expected background leakage. Leakage of 1 gpm can be detected in less than 60 minutes. The drainage sump instrumentation system has a sensitivity of 1 inch and an accuracy of ±5 percent.

b. Containment Air Particulate Monitor

The containment air particulate monitor is one of the most sensitive instruments available for detection of reactor coolant leakage into the Containment. The containment air particulate monitor has a sensitivity of 10^{-10} μCi/cc and an accuracy of ±20 percent. The measuring range is 10^{-10} to 10^{-6} μCi/cm^3. The response time is the shortest where the baseline leakage is low. The baseline airborne activity is kept low by adjusting the valve packings and pump seals properly. The air particulate monitor is capable of detecting leakage of 1 gpm in less than 60 minutes, if the reactor is operating with 0.12 percent fuel defects (reference Subsection 11.1.7.1) and a coolant corrosion product level of 2.3×10^{-2} μCi/gm (reference Table 11.1-1), assuming baseline leakage activity of 1 percent per day of reactor coolant mass. However, during the initial period of operation, and following refueling when the coolant activity is low, response time will be longer than those of other types of monitors which do not rely on coolant activity for detection.

c. Containment Radioactive Gas Monitor

Gaseous activity in the containment atmosphere results from fission gases (various Kr and Xe isotopes) in coolant leakage and from Ar-41 produced by activation of air around the reactor vessel. The regular and backup gas monitors have a sensitivity of 10^{-6} μCi/cc and an accuracy of ± 20 percent. The range of the regular monitor is 10^{-6} to 10^{-2} μCi/cm^3, while the range of the backup monitor is 10^{-6} to 10^{-2} μCi/cc. The gas monitor is able to detect a leakage of 1 gpm in less than 60 minutes if the reactor is operated with 0.12 percent fuel defects (reference Subsection 11.1.7.1).

5.2.5.6 Seismic Capability

The containment airborne radioactivity monitor and containment drainage sump level instrumentation satisfies the seismic design requirements of Regulatory Guide 1.45. The gaseous radioactivity monitors and drainage sump level instrumentation are capable of performing their functions following seismic events that do not require plant shutdown. The airborne particulate monitor is designed to remain functional when subjected to a Safe Shutdown Earthquake (SSE).

5.2.5.7 Indicators and Alarms

Positive indication of RCPB leakage is provided in the main control room by the instruments located there, in association with the RCPB leakage detection subsystems. All indicators, recorders, annunciators and computer logs are readily available to the main control room operators. The operators are provided with the procedures for interpreting the indications to identify the leakage source, and with criteria for plant operation under leakage conditions.

Continuous sump level monitor is available to the plant computer. The computer monitors the sump level as well as the running of the sump pump in order to determine the leakage. Sump level high and low level alarms are also available.

For PRT and RCDT, temperature and level detectors are provided so that high and low level indications and high temperatures are alarmed. Temperature detectors are provided in the discharge piping of each safety and relief valve, reactor vessel flange leakoff piping, pressurizer vent, and reactor vessel head vent, to indicate possible leakage. Temperature detectors at various areas of containment monitor any high ambient temperature. These detectors provide the capability to indirectly detect RCS leakage and aid in locating the leakage source. Reactor vessel flange inner and outer seal leaks will be identified by a high temperature alarm in the main control room. High flow indication in Seal No. 2 leakoff and high level indication in stand pipe connected to Seal No. 3 will alert the control room operator to reactor coolant pump seal leaks.

For all radiation monitoring systems, local indication of activity and high level alarm are provided locally at the monitor. By means of the RDMS, indication and alarms are provided at the main control room. Equipment failure alarms are also available.

Indications and alarms from the containment airborne monitor are also provided at the main control room on control panel 1-MM-CP-180A.

5.2.5.8 Testing

Calibration and functional testing of the leak detection systems, i.e., sump level detection, containment air and particulate monitoring, will be performed prior to initial plant startup.

During normal plant operation, periodic readings of leakage detection system instrumentation will indicate leakage trends. Periodic inspection and calibration of leak detection instruments can be performed during normal operation and will ensure accuracy and dependability.

For all radiation monitors, a primary calibration is performed on a one-time basis, utilizing typical isotopes of interest to determine proper detector response. Secondary standard calibrations are performed with multiple radiation sources to confirm the channel sensitivity obtained on primary calibration. This single point calibration confirms the channel sensitivity. Each monitor has a diagnostic program built into its microprocessor. This program continuously conducts a diagnostic routine within the monitor and provides an alarm input to the RDMS when a failure is detected. Each monitor is equipped with a "check source" that is inserted upon the command of the RDMS. Each time the check source is inserted, the microprocessor measures and stores the effect of the check source and compares it to the previous reading to obtain an indication of calibration trends.

5.2.5.9 Technical Specification

The Technical Specification is provided in Section 3/4.4.6.

5.2.6 Reactor Coolant Vent System

5.2.6.1 Design Basis

The Reactor Coolant Vent System is designed to allow venting the large quantities of noncondensible gases that can be generated within the reactor following core damage. It provides a vent path to the containment atmosphere via the pressurizer relief tank to insure that noncondensible gases cannot accumulate in the core to the point where core cooling would be interrupted and further core damage occur.

The design temperature and pressure is the same as the Reactor Coolant System, i.e., 650°F and 2485 psig. Piping and valve material is stainless steel, Type 316. All material is compatible with the reactor coolant chemistry and will be fabricated and tested in accordance with SRP Subsection 5.2.3, "Reactor Coolant Pressure Boundary Materials."

5.2.6.2 System Description

This system (see Figure 5.1-2 and Figure 5.1-4) provides the capability to vent the Reactor Coolant System from two locations: the reactor vessel head and the pressurizer steam space. The vent valves will be manually operated from the control room. The function of these vents is to vent any noncondensible gases that may collect in the reactor vessel head and in the pressurizer following core damage.

a. Reactor Vessel Head Vent

The reactor vessel head vent consists of a single solenoid valve and a motor-operated valve in series. This vent ties into the reactor head vent line which is normally used to vent the vessel for vessel fill. A flow restricting orifice is provided immediately downstream of the tie-in to the normal vent line. Both valves are powered from the same train emergency power source.

b. Pressurizer Vent

The vent for the pressurizer steam space uses the two parallel, redundant, safety-grade PORVs. The PORVs are 3"x6" pilot-operated solenoid valves with redundant, direct position indication. Each PORV has its own motor-operated isolation valve.

The PORV and its associated isolation valve are both powered from the same emergency power electrical train. However, each PORV and its associated isolation valve are supplied by opposite train emergency power sources.

5.2.6.3 Safety Evaluation

The RCS vessel head vent piping and valves are Safety Class 1 and 2, seismic Category 1 up to, and including, the second isolation valve. A temperature detector is located immediately downstream of the second isolation valve for leakage detection.

The reactor vessel head vent line has two normally closed valves in series; therefore, a single failure which results in an inadvertent opening of one valve does not initiate venting. The line also contains an orifice on the vessel side of the isolation valves that restricts the flow rate from a pipe break downstream of the orifice to within the makeup capacity of the charging system. Therefore, a break in this line, downstream of the orifice, or an inadvertent actuation of the vent during normal operation does not constitute a LOCA, and does not require ECCS actuation. All piping and components downstream of the flow restricting orifice are Safety Class 2, and seismic Category I. The valve, piping and components downstream of the motor-operated valve are classified Non-Nuclear Safety (NNS).

This valve is designed to withstand the safe shutdown earthquake. In addition, there is no piping which might be affected by spray from a postulated break in the NNS portion of the piping (which is routed to the pressurizer relief tank).

The pressurizer vent consists of the normal pressurizer PORVs and their normally open, motor-operated isolation valves. While inadvertent operation of a PORV would result in RCS depressurization, the effects have been analyzed and are bounded by the analysis presented in Chapter 15 and do not represent an unreviewed safety question. All piping and components upstream of, and including, the PORVs are Safety Class 1 and seismic Category I. All other piping and components downstream of the PORVs are classified Non-Nuclear Safety.

All electrical equipment for both the reactor vessel vent and the pressurizer vent is Class 1E. Motive and control power supplies for these valves are also Class 1E. Equipment within the containment atmosphere is environmentally qualified to insure operability in a hostile environment resulting from an accident.

5.2.6.4 Instrumentation Requirements

Vent valve position indication is provided on the main control board. Inadvertent opening of the vent valves is detected by means of temperature detectors in the downstream piping, with alarm indication for the pressurizer vent path at the main control board.

5.2.6.5 Testing and Inspection

The safety class portions of the Reactor Coolant Vent System will receive the same inspection program as outlined for the reactor coolant loop piping, as defined in UFSAR Subsection 5.4.14.4.

5.2.6.6 Technical Specifications

The Technical Specifications for the RCS vent system include RCS vent system limiting conditions for operation as well as surveillance requirements.

5.2.7 References

1. WCAP-9292, "Dynamic Fracture Toughness of ASME SA508 Class 2a and ASME SA533 Grade A Class 2 Base and Heat Affected Zone Material and Applicable Weld Metal," March 1978.
2. Cooper, L., Miselis, V. and Starek, R.M., "Overpressure Protection for Westinghouse Pressurized Water Reactors," WCAP-7769, Revision 1, June 1972 (also letter NS-CE-622, dated April 16, 1975, C. Eicheldinger (Westinghouse) to D.B. Vassallo (NRC), Additional Information on WCAP-7769, Revision 1).
3. Burnett, T.W.T., et al., "LOFTRAN Code Description," WCAP-7907, October 1972.
4. Letter NS-CE-1730, dated March 17, 1978, C. Eicheldinger (Westinghouse) to J.F. Stolz (NRC).
5. Golik, M.A., "Sensitized Stainless Steel in Westinghouse PWR Nuclear Steam Supply Systems," WCAP-7735, August 1971.
6. Enrietto, J.F., "Control of Delta Ferrite in Austenitic Stainless Steel Weldments," WCAP-8324-A, June 1975.
7. Enrietto, J.F., "Delta Ferrite in Production Austenitic Stainless Steel Weldments," WCAP-8693, January 1976.
8. Letter NAH-1795, dated July 8, 1981, W. E. Wright (Westinghouse) to J. DeVincentis (YAEC) which transmitted a report by Brown, R.J., and Osborne, M.P., "Overpressure Protection Report for Seabrook Nuclear Power Plant Units 1 and 2," March 1981.

5.3 REACTOR VESSEL

5.3.1 Reactor Vessel Materials

5.3.1.1 Material Specifications

Material specifications are in accordance with the ASME Code requirements and are given in Subsection 5.2.3.

5.3.1.2 Special Processes Used For Manufacturing and Fabrication

a. The vessel is Safety Class 1. Design and fabrication of the reactor vessel is carried out in strict accordance with ASME Code, Section III, Class 1, requirements. The head flanges and nozzles are manufactured as forgings. The cylindrical portion of the vessel is made up of several shells, each consisting of formed plates joined by full penetration longitudinal weld seams. The hemispherical heads are made from dished plates. The reactor vessel parts are joined by welding, using the single or multiple wire submerged arc.

b. The use of severely sensitized stainless steel as a pressure boundary material has been prohibited, and has been eliminated by either a select choice of material or by programming the method of assembly.

c. The control rod drive mechanism head adaptor threads and surfaces of the guide studs are chrome-plated to prevent possible galling of the mated parts.

d. At all locations in the reactor vessel where stainless steel and Inconel are joined, the final joining beads are Inconel weld metal in order to prevent cracking.

e. Core region shells fabricated of plate material have longitudinal welds which are angularly located away from the peak neutron exposure experienced in the vessel, where possible.

f. The location of full penetration weld seams in the upper closure head and vessel bottom head are restricted to areas that permit accessibility during in-service inspection.

g. The stainless steel clad surfaces are sampled to assure that composition requirements are met.

h. Minimum preheat requirements have been established for pressure boundary welds using low alloy material. The preheat must be maintained either until (at least) an intermediate post-weld heat treatment is completed, or until the completion of welding. In the latter case, upon completion of welding, a low temperature (400°F minimum) post-weld heat treatment is applied for four hours, then the weldment is allowed to cool to ambient temperature. This practice is specified for all pressure boundary welds except for the installation of nozzles. For the primary nozzle to shell welds, the preheat temperature is maintained until a high temperature (greater than 800°F) post-weld heat treatment is applied in accordance with the requirements of the ASME Code, Section III. This method is followed because higher restraint stresses may be present in the nozzle-to-shell weldments.

i. The procedure qualification for cladding low alloy steel (SA-508, Class 2) requires a special evaluation to assure freedom from underclad cracking.

5.3.1.3 Special Methods for Nondestructive Examination

The nondestructive examination of the reactor vessel and its appurtenances is conducted in accordance with ASME Code, Section III, requirements; also numerous examinations are performed in addition to ASME Code, Section III, requirements. Nondestructive examination of the vessel is discussed in the following paragraphs and the reactor vessel quality assurance program is given in Table 5.3-2.

a. <u>Ultrasonic Examination</u>

1. In addition to the design code straight beam ultrasonic test, angle beam inspection over 100 percent of one major surface of plate material is performed during fabrication to detect discontinuities that may be undetected by the straight beam examination.

2. In addition to the ASME Code, Section III, nondestructive examination, all full penetration ferritic pressure boundary welds in the reactor vessel are ultrasonically examined during fabrication. This test is performed upon completion of the welding and intermediate heat treatment but prior to the final post-weld heat treatment.

3. After hydrotesting, all full penetration ferritic pressure boundary welds in the reactor vessel, as well as the nozzle to safe end welds, are ultrasonically examined. These inspections are also performed in addition to the ASME Code, Section III, nondestructive examinations.

b. Penetrant Examinations

The partial penetration welds for the control rod drive mechanism head adaptors and the bottom instrumentation tubes are inspected by dye penetrant after the root pass, in addition to code requirements. Core support block attachment welds are inspected by dye penetrant after the first layer of weld metal and after each ½ inch of weld metal. All clad surfaces and other vessel and head internal surfaces are inspected by dye penetrant after the hydrostatic test.

c. Magnetic Particle Examination

The magnetic particle examination requirements below are in addition to the magnetic particle examination requirements of Section III of the ASME Code.

All magnetic particle examinations of materials and welds are performed in accordance with the following:

Prior to the final post-weld heat treatment - only by the Prod, Coil or Direct Contact Method.

After the final post-weld heat treatment - only by the Yoke Method.

The following surfaces and welds are examined by magnetic particle methods. The acceptance standards are in accordance with Section III of the ASME Code.

1. Surface Examinations

   (a) Magnetic particle examination of all exterior vessel and head surfaces after the hydrostatic test.

   (b) Magnetic particle examination of all exterior closure stud surfaces and all nut surfaces after threading. Continuous circular and longitudinal magnetization is used.

   (c) Magnetic particle examination of inside diameter surfaces of carbon and low alloy steel products that have their properties enhanced by accelerated cooling. This inspection is performed after forming and machining (if performed) and prior to cladding.

2. Weld Examination

   Magnetic particle examination or ultrasonic examination of the weld metal buildup for vessel supports, welds attaching the closure head lifting lugs and refueling seal ledge to the reactor vessel after the first layer and each ½ inch of weld metal is deposited. All pressure boundary welds are examined after back chipping or back grinding operations.

5.3.1.4 Special Controls for Ferritic and Austenitic Stainless Steel

Welding of ferrite steels and austenitic stainless steels is discussed in Subsection 5.2.3. Subsection 5.2.3 includes discussions which indicate the degree of conformance with Regulatory Guides 1.44, "Control of the Use of Sensitized Stainless Steel" and 1.31, "Control of Stainless Steel Welding." Section 1.8 discusses the degree of conformance with Regulatory Guides 1.34, "Control of Electroslag Weld Properties," 1.43 "Control of Stainless Steel Weld Cladding of Low Alloy Steel Components," 1.50 "Control of Preheat Temperature for Welding of Low Alloy Steels," 1.71 "Welder Qualification for Areas of Limited Accessibility," and 1.99 "Effects of Residual Elements on Predicted Radiation Damage to Reactor Vessel Materials."

5.3.1.5 Fracture Toughness

Assurance of adequate fracture toughness of ferritic materials in the reactor coolant pressure boundary (ASME Code, Section III, Class 1 components) is provided by compliance with the requirements for fracture toughness testing included in NB-2300 to Section III of the ASME Code and Appendix G of 10 CFR 50.

The initial Charpy V-notch minimum upper shelf fracture energy levels for the reactor vessel beltline (including welds) are 75 foot-pounds, as required per Appendix G of 10 CFR 50. Materials having a section thickness greater than 10 inches with an upper shelf of less than 75 foot-pounds are evaluated with regard to effects of chemistry (especially copper content), initial upper shelf energy and fluence to assure that a 50 foot-pound shelf energy as required by Appendix G of 10 CFR 50 is maintained throughout the life of the vessel. The specimens are oriented as required by NB-2300 of Section III of the ASME Code. Fracture toughness data for the Seabrook Unit 1 reactor vessel materials is presented in Table 5.3-3. Details of the beltline material fracture toughness are given in Table 5.3-5 and Table 5.3-6.

5.3.1.6 Material Surveillance

In the surveillance program, the evaluation of the radiation damage is based on pre-irradiation testing of Charpy V-notch, tensile and ½ T (thickness) compact tension (CT) fracture mechanics test specimens. The program is directed toward evaluation of the effect of radiation on the fracture toughness of reactor vessel steels based on the transition temperature approach and the fracture mechanics approach. The program design was based on ASTM E185-79, "Recommended Practice for Surveillance Tests for Nuclear Reactor Vessels," and 10 CFR 50, Appendix H.

The reactor vessel surveillance program uses six specimen capsules. The capsules are located in guide baskets welded to the outside of the neutron shield pads, and are positioned directly opposite the center portion of the core. The capsules can be removed when the vessel head is removed and can be replaced when the internals are removed. The six capsules contain reactor vessel steel specimens, oriented both parallel and normal (longitudinal and transverse) to the principal rolling direction of the limiting base material located in the core region of the reactor vessel and associated weld metal and weld heat-affected zone metal. The six capsules contain 54 tensile specimens, 360 Charpy V-notch specimens (which include weld metal and weld heat-affected zone material), and 72 CT specimens. Archive material sufficient for two additional capsules will be retained.

Dosimeters, including Ni, Cu, Fe, Co-Al, Cd shielded Co-Al, Cd shielded Np-237, and Cd shielded U-238, are placed in filler blocks drilled to contain them. The dosimeters permit evaluation of the flux seen by the specimens and the vessel wall. In addition, thermal monitors made of low melting point alloys are included to monitor the maximum temperature of the specimens. The specimens ensure good thermal conductivity. The complete capsule is helium leak tested. As part of the surveillance program, a report of the residual elements in weight percent to the nearest 0.01 percent will be made for surveillance material and as-deposited weld metal.

Each of the six capsules contains the following specimens:

Material	Number of Charpys	Number of Tensiles	Number of CTs
Limiting Base Material*	15	3	4
Limiting Base Material**	15	3	4
Weld Metal***	15	3	4
Heat-Affected Zone	15	-	-

The following dosimeters and thermal monitors are included in each of the six capsules:

Dosimeters

Iron

Copper

Nickel

Cobalt-Aluminum (0.15 percent Co)

Cobalt-Aluminum (Cadmium shielded)

U-238 (Cadmium shielded)

Np-237 (Cadmium shielded)

Thermal Monitors

97.5 percent Pb, 2.5 percent Ag (579°F melting point)

97.5 percent Pb, 1.75 percent Ag, 0.75 percent Sn (590°F melting point)

---

* Specimens oriented in the major rolling or working direction.

** Specimens oriented normal to the major rolling or working direction.

*** Weld metal to be selected per ASTM E185.

The fast neutron exposure of the specimens occurs at a faster rate than that experienced by the vessel wall, with the specimens being located between the core and the vessel. Since these specimens experience accelerated exposure and are actual samples from the materials used in the vessel, the transition temperature shift measurements are representative of the vessel at a later time in life. Data from CT fracture toughness specimens are expected to provide additional information for use in determining allowable stresses for irradiated material.

Correlations between the calculations and the measurements of the irradiated samples in the capsules, assuming the same neutron spectrum at the samples and the vessel inner wall, are described in Subsection 5.3.1.6a. They have indicated good agreement. The anticipated degree to which the specimens will affect the fast neutron flux and energy distribution will be considered in the evaluation of the surveillance specimen data. In accordance with Regulatory Guide RG-1.190 (Reference 1), validation of the calculated neutron exposures will be made using data from the withdrawn capsules. The schedule for removal of the capsules for post-irradiation testing conforms with the requirements of Appendix H of 10 CFR 50, which includes reference to ASTM E185-82.

a. Measurement of Integrated Fast Neutron (E > 1.0 MeV) Flux at the Irradiation Samples

The use of passive neutron sensors such as those included in the internal surveillance capsule dosimetry sets does not yield a direct measure of the energy dependent neutron flux level at the measurement location. Rather, the activation or fission process is a measure of the integrated effect that the time- and energy-dependent neutron flux has on the target material over the course of the irradiation period. An accurate assessment of the average flux level, and hence, time integrated exposure (fluence) experienced by the sensors may be developed from the measurements only if the sensor characteristics and the parameters of the irradiation are well known. In particular, the following variables are of interest:

1) the measured specific activity of each sensor;
2) the physical characteristics of each sensor;
3) the operating history of the reactor;
4) the energy response of each sensor; and
5) the neutron energy spectrum at the sensor location.

In this subsection, the procedures used to determine sensor specific activities, to develop reaction rates for individual sensors from the measured specific activities and the operating history of the reactor, and to derive key fast neutron exposure parameters from the measured reaction rates are described.

Determination of Sensor Reaction Rates

The specific activity of each of the radiometric sensors is determined using established ASTM procedures. Following sample preparation and weighing, the specific activity of each sensor is determined by means of a high purity germanium gamma spectrometer. In the case of the surveillance capsule multiple foil sensor sets, these analyses are performed by direct counting of each of the individual wires; or, as in the case of U-238 and Np-237 fission monitors, by direct counting preceded by dissolution and chemical separation of cesium from the sensor.

The irradiation history of the reactor over its operating lifetime is determined from plant power generation records. In particular, operating data is extracted on a monthly basis from the reactor startup to the end of the capsule irradiation period. For the sensor sets utilized in the surveillance capsule irradiations, the half-lives of the product isotopes are long enough that a monthly histogram describing reactor operation has proven to be an adequate representation for use in radioactive decay corrections for the reactions of interest in the exposure evaluations.

Having the measured specific activities, the operating history of the reactor, and the physical characteristics of the sensors, reaction rates referenced to full power operation are determined

$$R = \frac{A}{N_0 F Y \Sigma_j \frac{P_j}{P_{ref}} C_j \left[1 - e^{-\lambda t_j}\right] e^{-\lambda t_d}}$$

from the following equation:

where:

A = measured specific activity provided in terms of disintegrations per second per gram of target material (dps/gm).

R = reaction rate averaged over the irradiation period and referenced to operation at a core power level of P_{ref} expressed in terms of reactions per second per nucleus of target isotope (rps/nucleus).

N_0 = number of target element atoms per gram of sensor.

F = weight fraction of the target isotope in the sensor material.

Y = number of product atoms produced per reaction.

P_j = average core power level during irradiation period j (MW).

P_{ref} = maximum or reference core power level of the reactor (MW).

C_j = calculated ratio of $\phi(E > 1.0 \text{ MeV})$ during irradiation period j to the time weighted average $\phi(E = 1.0 \text{ MeV})$ over the entire irradiation period.

λ = decay constant of the product isotope (sec^{-1}).

t_j = length of irradiation period j (sec).

t_d = decay time following irradiation period j (sec).

and the summation is carried out over the total number of monthly intervals comprising the total irradiation period.

In the above equation, the ratio P_j/P_{ref} accounts for month-by-month variation of power level within a given fuel cycle. The ratio C_j is calculated for each fuel cycle and accounts for the change in sensor reaction rates caused by variations in flux level due to changes in core power spatial distributions from fuel cycle to fuel cycle. Since the neutron flux at the measurement locations within the surveillance capsules is dominated by neutrons produced in the peripheral fuel assemblies, the change in the relative power in these assemblies from fuel cycle to fuel cycle can have a significant impact on the activation of neutron sensors. For a single-cycle irradiation, $C_j = 1.0$. However, for multiple-cycle irradiations, particularly those employing low leakage fuel management, the additional C_j correction must be utilized in order to provide accurate determinations of the decay corrected reaction rates for the dosimeter sets contained in the surveillance capsules.

Corrections to Reaction Rate Data

Prior to using measured reaction rates in the least squares adjustment procedure discussed ahead, additional corrections are made to the U-238 measurements to account for the presence of U-235 impurities in the sensors as well as to adjust for the build-in of plutonium isotopes over the course of the irradiation.

In addition to the corrections made for the presence of U-235 in the U-238 fission sensors, corrections are also made to both the U-238 and Np-237 sensor reaction rates to account for gamma ray induced fission reactions occurring over the course of the irradiation.

Least Squares Adjustment Procedure

Least squares adjustment methods provide the capability of combining the measurement data with the neutron transport calculation resulting in a Best Estimate neutron energy spectrum with associated uncertainties. Best Estimates for key exposure parameters such as neutron fluence (E > 1.0 MeV) or iron atom displacements (dpa) along with their uncertainties are then easily obtained from the adjusted spectrum. The use of measurements in combination with the analytical results reduces the uncertainty in the calculated spectrum and acts to remove biases that may be present in the analytical technique.

In general, the least squares methods, as applied to pressure vessel fluence evaluations, act to reconcile the measured sensor reaction rate data, dosimetry reaction cross-sections, and the calculated neutron energy spectrum within their respective uncertainties. For example,

$$R_i \pm \delta_{R_i} = \sum_g (\sigma_{ig} \pm \delta_{\sigma_{ig}})(\phi_g \pm \delta_{\phi_g})$$

relates a set of measured reaction rates, R_i, to a single neutron spectrum, ϕ_g, through the multigroup dosimeter reaction cross-section, $\swarrow_{ig}$, each with an uncertainty ⋯.

The use of least squares adjustment methods in LWR dosimetry evaluations is not new. The American Society for Testing and Materials (ASTM) has addressed the use of adjustment codes in ASTM Standard E944, "Application of Neutron Spectrum Adjustment Methods in Reactor Surveillance" and many industry workshops have been held to discuss the various applications. For example, the ASTM-EURATOM Symposia on Reactor Dosimetry holds workshops on neutron spectrum unfolding and adjustment techniques at each of its bi-annual conferences.

The primary objective of the least squares evaluation is to produce unbiased estimates of the neutron exposure parameters at the location of the measurement. The analytical method alone may be deficient because it inherently contains uncertainty due to the input assumptions to the calculation. Typically these assumptions include parameters such as the temperature of the water in the peripheral fuel assemblies, by-pass region, and downcomer regions, component dimensions, and peripheral core source. Industry consensus indicates that the use of calculation alone results in overall uncertainties in the neutron exposure parameters in the range of 15-20% (1↙).

The application of the least squares methodology requires the following input:

1. The calculated neutron energy spectrum and associated uncertainties at the measurement location.
2. The measured reaction rate and associated uncertainty for each sensor contained in the multiple foil set.
3. The energy dependent dosimetry reaction cross-sections and associated uncertainties for each sensor contained in the multiple foil sensor set.

For a given application, the calculated neutron spectrum is obtained from the results of plant specific neutron transport calculations applicable to the irradiation period experienced by the dosimetry sensor set. The calculation is performed using the benchmarked transport calculational methodology described in Subsection 5.3.1.6b. The sensor reaction rates are derived from the measured specific activities obtained from the counting laboratory using the specific irradiation history of the sensor set to perform the radioactive decay corrections. The dosimetry reaction cross-sections and uncertainties that are utilized in LWR evaluations comply with ASTM Standard E1018, "Application of ASTM Evaluated Cross-Section Data File, Matrix E 706 (IIB)."

The uncertainties associated with the measured reaction rates, dosimetry cross-sections, and calculated neutron spectrum are input to the least squares procedure in the form of variances and covariances. The assignment of the input uncertainties also follows the guidance provided in ASTM Standard E 944.

b. Calculation of Integrated Fast Neutron (E > 1.0 MeV) Flux at the Irradiation Samples

A generalized set of guidelines for performing fast neutron exposure calculations within the reactor configuration, and procedures for analyzing measured irradiation sample data that can be correlated to these calculations, has been promulgated by the Nuclear Regulatory Commission (NRC) in Regulatory Guide RG-1.190, "Calculational and Dosimetry Methods for Determining Pressure Vessel Neutron Fluence" [Reference 1]. Since different calculational models exist and are continuously evolving along with the associated model inputs, e.g., cross-section data, it is worthwhile summarizing the key models, inputs, and procedures that the NRC staff finds acceptable for use in determining fast neutron exposures within the reactor geometry. This material is highlighted below.

Calculation and Dosimetry Measurement Procedures

The selection of a particular geometric model, the corresponding input data, and the overall methodology used to determine fast neutron exposures within the reactor geometry are based on the needs for accurately determining a solution to the problem that must be solved and the data/resources that are currently available to accomplish this task. Based on these constraints, engineering judgment is applied to each problem based on an analyst's thorough understanding of the problem, detailed knowledge of the plant, and due consideration to the strengths and weaknesses associated with a given calculational model and/or methodology. Based on these conditions, Regulatory Guide RG-1.190 does not recommend using a singular calculational technique to determine fast neutron exposures. Instead, RG 1.190 suggests that one of the following neutron transport tools be used to perform this work.

- Discrete Ordinates Transport Calculations
  - a) Adjoint calculations benchmarked to a reference-forward calculation, or stand-alone forward calculations.
  - b) Various geometrical models utilized with suitable mesh spacing in order to accurately represent the spatial distribution of the material compositions and source.
  - c) In performing discrete ordinates calculations, RG 1.190 also suggests that a P_3 angular decomposition of the scattering cross-sections be used, as a minimum.
  - d) RG 1.190 also recommends that discrete ordinates calculations utilize S_8 angular quadrature, as a minimum.
  - e) RG 1.190 indicates that the latest version of the Evaluated Nuclear Data File, or ENDF/B, should be used for determining the nuclear cross-sections; however, cross-sections based on earlier or equivalent nuclear data sets that have been thoroughly benchmarked are also acceptable.
- Monte Carlo Transport Calculations

A complete description of the Westinghouse pressure vessel neutron fluence methodology, which is based on the discrete ordinates transport calculations, is provided in Reference 2. The Westinghouse methodology adheres to the guidelines set forth in Regulatory Guide RG-1.190.

Plant-Specific Calculations

The most recent fast (E > 1.0 MeV) neutron fluence evaluation for the Seabrook reactor pressure vessel was based on a 2D/1D synthesis of neutron fluxes that were obtained from a series of plant- and cycle-specific forward discrete ordinates transport calculations run in R-||, R-Z, and R geometric models. The set of calculations, which assessed dosimetry as part of the reactor vessel surveillance program and pressure vessel neutron fluences, were conducted in accordance with the guidelines that are specified in Regulatory Guide RG –1.190.

5.3.1.6.1 Results of Evaluation of Irradiated Capsules

The first surveillance capsule U(58.5º) was removed from the Seabrook Unit 1 reactor vessel in August 1991 after 0.913 effective full power years (EFPYs) of reactor operation.

The second surveillance capsule Y(241º) was removed in May 1997 from the Seabrook Unit 1 reactor vessel after 5.572 effective full power years of reactor operation. The results of the Capsules U and Y analyses are contained in References 4 and 5 respectively.

The third surveillance capsule V(61º) was removed in April 2005 from the Seabrook Unit 1 reactor vessel after 12.39 EFPYs of reactor operation. The results of the Capsule V analysis are contained in WCAP-16526-NP (Reference 6) which was submitted to the NRC as required by 10 CFR 50 Appendix H. This report summarizes results from all three capsules (U, Y, and V) and the initial unirradiated mechanical tests for comparison.

The fourth surveillance capsule X(238.5º) was removed in March 2020 from the Seabrook Unit 1 reactor vessel after 26.46 EFPYs of reactor operation. The results of the Capsule X analysis are contained in WCAP-18607-NP (Reference 7) which was submitted to the NRC as required by 10 CFR 50 Appendix H. This report summarizes results from all four capsules (U, Y, V and X) and the initial unirradiated mechanical tests for comparison. The accumulated fluence for each capsule is also updated in this report.

The reactor vessel lower shell plate material (R1808-3) and beltline weld (Heat No. 4P6052) were included in the surveillance capsules as the limiting beltline materials in all four capsules. The radiation induced transition temperature shifts (delta RTNDT) for the limiting plate and weld materials, from all four capsules, were within the standard two deviations of Regulatory Guide 1.99, Revision 2 predictions. The irradiated upper shelf energy values for the vessel weld metal and base materials samples were well in excess of the 50 ft.-lb. lower limit for continued safe operation and are expected to be maintained above 50 ft.-lbs. throughout vessel life as required by 10 CFR 50 Appendix G.

5.3.1.7 Reactor Vessel Fasteners

The reactor vessel closure studs, nuts, and washers are designed and fabricated in accordance with the requirements of the ASME Code, Section III. The closure studs are fabricated of SA-540, Class 3, Grade B24. The closure stud material meets the fracture toughness requirements of the ASME Code, Section III and 10 CFR 50, Appendix G. Compliance with Regulatory Guide 1.65, "Materials and Inspections for Reactor Vessel Closure Studs," is discussed in Section 1.8. Nondestructive examinations are performed in accordance with the ASME Code, Section III. Fracture toughness data for the Seabrook Unit 1 reactor vessel bolting materials is presented in Table 5.3-4.

Seabrook refueling procedures require the studs, nuts and washers to be removed from the reactor cavity, therefore the reactor closure studs are never exposed to the borated refueling cavity water. Threaded portions of the studs have been treated with an anti galling coating.

The stud holes in the reactor flange are sealed with special plugs before removing the reactor closure thus preventing leakage of the borated refueling water into the stud holes.

5.3.2 Pressure-Temperature Limits

5.3.2.1 Limit Curves

Startup and shutdown operating limitations will be based on the properties of the core region materials of the reactor pressure vessel. Actual material property test data will be used. The methods outlined in Appendix G to Section XI of the ASME Code will be employed for the shell regions in the analysis of protection against nonductile failure. The initial operating curves are calculated assuming a period of reactor operation such that the beltline material will be limiting. The heatup and cooldown curves are given in the Technical Specifications. Beltline material properties degrade with radiation exposure, and this degradation is measured in terms of the adjusted reference nil-ductility temperature shift (ΔRT_{NDT}).

Predicted RT_{NDT} values are derived using the maximum fluence at ¼T (thickness) and ¾T location (tips of the code reference flaw when flaw is assumed at inside diameter and outside diameter locations, respectively) curve. This curve is presented in the Technical Specifications. For a selected time of operation, this shift is assigned a sufficient magnitude so that no unirradiated ferritic materials in other components of the Reactor Coolant System (RCS) will be limiting in the analysis.

The operating curves including pressure-temperature limitations are calculated in accordance with 10 CFR 50, Appendix G and ASME Code, Section XI, Appendix G, requirements. Changes in fracture toughness of the core region plates or forgings, weldments and associated heat-affected zones due to radiation damage will be monitored by a surveillance program which conforms with ASTM E185-79, 10 CFR 50, Appendix H. The evaluation of the radiation damage in this surveillance program is based on pre-irradiation testing of Charpy V-notch and tensile specimens and post-irradiation testing of Charpy V-notch, tensile, and ½T compact tension specimens. The post-irradiation testing will be carried out during the lifetime of the reactor vessel. Specimens are irradiated in capsules located near the core midheight and removable from the vessel at specified intervals.

The results of the radiation surveillance program will be used to verify that the RT_{NDT} predicted from the effects of the fluence and copper content curve is appropriate and to make any changes necessary to correct the fluence and copper curves if RT_{NDT} determined from the surveillance program is greater than the predicted RT_{NDT}. Temperature limits for preservice hydrotests and in-service leak and hydrotests will be calculated in accordance with 10 CFR 50, Appendix G.

Compliance with Regulatory Guide 1.99, "Effects of Residual Elements on Predicted Radiation Damage to Reactor Vessel Materials," is discussed in Section 1.8.

5.3.2.2 Operating Procedures

The transient conditions that are considered in the design of the reactor vessel are presented in Subsection 3.9(N).1.1. These transients are representative of the operating conditions that should prudently be considered to occur during plant operation. The transients selected form a conservative basis for evaluation of the RCS to insure the integrity of the RCS equipment.

Those transients listed as upset condition transients are given in Table 3.9(N)-1. None of these transients will result in pressure-temperature changes which exceed the heatup and cooldown limitations as described in Subsection 5.3.3.1 and in the Technical Specifications.

5.3.3 Reactor Vessel Integrity

5.3.3.1 Design

The reactor vessel is cylindrical with a welded hemispherical bottom head and a removable, bolted, flanged and gasketed, hemispherical upper head. The reactor vessel flange and head are sealed by two hollow metallic 0-rings. Seal leakage is detected by means of two leakoff connections: one between the inner and outer ring and one outside the outer 0-ring. The vessel contains the core, core support structures, control rods, and other parts directly associated with the core. The reactor vessel closure head contains head adaptors. These head adaptors are tubular members, attached by partial penetration welds to the underside of the closure head. The upper end of these adaptors contain acme threads for the assembly of control rod drive mechanisms or instrumentation adaptors. The seal arrangement at the upper end of these adaptors consists of a welded flexible canopy seal. The threaded connection forms the pressure boundary. The canopy seals are not pressure retaining and are designed to provide a means to control leaks through the threads. If leakage develops through a canopy seal weld, either a weld repair or a canopy seal clamp assembly can be used to repair or prevent the leak. Inlet and outlet nozzles are located symmetrically around the vessel. Outlet nozzles are arranged on the vessel to facilitate optimum layout of the RCS equipment. The inlet nozzles are tapered from the coolant loop vessel interfaces to the vessel inside wall to reduce loop pressure drop.

The bottom head of the vessel contains penetration nozzles for connection and entry of the nuclear incore instrumentation. Each nozzle consists of a tubular member made of either an Inconel or an Inconel-stainless steel composite tube. Each tube is attached to the inside of the bottom head by a partial penetration weld.

Internal surfaces of the vessel which are in contact with primary coolant are weld overlay with 0.125 inch minimum of stainless steel or Inconel. The exterior of the reactor vessel is insulated with canned stainless steel reflective sheets. The insulation is a minimum of 3 and a maximum of 4½ inches thick and contoured to enclose the top, sides and bottom of the vessel. Top, bottom and nozzle sections of the insulation modules are removable. Access to vessel side insulation is limited by the surrounding concrete.

The reactor vessel is designed and fabricated in accordance with the requirements of the ASME Code, Section III.

Principal design parameters of the reactor vessel are given in Table 5.3-1. The reactor vessel is shown in Figure 5.3-1.

There are no special design features which would prohibit the in situ annealing of the vessel. If the unlikely need for an annealing operation was required to restore the properties of the vessel material opposite the reactor core because of neutron irradiation damage, a metal temperature greater than 650°F for a period of 168 hours maximum would be applied. Various modes of heating may be used depending on the temperature.

The reactor vessel materials surveillance program is adequate to accommodate the annealing of the reactor vessel. Sufficient specimens are available to evaluate the effects of the annealing treatment.

Cyclic loads are introduced by normal power changes, reactor trip startup and shutdown operations. These design base cycles are selected for fatigue evaluation and constitute a conservative design envelope for the projected plant life. Vessel analysis results in a usage factor that is less than 1.

The design specifications require analysis to prove that the vessel is in compliance with the fatigue and stress limits of the ASME Code, Section III. The loadings and transients specified for the analysis are based on the most severe conditions expected during service. Per the reactor vessel design specification and subsequently documented in the qualification report, the vessel is capable of tolerating a heatup **and** cooldown rate of less **than** or equal to 100°F/hr during normal plant conditions. The heatup and cooldown rates may be further operationally limited by the governing pressure-temperature limit curves of Technical Specification 3.4.9.1

5.3.3.2 Materials of Construction

The materials used in the fabrication of the reactor vessel are discussed in Subsection 5.2.3.

5.3.3.3 Fabrication Methods

The Seabrook reactor vessel manufacturer is Combustion Engineering Corporation.

The fabrication methods used in the construction of the reactor vessel are discussed in Subsection 5.3.1.2.

5.3.3.4 Inspection Requirements

The nondestructive examinations performed on the reactor vessel are described in Subsection 5.3.1.3.

5.3.3.5 Shipment and Installation

The reactor vessel was shipped in a horizontal position on a shipping sled with a vessel lifting truss assembly. All vessel openings were sealed to prevent the entrance of moisture and an adequate quantity of desiccant bags was placed inside the vessel. These were usually placed in a wire mesh basket attached to the vessel cover. All carbon steel surfaces were painted with a heat-resistant paint before shipment except for the vessel support surfaces and the top surface of the external seal ring.

The closure head was also shipped with a shipping cover and skid. An enclosure attached to the ventilation shroud support ring protected the control rod mechanism housings. All head openings were sealed to prevent the entrance of moisture and an adequate quantity of desiccant bags was placed inside the head. These were placed in a wire mesh basket attached to the head cover. All carbon steel surfaces were painted with heat-resistant paint before shipment. A lifting frame was provided for handling the vessel head.

For a discussion of the degree of conformance with Regulatory Guides 1.37, 1.38 and 1.39, see Section 1.8.

5.3.3.6 Operating Conditions

Operating limitations for the reactor vessel are presented in Subsection 5.3.2, as well as in the Technical Specifications.

In addition to the analysis of primary components discussed in Subsection 3.9(N).1.4, the reactor vessel is further qualified to ensure against unstable crack growth under faulted conditions. Actuation of the Emergency Core Cooling System (ECCS) following a loss-of-coolant accident produces relatively high thermal stresses in regions of the reactor vessel, which come into contact with ECCS water. Primary consideration is given to these areas, including the reactor vessel beltline region and the reactor vessel primary coolant nozzle, to ensure the integrity of the reactor vessel under this severe postulated transient.

The principles and procedures of linear elastic fracture mechanics (LEFM) are used to evaluate thermal effects in the regions of interest. The LEFM approach to the design against failure is basically a stress intensity consideration in which criteria are established for fracture instability in the presence of a crack. Consequently, a basic assumption employed in LEFM is that a crack or crack-like defect exists in the structure. The essence of the approach is to relate the stress field developed in the vicinity of the crack tip to the applied stress on the structure, the material properties, and the size of defect necessary to cause failure.

The elastic stress field at the crack tip in any cracked body can be described by a single parameter designated as the stress intensity factor, K. The magnitude of the stress intensity factor, K, is a function of the geometry of the body containing the crack, the size and location of the crack, and the magnitude and distribution of the stress.

The criterion for failure in the presence of a crack is that failure will occur whenever the stress intensity factor exceeds some critical value. For the opening mode of loading (stresses perpendicular to the major plane of the crack) the stress intensity factor is designated as K_I and the critical stress intensity factor is designated K_{IC}. Commonly called the fracture toughness, K_{IC} is an inherent material property which is a function of temperature and strain rate. Any combination of applied load, structural configuration, crack geometry and size which yields a stress intensity factor, K_{IC}, for the material will result in crack instability.

The criterion of the applicability of LEFM is based on plasticity considerations at the postulated crack tip. Strict applicability (as defined by ASTM) of LEFM to large structures where plane strain conditions prevail requires that the plastic zone developed at the tip of the crack does not exceed 2.25 percent of the crack depth. In the present analysis, the plastic zone at the tip of the postulated crack can reach 20 percent of the crack depth. However, LEFM has been successfully used to provide conservative brittle fracture prevention evaluations, even in cases where strict applicability of the theory is not permitted due to excessive plasticity. Recently, experimental results from Heavy Section Steel Technology (HSST) Program intermediate pressure vessel tests, have shown that LEFM can be applied conservatively as long as the pressure component of the stress does not exceed the yield strength of the material. The addition of the thermal stresses, calculated elastically, which results in total stresses in excess of the yield strength does not affect the conservatism of the results, provided that these thermal stresses are included in the evaluation of the stress intensity factors. Therefore, for faulted condition analyses, LEFM is considered applicable for the evaluation of the vessel inlet nozzle and beltline region.

In addition, it has been well established that the crack propagation of existing flaws in a structure subjected to cyclic loading can be defined in terms of fracture mechanics parameters. Thus, the principles of LEFM are also applicable to fatigue growth of a postulated flaw at the vessel inlet nozzle and beltline region.

An example of a faulted condition evaluation carried out according to the procedure discussed above is given in Reference 3. This report discussed the evaluation procedure in detail as applied to a severe faulted condition (a postulated loss-of-coolant accident), and concludes that the integrity of the reactor coolant pressure boundary would be maintained in the event of such an accident.

5.3.3.7 In-Service Surveillance

a. The reactor vessel will be examined during refueling per the requirements of ASME Section XI by means of a special automated inspection fixture that allows ultrasonic inspection of the vessel welds, the nozzle-to-shell welds and the nozzle inside surface areas.

b. The vessel lower head will also be ultrasonically examined per the requirements of ASME Section XI from the outside surface, since the lower head insulation has been designed to be easily removed.

c. With the bottom head insulation removed, the penetrations for the incore instrumentation will be examined visually.

d. The vessel cladding will be visually examined during refueling. The core barrel has been designed to be removed easily to permit examination.

e. The vessel closure head will be examined on both inner and outer surfaces during refueling per ASME Section XI requirements, since it is supported on a special fixture on the operating floor. The cladding, gasket seating surfaces and control rod drive mechanism housings will be examined by optical devices. The closure head cladding will be examined by volumetric or surface methods while on the support fixture.

f. The closure head flange to knuckle transition piece weld and transition piece to dome weld will be examined on the outer surface by volumetric examination methods per ASME Section XI requirements.

g. Clearances have been provided for volumetric and surface examination of the vessel nozzle to safe-end welds per ASME Section XI requirements, and the insulation has been designed for easy removal for this purpose.

h. The vessel closure studs, nuts and washers will be examined in situ or when removed, in accordance with the requirements of IWB-2500 and IWB-2600 of Section XI of the ASME Code.

i. The reactor vessel presents access problems because of the radiation levels and remote underwater accessibility to this component. Because of these limitations on access to the reactor vessel, several steps have been incorporated into the design and manufacturing procedures in preparation for the periodic nondestructive tests which are required by the ASME in-service code. These are:

1. Shop ultrasonic examinations were performed on all internally clad surfaces to an acceptance and repair standard to assure an adequate cladding bond and to allow later ultrasonic testing of the base metal from the inside surface. The size of cladding bond defect allowed was ¼ inch by ¾ inch, with the greater dimension parallel to the weld in the region bounded by 2T (T = wall thickness) on both sides of each full penetration pressure boundary weld. Unbounded areas exceeding 0.442 square inches (¾ inch diameter) in all other regions were rejected.

2. The design of the reactor vessel shell is an uncluttered cylindrical surface to permit future positioning of the test equipment without obstruction.

3. The weld-deposited clad surfaces on both sides of the welds to be inspected were specifically prepared to assure meaningful ultrasonic examinations.

4. During fabrication, all full penetration ferritic pressure boundary welds were ultrasonically examined in addition to code examinations.

5. After the shop hydrostatic testing, all full penetration ferritic pressure boundary welds, as well as the nozzle to safe-end welds, were ultrasonically examined in addition to ASME Code, Section III, requirements (see Subsection 5.3.1.3).

j. The in-service inspection program defined in Chapter 16 and discussed in Subsection 5.2.4 meets all the requirements of Section XI of the ASME Code with no exceptions. This comprehensive program of in-service inspection, when combined with the augmented material surveillance described above, should provide for early detection and timely monitoring of any flaws in either the base material, the cladding or the welds in the reactor vessel which could even remotely be considered to threaten reactor vessel integrity. When the conservative design of the reactor vessel is considered (see Subsection 5.3.3.1), these material surveillance and in-service inspection programs should guarantee that reactor pressure vessel boundary integrity will be maintained for the life of the plant.

5.3.4 References

1. Regulatory Guide RG-1.190, "Calculational and Dosimetry Methods for Determining Pressure Vessel Neutron Fluence," United States Nuclear Regulatory Commission, Office of Nuclear Regulatory Research, March 2001.
2. WCAP-15557, "Qualification of the Westinghouse Pressure Vessel Neutron Fluence Evaluation Methodology," S.L. Anderson, August 2000.
3. Buchalet, C. and Mager, T. R., "A Summary Analysis of the April 30 Incident at the San Onofre Nuclear Generating Station Unit 1," WCAP-8099, April 1973.
4. YAEC-1853, "Analysis of Seabrook Station Unit 1 Reactor Vessel Surveillance Capsule U", June 26, 1992 (FP 57955).
5. DES-NFQA-98-01, "Analysis of Seabrook Station Unit 1 Reactor Vessel Surveillance Capsules U and Y", May 1998 (FP 58503).
6. WCAP-16526-NP, "Analysis of Capsule V from the Florida Power and Light Energy Seabrook Unit 1 Reactor Vessel Radiation Surveillance Program", Rev. 0, March 2006 (FP 25626).
7. WCAP-18607-NP Rev 0, "Analysis of Capsule X from NextEra Energy Seabrook Unit 1 Reactor Vessel Radiation Surveillance Program", Rev.0, March 2021 (FP 26457).

5.4 COMPONENT AND SUBSYSTEM DESIGN

5.4.1 Reactor Coolant Pump Assembly

5.4.1.1 Design Bases

The reactor coolant pump assembly ensures an adequate core cooling flow rate for sufficient heat transfer to maintain a Departure from Nucleate Boiling Ratio (DNBR) greater than or equal to the safety analysis limit value. The required net positive suction head is by conservative pump design always less than that available by system design and operation.

Sufficient pumping rotation inertia is provided by a flywheel, in conjunction with the pump and motor rotor assembly, to provide adequate flow during coastdown. This forces flow following an assumed loss of pump power and the subsequent natural circulation effect provides the core with adequate cooling.

The reactor coolant pump motor is tested, without mechanical damage, at overspeeds up to and including 125 percent of normal speed. The integrity of the flywheel during a loss-of-coolant accident (LOCA) is demonstrated in Reference 1, which is undergoing generic review by the NRC.

The reactor coolant pump is shown in Figure 5.4-1. The reactor coolant pump design parameters are given in Table 5.4-1.

Code and material requirements are provided in Section 5.2.

5.4.1.2 Pump Assembly Description

a. Design Description

The reactor coolant pump is a vertical, single stage, controlled leakage, centrifugal pump designed to pump large volumes of water at high temperatures and pressures.

The pump assembly consists of three major areas. They are the hydraulics, the seals, and the motor.

1. The hydraulic section consists of the casing, impeller, turning vane diffuser, and diffuser adapter.

2. The shaft seal section consists of three primary devices. They are the number 1 controlled leakage, film riding face seal, and the number 2 and number 3 rubbing face seals. These seals are contained within the thermal barrier heat exchanger assembly and seal housing. Collectively, they provide a pressure breakdown from the reactor coolant system (RCS) pressure to ambient conditions. A fourth sealing device called a shutdown seal is housed within the No. 1 seal area and is passively actuated by high temperature if seal cooling is lost.

3. The motor is a drip-proof, water/air cooled, squirrel cage induction motor, with a vertical solid shaft, an oil-lubricated double-acting Kingsbury type thrust bearing, upper and lower oil-lubricated radial guide bearings, and a flywheel.

Additional components of the pump are the shaft, pump radial bearing, thermal barrier heat exchanger, coupling, spool piece, and motor stand.

b. Description of Operation

The reactor coolant enters the suction nozzle, is pumped through the turning vane diffuser, and exits through the discharge nozzle. The diffuser adapter limits the leakage of reactor coolant back to the suction.

Seal injection flow, under slightly higher pressure than the reactor coolant discharge pressure, enters the pump through a connection on the thermal barrier flange, and is directed into the plenum between the thermal barrier housing and the shaft. The flow splits with a portion flowing down the shaft through the radial bearing and into the RCS; the remainder flows up the shaft through the seals.

Component cooling water is provided to the thermal barrier heat exchanger. During normal operation, seal injection flow provides cooling to the radial bearing and to the seals.

The reactor coolant pump motor bearings are of conventional design. The radial bearings are the segmented pad type, and the thrust bearing is a double-acting Kingsbury type. All are oil-lubricated. Component cooling water is supplied to the external upper bearing oil cooler and to the integral lower bearing oil cooler.

The motor is a water/air cooled, Class B thermalastic epoxy insulated, squirrel cage induction motor. The rotor and stator are of standard construction and are cooled by air. Six resistance temperature detectors are imbedded in the stator windings to sense stator temperature. The top of the motor consists of a flywheel and an anti-reverse rotation device.

The internal parts of the motor are cooled by air. Integral vanes on each end of the rotor draw air in through cooling slots in the motor frame. This air passes through the motor with particular emphasis on the stator end turns. It is then routed to the external water/air heat exchangers, which are supplied with component cooling water. Each motor has two such coolers, mounted diametrically opposed to each other. In passing through the coolers, the air is cooled and then directed back to the motor air inlets through external ducts on the motor so that no air is discharged into the Containment from the motors.

Each of the reactor coolant pump assemblies is equipped for continuous monitoring of reactor coolant pump shaft and frame vibration levels. Shaft vibration is measured by two relative shaft probes mounted on top of the pump seal housing; the probes are located 90 degrees apart in the same horizontal plane and mounted near the pump shaft. Frame vibration is measured by two velocity seismoprobes located 90 degrees apart in the same horizontal plane and mounted at the top of the motor support stand. Proximeters and converters linearize the probe output which is displayed and alarmed in the Control Room.

A removable shaft segment, the spool piece, is located between the motor coupling flange and the pump coupling flange; the spool piece allows removal of the pump seals with the motor in place. The pump internals, motor, and motor stand can be removed from the casing without disturbing the reactor coolant piping. The flywheel is available for inspection by removing the cover.

Each reactor coolant pump is equipped with an interlock which prevents pump start under conditions of (1) inadequate reactor coolant pump oil lift system pressure, or (2) inadequate reactor coolant pump number 1 seal differential pressure. This interlock prevents pump start under conditions which may result in pump motor bearing or seal system damage.

All parts of the pump in contact with the reactor coolant are austenitic stainless steel except for seals, bearings and special parts.

5.4.1.3 Design Evaluation

a. Pump Performance

The reactor coolant pumps are sized to deliver flow at rates which equal or exceed the required flow rates. Initial RCS tests confirm the total delivery capability. Thus, assurance of adequate forced circulation coolant flow is provided prior to initial plant operation.

The estimated performance characteristic is shown in Figure 5.4-2. The "knee" at about 45 percent design flow introduces no operational restrictions, since the pumps operate at full flow.

The Reactor Trip System ensures that pump operation is within the assumptions used for loss-of-coolant flow analyses, which also assures that adequate core cooling is provided to permit an orderly reduction in power if flow from a reactor coolant pump is lost during operation.

An extensive test program has been conducted for several years to develop the controlled leakage shaft seal for pressurized water reactor applications. Long-term tests are conducted on less than full-scale prototype seals as well as on full-size seals. Operating plants continue to demonstrate the satisfactory performance of the controlled leakage shaft seal pump design.

The support of the stationary member of the Number 1 seal ("seal ring") allows large deflections, both axial and tilting, while still maintaining its controlled gap relative to the seal runner. Even if all the graphite were removed from the pump bearings, the shaft could not deflect far enough to cause opening of the controlled leakage gap. The "spring-rate" of the hydraulic forces associated with the maintenance of the gap is high enough to ensure that the ring follows the runner under very rapid shaft deflections.

Testing of pumps with the Number 1 seal entirely bypassed (full system pressure on the Number 2 seal) shows that relatively small leakage rates would be maintained for a period of time which is sufficient to secure the pump even if the Number 1 seal fails entirely during normal operation; the Number 2 seal would maintain these small leakage rates if the proper action is taken by the operator. The plant operator is warned of Number 1 seal damage by the increase in Number 1 seal leakoff rate. Should an excessive seal leakage condition develop, the operator will secure the RCP in accordance with station procedures. Gross leakage from the pump does not occur if the proper operator action is taken subsequent to warning of excessive seal conditions.

The effect of loss of offsite power on the pump itself is to cause a temporary stoppage in the supply of injection flow to the pump seals and also of the cooling water for seal and bearing cooling. The emergency diesel generators are started automatically due to loss of offsite power so that component cooling flow is automatically restored; seal injection flow is subsequently restored.

The shutdown seal (SDS) is housed within the No. 1 seal area and is a passive device actuated by high temperature resulting from a loss of seal injection and CCW cooling to the thermal barrier heat exchanger. The SDS is designed to function only when exposed to an elevated fluid temperature downstream of the RCP number 1 seal, resulting from a loss of seal injection and CCW flow to the thermal barrier heat exchanger. SDS deployment limits leakage from the RCS through the RCP seal package. Leakage is limited when the SDS thermal actuator retracts due to intrusion of hot reactor coolant water into the seal area, which causes the SDS piston ring to constrict around the RCP shaft.

An evaluation was performed to determine the effects of loss of seal injection to the RCPs as a result of operator actions to mitigate an inadvertent ECCS initiation at power event. The evaluation concluded that seal temperature will be maintained below the RCP shutdown limit of 220ºF at least one hour for RCP No. 1 seal leak off flow rates between 1 gpm and 6 gpm during normal operation. There is negligible change in seal flow rate due to isolation of the seal leak-off line, and subsequent lifting of the relief valve following an inadvertent ECCS initiation at power event.

An evaluation of an extended loss of seal injection has determined that the RCP may have to be secured because the seal and bearing temperatures may reach their maximum operating limits. This evaluation assumed an extended loss of seal injection, an unlikely event, with low No. 1 seal leak off flow, and the Thermal Barrier heat exchanger cooling water at maximum design temperature and at minimum flow. The operator is warned of the loss of seal injection flow by alarm. The operator can then monitor bearing and seal temperatures. Should RCP bearing and/or seal temperatures approach operating limits, the operator will secure the RCP in accordance with station procedures.

b. Coastdown Capability

It is important to reactor protection that the reactor coolant continues to flow for a short time after reactor trip. In order to provide this flow in a station blackout condition, each reactor coolant pump is provided with a flywheel. Thus, the rotating inertia of the pump, motor and flywheel is employed during the coastdown period to continue the reactor coolant flow. An inadvertent actuation of the shutdown seal (SDS) on a rotating assembly will not have any measureable effect on the RCP coastdown or on the pump's capability to provide sufficient cooling flow to the reactor core. The coastdown flow transients are provided in the figures in Section 15.3. The pump assembly is designed for the Safe Shutdown Earthquake at the site. Hence, it is concluded that the coastdown capability of the pumps is maintained even under the most adverse case of a blackout coincident with the Safe Shutdown Earthquake. Core flow transients and figures are provided in Section 15.3.

c. Bearing Integrity

The design requirements for the reactor coolant pump bearings are primarily aimed at ensuring a long life with negligible wear, provide accurate alignment and smooth operation over long periods of time. The surface bearing stresses are held at a very low value, and even under the most severe seismic transients do not begin to approach loads which cannot be adequately carried for short periods of time.

Because there are no established criteria for short time stress-related failures in such bearings, it is not possible to make a meaningful quantification of such parameters as margins to failure, safety factors, etc. A qualitative analysis of the bearing design, embodying such considerations, gives assurance of the adequacy of the bearing to operate without failure.

Low oil levels in the lube oil sumps signal alarms in the control room and require shutting down of the pump. Each motor bearing contains embedded temperature detectors, and so initiation of failure, separate from loss of oil, is indicated and alarmed in the control room as a high bearing temperature. This, again, requires pump shutdown. If these indications are ignored, and the bearing proceeded to failure, the low melting point of Babbitt metal on the pad surfaces ensures that sudden seizure of the shaft will not occur. In this event the motor continues to operate, as it has sufficient reserve capacity to drive the pump under such conditions. However, the high torque required to drive the pump will require high current which will lead to the motor being shutdown by the electrical protection systems.

d. Locked Rotor

In may be hypothesized that the pump impeller might severely rub on a stationary member and then seize. Analysis has shown that under such conditions, assuming instantaneous seizure of the impeller, the pump shaft fails in torsion just below the coupling to the motor, disengaging the flywheel and motor from the shaft. This constitutes a loss-of-coolant flow in the loop. Following such a postulated seizure, the motor continues to run without any overspeed, and the flywheel maintains its integrity, as it is still supported on a shaft with two bearings. Flow transients are provided in the figures in Subsection 15.3.3 for the assumed locked rotor.

There are no other credible sources of shaft seizure other than impeller rubs. A sudden seizure of the pump bearing is precluded by graphite in the bearing. Any seizure in the seals results in a shearing of the anti-rotation pin in the seal ring. An inadvertent actuation of the SDS on a rotating shaft does not exert sufficient torque to cause a locked rotor / shaft seizure event. The motor has adequate power to continue pump operation even after the above occurrences. Indications of the pump malfunction in these conditions are initially by high temperature signals from the bearing water temperature detector, excessive Number 1 seal leakoff indications, and offscale #1 seal leakoff indications, respectively. Following these signals, pump vibration levels are checked. Excessive vibration indicates mechanical trouble and the pump is shutdown for investigations.

e. Critical Speed

The reactor coolant pump shaft is designed so that its operating speed is below its first critical speed. This shaft design, even under the most severe postulated transient, gives low values of actual stress.

f. Missile Generation

Precautionary measures taken to preclude missile formation from primary coolant pump components assure that the pumps will not produce missiles under any anticipated accident condition. Appropriate components of the primary pump motors have been analyzed for missile generation. Any fragments of the motor rotor would be contained by the heavy stator. The same conclusion applies to the pump impeller, because the small fragments that might be ejected would be contained by the heavy casing. Further discussion and analysis of missile generation is contained in Reference 1.

g. Pump Cavitation

The minimum net position suction head required by the reactor coolant pump at running speed is approximately at 192 feet of head (approximately 85 psi). Operating instructions prohibit pump operation when minimum differential pressure across the number 1 seal is less than 200 psi. This corresponds to a primary loop pressure at which the minimum net positive suction head is exceeded and no limitation on pump operation occurs from this source.

h. Pump Overspeed Considerations

For turbine trips actuated by either the Reactor Trip System or the Turbine Protection System, the generator breaker disconnects the generator, permitting the reactor coolant pumps to be maintained connected to the external network to prevent any pump overspeed condition. Further discussion of pump overspeed considerations is contained in Reference 1.

i. Anti-Reverse Rotation Device

Each of the reactor coolant pumps is provided with an anti-reverse rotation device in the motor. This anti-reverse mechanism consists of pawls mounted on the outside diameter of the flywheel, a serrated ratchet plate mounted on the motor frame, a spring return for the ratchet plate, and shock absorbers.

At an approximate forward speed of 70 rpm, the pawls drop and bounce across the ratchet plate; as the motor continues to slow, the pawls drag across the ratchet plate. After the motor has slowed and come to a stop, the dropped pawls engage the ratchet plate and, as the motor tends to rotate in the opposite direction, the ratchet plate also rotates until it is stopped by the shock absorbers. The rotor remains in this position until the motor is energized again. When the motor is started, the ratchet plate is returned to its original position by the spring return.

As the motor begins to rotate, the pawls drag over the ratchet plate. When the motor reaches sufficient speed, the pawls are bounced into an elevated position, and are held in that position by centrifugal forces acting upon the pawls. While the motor is running at rated speed, there is no contact between the pawls and ratchet plate.

Considerable plant experience with the design of the anti-reverse rotation device has shown high reliability of operation.

j. Shaft Seal Leakage

During normal operation, leakage along the reactor coolant pump shaft is controlled by three shaft seals arranged in series so that reactor coolant leakage to the Containment is essentially zero. Seal water injection flow is directed to each reactor coolant pump. Seal water prevents leakage of high temperature reactor coolant along the pump shaft. It enters the pumps through a connection on the thermal barrier flange and is directed to a plenum between the thermal barrier housing and the shaft. Here the flow splits: a portion flows down the shaft to cool the bearing and enters the RCS; the remainder flows up the shaft through the Number 1 seal, a controlled leakage seal. After passing through the seal, most of the flow leaves the pump via the Number 1 seal leakoff line. Minor flow passes through the Number 2 seal and leakoff line. A back flush injection from a standpipe flows into the Number 3 seal between its "double dam" seal area. At this point the flow divides with half flushing through one side of the seal and out the Number 2 seal leakoff, while the remaining half flushed through the other side and out the Number 3 seal leakoff. This arrangement assures essentially zero leakage of reactor coolant or trapped gases from the pump.

In the event that seal injection and CCW flow to the thermal barrier heat exchanger is lost, reactor coolant begins to travel along the RCP shaft and displaces the cooler seal injection water. Once the temperature downstream of the number 1 seal reaches the SDS activation temperature range, the SDS activates by the retraction of a thermal actuator, causing the SDS piston and polymer rings to constrict around the shaft. SDS actuation controls shaft seal leakage and limits the loss of reactor coolant through the RCP seal package.

k. Seal Discharge Piping

The Number 1 seal drops the system pressure to that of the volume control tank. Water from each pump Number 1 seal is piped to a common manifold, and through the seal water return filter and through the seal water heat exchanger where the temperature is reduced to that of the volume control tank. The Number 2 and Number 3 leakoff lines dump Number 2 and 3 seal leakage to the reactor coolant drain tank and the containment sump, respectively.

5.4.1.4 Tests and Inspections

The reactor coolant pumps can be inspected in accordance with the ASME Code, Section XI, for in-service inspection of nuclear reactor coolant systems.

The pump casing is cast in one piece, eliminating welds in the casing. Support feet are cast integral with the casing to eliminate a weld region.

The design enables disassembly and removal of the pump internals for visual access to the internal surface of the pump casing.

The reactor coolant pump quality assurance program is given in Table 5.4-2.

5.4.1.5 Pump Flywheels

The integrity of the reactor coolant pump flywheel is assured on the basis of the following design and quality assurance procedures:

a. Design Basis

The calculated stresses at operating speed are based on stresses due to centrifugal forces. The stress resulting from the interference fit of the flywheel on the shaft is less than 2000 psi at zero speed, but this stress becomes zero at approximately 600 rpm because of radial expansion of the hub. The primary coolant pumps run at approximately 1190 rpm and may operate briefly at overspeeds up to 109 percent (1295 rpm) during loss of outside load. For conservatism, however, 125 percent of operating speed was selected as the design speed for the primary coolant pumps. The flywheels are given a test of 125 percent of the maximum synchronous speed of the motor.

b. Fabrication and Inspection

The flywheel consists of two thick plates bolted together. The flywheel material is produced by a process that minimizes flaws in the material and improves its fracture toughness properties, such as vacuum degassing, vacuum melting, or electroslag remelting. Each plate is fabricated from SA-533, Grade B, Class 1 steel. Supplier certification reports are available for all plates and demonstrate the acceptability of the flywheel material on the basis of the requirements of Regulatory Guide 1.14.

Flywheel blanks are flame-cut from the SA-533, Grade B, Class 1, steel plates with at least ½ inch of stock left on the outer and bore radii for machining to final dimensions. The finished machined bores, keyways, and drilled holes are subjected to magnetic particle or liquid penetrant examinations in accordance with the requirements of Section III of the ASME Code. The finished flywheels, as well as the flywheel material (rolled plate), are subjected to 100 percent volumetric ultrasonic inspection using procedures and acceptance standards specified in Section III of the ASME Code.

The reactor coolant pump motors are designed such that, by removing the cover to provide access, the flywheel is available to allow an in-service inspection program in accordance with the recommendations of Regulatory Guide 1.14, which references Section XI of the ASME Code.

c. Material Acceptance Criteria

The reactor coolant pump motor flywheel conforms to the following material acceptance criteria:

1. The nil-ductility transition temperature (NDTT) of the flywheel material is obtained by two Drop Weight Tests (DWT) which exhibit "no-break" performance at 20°F in accordance with ASTM E208. The above drop weight tests demonstrate that the NDTT of the flywheel material is no higher than 10°F.

2. A minimum of three Charpy V-notch impact specimens from each plate shall be tested at ambient (70°F) temperature in accordance with the specification ASME SA-370. The Charpy V-notch (C_v) energy in both the parallel and normal orientation with respect to the rolling direction of the flywheel materials is at least 50 foot pounds at 70°F and therefore an RT_{NDT} of 10°F can be assumed. An evaluation of flywheel overspeed has been performed which concludes that flywheel integrity will be maintained (Reference 1).

Thus, it is concluded that flywheel plate materials are suitable for use, and can meet Regulatory Guide 1.14 acceptance criteria on the bases of suppliers' certification data. The degree of compliance with Regulatory Guide 1.14 is further discussed in Section 1.8.

5.4.2 Steam Generators

5.4.2.1 Design Basis

Steam generator design data are given in Table 5.4-3. Code classifications of the steam generator components are given in Section 3.2. Although the ASME classification for the secondary side is specified to be Class 2, all pressure retaining parts of the steam generator, and thus both the primary and secondary pressure boundaries, are designed to satisfy the criteria specified in Section III of the ASME Code for Class 1 components. The design stress limits, transient conditions and combined loading conditions applicable to the steam generator are discussed in Subsection 3.9.1. Estimates of radioactivity levels anticipated in the secondary side of the steam generators during normal operation, and the bases for the estimates, are given in Chapter 11. The accident analysis of a steam generator tube rupture is discussed in Chapter 15.

A design objective of the internal moisture separation equipment is that moisture carryover should not exceed 0.25 percent by weight under the following conditions:

a. Steady state operation up to 100 percent of full load steam flow, with water at the normal operating level.

b. Loading or unloading at a rate of 5 percent of full power steam flow per minute in the range of 15 to 100 percent of full load steam flow.

c. A step load change of 10 percent of full power in the range from 15 to 100 percent full load steam flow.

The water chemistry on the reactor side, selected to provide the necessary boron content for reactivity control should minimize corrosion of RCS surfaces. The effectiveness of the water chemistry of the steam side in maintaining corrosion control are discussed in Chapter 10. Compatibility of steam generator tubing with both primary and secondary coolants is discussed further in Subsection 5.4.2.4c.

The steam generator is designed to minimize unacceptable damage from mechanical or flow induced vibration. Tube support adequacy is discussed in Subsection 5.4.2.3c. The tubes and tube sheet are analyzed and confirmed to withstand the maximum accident loading conditions as they are defined in Subsection 3.9.1. Further consideration is given in Subsection 5.4.2.3d to the effect of tube wall thinning on accident stresses.

5.4.2.2 Design Description

The steam generator is a Model F, vertical shell and U-tube evaporator, with integral moisture separating equipment. Figure 5.4-4 shows the model, indicating several of its improved design features which are described in the following paragraphs.

On the primary side, the reactor coolant flows through the inverted U-tubes, entering and leaving through nozzles located in the hemispherical bottom head of the steam generator. The head is divided into inlet and outlet chambers by a vertical divider plate extending from the apex of the head to the tube sheet.

Steam is generated on the shell side, flows upward and exits through the outlet nozzle at the top of the vessel. Feedwater enters the steam generator at an elevation above the top of the U-tubes, through a feedwater nozzle. The water is distributed circumferentially around the steam generator by a feedwater ring and then flows through an annulus between the tube wrapper and shell. The feedwater enters the ring via a welded thermal sleeve connection and leaves it through inverted "J" tubes located at the flow holes which are at the top of the ring. The "J" tubes are arranged to distribute the bulk of the colder feedwater to the hot leg side of the tube bundle. The feed ring is designed to minimize conditions which can result in water hammer occurrences in the feedwater piping. At the bottom of the wrapper, the water is directed toward the center of the tube bundle by a flow distribution baffle. This baffle arrangement serves to minimize the tendency in the relatively low velocity fluid for sludge deposition. Flow blocking devices discourage the water from flowing up the bypass lane, as it enters the tube bundle where it is converted to a steam-water mixture. Subsequently, the steam-water mixture from the tube bundle rises into the steam drum section, where 16 individual centrifugal moisture separators remove most of the entrained water from the steam. The steam continues to the secondary separators for further moisture removal, increasing its quality to a designed minimum of 99.75 percent. The moisture separators direct the separated water, which is combined with entering feedwater to flow back down the annulus between the wrapper and shell for recirculation through the steam generator. The dry steam exits from the steam generator through the outlet nozzle which is provided with a steam flow restrictor, described in Subsection 5.4.4.

5.4.2.3 Design Evaluation

a. Forced Convection

The effective heat transfer coefficient is determined by the physical characteristics of the Model F steam generator and the fluid conditions in the primary and secondary systems for the "nominal" 100 percent design case. It includes a conservative allowance for fouling and uncertainty. A designed heat transfer area is provided to permit the achievement of full design heat removal rate.

b. Natural Circulation Flow

The driving head created by the change in coolant density as it is heated in the core and rises to the outlet nozzle initiates convection circulation. This circulation is enhanced by the fact that the steam generators, which provide a heat sink, are at a higher elevation than the reactor core which is the heat source. Thus, natural circulation is provided for the removal of decay heat during hot shutdown in the unlikely event of loss of forced circulation.

c. Mechanical and Flow Induced Vibration Under Normal Operating Conditions

In the design of the steam generators, the possibility of degradation of tubes due to either mechanical or flow induced excitation is thoroughly evaluated. This evaluation includes detailed analysis of the tube support systems as well as an extensive research program with tube vibration model tests and instrumentation of an operating Model F steam generator.

In evaluating tube degradation due to vibration, consideration is given to sources of excitation such as those generated by primary fluid flowing within the tubes, mechanically induced vibration and secondary fluid flow on the outside of the tubes. During normal operation, the effects of primary fluid flow within the tubes and mechanically induced vibration are considered to be negligible and should cause little concern. Thus, the primary source of tube vibrations is the hydrodynamic excitation by the secondary fluid impinging on the outside surface of the tubes. Three vibration mechanisms have been identified in tube bundle arrays:

1. Vortex shedding

2. Fluidelastic excitation

3. Turbulence.

Vortex shedding is not expected to produce a mechanism for vibration in close-arrayed tube bundles. There are several reasons why this happens:

1. Flow turbulence in the downcomer and tube bundle inlet region may inhibit the formation of Von Karman's vortex train.

2. The spatial variations of cross flow velocities along the tube preclude vortex shedding at a single frequency.

3. The axial flow velocity components existing on the tubes is expected to reduce the potential for the formation of Von Karman vortex sheets.

Fluidelastic vibration analytical model analysis computed fluidelastic stability ratios to be less than 1.0 indicating that the tubes are stable relative to fluidelastic excitation.

Fluidelastic excitation was not observed during prototypical and operational flow testing. Therefore, fluidelastic excitation is excluded from consideration as a factor in steam generator tube bundle vibrations.

Flow vibrations due to fluid turbulence induce stresses in the tubes that are two orders of magnitude below the endurance limit (30,000 psi) of the tube material. Therefore, the vibration contribution to fatigue degradation from flow-induced vibration is not anticipated during normal operation.

Summarizing the results of analysis and tests of the Model F steam generator tubes for vibration, it can be stated that a check of all modes of tube vibration mechanisms has been completed. Conclusions can be drawn that the primary source of tube vibration is cross-flow turbulence, that the amplitude of the tube vibration is small, and that fatigue degradation due to flow-induced vibration is not anticipated.

The impact of operation of Seabrook Station at a power level of 3678 MWt has been evaluated and it is concluded that significant levels of vibration will not occur from the fluidelastic, vortex shedding, or turbulent mechanisms. The projected level of tube wear as a result of vibration will remain small and will not result in unacceptable tube wear.

d. Allowable Tube Wall Thinning Under All Plant Conditions

An analysis has been performed to define the structural limits for an assumed uniform thinning mode of degradation in both the axial and circumferential directions at a power level of 3678 MWt for Seabrook Unit 1. The assumption of uniform thinning is generally regarded to result in a conservative structural limit for all flaw types occurring in the field. The allowable tube repair limit, in accordance with RG 1.121, is obtained by incorporating into the structural limit a growth allowance for continued operation until the next scheduled inspection, as well as an allowance for eddy current measurement uncertainty.

Calculations have been performed to establish the tube structural limit for the straight leg (free span) region of the tube for degradation over an unlimited axial length, and for degradation over limited axial extent at the tube support plate (TSP), the flow distribution baffle (FDB), and anti-vibration bar intersections for the 3678 MWT power level conditions at Seabrook Station.

The minimum structural limit is calculated to be 57.5% allowable tube wall loss for a straight length location at the low T_{avg} condition at a power level of 3678 MWt. A steam generator tube with wall thinning to this extent can withstand normal operating and accident condition loadings and meet the stress limits as defined by the ASME Code.

The results of a study made on "D series" (0.75 inch nominal diameter, 0.043 inch nominal wall thickness) tubes under accident loadings are discussed in Reference 3. These results demonstrate that a minimum wall thickness of 0.026 inches would have a maximum faulted condition stress (i.e., due to combined LOCA and safe shutdown earthquake loads) that is less than the allowable limit. This thickness is 0.010 inches less than the minimum "D series" tube wall thickness of 0.039 inches which is reduced to 0.036 inches by the assumed general corrosion and erosion rate. Thus, an adequate safety margin is exhibited. The corrosion rate is based on a conservative weight loss rate of Inconel tubing in flowing 650°F primary side reactor coolant fluid. The weight loss, when equated to a thinning rate and projected over a 40-year design operating objective, with appropriate reduction after initial hours, is equivalent to 0.083 mils thinning. The assumed corrosion rate of 3 mils leaves a conservative 2.917 mils for general corrosion thinning on the secondary side.

The Model F steam generator has to be analyzed using similar assumptions of general corrosion and erosion rates. The nominal dimensions of tubing used in the Model F design are 0.688 inch 0D by 0.040 inch wall thickness; the minimum wall thickness of such tubing is 0.036 inches. For Seabrook, the minimum allowable tube wall thickness to withstand postulated accident condition loadings has been calculated to be 0.014 inch. Reducing the minimum wall thickness of 0.036 inch to 0.033 inch by an assumed general corrosion and erosion rate over a 40-year period of 0.003 inch, results in a margin of 0.019 inch.

5.4.2.4 Steam Generator Materials

a. Selection and Fabrication of Materials

All pressure boundary materials used in the steam generator are selected and fabricated in accordance with the requirements of Section III of the ASME Code. A general discussion of materials specifications is given in Subsection 5.2.3, with types of materials listed in Table 5.2-2 and Table 5.2-3. Fabrication of reactor coolant pressure boundary materials is also discussed in Subsection 5.2.3, particularly in Subsections 5.2.3.3 and 5.2.3.4.

Testing has justified the selection of corrosion resistant Inconel-600, a nickel-chromium-iron alloy (ASME SB-163), for the steam generator tubes. The channel head divider plate is Inconel (ASME SB-168). The interior surfaces of the reactor coolant channel head, nozzles, and manways are clad with austenitic stainless steel. The primary side of the tube sheet is weld clad with Inconel (ASME SFA-5.14). The tubes are then seal welded to the tube sheet cladding. These fusion welds are performed in compliance with Sections III and IX of the ASME Code, and are dye penetrant inspected and leak proof tested before each tube is hydraulically expanded the full depth of the tube sheet bore.

Code cases used in material selection are discussed in Subsection 5.2.1. The extent of conformance with Regulatory Guides 1.84, "Design and Fabrication Code Case Acceptability ASME Section III Division 1," and 1.85 "Materials Code Case Acceptability ASME Section III Division 1," is discussed in Section 1.8.

During manufacture, cleaning is performed on the primary and secondary sides of the steam generator in accordance with written procedures which follow the guidance of Regulatory Guide 1.37, "Quality Assurance Requirements for Cleaning of Fluid Systems and Associated Components of Water-Cooled Nuclear Power Plants," and the ANSI Standard N45.2.1-1973, "Cleaning of Fluid Systems and Associated Components for Nuclear Power Plants." Onsite cleaning and cleanliness control also follow the guidance of Regulatory Guide 1.37, as discussed in Section 1.8. Cleaning process specifications are discussed in Subsection 5.2.3.4.

The fracture toughness of the materials is discussed in Subsection 5.2.3.3. Adequate fracture toughness of ferritic materials in the reactor coolant pressure boundary is provided by compliance with 10 CFR 50, Appendix G, "Fracture Toughness Requirements," and with paragraph NB-2300 of Section III of the ASME Code.

b. Steam Generator Design Effects on Materials

Several features have been introduced into the Model F steam generator to minimize the deposition of contaminants from the secondary side flow. Such deposits could otherwise produce a local environment in which a condition could develop and result in material corrosion. The support plates are made of corrosion resistant stainless steel 405 alloy and incorporate a four-lobe-shaped tube hole design that provides greater flow area adjacent to the tube outer surface and eliminates the need for interstitial flow holes. The resulting increase in flow provides higher sweeping velocities at the tube/tube support plate intersections. Figure 5.4-3 is an illustration of the "quatrefoil" broached holes. This modification in the support plate design is a major factor contributing to the increased circulation ratio. The increased circulation results in increased flow in the interior of the bundle, as well as increased horizontal velocity across the tube sheet, which reduces the tendency for sludge deposition. The effect of the increased circulation on the vibrational stability of the tube bundle has been analyzed with consideration given to flow induced excitation frequencies. The unsupported span length of tubing in the U-bend region and the corresponding optimum number of anti-vibration bars has been determined. The anti-vibration bars are fabricated from square Inconel barstock which is then chromium plated to improve frictional characteristics. Also, due to the increased circulation ratio, the moisture separating equipment has been modified to maintain an adequate margin with respect to moisture carryover. To provide added strength as well as resistance to vibration, the quatrefoil tube support plate thickness has been increased.

In addition, 13 peripheral supports also provide stability to the plates so that tube fretting or wear due to flow induced plate vibrations at the tube support contact regions is reduced.

Assurance against significant flow induced tube vibration has been obtained by a combination of analysis and testing.

Combining both vortex shedding and turbulence effects in a conservative manner, the maximum predicted local tube wear depth over a 40-year operating design objective remains less than 0.006 inches with the operation of Seabrook Unit 1 at a power level of 3678 MWt.

This value is considerably below the plugging limit for a Model F steam generator tube.

c. Compatibility of Steam Generator Tubing with Primary and Secondary Coolants

As mentioned in Subsection 5.4.2.4a, corrosion tests, which subjected the steam generator tubing material, Inconel-600 (ASME SB-163), to simulated steam generator water chemistry, have indicated that the loss due to general corrosion over the 40-year design operating objective is insignificant compared to the tube wall thickness. Testing to investigate the susceptibility of heat exchanger construction materials to stress corrosion in caustic and chloride aqueous solutions has indicated that Inconel-600 has resisted general and pitting-type corrosion in severe operating water conditions. Many reactor years of successful operation have shown the same low general corrosion rates as indicated by the laboratory tests.

Recent operating experience, however, has revealed areas on secondary surfaces where localized corrosion rates were significantly greater than the low general corrosion rates. Both intergranular stress corrosion and tube wall thinning were experienced in localized areas, although not simultaneously at the same location or under the same environmental conditions (water chemistry, sludge composition).

The adoption of the All Volatile Treatment (AVT) control program minimizes the possibility for recurrence of the tube wall thinning phenomenon. Successful AVT operation requires maintaining low concentrations of impurities in the steam generator water, thus reducing the potential for formation of highly concentrated solutions in low flow zones, which is the precursor of corrosion. By restriction of the total alkalinity in the steam generator and prohibition of extended operation with free alkalinity, the AVT program should minimize the possibility for recurrence of intergranular corrosion in localized areas due to excessive levels of free caustic.

Laboratory testing has shown that the Inconel-600 tubing is compatible with the AVT environment. Isothermal corrosion testing in high purity water has shown that commercially produced Inconel-600 exhibiting normal microstructures tested at normal engineering stress levels does not suffer intergranular stress corrosion cracking in extended exposure to high temperature water. These tests also showed that no general type of corrosion occurred. A series of autoclave tests in reference secondary water with planned excursions have produced no corrosion attack after 1,938 days of testing on any as-produced Inconel-600 tube samples.

Model boiler tests have been used to evaluate the AVT chemistry guidelines adopted in 1974. The guidelines appear to be adequate to preserve tube integrity, with one significant alteration: operation with contaminant ingress must be limited.

Additional extensive operating data are presently being accumulated with the conversion to AVT chemistry. A comprehensive program of steam generator inspections, including the recommendations of Regulatory Guide 1.83, "In-Service Inspection of Pressurized Water Reactor Steam Generator Tubes," with the exceptions as stated in Section 1.8, should provide for detection of any degradation that might occur in the steam generator tubing.

Increased margin against stress corrosion cracking has been obtained by the use of thermally treated Inconel-600 tubing. Thermal treatment of Inconel tubes has been shown to be particularly effective in resisting caustic corrosion. Tubing used in the Model F is thermally treated in accordance with a laboratory derived treatment process.

The tube support plates used in the Model F are ferritic stainless steel, which has been shown in laboratory tests to be resistant to corrosion in the AVT environment. If corrosion of ferritic stainless steel were to occur, due to concentration of contaminants, the volume of the corrosion products is essentially equivalent to the volume of the parent material consumed. This would be expected to preclude denting. The support plates are also designed with quatrefoil tube holes rather than cylindrical holes. The quatrefoil tube hole design promotes high velocity flow along the tube, and is expected to minimize the accumulation of impurities at the support plate locations.

Additional measures are incorporated in the Model F design to prevent areas of dryout in the steam generator and accumulations of sludge in low velocity areas. Modifications to the wrapper have increased water velocities across the tube sheet. A flow distribution baffle is provided which forces the low flow area to the center of the bundle. Increased capacity blowdown pipes have been added to enable continuous blowdown of the steam generators at a high volume. The intakes of these blowdown pipes are located below the center cutout section of the flow distribution baffle in the low velocity region where sludge may be expected to accumulate. Continuous blowdown should provide protection against inleakage of impurities from the condenser.

The impact of operating Seabrook Unit 1 at a power level of 3678 MWt on steam generator water chemistry has been considered. The occurrence of stress corrosion cracking and other forms of degradation that might occur at current and enhanced rates will be found using the non-destructive examination techniques specified in the degradation assessment that must be completed for subsequent plant outages. The degradation assessment is the key document in planning for the SG tube inspection, where inspection plans and related actions are determined, documented, and communicated prior to the outage. The degradation assessment provides assurance that non-destructive examination detection and sizing performance is known and can be accounted for in the condition monitoring and operational assessments required by NEI 97-06, Rev. 3, "Steam Generator Program Guidelines."

d. Cleanup of Secondary Side Materials

Several methods are employed to clean operating steam generators of corrosion causing secondary side deposits. Sludge lancing, a procedure in which a hydraulic jet inserted through an access opening (handhole) loosens deposits which are removed by means of a suction pump, can be performed when the need is indicted by the results of steam generator tube inspection. Six 6-inch access ports are provided for sludge lancing and inspection. Three of these are located above the tube sheet and three above the flow distribution baffle. Continuous blowdown is performed to monitor water chemistry. The location of the blowdown piping suction, adjacent to the tube sheet and in a region of relatively low flow velocity, facilities the removal of particulate impurities to minimize the accumulation on the tube sheet.

5.4.2.5 Steam Generator In-Service Inspection

a. Design Provisions for Inspection

The Seabrook Station steam generators have been designed to facilitate the inspection and repair of all Code Class 1 and 2 components, including the individual steam generator tubes.

1. Access to the vessel welds is provided by means of reusable fiberglass blanket with stainless steel jacket insulation panels which can be quickly and easily removed to expose the welds and the adjacent areas.

2. Access for inspection of the steam generator internals is provided by means of four manways: two providing access to the two chambers of the reactor coolant channel-head and two providing access to the steam drum moisture separators. Six-inch hand holes have been provided, three just above the tube sheet and three just above the distribution baffle. Access to the U-bends is provided through each of the three deck plates.

b. Inspection Plans

In general, the in-service inspection program for the steam generators will be conducted in accordance with the ASME Boiler and Pressure Vessel Code, Section XI, Subarticles IWB-2500, IWC-2500 and Regulatory Guide 1.83, Rev. 1.

Prior to startup, a baseline inspection will be performed on all Class 1 and 2 components. Permanent records of baseline and in-service inspections will be maintained. Detailed plans for baseline and in-service inspection of all Code Class 1 and 2 components of the steam generators, including criteria for tube plugging, are presented in Technical Specification 3/4.4.5, Steam Generators.

Volumetric, surface and visual examinations of the following components will be performed:

1. Circumferential and meridional head welds (primary side), circumferential and longitudinal shell welds, tube-sheet-to-head and tube-sheet-to-shell welds, nozzle to vessel welds (primary side), nozzle inside radius sections (primary side), steam generator tubing, class 1 bolts and studs over 2 inch diameter, in place, and class 2 bolts and studs over 2 inch diameter will be examined by volumetric methods.

2. Nozzle-to-safe-end welds, class 1 bolts and studs over 2 inch diameter when removed, and nozzle-to-vessel welds on the secondary side over ½ inch nominal vessel wall thickness will be examined by volumetric and surface methods.

3. Secondary side nozzle-to-vessel welds less than ½ inch nominal vessel wall thickness will be examined using surface methods.

4. Surfaces of pressure-retaining bolting, and nonpressure-retaining bolts and studs 2 inch diameter and smaller will be visually examined using VT-1 methods.

5. Pressure retaining components will be visually examined during leak tests or hydrotest using VT-2 methods.

6. Component supports will be examined using VT-3 methods or VT-4 methods for mechanical or hydraulic supports.

c. Steam Generator Tubing Inspection

Steam generator tubing in-service inspection will be performed in accordance with the requirements of Regulatory Guide 1.83, Rev. 1. The details of the in-service inspection program, such as a description of the equipment, procedures, sensitivity of the examination and recording methods, criteria used to select tubes for examination, inspection intervals and actions to be taken if defects are found (including criteria for plugging defective tubes), are presented in Technical Specification 3/4.4.5, Steam Generators.

The tubing examination equipment and procedures will be capable of detecting and locating defects with a penetration of 20 percent or more of wall thickness. The recommendations of Regulatory Guide 1.121, "Bases for Plugging Degraded PWR Steam Generator Tubes" will be followed for the resolution of problems regarding degraded tubes.

The allowable Steam Generator Tube Plugging (SGTP) limit is 10% of the total tubes in all four steam generators. This limit is uniform. That is, no individual steam generator may exceed 10% tube plugging. This limit is an input assumption to the Seabrook Station safety analyses. Additional discussion of the SGTP limit is found in UFSAR section s15.0.3.5.2 and 15.6.5.2.

5.4.2.6 Quality Assurance

The steam generator quality assurance program is given in Table 5.4-4.

Radiographic inspection and acceptance standard will be in accordance with the requirements of Section III of the ASME Code.

Liquid penetrant inspection is performed on weld deposited tube sheet cladding, channel head cladding, divider plate to tube sheet and to channel head weldments, tube-to-tube sheet weldments, and weld deposit cladding. Liquid penetrant inspection and acceptance standards are in accordance with the requirements of Section III of the ASME Code.

Magnetic particle inspection is performed on the tube sheet forging, channel head casting, nozzle forgings, and the following weldments:

a. Nozzle to shell

b. Support brackets

c. Instrument connection (secondary)

d. Temporary attachments after removal

e. All accessible pressure retaining welds after hydrostatic test.

Magnetic particle inspection and acceptance standards are in accordance with requirements of Section III of the ASME Code.

Ultrasonic tests are performed on the tube sheet forging, tube sheet cladding, secondary shell and head plate, and nozzle forgings.

The heat transfer tubing is subjected to eddy current testing and ultrasonic examination.

Hydrostatic tests are performed in accordance with Section III of the ASME Code.

5.4.3 Reactor Coolant Piping

5.4.3.1 Design Bases

The RCS piping is designed and fabricated to accommodate the system pressures and temperatures attained under all expected modes of plant operation or anticipated system interactions. Stresses are maintained within the limits of Section III of the ASME Boiler and Pressure Vessel Code. Code and material requirements are provided in Section 5.2.

Materials of construction are specified to minimize corrosion/erosion and to ensure compatibility with the operating environment.

The piping in the RCS is Safety Class 1, and is designed and fabricated in accordance with ASME Code, Section III, Class 1 requirements.

Stainless steel pipe conforms to ANSI B36.19 for sizes ½ inch through 12 inches and wall thickness Schedules 40S through 80S. Stainless steel pipe outside the scope of ANSI B36.19 conforms to ANSI B36.10.

The minimum wall thickness of the loop pipe and fittings are not less than that calculated using the ASME Code, Section III, Class 1 formula of paragraph NB-3641.1(3) with an allowable stress value of 17,550 psi. The pipe wall thickness for the pressurizer surge line is Schedule 160. The minimum pipe bend radius is 5 nominal pipe diameters, and ovality does not exceed 6 percent.

All butt welds, branch connection nozzle welds, and boss welds are of a full penetration design.

Processing and minimization of sensitization are discussed in Subsection 5.2.3.

Flanges conform to ANSI B16.5.

Socket weld fittings and socket joints conform to ANSI B16.11.

In-service inspection is discussed in Subsection 5.2.4.

5.4.3.2 Design Description

Principal design data for the reactor coolant piping are given in Table 5.4-5.

Reactor coolant pipes are forged. Reactor coolant fittings are cast. Both pipe and fittings are seamless without longitudinal or electroslag welds, and comply with the requirements of the ASME Code, Section II, (Parts A and C), Section III, and Section IX.

The RCS piping is specified in the smallest sizes consistent with system requirements. This design philosophy results in the reactor inlet and outlet piping diameters given in Table 5.4-5. The line between the steam generator and the pump suction is larger, to reduce pressure drop and to improve flow conditions to the pump suction.

The reactor coolant piping and fittings which make up the loops are austenitic stainless steel. There will be no electroslag welding on these components. All smaller piping which comprise part of the RCS such as the pressurizer surge line, spray and relief line, loop drains and connecting lines to other systems are also austenitic stainless steel. The nitrogen supply line for the pressurizer relief tank is carbon steel. All joints and connections are welded, except for the pressurizer code safety valves, where flanged joints are used. Thermal sleeves are installed on the pressurizer spray line nozzle and on the pressurizer surge nozzle located on the bottom of the pressurizer vessel.

All piping connections from auxiliary systems are made above the horizontal centerline of the reactor coolant piping, with the exception of:

a. Residual heat removal pump suction lines, which are 45 degrees down from the horizontal centerline. This enables the water level in the RCS to be lowered in the reactor coolant pipe while continuing to operate the Residual Heat Removal System, should this be required for maintenance.

b. Loop drain lines and the connection for temporary level measurement of water in the RCS during refueling and maintenance operation.

c. The differential pressure taps for flow measurement, which are downstream of the steam generators on the first 90 degree elbow.

d. The pressurizer surge line, which is attached at the horizontal centerline.

e. The 3-inch charging line connections, the 1-inch excess letdown connection and the 4-inch pressurizer spray line nozzles with scoops which are all located on the horizontal centerline.

Penetrations into the coolant flow path are limited to the following:

a. The pressurizer spray line inlet connections extend into the cold leg piping in the form of a scoop so that the velocity head of the reactor coolant loop flow adds to the spray driving force.

b. The reactor coolant sample system taps protrude into the main stream to obtain a representative sample of the reactor coolant.

c. The narrow range RCS resistance temperature detectors (RTDs) are mounted in thermowells in the hot and cold legs. With one exception on each hot leg, the original bypass scoops are machined and used to house the thermowells. One scoop on each hot leg, however, has been capped and the thermowell has been relocated to an independent boss. The independent boss is located on the same cross-sectional plane as the scoops on loops A, B, and D. On loop C, the boss has been relocated to a position approximately 12 inches upstream of the scoops location at approximately 105°.

d. The wide range temperature detectors are located in resistance temperature detector wells that extend into both the hot and cold legs of the reactor coolant pipes.

Separate thermowell-mounted RTDs for each reactor coolant loop hot and cold leg are provided so that individual temperature signals may be developed for use in the reactor control and protection system. A representative hot leg temperature is obtained by averaging three thermowell-mounted RTDs.

Signals from the thermowell-mounted RTDs are used to compute the reactor coolant ΔT (temperature of the hot leg, T_{hot}, minus the temperature of the cold leg, T_{cold}) and an average reactor coolant temperature (T_{avg}). The T_{avg} for each loop is indicated on the main control board.

The RCS piping includes those sections of piping interconnecting the reactor vessel, steam generator, and reactor coolant pump. It also includes the following:

a. Charging line and alternate charging line from the system isolation valve up to the branch connections on the reactor coolant loop.

b. Letdown line and excess letdown line from the branch connections on the reactor coolant loop to the system isolation valve.

c. Pressurizer spray lines from the reactor coolant cold legs to the spray nozzle on the pressurizer vessel.

d. Residual heat removal lines to or from the reactor coolant loops up to the designated check valve or isolation valve.

e. Safety injection lines from the designated check valve to the reactor coolant loops.

f. Accumulator lines from the designated check valve to the reactor coolant loops.

g. Loop drain, sample*, and instrument* lines to or from the designated isolation valve to or from the reactor coolant loops.

h. Pressurizer surge line from one reactor coolant loop hot leg to the pressurizer vessel inlet nozzle.

i. Resistance temperature detector scoop element, pressurizer spray scoop, sample connection* with scoop, reactor coolant temperature element installation boss, and the temperature element well itself.

---

* Lines with a $^{3}/_{8}$ inch or less flow restricting orifice qualify as Safety Class 2; in the event of a break in one of these Safety Class 2 lines, the normal makeup system is capable of providing makeup flow while maintaining pressurizer water level.

j. All branch connection nozzles attached to reactor coolant loops.

k. Pressure relief lines from nozzles on top of the pressurizer vessel up to and through the power-operated pressurizer relief valves and pressurizer safety valves.

l. Seal injection water lines to the reactor coolant pump to the designated check valve (injection line).

m. Auxiliary spray line from the isolation valve to the pressurizer spray line header.

n. Sample lines* from pressurizer to the isolation valve.

Details of the materials of construction and codes used in the fabrication of reactor coolant piping and fittings are discussed in Section 5.2.

5.4.3.3 Design Evaluation

Piping load and stress evaluation for normal operating loads, seismic loads, blowdown loads, and combined normal, blowdown and seismic loads is discussed in Section 3.9(N).

a. Material Corrosion/Erosion Evaluation

The water chemistry is selected to minimize corrosion. A periodic analysis of the coolant chemical composition is performed to verify that the reactor coolant quality meets the specifications.

The design and construction are in compliance with the ASME Code, Section XI. Pursuant to this, all pressure containing welds out to the second valve that delineate the RCS boundary are available for examination with removable insulation.

Components constructed with stainless steel will operate satisfactorily under normal plant chemistry conditions in pressurized water reactor systems, because chlorides, fluorides, and particularly oxygen, are controlled to very low levels using the guidance in EPRI PWR Primary Water Chemistry Guidelines and implemented in the Chemistry Manual.

* Lines with a 3/8 inch or less flow restricting orifice qualify as Safety Class 2; in the event of a break in one of these Safety Class 2 lines, the normal makeup system is capable of providing makeup flow while maintaining pressurizer water level.

Periodic analysis of the coolant chemical composition is performed to monitor the adherence of the system to desired reactor coolant water quality. Maintenance of the water quality to minimize corrosion is accomplished using the Chemical and Volume Control System and sampling system which are described in Chapter 9.

b. Sensitized Stainless Steel

Sensitized stainless steel is discussed in Subsection 5.2.3.

c. Contaminant Control

Contamination of stainless steel and Inconel by copper, low melting temperature alloys, mercury and lead is prohibited. Colloidal graphite is the only permissible thread lubricant.

Except for those times when thermal insulation is removed for the installation of new thermal insulation (due to mechanical damage or age), the austenitic stainless steel surfaces are cleaned and analyzed to a halogen limit specified by the NSSS vendor.

5.4.3.4 Tests and Inspections

The RCS piping quality assurance program is given in Table 5.4-6.

Volumetric examination is performed throughout 100 percent of the wall volume of each pipe and fitting, in accordance with the applicable requirements of Section III of the ASME Code for all pipe 27½ inches and larger. All unacceptable defects are eliminated in accordance with the requirements of the same section of the code.

A liquid penetrant examination is performed on both the entire outside and inside surfaces of each finished fitting in accordance with the criteria of the ASME Code, Section III. Acceptance standards are in accordance with the applicable requirements of the ASME Code, Section III.

The pressurizer surge line conforms to SA-376, Grade 304, 304N, or 316 with supplementary requirements S2 (transverse tension tests), and S6 (ultrasonic test). The S2 requirement applies to each length of pipe. The S6 requirement applies to 100 percent of the piping wall volume.

The end of pipe sections, branch ends and fittings are machined back to provide a smooth weld transition adjacent to the weld path.

5.4.4 Main Steam Line Flow Restrictor

5.4.4.1 Design Basis

The outlet nozzle of the steam generator is provided with a flow restrictor designed to limit steam flow in the unlikely event of a break in the main steam line. A large increase in steam flow will create a backpressure which limits further increase in flow. Several protective advantages are thereby provided: rapid rise in containment pressure is prevented, the rate of heat removal from the reactor coolant is kept within acceptable limits, thrust forces on the main steam line piping are reduced, and stresses on internal steam generator components, particularly the tube sheet and tubes, are limited. The resistor is also designed to minimize the unrecovered pressure loss across the restrictor during normal operation.

5.4.4.2 Design Description

The flow restrictor consists of seven Inconel (ASME SB-163) venturi inserts which are inserted into the holes in an integral steam outlet nozzle forging. The inserts are arranged with one venturi at the centerline of the outlet nozzle and the other six equally spaced around it. After insertion into the nozzle forging holes, the Inconel venturi inserts are welded to the Inconel cladding on the inner surface of the forgings.

5.4.4.3 Design Evaluation

The flow restrictor design has been sufficiently analyzed to assure its structural adequacy. The equivalent throat diameter of the steam generator outlet is 16 inches, and the resultant pressure drop through the restrictor at 100 percent steam flow is approximately 3.28 psi. This is based on a design flow rate of 4.135×10^6 lb/hr. Materials of construction and manufacturing of the flow restrictor are in accordance with Section III of the ASME Code.

5.4.4.4 Tests and Inspections

Since the restrictor is not a part of the steam system boundary, no tests and inspection beyond those during fabrication are anticipated.

5.4.5 Main Steam Isolation System

The Main Steam Isolation System is composed of the main steam isolation valves, actuators, logic cabinets and portions of the Engineered Safety Features Actuation System. The MSIVs are located in the mainsteam and feedwater pipe chases adjacent to the Containment.

5.4.5.1 Design Bases

a. Isolate the steam generators and main steam lines in the event of a main steam or feedwater line rupture to prevent the uncontrolled blowdown of more than one steam generator.

b. Isolate the Containment from the outside environment in the event of a design basis accident, upon receipt of containment isolation signals as described in Subsection 6.2.4.

5.4.5.2 Description

The main steam isolation system components are described in Section 10.3 and Subsection 6.2.4.

5.4.5.3 System Operation

The isolation system operation is described in Subsection 6.2.4. The isolation valve operation is described in Subsection 10.3.2.

5.4.5.4 Design Evaluation

The main steam isolation valves will close in 3 to 5 seconds after receipt of a signal from the Engineered Safety Features Actuation System, and are capable of stopping flow from either the forward or reverse directions.

Immediately after a pipe break and until isolation occurs, all steam generators will be partially blown down. After isolation occurs, only the inventory portions of the main steam piping will be blown down, if the break is downstream of an isolation valve. If the break occurs upstream of an isolation valve, either inside or outside Containment, one steam generator will be blown down.

5.4.5.5 Tests and Inspections

See Subsection 10.3.2 for discussion of MSIV testing.

5.4.6 Reactor Core Isolation Cooling System

Not applicable to Seabrook.

5.4.7 Residual Heat Removal System

The Residual Heat Removal System (RHRS) transfers heat from the Reactor Coolant System (RCS) to the Component Cooling System (CCS) to reduce the temperature of the reactor coolant to the cold shutdown temperature at a controlled rate during the second part of normal plant cooldown, and maintains this temperature until the plant is started up again.

Parts of the RHRS also serve as parts of the ECCS during the injection and recirculation phases of a LOCA (see Section 6.3).

The RHRS also is used to transfer refueling water between the refueling cavity and the refueling water storage tank at the beginning and end of the refueling operations.

Nuclear plants employing the same RHRS design as the Seabrook Station are given in Section 1.3.

5.4.7.1 Design Bases

RHRS design parameters are listed in Table 5.4-7.

The RHRS is placed in operation approximately four hours after reactor shutdown, when the temperature and pressure of the RCS are approximately 350°F and 365 psig, respectively. Assuming that two heat exchangers and two pumps are in service and that each heat exchanger is supplied with component cooling water at 3000 gpm, the RHRS is designed to reduce the temperature of the reactor coolant from 350°F to 125°F in 23.9 hours. The time required under these conditions to reduce the reactor coolant temperature from 350°F to 212°F is less than 7 hours. Maximum anticipated component cooling water temperature is 102°F during initial RHRS operation; however, it will approach 85°F at 24 hours after reactor shutdown. The heat load handled by the RHRS during the cooldown transient includes residual and decay heat from the core, coolant sensible heat, and reactor coolant pump heat. The design heat load is based on the decay heat fraction that exists at 24 hours following reactor shutdown from an extended run at full power. The normal cooldown curve is shown in Figure 5.4-5.

Assuming that only one heat exchanger and pump are in service and that the heat exchanger is supplied with component cooling water at 3000 gpm, the RHRS is capable of reducing the temperature of the reactor coolant from 350°F to 200°F within 33.2 hours. The time required, under these conditions, to reduce reactor coolant temperature from 350°F to 212°F is less than 25 hours. Maximum anticipated component cooling water temperature is 102°F during initial RHRS operation; however, it will approach 85°F at 120 hours after reactor shutdown. The single train RHR cooldown curve is shown on Figure 5.4-6.

Assuming 3000 gpm water at 85°F with 2 pumps and 2 heat exchangers in operation, the system is cooled from 350°F to 125°F so that 125°F is achieved within 24 hours after shutdown. As the cooldown proceeds, the CCW temperature may rise as high as 102°F but will drop off again to 85°F.

The RHRS is designed to be isolated from the RCS whenever the RCS pressure exceeds the RHRS design pressure. The RHRS is isolated from the RCS on the suction side by two motor-operated valves in series on each suction line. Each motor-operated valve is interlocked to prevent its opening if RCS pressure is greater than that which could result in the RHR system design pressure being exceeded. (This includes the effects of instrument uncertainty and bistable deadband.) Refer to the Station Technical Specifications. (See Figure 5.4-7.) The RHRS is isolated from the RCS on the discharge side by two check valves in each return line. Also provided on the discharge side is a normally open motor-operated valve downstream of each RHRS heat exchanger. (These check valves and motor-operated valves are not considered part of the RHRS; they are shown as part of the ECCS, see Figure 6.3-1, Figure 6.3-2, Figure 6.3-3, Figure 6.3-4 and Figure 6.3-5.)

Those valves used for hot leg injection are in the residual heat removal pump and safety injection pump discharge and do not qualify as high-to-low pressure isolation barriers since they are backed up by normally closed motor-operated gate valves which form an additional high-to-low pressure barrier. Those valves used for charging/safety injection are in the high pressure discharge piping of the charging pumps and do not qualify as high-to-low pressure isolation barriers. Additionally, these check valves are backed up by normally closed motor-operated gate valves.

Although they are backed up by normally closed motor-operated gate valves, periodic leakage testing is currently performed for the following hot leg and hi-head check valves as stated in Table 5.2-7 and Section 6.3.4.2:

RH-V-0050, RH-V-0051, RH-V-0052, RH-V-0053

SI-V-0081, SI-V-0082, SI-V-0086, SI-V-0087

SI-V-0106, SI-V-0110,

SI-V-0140, SI-V-0144, SI-V-0148, SI-V-0152 and S-IV-0156

The check valves in the cold leg injection paths do form high-to-low pressure isolation barriers.

Appropriate connections for leak testing these valves are shown in Figure 5.4-9, Figure 5.4-10, Figure 5.4-11, and Figure 6.3-1, Figure 6.3-2, Figure 6.3-3, Figure 6.3-4, Figure 6.3-5.

Each inlet line to the RHRS is equipped with a pressure relief valve designed to relieve the combined flow of all the charging pumps at the relief valve set pressure. These relief valves also protect the system from inadvertent overpressurization during plant cooldown or startup.

Relief valves have been installed to provide thermal relief protection for water trapped between the redundant RHR suction isolation valves (RC-V22, -V23 in line 13-1-2501-12, and RC-V87, -V88 in line 58-1-2501-12). These lines and valving will relieve excessive pressure to the pressurizer relief tank.

Each discharge line from the RHRS to the RCS is equipped with a pressure relief valve designed to relieve the maximum possible back leakage through the valves isolating the RHRS from the RCS.

The RHRS is designed to be operable from the control room with limited action outside the control room for normal operation. Manual operations required of the operator are: unlocking and closing the circuit breakers for the RHR suction isolation valves, opening the suction isolation valves, positioning the flow control valves downstream of the RHRS heat exchangers, and starting the RHRS pumps. Because of its redundant two train design, the RHRS is designed to accept all major component single failures, with the only effect being an extension in the required cooldown time. For two low probability electrical system single failures i.e., failure in the suction isolation valve interlock circuitry, or diesel generator failure in conjunction with loss of offsite power; limited operator action outside the control room is required to open the suction isolation valves. Manual actions are discussed in further detail in Subsections 5.4.7.2f and 5.4.7.2g. The RHRS motor-operated isolation valves located inside Containment are not susceptible to flooding following a steam line break or a loss-of-coolant accident. Although Westinghouse considers it to be of low probability, spurious operation of a single motor-operated valve can be accepted without loss of function, as a result of the redundant two train design.

In its normal function, the RHRS transfers heat from the Reactor Coolant System to the Component Cooling Water System during normal plant cooldown (two trains operating) and during plant maintenance/refueling (one train operating). For this function, connections between the two trains of residual heat removal are isolated to prevent a passive failure from affecting more than one loop.

The RHRS also serves as the low pressure pump suction of the Emergency Core Cooling System (ECCS). As discussed in Subsection 6.3.2.5, the system has been designed and proven by analysis as having the ability to withstand any single credible active failure during the injection phase (post-LOCA), or any active or passive failure during the recirculation phase. This design approach is consistent with ANSI/ANS 58.9-1981 "Single Failure Criteria for Light Water Reactor Safety-Related Fluid Systems."

Additional information about ECCS design protection for a passive failure is contained in Subsection 6.3.2.5b and a single passive failure analysis is presented in Table 6.3-6.

Missile protection, protection against dynamic effects associated with the postulated rupture of piping, and seismic design are discussed in Sections 3.5, 3.6(N), respectively.

5.4.7.2 System Design

a. Schematic Piping and Instrumentation Diagrams

The RHRS, as shown in Figure 5.4-9, Figure 5.4-10, Figure 5.4-11 and Figure 5.4-12, consists of two residual heat exchangers, two residual heat removal pumps, and the associated piping, valves, and instrumentation necessary for operational control. The inlet lines to the RHRS are connected to the hot legs of two reactor coolant loops, while the return lines are connected to the cold legs of each of the reactor coolant loops. These return lines are also the ECCS low head injection lines (see Figure 6.3-1, Figure 6.3-2, Figure 6.3-3, Figure 6.3-4 and Figure 6.3-5).

The RHRS suction lines are isolated from the RCS by two motor-operated valves in series located inside the Containment. Each discharge line is isolated from the RCS by two check valves located inside the Containment and by a normally-open motor-operated valve located outside the Containment. (The check valves and the motor-operated valve on each discharge line are not part of the RHRS; these valves are shown as part of the ECCS, see Figure 6.3-1.)

During RHRS operation, reactor coolant flows from the RCS to the residual heat removal pumps, through the tube side of the residual heat exchangers, and back to the RCS. The heat is transferred to the component cooling water circulating through the shell side of the residual heat exchanger.

Coincident with operation of the RHRS, a portion of the reactor coolant flow may be diverted from downstream of the residual heat exchangers to the Chemical and Volume Control System (CVCS) low pressure letdown line for cleanup and/or pressure control. By regulating the diverted flowrate and the charging flow, the RCS pressure may be controlled. Pressure regulation is necessary to maintain the pressure range dictated by the fracture prevention criteria requirements of the reactor vessel and by the Number 1 seal differential pressure and net positive suction head requirements of the reactor coolant pumps.

The RCS cooldown rate is manually controlled by regulating the reactor coolant flow through the tube side of the residual heat exchangers. The flow control valve in the bypass line around each residual heat exchanger automatically maintains a constant return flow to the RCS. Instrumentation is provided to monitor system pressure, temperature and total flow.

The RHRS is also used for filling the refueling cavity before refueling. Also, after refueling operations, the RHRS is used to pump the water back to the refueling water storage tank until the water level is brought down to the flange of the reactor vessel. The remainder of the water is removed via a drain connection at the bottom of the refueling canal.

When the RHRS is in operation, the water chemistry is the same as that of the reactor coolant. Provision is made for the Process Sampling System to extract samples from the flow of reactor coolant downstream of the residual heat exchangers. A local sampling point is also provided on each residual heat removal train between the pump and heat exchanger.

The RHRS also functions, in conjunction with the high head portion of the ECCS, to provide injection of borated water from the refueling water storage tank into the RCS cold legs during the injection phase following a loss-of-coolant accident.

In its capacity as the low head portion of the ECCS, the RHRS provides long-term recirculation capability for core cooling following the injection phase of the loss-of-coolant accident. This function is accomplished by aligning the RHRS to take fluid from the containment sump, cool it by circulation through the residual heat exchangers, and supply it to the core directly as well as via the centrifugal charging pumps and safety injection pumps.

The use of the RHRS as part of the ECCS is more completely described in Section 6.3.

The RHR pumps, in order to perform their ECCS function, are interlocked to start automatically on receipt of a safety injection signal (see Section 6.3).

Each RHR loop is isolated from the Reactor Coolant System by two redundant motor-operated valves. One valve in each loop is located inside the missile barrier and is powered from Train B. The redundant valve is located outside the missile barrier and is powered from Train A. This ensures that isolation can be maintained between the RHR and the RCS in the event of a single failure of the power supply.

The RHR suction isolation valves in each inlet line from the RCS are separately interlocked to prevent being opened when RCS pressure is greater than that which could result in the RHR system design pressure being exceeded. (This includes the effects of instrument uncertainty and bistable deadband.) Refer to the Station Technical Specifications. These interlocks are described in more detail in Subsections 5.4.7.2d and 7.6.2 (see Figure 5.4-7).

The RHR suction isolation valves are also interlocked to prevent their being opened unless the isolation valves in the recirculation lines from the residual heat exchanger outlets to the suctions of the safety injection pumps and centrifugal charging pumps are closed (see Figure 5.4-7).

Failure of an interlock will result in failure of a valve to open.

Failures of interlocks are inherently addressed in the failure modes and effects analyses by addressing the valves that are controlled by the interlocks.

The motor-operated valves in the RHR miniflow bypass lines are interlocked to open when the RHR pump discharge flow is less than 750 gpm and close when the flow exceeds approximately 1400 gpm (see Figure 5.4-7, sh. 2).

b. Equipment and Component Descriptions

The materials used to fabricate RHRS components are in accordance with the applicable code requirements. All parts of components in contact with borated water are fabricated or clad with austenitic stainless steel or equivalent corrosion resistant material. Component parameters are given in Table 5.4-8.

1. Residual Heat Removal Pumps

Two pumps are installed in the RHRS. The pumps are sized to deliver reactor coolant flow through the residual heat removal heat exchangers to meet the plant cooldown requirements. The use of two separate residual heat removal trains assures that cooling capacity is only partially lost should one pump become inoperative.

The residual heat removal pumps are protected from overheating and loss of suction flow by miniflow bypass lines that assure flow to the pump suction. A valve located in each miniflow line is controlled by a signal from the flow switches located in each pump discharge header. The control valves open when the residual heat removal pump discharge flow is less than approximately 750 gpm and close when the flow exceeds approximately 1400 gpm.

A pressure sensor in each pump discharge header provides a signal for an indicator in the control room. A high pressure alarm is also provided in the control room.

The two pumps are vertical, centrifugal units with mechanical seals on the shafts. All pump surfaces in contact with reactor coolant are austenitic stainless steel or equivalent corrosion resistant material.

The residual heat removal pumps also function as the low head safety injection pumps in the ECCS (see Section 6.3 for further information and for the residual heat removal pump performance curves).

2. Residual Heat Exchangers

Two residual heat exchangers are installed in the system. The heat exchanger design is based on heat load and temperature differences between reactor coolant and component cooling water existing 24 hours after reactor shutdown when the temperature difference between the two systems is small.

The installation of two heat exchangers in separate and independent residual heat removal trains assures that the heat removal capacity of the system is only partially lost if one train becomes inoperative.

The residual heat exchangers are of the shell and U-tube type. Reactor coolant circulates through the tubes, while component cooling water circulates through the shell. The tubes are welded to the tube sheet to prevent leakage of reactor coolant.

The residual heat exchangers also function as part of the ECCS (see Section 6.3).

3. Residual Heat Removal System Valves

Valves that perform a modulating function are equipped with two sets of packings and an intermediate leakoff connection that discharges to the drain header.

Manual and motor-operated valves have backseats to facilitate repacking and to limit stem leakage when the valves are open.

Leakage connections are provided where required by valve size and fluid conditions.

c. System Operation

1. Plant Startup

Generally, while at cold shutdown condition, decay heat from the reactor core is being removed by the RHRS. The number of pumps and heat exchangers in service depends upon the heat load at the time.

At initiation of plant heatup, the RHRS remains aligned to the RCS in order to maintain a low pressure letdown path to the CVCS. This flowpath may provide RCS pressure control while the pressurizer heaters are forming the steam bubble and heating the pressurizer. As the reactor coolant pumps are started, their thermal input heats the reactor coolant inventory. Once the pressurizer steam bubble formation is complete, the RHRS is isolated from the RCS and aligned for operation as part of the ECCS.

2. Power Generation and Hot Standby Operation

During power generation and hot standby operation, the RHRS is not in service but is aligned for operation as part of the ECCS.

3. Plant Cooldown

Plant cooldown is defined as the operation which brings the reactor from no-load temperature and pressure to cold conditions.

The initial phase of plant cooldown is accomplished by transferring heat from the RCS to the steam and power conversion system through the use of the steam generators.

When the reactor coolant temperature and pressure are reduced to less than 350°F and 362 psig, approximately four hours after reactor shutdown, the second phase of cooldown starts with the addition of the RHRS being placed in operation. While RHR is being placed in service, the cooldown can continue via the steam generators. RHR cooling should be in service and controlling temperature prior to RCS temperature being reduced below 225ºF.

Startup of the RHRS includes a warmup period during which reactor coolant flow through the heat exchangers is limited to minimize thermal shock. The rate of heat removal from the reactor coolant is manually controlled by regulating the coolant flow through the residual heat exchangers. By adjusting these control valves downstream of the residual heat exchangers, the mixed mean temperature of the return flows is controlled. Coincident with the manual adjustment of flow through the heat exchangers, each heat exchanger bypass valve is automatically regulated to give the required total flow. During this warmup period, cooldown continues via the steam generators until the RHRS warmup temperature requirements are met or RCS temperature is < 235ºF, at which time full flow can be established through the RHRS.

The controls for the heat exchanger flow control valves and bypass valves are located on the main control board. During normal operation, when the system is aligned for safety injection, the flow control valve must be in full-open position and the bypass valve must be in full-closed position. A bypassed/inoperable status alarm is provided in the control room in case these valves are not aligned for safety injection.

During reduced inventory operations, RHR pump flow is administratively controlled to limit flow such that **vortexing or air entrainment** do not occur.

The reactor cooldown rate is limited by RCS equipment cooling rates based on allowable stress limits, as well as the operating temperature limits of the Component Cooling Water System. As the reactor coolant temperature decreases, the reactor coolant flow through the residual heat exchangers is increased by adjusting the control valve in each heat exchanger's tube side outlet line.

The maximum available cooldown rate would not exceed 200°F/hr following initiation of residual heat cooling (350°F).

Additionally, maintaining such a cooldown rate is difficult if not impossible. A cooldown rate of 50° per hour becomes difficult, if not impossible, to maintain at temperatures below 250°F.

Analysis has shown that, from a stress standpoint, a cooldown rate greater than 200°F/hr is acceptable for such a hypothetical cooldown from 350°F to 250°F even though, as discussed above, a rate of cooldown of 50°F/hr may not be achievable below 250°F.

As cooldown continues, the pressurizer is filled with water and the RCS is operated in the water solid condition.

At this stage, pressure control is accomplished by regulating the charging flow rate and the rate of letdown from the RHRS to the CVCS.

After the reactor coolant pressure is reduced and the temperature is 125°F or lower, the RCS may be opened for refueling or maintenance.

4. Refueling

After the reactor vessel head is lifted and the control rod drive shafts are verified disengaged, the reactor vessel head is removed to the reactor vessel storage stand.

The refueling water is then introduced into the reactor vessel through the RHRS and into the refueling cavity through the open reactor vessel. After the water level reaches the normal refueling level, the refueling water storage tank supply valves are closed, and residual heat removal is resumed.

During refueling, the RHRS is maintained in service with the number of pumps and heat exchangers in operation as required by the heat load.

Following refueling, one of the residual heat removal pumps is used to drain the refueling cavity to the top of the reactor vessel flange by pumping water from the RCS to the refueling water storage tank. The vessel head is then replaced and the normal RHRS flowpath re-established. The remainder of the water is removed from the refueling canal via a drain connection in the bottom of the canal.

d. Control

Each inlet line to the RHRS from the RCS is equipped with a pressure relief valve sized to relieve the combined flow of all the charging pumps at the relief valves set pressure. These relief valves also protect the system from inadvertent overpressurization during plant cooldown or startup. Each valve has a relief flow capacity of 900 gpm at a set pressure of 450 psig. An analysis has been conducted to confirm the capability of the RHRS relief valve to prevent overpressurization in the RHRS. All credible events were examined for their potential to overpressurize the RHRS. These events included normal operating conditions, infrequent transients, and abnormal occurrences.

The most severe credible overpressure transient is the mass input transient resulting from one centrifugal charging pump operating in an unthrottled condition with flow to the Reactor Coolant System while letdown flow is isolated. The capacity of a single RHRS inlet relief valve is sufficient to satisfy RHRS overpressure requirements for this transient during the hot shutdown and cold shutdown operational modes. Procedures and administrative controls ensure that more severe RHRS overpressure transients do not occur during RHRS operations.

Two situations were analyzed to confirm the adequacy of the RHRS relief valve to prevent overpressurization of the RHRS. The first considers the RHRS in the initial phase of RCS cooldown. RCS temperature and pressure are 350°F and 400 psig respectively, and one centrifugal charging pump is in operation. The operator initiates RHRS operation by opening one inlet line and starting the corresponding RHR pump. At this time, a complete loss of plant air occurs, the charging line flow control valve fails open, and the low pressure letdown flow control valve fails closed. The maximum charging pump injection rate is approximately 400 gpm at the relief valve set pressure of 450 psig.

The second transient consists of the RCS in the final stages of cooldown. RCS temperature and pressure are less than 200°F and 450 psig, respectively. The additional conservatism of a second centrifugal charging pump is assumed. The combined flow from both charging pumps is less than 600 gpm.

As each RHRS inlet relief valve has a capacity of 900 gpm at a set pressure of 450 psig, sufficient margin is present to bound liquid and two-phase relief rate uncertainties.

Each discharge line from the RHRS to the RCS is equipped with a pressure relief valve to relieve the maximum possible back-leakage through the valves separating the RHRS from the RCS. Each valve has a relief flow capacity of 20 gpm at a set pressure of 600 psig. These relief valves are located in the ECCS (see Figure 6.3-1).

The fluid discharge by the suction side relief valves is collected in the pressurizer relief tank. The fluid discharged by the discharge side relief valves is collected in the primary drain tank of the equipment and floor drain system.

The design of the RHRS includes two motor-operated gate isolation valves in series on each inlet line between the high pressure RCS and the lower pressure RHRS. They are closed, with power locked out, during normal operation and are only opened for residual heat removal during a plant cooldown after the RCS pressure is reduced to 362 psig or lower and RCS temperature is reduced to approximately 350°F. During a plant startup, the inlet isolation valves are shut after drawing a bubble in the pressurizer and prior to increasing RCS pressure above 400 psig. These isolation valves are provided with a "prevent-open" interlock that is designed to prevent possible exposure of the RHRS to normal RCS operating pressure. The two inlet isolation valves in each residual heat removal subsystem are separately and independently interlocked with pressure signals to prevent their being opened whenever the RCS pressure is greater than approximately that which could result in the RHR system design pressure being exceeded. (This includes the effects of instrument uncertainty and bistable deadband.) Refer to the Station Technical Specifications. Power to the suction line isolation valve motor operators is locked out to prevent spurious opening. An alarm is actuated if a suction isolation valve is open when RCS pressure is above 362 psig as a backup to administrative control to ensure that both valves, rather than just one, are closed at normal RCS operating pressure, thereby ensuring compliance with reactor coolant pressure boundary isolation criteria.

The use of two independently powered motor-operated valves in each of the two inlet lines, along with two independent pressure interlock signals assures a design which meets applicable single failure criteria. Not only more than one single failure but also different failure mechanisms must be postulated to defeat the function of preventing possible exposure of the RHR system to normal RCS operating pressure. These protective interlock and alarm designs, in combination with plant operating procedures, provide diverse means of accomplishing the protective function. For further information on the instrumentation and control features, see Subsection 7.6.2.

Valve position indication is provided on the main control board for both the open and closed positions for the RHR suction line isolation valves and RHR recirculation valves. On loss of suction, the RHR system would go into a recirculation mode, thus protecting the operating RHR pump. Alarms are provided that will actuate, if either suction valve for an operating RHR pump is not fully open and if the flow through the RHR pump is below the minimum expected. Indication of reduced flow and pump amperage is also provided in the control room for the operator to observe during normal system surveillance.

Isolation of the low pressure RHRS from the high pressure RCS is provided on the discharge side by two check valves in series. These check valves are located in the ECCS and their testing is described in Subsection 6.3.4.2.

e. Applicable Codes and Classifications

The entire RHRS is designed as Nuclear Safety Class 2, with the exception of the suction isolation valves which are Safety Class 1. Component codes and classifications are given in Section 3.2.

f. System Reliability Considerations

General Design Criterion 34 requires that a system to remove residual heat be provided. The safety function of this system is to transfer fission product decay heat and other residual heat from the core at a rate sufficient to prevent fuel or pressure boundary design limits from being exceeded. Safety grade systems are provided in the plant design, both NSSS scope and BOP scope, to perform this function. The safety grade systems which perform this function for all plant conditions except a LOCA are: the RCS and steam generators, which operate in conjunction with the Emergency Feedwater System; the steam generator safety and power-operated relief valves; and the RHRS which operates in conjunction with the Component Cooling Water System and the Service Water System. For LOCA conditions, the safety grade system which performs the function of removing residual heat from the reactor core is the ECCS, which operates in conjunction with the Component Cooling Water System and the Service Water System.

The Emergency Feedwater System, along with the steam generator safety and power-operated relief valves, provides a completely separate, independent, and diverse means of performing the safety function of removing residual heat, which is normally performed by the RHR system when RCS temperature is less than 350°F. The Emergency Feedwater System is capable of performing this function for an extended period of time following plant shutdown.

The RHR system is provided with two residual heat removal pumps, and two heat exchangers arranged in two separate, independent flow paths. To assure reliability, each residual heat removal pump is connected to a different vital bus. Each residual heat removal train is isolated from the RCS on the suction side by two motor-operated valves in series with each valve receiving power via a separate motor control center and from a different vital bus. Each suction isolation valve is also interlocked to prevent exposure of the RHR system to the normal operating pressure of the RCS (see Subsection 5.4.7.2d).

RHR system operation for normal conditions and for major failures is accomplished from the control room. Limited action outside the control room is required to prepare the RHRS for operation as discussed in Subsection 5.4.7.2f. The redundancy in the RHR system design provides the system with the capability to maintain its cooling function even with major single failures, such as failure of an RHR pump, valve, or heat exchanger, since the redundant train can be used for continued heat removal.

Although such major system failures are within the system design basis, there are other less significant failures which can prevent opening of the RHR suction isolation valves from the control room. Since these failures are of a minor nature, improbable to occur, and easily corrected outside the control room, with ample time to do so, they have been realistically excluded from the engineering design basis. Such failures are not likely to occur during the limited time period in which they can have any effect (i.e., when opening the suction isolation valves to initiate RHR operation); however, even if they should occur, they have no adverse safety impact and can be readily corrected. In such a situation, the Emergency Feedwater System and steam generator power-operated relief valves can be used to perform the safety function of removing residual heat. In fact, they can be used to continue the plant cooldown below 350°F, until the RHR system is made available.

One failure of this type is a failure in the interlock circuitry which is designed to prevent exposure of the RHR system to the normal operating pressure of the RCS (see Subsection 5.4.7.2d). In the event of such a failure, RHR system operation can be initiated by defeating the failed interlock through corrective action at the solid-state protection system cabinet or by taking local control at the remote safe shutdown control panels.

The other type of failure which can prevent opening the RHR suction isolation valves from the control room is a failure of an electrical power train. Such a failure is extremely unlikely to occur during the few minutes out of a year's operating time during which it can have any consequence.

To ensure operation of at least one 100 percent RHR train in the event of loss of a single power supply, a temporary power connection will be provided to the MCC compartment of the RHR valve whose power supply has failed. This temporary power connection will be a cable from a designated compartment of the unaffected redundant MCC to the compartment of the affected valve. The MCCs involved are MCC E521 and E621. See Figure 8.3-27 for location of MCCs. Terminals are provided in the MCC compartments to facilitate a temporary connection to the line side of the breaker-starter combination of valve. Control of the valve is still from the MCB. The individual MCC compartments are capable of being withdrawn from the bus bar connection and secured in the disconnected position, which precludes a faulted MCC from affecting the operation of the valve having the temporary connection.

The only impact of either of the above types of failures is some delay in initiating residual heat removal operation, while action is taken to open the residual heat removal suction isolation valves. This delay has no adverse safety impact because of the capability of the Emergency Feedwater System and steam generator power-operated relief valves to continue to remove residual heat, and in fact to continue plant cooldown.

A failure mode and effects analysis of the Residual Heat Removal System is provided in Table 5.4-17.

g. Manual Actions

The RHRS is designed to be operable from the control room for normal operation. Manual operations required of the operator are: energizing the valve controls, opening the suction isolation valves, positioning the flow control valves downstream of the RHR heat exchangers, and starting the residual heat removal pumps.

The RHR suction line isolation valves, which are normally de-energized with the circuit breaker locked open, will require an operator to energize these valves just before establishing RHR. There is sufficient time during the plant cooldown to send an operator to the MCC to energize these valves and then operate them from the control room.

Manual actions required outside the control room, under conditions of single failure, are discussed in Subsection 5.4.7.2f.

h. Passive Failures Evaluation

While in the shutdown cooling mode, only the RHR and CC systems are utilized to maintain reactor core cooling. Because the RHR system operates as a "high energy" system for less than 2 percent of the time which it operates, it is considered a "moderate energy" system in accordance with BTP ASB 3-1, Appendix A - Definitions.

1. The maximum discharge rate due to a moderate energy line break of the above two systems are as follows:

   (a) For RHR lines RC-13-2-601-12" and RC-58-2-601-12" (see note below), the maximum discharge rate is 121.2 cfm.

   (b) For CC lines C-775-5-152-20" and CC-829-2-152-20", the maximum discharge rate is 85.4 cfm.

   NOTE: Cracks in the 14" and 16" sections of the RHR suction lines are not postulated because maximum stresses in these lines are less than those specified in BTP MEB 3-1, Subsection B.2.c.(1).

2. In determining the time available for recovery, a conservative estimate was made as to how much RCS inventory would have to be lost before the RHR system would loose its ability to perform core cooling. Although the RHR system will continue to perform its function with the RCS water level as low as the centerline of the vessel loop nozzles, only the inventory associated with 1) the pressurizer (at 25 percent level), (2) the surge line, (3) the primary side of the steam generators and (4) reactor vessel above the loop nozzles was considered. This inventory conservatively amounts to more than 5840 cu. ft.

   Assuming that a loss of 5840 cu. ft would begin to degrade the RHR system's ability to maintain core cooling, and neglecting any mass input associated with the charging system or operator action associated with manually initiating safety injection, a leak rate of 121.2 cfm would take over 48 minutes to reduce the RCS inventory by 5840 cu. ft.

   The effect on core cooling during this time would be a reduction to the RCS cooldown rate.

   A leak in the component cooling lines supplying the RHR heat exchangers of the magnitude presented in 1(b) above, would empty the CC surge tank in about 1 minute 43 seconds. Although air introduction into the CC system and cavitation of the CC pump would commence at this point, because of the large volume of water remaining in the CC return lines and still supplying the CC pump suction, a complete loss of CC flow to the RHR heat exchanger is not expected at this time.

   The effect upon core cooling for this postulated event would be a reduction in the cooldown rate as the plant continues its cooldown on the remaining unaffected RHR/CC systems.

3. Assuming the leak rate postulated in the response to 1(a) above, a low pressurizer level alarm would be generated in about 41 seconds. A second lo-lo pressurizer level alarm would be generated less than 25 seconds after the first alarm. Additionally, a high sump level alarm in the affected vault would be actuated approximately 1 minute from the commencement of the leak.

For the postulated leak in the component cooling lines identified in 1(b) above, a component cooling surge tank low level alarm would activate in less than 1 minute. Within an additional 25 seconds, a lo-lo surge tank level alarm would also annunciate. Within 1½ minutes from the onset of the leak, a high sump level alarm in the affected vault would also be actuated.

For either of the above postulated leaks, the operator response would be to isolate the affected system and continue the RCS cooldown using the redundant, nonaffected RHR and Component Cooling System.

i. Functional Requirements

The safe shutdown design basis for Seabrook is hot standby. The cold shutdown capability of the plant has been evaluated in order to demonstrate how the plant can be brought to a cold shutdown condition using only safety-grade equipment following a safe shutdown earthquake, loss of offsite power and the most limiting single failure. Under such conditions, the plant is capable of achieving RHR system operating conditions (approximately 350°F and 400 psig) in approximately nine to ten hours, which includes remaining in hot standby for up to four hours.

The selected method of achieving the cold shutdown condition for Seabrook is natural circulation without RCS letdown. Core decay heat and cooldown energy is removed by a combination of steam generator atmospheric venting with secondary coolant makeup from the condensate storage tank via the Emergency Feedwater System. Reactivity control is achieved by making up to the RCS from borated water sources, taking advantage of the reactor coolant's specific volume decrease as the RCS is cooled to ≤ 350°F. At this point, the RHR system is placed in service to complete the cooldown to cold shutdown conditions subsequent to RCS depressurization to approximately 400 psig.

This scenario is detailed more fully as follows:

1. System Energy Removal

To maintain the RCS in hot standby (constant average temperature), core decay heat energy must be removed at a rate equivalent to fission product energy production. To cool down the RCS, the energy contained in the reactor coolant and all system components must also be removed.

The combination of decay heat energy and mass energy of the coolant and system components is initially removed by heat transfer to the steam generators. This heat transfer is made possible by natural convection with the reactor core as the heat source and the steam generators as the heat sink. Since the steam generators are located at a higher elevation than the reactor core, a natural thermosiphon is created. The resulting natural flow created for Seabrook is in the order of three to four percent of normal forced flow (reactor coolant pumps operating) and is more than adequate to transfer decay energy and mass energy to the steam generators. Simple analysis indicates that RCS loop ΔT values are in the order of 15 - 30°F which are typical of power operation with forced convection. These values of natural circulation flow and loop ΔTs correspond well with actual natural circulation tests conducted at similar PWRs.

To ensure this natural circulation flow in the RCS, the steam generators must be maintained as a heat sink. To achieve this condition, the safety-grade steam generator power-operated atmospheric relief valves are used to vent vaporized secondary coolant. The rate of venting is adjusted by the operator to set the RCS cooldown rate to a value ≤ 50°F/hour. Secondary coolant makeup is provided via the Emergency Feedwater System from the seismic Category I condensate storage tank. The minimum volume which is available for this scenario is the 194,000 gallons which is dedicated for EFW use. The heat removal capability of this secondary coolant volume is determined by heating this coolant to saturation in the steam generators and removing the latent heat of vaporization by venting the steam generator. The total worth of the 194,000 gallons in the condensate storage tank in terms of RCS heat removal is, on a Btu basis, sufficient to accommodate a four-hour period at hot standby plus a cooldown to ≤ 350°F.

Since it is recognized that continued mass addition to the RCS is desirable for reactor coolant pump seal injection and that the letdown system would be isolated, the RCS cooldown would normally commence without a four hour period at hot standby. This means that the portion of the condensate storage tank volume allotted by design for a four-hour period at hot standby is not actually required for this scenario. This adds additional conservatism to the secondary coolant volume of 194,000 gallons provided for this cooldown.

Seabrook is classified at a T_{cold} plant by the NSSS vendor. This means that with normal forced convection (reactor coolant pumps running) the temperature of the coolant under the vessel head remains close to T_{cold} because a small portion of the vessel inlet flow is diverted into this region. Under natural circulation conditions, the coolant under the vessel head does not remain at T_{cold}. Vendor data shows that with a 50°F/hour RCS cooldown rate, the cooldown rate of the coolant under the head would be approximately 34°F/hour without the aid of the nonsafety grade control rod drive mechanism fans. For a 50°F/hour cooldown rate, the RCS could be depressurized to 400 psig for RHR operation in about five hours. Although bulk coolant temperature under the head would be at a higher temperature, no steam voiding would occur based on a 34°F/hour cooldown rate.

When the steam generators are being used as the reactor heat sink during the cooldown to 350°F, a single failure of any active component does not render all steam generators ineffective as a heat sink. Either of the two emergency feedwater pumps have sufficient capacity to provide for all steam generator makeup requirements. The steam generator power-operated relief valves have manual loading stations should remote operation be lost. The Emergency Feedwater System and the steam generator power-operated relief valves are seismic Category I subsystems.

The second stage of the cooldown is from 350°F to cold shutdown. During this stage, the RHR system is brought into operation. Circulation of the reactor coolant is provided by the RHR pumps, and the heat exchangers in the RHR system act as the means of heat removal from the RCS. In the RHR heat exchangers, the residual heat is transferred to the Component Cooling Water System which ultimately transfers the heat to the Service Water System.

The RHR system is a fully redundant system. Each RHR subsystem includes one RHR pump and one RHR heat exchanger. Each RHR pump is powered from different emergency power trains and each RHR heat exchanger is cooled by a different component cooling water system loop. The Component Cooling Water and Service Water Systems are both designed to seismic Category I.

If any component in one of the RHR subsystems were rendered inoperable as the result of a single failure, cooldown of the plant could still be continued.

At Seabrook, a single RHR cooling loop can be cut in under full flow conditions with all air-operated temperature control valves in their failed (maximum cooling) positions. The resulting maximum RCS cooldown rate would not exceed 50°F/hour; therefore, special control functions are not necessary.

2. Reactivity and Inventory Control

Core reactivity is controlled during the cooldown by adding borated water to the RCS in conjunction with the cooldown. As the cooldown progresses, the specific volume of the reactor coolant decreases. The resulting coolant contraction allows the addition of borated water to the RCS to maintain a constant pressurizer level during cooldown.

Boration is accomplished using portions of the Chemical and Volume Control Systems (CVCS). At the beginning of the cooldown, the operators align one of the two boric acid tanks to the suction side of the centrifugal charging pumps. One of the two centrifugal charging pumps would inject borated water to the RCS through the reactor coolant pump seal injection flow path and/or the boron injection portion of the safety injection system. The capacity of one boric acid tank is sufficient to make up for reactor coolant contraction down to and beyond the point of cutting in RHR. The contained volume required by Technical Requirements for both tanks may be needed to achieve the required boron concentration. The concentration of boron in the boric acid tanks is maintained between 7000-7700 ppm H_3BO_3. At the minimum concentration of 7000 ppm, gross shutdown margin in the order of 2-5 percent $\Delta K/K$ is maintained during the cooldown considering most limiting conditions (end-of-life, most reactive rod stuck out).

Makeup in excess of that required for boration can be provided from the refueling water storage tank (RWST) using the centrifugal charging pumps and the same injection flow paths as described for boration. Two independent motor-operated valves, each powered from different emergency diesels, transfer the suction of the charging pumps to the RWST.

The two boric acid tanks, two centrifugal charging pumps and the associated piping are of seismic Category I design and are independently train associated.

Under natural circulation conditions, the RCS loop transport time is approximately five minutes and the coolant Reynold's number is in the order of 25,000. Since either boration path distributes RCS makeup to all four loops, adequate mixing and distribution of boron can be assumed.

Provisions are made to obtain RCS coolant samples to determine boron concentration during the cooldown. This can be done considering single failure and without the need for a containment entry. The onshift chemistry technician would aid the operators in following boron concentration.

3. RCS Depressurization

For this scenario, RCS depressurization is accomplished by opening one of the two safety-grade pressurizer power-operated relief valves. The discharge is directed to the pressurizer relief tank where it is condensed and cooled.

The depressurization process is integrated with the cooldown process to maintain the RCS within normal pressure-temperature limits. Just before cutting in an RHR cooling loop at 350°F, the RCS is depressurized to ≤ 400 psig.

Analysis shows that the pressurizer relief tank can accommodate the RCS depressurization to the RHR cut in pressure of 400 psig without opening the rupture discs. Operation of the Pressurizer Relief Tank Cooling System is not required.

Single failure of one pressurizer power-operated relief valve does not prevent RCS depressurization. Isolation valves are provided for each power-operated relief valve should it fail to properly reseat after depressurization.

4. Instrumentation

Class 1E instrumentation is available in the control room to monitor the key functions associated with achieving cold shutdown and includes the following:

(a) RCS wide-range temperature, T_H and T_C

(b) RCS wide range pressure

(c) Pressurizer water level

(d) Steam generator water level (per steam generator, narrow and wide range)

(e) Steam line pressure (per steam line)

(f) Condensate storage tank level

(g) Boric acid tank level (per boric acid tank)

(h) Emergency feedwater flow.

This instrumentation is sufficient to monitor the key functions associated with cold shutdown and to maintain the RCS within the design pressure, temperature, and inventory relationships.

5. Summary of Manual Actions

This scenario can be easily accomplished with the normal onshift complement and on-call personnel.

Depending on the nature of any single failure that may or may not be present, the following manual actions could be required outside the main control room:

(a) Manual valve alignment to feed boric acid tank contents to the suction of the operating centrifugal charging pump prior to cooldown. This would only be necessary if the normal feed path was inoperable or if direct gravity feed from the boric acid tank to the centrifugal charging pump was desired. This task is simple and would take less than ten minutes. The backup borated water source (RWST) can be lined up from the control room until this task is complete.

(b) Prior to cutting in an RHR cooling loop when RCS temperature and pressure are reduced to ≤ 350°F and 400 psig, the operator must manually close the power supply breakers for the RHR suction valves (RC-V22, -23, -87, and -88). As stated in the response to BTP RSB 5-1, this task would take 2-4 minutes to complete, although there is no real need to do this quickly. The RHR suction valve power supply breakers are locked open during normal plant operation to reduce concerns relating to "interfacing LOCAs" during a postulated fire event.

Should either Train A or Train B power sources be unavailable, the associated RHR suction valve in each RHR system would be inoperable. In this case, provisions are made to power the affected valve from the opposite train power sources. Here again, the time to complete this task does not seriously hamper transition to RHR system cooling. The on-call maintenance electrician would aid operators in completing this task.

5.4.7.3 Performance Evaluation

The performance of the RHRS in reducing reactor coolant temperature is evaluated through the use of heat balance calculations on the RCS, and the Component Cooling Water System at stepwise intervals following the initiation of residual heat removal operation. Heat removal through the residual heat removal and component cooling water heat exchangers is calculated at each interval by use of standard water-to-water heat exchanger performance correlations. The resultant fluid temperatures for the Residual Heat Removal and Component Cooling Water Systems are calculated and used as input to the next interval's heat balance calculation.

Assumptions used in the series of heat balance calculations describing a normal plant RHR cooldown are as follows:

a. Residual heat removal operation is initiated four (4) hours after reactor shutdown.

b. Residual heat removal operation begins at a reactor coolant temperature of 350°F.

c. Thermal equilibrium is maintained throughout the RCS during the cooldown.

d. The component cooling water flow through a RHR heat exchanger is 3000 gpm instead of the design value of 5000 gpm.

e. Component cooling water temperature during cooldown is limited to a maximum of 102°F.

f. Cooldown rates of 50°F per hour are not exceeded.

Cooldown curves calculated using this method are provided for the case of all RHR components operable (Figure 5.4-5) and for the case of a single train RHR cooldown (Figure 5.4-6).

5.4.7.4 Preoperational Testing

The RHR system is tested prior to initial core loading for integrity, performance and operability. The preoperational tests of the system are described in Chapter 14.

5.4.8 Reactor Water Cleanup System (BWR)

Not applicable to Seabrook.

5.4.9 Main Steam Line and Feedwater Piping

The Main Steam and Feedwater Systems are secondary cooling systems, and are isolated from the Reactor Coolant System by the steam generators. The main steam piping is described in Section 10.3; the feedwater piping is described in Subsection 10.4.7. Piping material specifications and test methods for both systems are described in Subsection 10.3.6.

5.4.10 Pressurizer

5.4.10.1 Design Basis

The general configuration of the pressurizer is shown in Figure 5.4-13. The design data of the pressurizer are given in Table 5.4-9. Codes and material requirements are provided in Section 5.2.

The pressurizer provides a point in the RCS where liquid and vapor can be maintained in equilibrium under saturated conditions to maintain pressure during steady state operations and limits pressure changes during transients.

a. Pressurizer Surge Line

The surge line is sized to minimize the pressure drop between the RCS and the pressurizer/safety valves with maximum allowable discharge flow from the safety valves, as necessary.

The surge line and the thermal sleeves are designed to withstand the thermal stresses which occur during operation.

The pressurizer surge line nozzle diameter is given in Table 5.4-9 and the pressurizer surge line dimensions are shown in Figure 5.1-3, sh.4.

b. Pressurizer

The volume of the pressurizer is equal to, or greater than, the minimum volume of steam, water, or total of the two which satisfies all of the following requirements:

1. The combined saturated water volume and steam expansion volume is sufficient to provide the desired pressure response to system volume changes.

2. The water volume is sufficient to prevent the heaters from being uncovered during a step load increase of 10 percent.

3. The steam volume is large enough to accommodate the surge resulting from 50 percent reduction of full load with automatic reactor control and 40 percent steam dump without the water level reaching the high level reactor trip point.

4. The steam volume is large enough to prevent water relief through the safety valves following a loss of load with the high water level initiating a reactor trip, without reactor control or steam dump.

5. The pressurizer will not empty following reactor trip and turbine trip.

6. The emergency core cooling signal is not activated during reactor trip and turbine trip.

5.4.10.2 Design Description

a. Pressurizer Surge Line

The pressurizer surge line connects the pressurizer to one reactor hot leg enabling continuous coolant volume pressure adjustments between the RCS and the pressurizer.

b. Pressurizer

The pressurizer is a vertical, cylindrical vessel with hemispherical top and bottom heads constructed of low alloy steel, with austenitic stainless steel cladding on all internal surfaces exposed to the reactor coolant. A stainless steel liner or tube may be used in lieu of cladding in some nozzles.

The surge line nozzle connects the bottom of the pressurizer to an RCS hot leg. The electric heaters are located in the lower portion of the vessel, where they maintain the steam and water contents at equilibrium conditions. The heaters are removable for maintenance or replacement.

A thermal sleeve is provided to minimize thermal stresses in the surge line nozzle. A retaining screen is located above the nozzle to prevent any foreign matter from entering the RCS. Baffles in the lower section of the pressurizer prevent an insurge of cold water from flowing directly to the steam/water interface and assist in mixing.

Spray line nozzles, relief and safety valve connections are located in the top head of the vessel. Spray flow is modulated by automatically controlled air-operated valves. The spray valves also can be operated manually by a switch in the control room.

A small continuous spray flow is provided through a manual bypass valve around the power-operated spray valves to assure that the pressurizer liquid is homogeneous with the coolant and to prevent excessive cooling of the spray piping.

During an outsurge from the pressurizer, flashing of water to steam and generating of steam by automatic actuation of the heaters keep the pressure above the minimum allowable limit. During an insurge from the RCS, the spray system, which is fed from two cold legs, condenses steam in the vessel to prevent the pressurizer pressure from reaching the setpoint of the power-operated relief valves for normal design transients.

Heaters are energized on high water level during insurge to heat the subcooled surge water that enters the pressurizer from the reactor coolant loop.

Material specifications are provided in Table 5.2-2 for the pressurizer, pressurizer relief tank, and the surge line. Design transients for the components of the RCS are discussed in Subsection 3.9(N).1. Additional details on the pressurizer design cycle analysis are given in Subsection 5.4.10.3e.

1. Pressurizer Instrumentation

   Refer to Chapter 7 for details of the instrumentation associated with pressurizer pressure, level, and temperature.

2. Spray Line Temperatures

   Temperatures in the spray lines from the cold legs of two loops are measured and indicated. Alarms from these signals are actuated to warn the operator of low spray water temperature or indicate insufficient flow in the spray lines.

3. Safety and Relief Valve Discharge Temperatures

   Temperatures in the pressurizer safety valve discharge lines and relief valve manifold are measured and indicated. An increase in a discharge line temperature is an indication of leakage or relief through the associated valve.

5.4.10.3 Design Evaluation

a. System Pressure

Whenever a steam bubble is present within the pressurizer, the RCS pressure will be maintained by the pressurizer. Analyses indicate that proper control of pressure is maintained for the normal operating conditions.

A safety limit has been set to ensure that the RCS pressure does not exceed the maximum transient value allowed under the ASME Code, Section III, and thereby assure continued integrity of the RCS components. Evaluation of plant conditions of operations, which follow, indicate that this safety limit is not reached.

During startup and shutdown, the rate of temperature change in the RCS is controlled by the operator. Heatup rate is controlled by pump energy and by the pressurizer electrical heating capacity. This heatup rate takes into account the continuous spray flow provided to the pressurizer. When the reactor core is in cold shutdown (except during initial pressurizer fill), the heaters are de-energized.

When the pressurizer is filled with water, e.g., during initial system heatup, and near the end of the second phase of plant cooldown, RCS pressure is maintained by the letdown flow rate via the RHRS.

b. Pressurizer Performance

The normal operating water volume at full load conditions is a percentage of the internal vessel volume. Under part load conditions, the water volume in the vessel is reduced for proportional reductions in plant load to accommodate the accompanying thermal contraction of the reactor coolant. The various plant operating transients are analyzed and the design pressure is not exceeded with the pressurizer design parameters as given in Table 5.4-9.

A comparison of the design basis operating conditions determined that the conditions the pressurizer was originally qualified for envelop the operation of Seabrook Unit 1 at a power level of 3678 MWt.

c. Pressure Setpoints

The RCS design and operating pressure together with the safety, power-operated relief and pressurizer spray valves setpoints, and the protection system pressure setpoints are listed in Table 5.4-10. The design pressure allows for operating transient pressure changes. The selected design margin considers core thermal lag, coolant transport times and pressure drops, instrumentation and control response characteristics, and system relief valve characteristics.

d. Pressurizer Spray

Two separate, automatically controlled spray valves with remote manual overrides are used to initiate pressurizer spray. In parallel with each spray valve is a manual throttle valve which permits a small continuous flow through both spray lines to reduce thermal stresses and thermal shock when the spray valves open, and to help maintain uniform water chemistry and temperature in the pressurizer. Temperature sensors with low alarms are provided in each spray line to alert the operator to insufficient bypass flow. The layout of the common spray line piping routed to the pressurizer forms a water seal which prevents the steam buildup back to the control valves. The spray rate is selected to prevent the pressurizer pressure from reaching the operating setpoint of the power-operated relief valves during a step reduction in power level of 15 percent of full load.

The pressurizer spray lines and valves are large enough to provide adequate spray using as the driving force the differential pressure between the surge line connection in the hot leg and the spray line connection in the cold leg. The spray line inlet connections extend into the cold leg piping in the form of a scoop to utilize the velocity head of the reactor coolant loop flow to add to the spray driving force. The spray valves and spray line connections are arranged so that the spray will operate when one reactor coolant pump is not operating. The line may also be used to assist in equalizing the boron concentration between the reactor coolant loops and the pressurizer.

A flow path from the Chemical/Volume Control System (CVCS) to the pressurizer spray line is also provided. This additional facility provides auxiliary spray to the vapor space of the pressurizer during cooldown when the reactor coolant pumps are not operating.

The thermal sleeves on the pressurizer spray connection and the spray piping are designed to withstand the thermal stresses resulting from the introduction of cold spray water.

e. Pressurizer Design Analysis

The occurrences for pressurizer design cycle analysis are defined as follows:

1. The temperature in the pressurizer vessel is always, for design purposes, assumed equal to the saturation temperature for the existing RCS pressure, except in the pressurizer steam space subsequent to a pressure increase. In this case the temperature of the steam space will exceed the saturation temperature since an isentropic compression of the steam is assumed.

   The only exception of the above occurs when the pressurizer is filled water solid, such as, during plant startup and cooldown.

2. The temperature shock on the spray nozzle is assumed to equal the temperature of the nozzle minus the minimum spray line temperature and the temperature shock on the surge nozzle is assumed to equal the pressurizer water space temperature minus the hot leg temperature.

3. Pressurizer spray is assumed to be initiated instantaneously to its design value as soon as the RCS pressure increases 40 psi above the nominal operating pressure. Spray is assumed to be terminated as soon as the RCS pressure falls below the operating pressure plus 40 psi unless otherwise noted.

4. Unless otherwise noted, pressurizer spray is assumed to be initiated once per occurrence of each transient condition. The pressurizer surge nozzle is also assumed to be subject to one temperature transient per transient condition, unless otherwise noted.

5. Each upset condition transient results in a reactor trip. At the end of each transient, except the faulted conditions, the RCS is assumed to return to no-load conditions consistent with the pressure and temperature changes.

6. For design purposes, the following assumptions are made with respect to Condition III (Emergency Conditions) and Condition IV (Faulted Conditions) transients.

   (a) The plant eventually reaches cold shutdown conditions after all Condition IV transients and after the following Condition III transients: small loss-of-coolant accident and small steam line break.

(b) For the other Condition III transients, the plant goes to hot shutdown until the condition of the plant is determined. It is then brought either to no-load conditions or to cold shutdown conditions, with pressure and temperature changes controlled within allowable limits.

7. Temperature changes occurring as a result of pressurizer spray are assumed to be instantaneous. Temperature changes occurring on the surge nozzle are also assumed to be instantaneous.

8. Whenever spray is initiated in the pressurizer, the pressurizer water level is assumed to be at the no-load level.

5.4.10.4 Tests and Inspections

The pressurizer is designed and constructed in accordance with the ASME Code, Section III.

To implement the requirements of the ASME Code, Section XI, the following welds are designed and constructed to present a smooth transition surface between the parent metal and the weld metal. The path is ground smooth for ultrasonic inspection.

a. Support skirt to the pressurizer lower head

b. Surge nozzle to the lower head

c. Nozzle to safe end attachment welds

d. All girth and longitudinal full penetration welds

e. Manway attachment welds.

The liner within the safe end nozzle region extends beyond the weld region to maintain a uniform geometry for ultrasonic inspection.

Peripheral support rings are furnished for the removable insulation modules.

The pressurizer quality assurance program is given in Table 5.4-11.

5.4.11 Pressurizer Relief Discharge System

The pressurizer relief discharge system collects, cools and directs for processing the steam and water discharged from the various safety and relief valves in the Containment. The system consists of the pressurizer relief tank, pressurizer relief tank pump, pressurizer relief tank heat exchanger, the safety and relief valve discharge piping, the relief tank internal spray header and associated piping, and the tank nitrogen supply, the vent to Containment and the drain to the equipment and floor drain system.

5.4.11.1 Design Bases

Codes and materials of the pressurizer relief tank and associated piping are given in Section 5.2. Design data for the tank are given in Table 5.4-12.

The system design is based on the requirement to condense and cool a discharge of pressurizer steam equal to 110 percent of the volume above the full power pressurizer water level setpoint. The system is not designed to accept a continuous discharge from the pressurizer. The volume of water in the relief tank is capable of absorbing the heat from the assumed discharge, with an initial temperature of 120°F. If the temperature in the tank rises during plant operation, the tank is cooled by spraying in cool water and draining out the warm mixture to the equipment and floor drain system. Alternatively, the tank may be cooled by circulating its contents through the pressurizer relief tank heat exchanger. The volume and pressure of nitrogen gas in the tank are selected to limit the maximum pressure following a design discharge to less than the minimum rupture disc relief pressure with conservative margin.

The vessel saddle supports and anchor bolt arrangement are designed to withstand the loadings resulting from a combination of nozzle loadings acting simultaneously with the vessel seismic and static loadings.

5.4.11.2 System Description

The piping and instrumentation diagram for the Pressurizer Relief Discharge System is given in Figure 5.1-4.

The steam and water discharged from the various safety and relief valves inside the Containment is routed to the pressurizer relief tank, if the discharged fluid is of reactor grade quality. Table 5.4-13 provides an itemized list of valves discharging to the tank, together with references to the corresponding piping and instrumentation diagrams.

The tank normally contains water and a predominantly nitrogen atmosphere. In order to obtain effective condensing and cooling of the discharged steam, the tank is installed horizontally, with the steam discharged through a sparger pipe located near the tank bottom and under the water level. The sparger holes are designed to insure a resultant steam velocity close to sonic.

The tank is also equipped with an internal spray and a drain which are used to cool the water following a discharge. Cooling is effected by cold water drawn from the Reactor Makeup Water System, or by circulation of the contents of the tank through the pressurizer relief tank heat exchanger and back into the spray header.

The nitrogen gas blanket is used to control the atmosphere in the tank, and to allow room for the expansion of the original water plus the condensed steam discharge. Provision is made to permit the gas in the tank to be periodically analyzed to monitor the concentration of hydrogen and/or oxygen.

The contents of the vessel can be drained to the primary drain tank in the equipment and floor drain system via the reactor coolant drain tank pumps in the equipment and floor drain system. When the level in the tank is above the high level setpoint, and the liquid temperature is less than 120°F, the three-way valve is changed to the discharge position, and the pressurizer relief tank pump transfers the liquid to the suction side of the reactor coolant drain tank pumps, which then transfers the liquid to the primary drain tank.

The general configuration of the pressurizer relief tank is shown in Figure 5.4-14. The tank is a horizontal, cylindrical vessel with elliptical dished heads. The vessel is constructed of austenitic stainless steel and is overpressure protected in accordance with ASME Code, Section VIII, Division 1, by means of two safety heads with stainless steel rupture discs.

A flanged nozzle is provided on the tank for the pressurizer discharge line connection to the sparger pipe. The tank is also equipped with an internal spray connected to a cold water inlet and with a bottom drain, which are used to cool the tank following a discharge.

5.4.11.3 Safety Evaluation

The Pressurizer Relief Discharge System does not constitute part of the reactor coolant pressure boundary per 10 CFR 50, Section 50.2, since all of its components are downstream of the RCS safety and relief valves. Thus, General Design Criteria 14 and 15 are not applicable. Furthermore, complete failure of the auxiliary systems serving the pressurizer relief tank will not impair the capability for safe plant shutdown.

The design of the system piping layout and piping restraints is consistent with Regulatory Guide 1.46, with the safety and relief valve discharge piping restrained so that integrity and operability of the valves are maintained in the event of a rupture. Regulatory Guide 1.67 is not applicable since the system is not an open discharge system.

The Pressurizer Relief Discharge System is capable of handling the design discharge of steam without exceeding the design pressure and temperature of the pressurizer relief tank.

The volume of water in the pressurizer relief tank is capable of absorbing the heat from the assumed discharge. If a discharge exceeding the design basis should occur, the rupture discs on the tank would pass the discharge through the tank to the Containment.

The rupture discs on the relief tank have a relief capacity equal to or greater than the combined capacity of the pressurizer safety valves. The minimum rupture disc relief pressure is significantly above the calculated pressure resulting from the design basis safety valve discharge described in Subsection 5.4.11.1. The tank and rupture disc holders are also designed for full vacuum to prevent tank collapse if the contents cool following a discharge without nitrogen being added.

The discharge piping from the safety and relief valves to the relief tank is sufficiently large to prevent backpressure at the safety valves from exceeding 20 percent of the setpoint pressure at full flow.

5.4.11.4 Instrumentation Requirements

The pressurizer relief tank pressure transmitter provides an indication of tank pressure at the main control board. An alarm is provided to indicate high tank pressure.

The pressurizer relief tank level transmitter supplies a signal for an indicator with high and low level alarms at the main control board.

The temperature of the water in the pressurizer relief tank is indicated at the main control board, and an alarm actuated by high temperature informs the operator that cooling of the tank contents is required. A temperature in excess of a predetermined value automatically starts the pressurizer relief tank pump. This pump may also be operated manually from the control room.

5.4.11.5 Inspection and Testing Requirements

The Pressurizer Relief Discharge System is tested prior to initial core loading for integrity, performance and operability. The preoperational tests of the system are described in Chapter 14.

5.4.12 Valves

5.4.12.1 Design Bases

As noted in Section 5.2, all valves in the Reactor Coolant System (RCS), out to and including the second valve normally closed or capable of automatic or remote closure and larger than ¾ inch, are ANS Safety Class 1, and ASME Boiler and Pressure Vessel Code, Section III, Code Class 1, valves. All ¾ inch or smaller valves in lines connected to the RCS are Class 2, since the interface with the Class 1 piping is provided with suitable orificing for such valves. Design data for the RCS valves are given in Table 5.4-14.

For a check valve to qualify as part of the RCS, it must be located inside the containment system. When the second of two normally open check valves is considered part of the RCS (as defined in Section 5.1), means are provided to periodically assess back-flow leakage of the first valve when closed.

To ensure that the valves will meet the design objectives, the materials of construction minimize corrosion/erosion and ensure compatibility with the environment. Leakage is minimized to the extent practicable by design.

5.4.12.2 Design Description

Initially, all manually and motor-operated valves of the RCS which are 3 inches and larger were provided with double-packed stuffing boxes and intermediate lantern ring leakoff connections. Exceptions to this criterion are gate valves that have been determined to be susceptible to pressure locking, which have been modified to utilize the valve stem leakoff connection as a vent path for the bonnet cavity. Packing configurations have evolved so that the preferred packing configuration is a single packing set. The industry has moved away from double packed stuffing boxes. These changes in packing configuration have been approved for use at Seabrook Station. Accordingly, either packing design configuration is acceptable for use at Seabrook. These valves use only a single packing set. Leakage to the atmosphere is essentially zero for these valves. Gate valves at the engineered safety features interface are wedge design and are essentially straight through. The wedges are flex-wedge or solid. All gate valves have backseats. Globe valves are "T" and "Y" style. Check valves are swing type for sizes 3 inches and larger. All check valves which contain radioactive fluid are stainless steel and do not have body penetrations other than the inlet, outlet and bonnet. The check hinge is serviced through the bonnet. All operating parts are contained within the body. The disc has limited rotation to provide a change of seating surface and alignment after each valve opening.

5.4.12.3 Design Evaluation

The design requirements for Class 1 valves, as discussed in Subsection 3.9.1, limit stresses to levels which ensure structural integrity of the valves. In addition, the testing programs described in Section 3.9(N) demonstrate the ability of the valves to operate as required during anticipated and postulated plant conditions.

Reactor coolant chemistry parameters are specified in the design specifications to assure the compatibility of valve construction materials with the reactor coolant. To ensure that the reactor coolant continues to meet these parameters, the chemical composition of the coolant will be analyzed periodically.

The above requirements and procedures, coupled with the previously described design features for minimizing leakage, ensure that the valves will perform their intended functions as required during plant operation.

5.4.12.4 Tests and Inspections

The tests and inspections discussed in Section 3.9(N) are performed to ensure the operability of active valves.

There are no full-penetration welds within the valve body walls. Valves are accessible for disassembly and internal visual inspection to the extent practical. Plant layout configurations determine the degree of inspectability. The valve nondestructive examination program is given in Table 5.4-15. In-service inspection is discussed in Subsection 5.2.4.

5.4.13 Safety and Relief Valves

5.4.13.1 Design Bases

The combined capacity of the pressurizer safety valves is designed to accommodate the maximum surge resulting from a complete loss of load. This objective is met without reactor trip or any operator action by the opening of the steam generator safety valves when steam pressure reaches the steam side safety setting.

The pressurizer power-operated relief valves are designed to fail to the closed position on loss of electrical power. Subsection 5.2.2.11 discusses pressurizer power-operated relief valve operation during RCS control during low temperature operations.

5.4.13.2 Design Description

The pressurizer safety valves are of the pop type. The valves are spring loaded, open by direct fluid pressure action, and have backpressure compensation features.

The pressurizer power-operated relief valves are solenoid actuated valves which respond to a signal from a pressure sensing system or to manual control. Remotely-operated stop valves are provided to isolate the power-operated relief valves if excessive leakage develops.

Temperatures in the pressurizer safety valves discharge lines and relief valve discharge manifold are measured and indicated, with high temperature annunciated in the control room. An increase in a discharge line temperature is an indication of leakage or relief through the associated valve.

Design parameters for the pressurizer spray control, safety, and power relief valves are given in Table 5.4-16.

5.4.13.3 Design Evaluation

The pressurizer safety valves prevent RCS pressure from exceeding 110 percent of system design pressure, in compliance with the ASME Boiler and Pressure Vessel Code, Section III.

The pressurizer power-operated relief valves limit undesirable opening of the spring-loaded safety valves.

5.4.13.4 Tests and Inspections

All safety and relief valves are subjected to hydrostatic tests, seat leakage tests, operational tests, and inspections, as required. For safety valves that are required to function during a faulted condition, additional tests are performed. These tests are described in Section 3.9(N).

There are no full penetration welds within the valve body walls. Valves are accessible for disassembly and internal visual inspection.

5.4.14 Component Supports

5.4.14.1 Design Bases

Component supports allow virtually unrestrained lateral thermal movement of the RCS loop during plant operation and provide restraint to the loops and components during accident and seismic conditions. The loading combinations and design stress limits are discussed in Subsection 3.9(N).1.4. (Reference 4 provides the original criteria for postulating breaks in the RC loop. The basis for eliminating eight of these postulated large pipe breaks in the RC loop is provided in References 5 and 6. However, the design of the RCS component supports remains unchanged.) Support design is in accordance with the ASME Code, Section III, Subsection NF, except as noted in Subsection 3.8.3. The design maintains the integrity of the RCS boundary for normal, seismic, and accident conditions and satisfies the requirements of the piping code. Results of piping and supports stress evaluation are presented in Section 3.9(N).

5.4.14.2 Description

The support structures are welded structural steel sections. Linear type structures (tension and compression struts, columns, and beams) are used in all cases, except for the reactor vessel supports, which are plate type structures. Attachments to the supported equipment are nonintegral type that are bolted to or bear against the components. The supports-to-concrete attachments are either anchor bolts or embedded fabricated assemblies.

The supports permit virtually unrestrained thermal growth of the supported systems but restrain vertical, lateral, and rotational movement resulting from seismic and pipe break loadings. This is accomplished using spherical bushings in the columns for vertical support and girders, bumper pedestals, hydraulic snubbers, and tie-rods for lateral support.

Because of manufacturing and construction tolerances, ample adjustment in the support structures is provided to ensure proper erection alignment and fit-up. This is accomplished by shimming or grouting at the supports-to-concrete interface and by shimming at the supports-to-equipment interface.

The supports for the various components are described in the following paragraphs.

a. Reactor Pressure Vessel

The reactor pressure vessel is supported laterally and vertically by two distinct support systems as shown in Figure 5.4-15.

1. Lateral Support

Four individual curved girders provide lateral support for the reactor vessel. They are located on a ledge on the primary shield wall and are in contact with the vertical supports. A more complete description is contained in Subsection 3.8.3.

2. Vertical Support

Vertical supports for the reactor vessel (Figure 5.4-15) are individual air-cooled rectangular box structures located beneath the vessel nozzles and bolted to the primary shield wall concrete. Each box structure consists of a horizontal top plate that receives loads from the reactor vessel shoe, a horizontal bottom plate which transfers the loads to the primary shield wall concrete, and connecting vertical plates which bear against an embedded support. The supports are air cooled to maintain the supporting concrete temperature within acceptable levels.

b. Steam Generator

As shown in Figure 5.4-16, the steam generator supports consist of the following elements:

1. Vertical Support

Four individual columns provide vertical support for each steam generator. These are bolted at the top to the steam generator and at the bottom to the concrete structure. Spherical ball bushings at the top and bottom of each column allow unrestrained lateral movement of the steam generator during heatup and cooldown. The column base design permits both horizontal and vertical adjustment of the steam generator for erection and adjustment of the system.

2. Lower Lateral Support

Lateral support is provided at the generator tube sheet by fabricated steel girders and struts. These are bolted to the compartment walls and include bumpers that bear against the steam generator, but permit unrestrained movement of the steam generator during changes in system temperature. Stresses in the beams caused by wall displacements during compartment pressurization are considered in the design.

3. Upper Lateral Support

The upper lateral support of the steam generator is provided by a ring band at the operating deck with struts that restrain sudden seismic or blowdown-induced motion, but permit the normal thermal movement of the steam generator. Movement perpendicular to the thermal growth direction of the steam generator is prevented by struts.

c. Reactor Coolant Pump

Three individual columns, similar to those used for the steam generator, provide the vertical support for each pump. Lateral support for seismic and blowdown loading is provided by three lateral tension tie bars. The pump supports are shown in Figure 5.4-17.

d. Pressurizer

The supports for the pressurizer, as shown in Figure 5.4-18 and Figure 5.4-19, consist of:

1. A steel ring plate between the pressurizer skirt and the supporting concrete slab. The ring serves as a leveling and adjustment member for the pressurizer, and may also be used as a template for positioning the concrete anchor bolts.

2. The upper lateral support consists of a frame that bears against the "seismic lugs" provided on the pressurizer, and is attached to the compartment walls.

5.4.14.3 Evaluation

Detailed evaluation ensures the design adequacy and structural integrity of the reactor coolant loop and the primary equipment supports system. This detailed evaluation is made by comparing the analytical results with established criteria for acceptability. Structural analyses are performed to demonstrate design adequacy for safety and reliability of the plant in case of a large or small seismic disturbance and/or LOCA conditions. Loads which the system is expected to encounter often during its lifetime (thermal, weight, pressure) are applied and stresses are compared to allowable values as described in Subsection 3.9(N).1.4.

5.4.14.4 Tests and Inspections

Nondestructive examinations are performed in accordance with the procedures of the ASME Code, Section V, except as modified by the ASME Code, Section III, Subsection NF or as noted in Subsection 3.8.3.

5.4.15 References

1. "Reactor Coolant Pump Integrity in LOCA," WCAP-8163, September 1973.

2. Deleted

3. De Rosa, P., et al., "Evaluation of Steam Generator Tube, Tube Sheet and Divider Plate Under Combined LOCA Plus SSE Conditions," WCAP-7832-A, April 1978.

4. "Pipe Breaks for the LOCA Analysis of the Westinghouse Primary Coolant Loop," WCAP-8082-P-A (Proprietary) and WCAP-8172-A (Nonproprietary), January 1975.

5. "Technical Bases for Eliminating Large Primary Loop Rupture as the Structural Design Basis for Seabrook Units 1 and 2," WCAP-10567, June 1984 (Proprietary) and WCAP-10566 (Nonproprietary), June 1984.

6. Final Rule Modifying 10 CFR 50 Appendix A, GDC-4 dated October 27, 1987 [52 FR 41288]

SEABROOK STATION
UPDATED FINAL SAFETY ANALYSIS REPORT

CHAPTER 5
REACTOR COOLANT SYSTEM AND CONNECTED SYSTEMS

TABLES

5.1-1	System Design and Operating Parameters
5.2-1	Applicable Code Addenda for Reactor Coolant System Components
5.2-2	Class 1 Primary Components Material Specifications
5.2-3	Class 1 and 2 Auxiliary Components Material Specifications
5.2-4	Reactor Vessel Intervals for Emergency Core Cooling
5.2-6	Reactor Coolant Pressure Boundary Piping Line Numbers
5.2-7	Reactor Coolant Pressure Boundary Valve Numbers
5.2-8	Typical Plant Thermal-Hydraulic Parameters
5.3-1	Reactor Vessel Design Parameters
5.3-2	Reactor Vessel Quality Assurance Program
5.3-3	Seabrook Unit 1 Reactor Vessel Materials Properties
5.3-4	Seabrook Unit 1 Reactor Vessel Bolting Material Properties
5.3-5	Seabrook Unit 1 Reactor Vessel Beltline Region Shell Plate Toughness
5.3-6	Seabrook Unit 1 Reactor Vessel Beltline Region Weld Metal and HAZ Material Toughness
5.4-1	Reactor Coolant Pump Design Parameters
5.4-2	Reactor Coolant Pump Quality Assurance Program
5.4-3	Steam Generator Design Data
5.4-4	Steam Generator Quality Assurance Program
5.4-5	Reactor Coolant Piping Design Parameters
5.4-6	Reactor Coolant Piping Quality Assurance Program
5.4-7	Design Bases for Residual Heat Removal System Operation

5.4-8	Residual Heat Removal System Component Data
5.4-9	Pressurizer Design Data
5.4-10	Reactor Coolant System Design Pressure Settings
5.4-11	Pressurizer Quality Assurance Program
5.4-12	Pressurizer Relief Tank Design Data
5.4-13	Safety/Relief Valves Discharging to the Pressurizer Relief Tank
5.4-14	Reactor Coolant System Valve Design Parameters
5.4-15	Reactor Coolant System Valves Nondestructive Examination Program
5.4-16	Pressurizer Valves Design Parameters
5.4-17	Failure Mode and Effects Analysis - Residual Heat Removal System – Active Components - Plant Cooldown Operation

TABLE 5.1-1 SYSTEM DESIGN AND OPERATING PARAMETERS

Plant Design Life, years			40
Nominal Operating Pressure, psig			2235
Total System Volume Including Pressurizer and Surge Line, ft^3			12,265
System Liquid Volume, Including Pressurizer Water at Maximum Guaranteed Power, ft^3			11,524
Pressurizer Spray Rate, Maximum, gpm			900
Pressurizer Heater Capacity, kW			1753.8
System Thermal and Hydraulic Data	Tavg*		4 Pumps Running
NSSS Power, MWt	589.1	571.0	3678**
Reactor Power, MWt			3659**
Thermal Design Flows, gpm			
Active Loop			93,600
Idle Loop			-
Reactor			374,400
Total Thermal Design Flow, 10^6 lb./hr	139.4	143.0	-
Temperatures, °F			
Reactor Vessel Outlet	621.4	604.3	-
Reactor Vessel Inlet	556.8	537.7	-
Steam Generator Outlet	556.4	537.4	-
Steam Generator Steam	540.0	520.3	-
Feedwater	452.4	452.4	-
Steam Pressure, psia	962	815	-

* 0% SGTP
** Includes Core Power Uncertainty

Total Steam Flow, 10^6 lb./hr	16.52	16.42	-

TABLE 5.1-1 SYSTEM DESIGN AND OPERATING PARAMETERS

Best Estimate Flows, gpm***	
Active Loop	100,500+
Idle Loop	-
Reactor	402,000
Mechanical Design Flows, gpm	
Active Loop	104,200
Idle Loop	-
Reactor	416,800
System Pressure Drops**+	
Reactor Vessel ΔP, psi	47.6
Steam Generator ΔP, psi	40.1
Hot Leg Piping ΔP, psi	1.3
Pump Suction Piping ΔP, psi	3.3
Cold Leg Piping ΔP, psi	3.4*
Pump Head, ft	290

*** Initial Core
** At best estimate flow of 100,500 gpm.
* Includes pump weir ΔP of 2.0 psi
+ 0% SGTP

TABLE 5.2-1 APPLICABLE CODE ADDENDA FOR REACTOR COOLANT SYSTEM COMPONENTS

Reactor Vessel	ASME III, 1971 Edition, through Winter 72
Steam Generator	ASME III, 1971 Edition, through Summer 73
Pressurizer	ASME III, 1971 Edition, through Summer 73
CRDM Housing Full Length	ASME III, 1974 Edition, through Summer 74
CRDM Head Adapter	ASME III, 1971 Edition, through Winter 72
Reactor Coolant Pump	ASME III, 1971 Edition, through Summer 73
Reactor Coolant Pipe	ASME III, 1974 Edition, through Summer 75
Class 1 Interconnecting	ASME III, 1971 Edition, through Winter 72
Piping to the RCS* Surge Line	ASME III, 1974 Edition, through Summer 75
Valves	
Pressurizer Safety	ASME III, 1971 Edition, through Winter 72
Motor Operated	ASME III, 1974 Edition, through Summer 74
Manual	(3" and larger)
ASME III, 1974 Edition, through Summer 74 (2" and smaller)	ASME III, 1974 Edition, through Summer 75
Control	ASME III, 1974 Edition, through Summer 75
Pressurizer Spray	ASME III, 1971 Edition, through Summer 72

* Piping provided by A/E.

TABLE 5.2-2 CLASS 1 PRIMARY COMPONENTS MATERIAL SPECIFICATIONS

Reactor Vessel Components	
Shell and head plates (other than core region)	SA-533, Gr. B, Class 1 (vacuum treated)
Shell plates (core region)	SA-533, Gr. B, Class 1 (vacuum treated)
Shell, flange and nozzle forgings nozzle safe ends	SA-508, Class 2; SA-182, Type F316
CRDM and/or ECCS appurtenances, upper head	SB-167; SA-182, Type F304
Instrumentation tube appurtenances, lower head	SB-166
Closure studs, nuts, washers	SA-540, Class 3, Gr. B24 threaded portions of the closure studs have been treated with an anti galling coating
Core support pads	SB-166 with carbon less than 0.10%
Monitor tubes	SA-312, Type 316; SB-166
Vent pipe	SB-166; SB-167
Vessel supports, seal ledge and head lifting lugs	SA-516, Gr. 70 quenched and tempered; SA-533, Gr. B, Class 1 (vessel supports may be of weld metal build up of strength equivalent to nozzle material)
Cladding and buttering	Stainless steel weld metal analysis A-7* and Ni-Cr-Fe weld metal F-Number 43
Steam Generator Components	
Pressure plates	SA-533, Gr. A, B or C, Class 1 or 2
Pressure forgings (including nozzles and tubesheet)	SA-508, Class 2, 2a or 3
Nozzle safe ends	Stainless steel weld metal analysis A-7*
Channel heads	SA-533, Gr. A, B or C, Class 1 or 2 or SA-216, Gr. WCC
Tubes	SB-163, Ni-Cr-Fe annealed
Cladding and buttering	Stainless steel weld metal analysis A-7* and Ni-Cr-Fe weld metal F-Number 43
Closure bolting	SA-193, Gr. B7 threaded portions may be treated with an anti galling coating

* Designated A-8 in the 1974 edition of the ASME Code

Pressurizer Components	
Pressure plates	SA-533, Gr. A, Class 2
Pressure forgings	SA-508, Class 2a
Nozzle safe ends	SA-182, Type 316L and Ni-Cr-Fe weld metal F-Number 43**
Cladding and buttering	Stainless steel weld metal analysis A-8 and Ni-Cr-Fe weld metal F-Number 43
Closure bolting	SA-193, Gr. B7
Reactor Coolant Pump	
Pressure forgings	SA-182, Type F304, F316, F347 or F348
Pressure casting	SA-351, Gr. CF8, CF8A or CF8M
Tube and pipe	SA-213, 376 or 312, seamless Type 304 or 316
Pressure plates	SA-240, Type 304 or 316
Bar material	SA-479, Type 304 or 316
Closure bolting	SA-193, 320, 540 or 453, Gr. 660
Flywheel	SA-533, Gr. B, Class 1
Reactor Coolant Piping	
Reactor coolant pipe	SA-376, Gr. 304N or SA-351, Gr. CF8A centrifugal casting
Reactor coolant fittings	SA-351, Gr. CF8A
Branch nozzles	SA-182, Gr. F316N
Surge line	SA-376, Gr. 304, 316 or F304N
Auxiliary piping ½ through 12 inch and wall schedules 40S through 80S (ahead of second isolation valve)	ANSI B36.19
All other auxiliary piping (ahead of second isolation valve)	ANSI B36.10
Socket weld fittings	ANSI B16.11
Piping flanges	ANSI B16.5

** Alloy 52M (ERNiCrFe-7A) Weld Overlay Installed

Control Rod Drive Mechanism

Latch housing	SA-182, Gr. F304; SA-351, Gr. CF8
Rod travel housing	SA-182, Gr. F304; SA-336, Gr. F8; SA-312, Gr. Type 304
Cap	SA-479, Type 304
Welding materials	Stainless steel weld metal analysis A-8

TABLE 5.2-3 CLASS 1 AND 2 AUXILIARY COMPONENTS MATERIAL SPECIFICATIONS

Valves	
Bodies	SA-182, Type F316; SA-351, Gr. CF8 or CF8M
Bonnets	SA-182, Type F316; SA-351, Gr. CF8 or CF8M
Discs	SA-182, Type F316; SA-564, Gr. 630
Pressure retaining bolting	SA-453, Gr. 660
Pressure retaining nuts	SA-453, Gr. 660; SA-194, Gr. 6
Auxiliary Heat Exchangers	
Heads	SA-240, Type 304
Nozzle necks	SA-182, Gr. F304; SA-312, Type 304
Tubes	SA-213, Type 304; SA-249, Type 304
Tubesheets	SA-182, Gr. F304; SA-240, Type 304; SA-516, Gr. 70 with stainless steel analysis A-8 cladding
Shells	SA-240 and 312, Type 304
Auxiliary Pressure Vessels, Tanks, Filters, etc.	
Shells and heads	SA-351, Gr. CF8A; SA-240, Type 304; SA-264 clad plate consisting of SA-537, Class 1 with SA-240, Type 304 cladding and stainless steel weld overlay analysis A-8
Flanges and nozzles	SA-182, Gr. F304; SA-350, Gr. LF2 with SA-240, Type 304 and stainless steel weld overlay analysis A-8
Piping	SA-312 and SA-240, Type 304 or 316 seamless
Pipe fittings	SA-403, Gr. WP304 seamless
Closure bolting and nuts	SA-193, Gr. B7; SA-194, Gr. 2H
Auxiliary Pumps	
Pump casing and heads	SA-351, Gr. CF8 or CF8M; SA-182, Gr. F304 or F316
Flanges and nozzles	SA-182, Gr. F304 or F316; SA-403, Gr. WP316L seamless
Piping	SA-312, Type 304 or 316 seamless
Stuffing or packing box cover	SA-351, Gr. CF8 or CF8M; SA-240, Type 304 or 316; SA-182, Gr. F304 or F316
Pipe fittings	SA-403, Gr. WP316L seamless; SA-213, Gr. TP304, TP304L, TP316, or TP316L
Closure bolting and nuts	SA-193, Gr. B6, B7 or B8M and SA-194, Gr. 2H or 8M, SA-453, Gr. 660, and nuts, SA-194, Gr. 2H, 8M, 6, and 7

TABLE 5.2-4 REACTOR VESSELS INTERNALS FOR EMERGENCY CORE COOLING

Forgings	SA-182, Type F304
Plates	SA-240, Type 304
Tubes	SA-213, Type 304
Bars	SA-479, Type 304
Bolting	SA-193, Gr. B8M (65 MYS/90MTS) Code Class 1618, Inconel X-750 SA-673, Gr. 688
Nuts	SA-194, Gr. B8, SA-479, Type 304
Locking Devices	SA-479, Type 304L and Type 304
Hold Down Springs	Type 403 Modified Per WPS 80280NL
Clevis Inserts	SB 166
Clevis Insert Bolts	Inconel X-750, SA 637, Gr. 688, Type II

TABLE 5.2-6 REACTOR COOLANT PRESSURE BOUNDARY PIPING LINE NUMBERS

1-1	12-1	75-1	155-5	251-7	328-6
1-2	13-1	76-1	158-5	256-4	328-7
2-1	21-1	80-1	160-5	258-2	329-4
3-1	30-1	80-2	160-6	259-3	329-5
4-1	30-2	80-6	162-2	260-2	330-4
4-2	30-4	90-5	163-2	261-2	330-5
5-1	30-4	91-1	180-2	261-3	33-14
6-1	30-6	93-1	180-3	261-4	331-5
7-1	30-1	94-1	201-2	270-2	343-1
7-2	48-1	96-1	202-2	272-4	365-2
8-1	48-2	97-1	203-2	272-5	366-2
9-1	48-3	97-3	204-2	273-1	368-1
10-1	49-1	97-4	250-5	274-1	
10-2	58-1	97-5	251-5	275-1	
11-1	74-1	98-1	251-6	275-4	

TABLE 5.2-7 REACTOR COOLANT PRESSURE BOUNDARY VALVE NUMBERS

CSV-0002	RCV-0115	SIV-0050*
CSV-0018	RCV-0116	SIV-0051*
CSV-0034	RCV-0117	SIV-0081*
CSV-0050	RCV-0122	SIV-0082*
CSV-0175	RCV-0124	SIV-0086*
CSV-0176	RCV-0475*	SIV-0087*
CSV-0178	RCV-0479*	SIV-0106*
CSV-0179	RHV-0015*	SIV-0110*
CSV-0181	RHV-0029*	SIV-0118*
CSV-0182	RHV-0030*	SIV-0122*
CSV-0185	RHV-0031*	SIV-0126*
CSV-0186	RHV-0050*	SIV-0130*
CSV-0471	RHV-0051*	SIV-0140*
CSV-0472	RHV-0052*	SIV-0143
CSV-0473	RHV-0053*	SIV-0144*
CSV-0474	RHV-0059	SIV-0147
CSV-0752	RHV-0061	SIV-0148*
RCV-0001	RHV-0063	SIV-0151
RCV-0017	RHV-0065	SIV-0152*
RCV-0022*	SIV-0003	SIV-0155
RCV-0023*	SIV-0005*	SIV-0156*
RCV-0050	SIV-0006*	RC-PCV-456A
RCV-0079	SIV-0017	RC-PCV-456B
RCV-0080	SIV-0020*	RC-LCV-459
RCV-0081	SIV-0021*	RC-LCV-460
RCV-0087*	SIV-0032	RC-PCV-455A
RCV-0088*	SIV-0035*	RC-PCV-455B
RCV-0109	SIV-0036*	
RCV-0110	SIV-0047	

* Reactor coolant pressure isolation valves which require leakage testing in accordance with the Technical Specifications.

TABLE 5.2-8 TYPICAL PLANT THERMAL-HYDRAULIC PARAMETERS

	Units	2-Loop	3-Loop	4-Loop	Seabrook
Heat Output, Core	MWt	1,780	2,652	3,411	3,411
System Pressure	psia	2,250	2,250	2,250	2,250
Coolant Flow	gpm	178,000	265,500	354,000	382,800
Average Core Mass Velocity	10^6lb./hr-ft^2	2.42	2.33	2.50	2.62
Inlet Temperature	°F	545	544	552.5	558.8
Core Average T_{mod}	°F	581	580	588	591.8
Core Length	Ft	12	12	12	12
Average Power Density	kW/1	102	100	104	104
Maximum Fuel Temperature	°F	4,100	4,200	4,200	4,200
Pressurizer Volume	Ft^3	1,000	1,400	1,800	1,800
Pressurizer Volume Ratioed to Primary System Volume		0.157	0.148	0.148	0.146
Peak Surge Rate for Pressurizer Safety Valve Sizing Transient	Ft^3/sec	21.8	33.2	41.0	36.733
Pressurizer Safety Valve Flow at 2500 psia - +3% Accumulation	Ft^3/sec	26.1	36.1	43.3	43.2
Ratio of Safety Valve Flow to Peak Surge Rate		1.197	1.087	1.056	1.179
Full Power Steam Flow per Loop	lb./sec	1,078	1,076	1,038	1,051
Nominal Shell-Side Steam Generator Water Mass per Loop	lb.	100,300	106,000	106,000	107,000

TABLE 5.3-1 REACTOR VESSEL DESIGN PARAMETERS

Design/operating Pressure, psig	2485/2317
Design Temperature, °F	650
Overall Height of Vessel and Closure Head, ft-in (Bottom Head Outside Diameter to top of Control Rod Mechanism Adapter)	43-10
Thickness of Insulation, in.	3 to 4½
Number of Reactor Closure Head Studs	54
Diameter of Reactor Closure Head/Studs, in. (minimum shank)	6 13/16
Inside Diameter of Flange, in.	167
Outside Diameter of Flange, in.	205
Inside Diameter at Vessel Beltline Shell, in.	173
Inlet Nozzle Inside Diameter, in.	27½
Outlet Nozzle Inside Diameter, in.	29
Clad Thickness, minimum, in.	1/8
Lower Head Thickness, minimum, in.	5 3/8
Vessel Beltline Thickness, minimum, in.	8 5/8
Closure Head Thickness, minimum, in.	7

TABLE 5.3-2 REACTOR VESSEL QUALITY ASSURANCE PROGRAM

	NDT METHOD*			
Forgings	RT	UT	PT	MT
1. Flanges		yes		yes
2. Studs, nuts		yes		yes
3. CRD Head Adapter Flange		yes	yes	
4. CRD Head Adapter Tube		yes	yes	
5. Instrumentation Tube		yes	yes	
6. Main Nozzles		yes		yes
7. Nozzle Safe Ends		yes	yes	
Plates	yes		yes	
Weldments				
1. Main Seam	yes	yes		yes
2. CRD Head Adapter to Closure Head Connection			yes	
3. Instrumentation Tube to Bottom Head Connection			yes	
4. Main Nozzle	yes	yes		yes
5. Cladding		yes	yes	
6. Nozzle Safe Ends	yes	yes	yes	

* RT – Radiographic
UT – Ultrasonic
PT - Dye Penetrant
MT - Magnetic Particle

TABLE 5.3-2 REACTOR VESSEL QUALITY ASSURANCE PROGRAM

	NDT METHOD*			
Weldments	RT	UT	PT	MT
7. CRD Head Adaptor Flange to CRD Adaptor Tube	yes		yes	
8. All Full Penetration Ferritic Pressure Boundary Welds Accessible After Hydrotest		yes		yes
9. All Full Penetration Nonferritic Pressure Boundary Welds Accessible After Hydrotest			yes	
10. Seal Ledge				yes
11. Head Lift Lugs				yes
12. Core Pad Welds			yes	

* RT – Radiographic
UT – Ultrasonic
PT - Dye Penetrant
MT - Magnetic Particle

TABLE 5.3-3 SEABROOK UNIT NO. 1 REACTOR VESSEL MATERIALS PROPERTIES

Component	Code No	Material Spec. No.	Cu (%)	Ni (%)	P (%)	T_{NDT} (°F)	RT_{NDT} (°F)	AVG. SHELF ENERGY* NMWD (Ft-Lb)	AVG. SHELF ENERGY* MWD (Ft-Lb)
Closure Head Dome	R1809-1	A533B,CL.1	0.15		0.011	-40	10	80.5	-
Closure Head Torus	R1810-1	A533B,CL.1	0.08		0.012	-50	0	104	-
Closure Head Flange	R1802-1	A508,CL.2	-	0.76	0.013	10	10	105.5	-
Vessel Flange	R1801-1	A508,CL.2	-	0.73	0.012	20	30	91	-
Inlet Nozzle	R1804-1	A508,CL.2	0.10	0.85	0.011	0	0	125	-
Inlet Nozzle	R1804-2	A508,CL.2	0.09	0.89	0.010	-20	-20	125	-
Inlet Nozzle	R1804-3	A508,CL.2	0.08	0.88	0.010	-20	-20	131	-
Inlet Nozzle	R1804-4	A508,CL.2	0.10	0.83	0.013	-20	-20	128	-
Outlet Nozzle	R1805-1	A508,CL.2	**	0.65	0.003	-20	-10	115	-
Outlet Nozzle	R1805-2	A508,CL.2	**	0.67	0.004	-20	-20	132	-
Outlet Nozzle	R1805-3	A508,CL.2	**	0.64	0.009	-10	-10	128	-
Outlet Nozzle	R1805-4	A508,CL.2	**	0.63	0.005	-10	-10	117	-
Nozzle Shell	R1807-1	A533B,CL.1	0.08	0.60	0.011	-30	30	66	-
Nozzle Shell	R1807-2	A533B,CL.1	0.09	0.61	0.012	-40	30	66.5	-
Nozzle Shell	R1807-3	A533B,CL.1	0.06	0.67	0.010	-20	10	107	-

* NMWD - Normal to Major Working Direction
MWD - Major Working Direction
** Generic Cu (%) values when no measurements are available in BWRVIP-173-A [Proprietary]

Component	Code No	Material Spec. No.	Cu (%)	Ni (%)	P (%)	T_{NDT} (°F)	RT_{NDT} (°F)	AVG. SHELF ENERGY* NMWD (Ft-Lb)	AVG. SHELF ENERGY* MWD (Ft-Lb)
Inter. Shell	R1806-1	A533B,CL.1	0.045	0.61	0.012	-30	40	82	139.5
Inter. Shell	R1806-2	A533B,CL.1	0.06	0.64	0.007	-30	0	102	143.5
Inter. Shell	R1806-3	A533B,CL.1	0.075	0.63	0.007	-40	10	115	138
Lower Shell	R1808-1	A533B,CL.1	0.06	0.58	0.005	-30	40	78	120.7
Lower Shell	R1808-2	A533B,CL.1	0.06	0.58	0.007	-20	10	77	127
Lower Shell	R1808-3	A533B,CL.1	0.07	0.59	0.007	-20	40	78	130.7
Bottom Head Torus	R1811-1	A533B,CL.1	0.15		0.010	-50	0	94.5	-
Bottom Head Dome	R1812-1	A533B,CL.1	0.09		0.009	-30	0	97.5	-
Inter. & Lower Shell Long Weld Seams[1, 2]	G1.72[3]	Sub Arc Weld	0.047	0.049	0.008	-50	-60	200	-
Inter. to Lower Shell Girth Weld Seam[1, 2]	G1.72[3]	Sub Arc Weld	0.047	0.049	0.008	-50	-60	200	-
Surveillance Weld[1, 2]		Sub Arc Weld	0.047	0.049		-60	-60	160	

1. The welds were fabricated with Wire Heat No. 4P6052, Linde 0091 Flux, Lot No. 0145 per WCAP-10110 (FP 56056)
2. Weld Cu and Ni Values from WCAP-16526 (FP 25626) which are best estimates.
3. Combustion Engineering weld qualification in response to NRC Bulletin No. 78-12, June 8, 1979.

TABLE 5.3-4 SEABROOK UNIT NO. 1 REACTOR VESSEL BOLTING MATERIAL PROPERTIES CLOSURE HEAD STUDS

Heat No.	Material Spec. No.	Bar No.	0.2% Yield Strength KSI	Ultimate Tensile Strength KSI	Elong. %	Reduction in Area (RA) %	Energy Energy Ft-lb	LateraL Expansion Mils	BHN
84176	SA540, B24	392	145.0	160.0	16.5	51.4	49, 50, 52	29, 30, 30	341
84176	SA540, B24	392-1	144.0	159.0	16.0	50.0	52, 54, 53	30, 33, 31	331
84176	SA540, B24	397	145.5	159.0	16.0	50.0	49, 48, 48	26, 26, 28	321
84176	SA540, B24	397-1	146.5	160.0	16.0	51.9	51, 51, 53	30, 30, 36	331
84176	SA540, B24	401	144.5	159.5	17.0	52.5	49, 51, 50	25, 28, 28	331
84176	SA540, B24	401-1	146.2	162.0	17.0	53.3	50, 50, 50	31, 31, 30	341
63182	SA540, B24	403	139.0	154.5	16.5	50.3	57, 54, 55	32, 33, 33	331
63182	SA540, B24	403-1	144.5	158.0	16.0	51.9	51, 50, 51	28, 30, 30	331
63182	SA540, B24	407	141.0	156.0	17.0	53.0	54, 55, 52	33, 33, 31	331
63182	SA540, B24	407-1	147.0	161.0	17.0	54.7	50, 51, 50	26, 28, 25	341
43320	SA540, B24	490	137.2	153.0	16.0	48.9	55, 55, 56	37, 36, 36	321
43320	SA540, B24	490-1	140.0	154.5	17.0	51.0	54, 52, 54	36, 31, 35	331
43320	SA540, B24	491	144.2	159.0	16.5	50.0	48, 47, 47	29, 29, 27	-
43320	SA540, B24	491-1	134.5	150.0	16.5	48.6	50, 54, 52	31, 36, 33	-

TABLE 5.3-4 SEABROOK UNIT NO. 1 REACTOR VESSEL BOLTING MATERIAL PROPERTIES CLOSURE HEAD STUDS

Heat No.	Material Spec. No.	Bar No.	0.2% Yield Strength KSI	Ultimate Tensile Strength KSI	Elong. %	Reduction in Area (RA) %	Energy Energy Ft-lb	LateraL Expansion Mils	BHN
Closure Head Nuts and Washers									
63182	SA540, B24	135	147.5	161.0	17.0	53.0	49, 49, 51	28, 29, 30	321
63182	SA540, B24	135-1	143.2	157.0	17.5	55.2	55, 54, 52	33, 32, 31	321
63182	SA540, B24	137	145.0	159.0	16.5	54.8	54, 54, 53	33, 33, 29	331
63182	SA540, B24	137-1	147.0	160.0	17.0	55.7	54, 55, 54	34, 36, 33	321
63182	SA540, B24	143	145.0	159.0	18.0	58.1	55, 54, 54	33, 32, 32	331
63182	SA540, B24	143-1	147.0	160.0	17.0	57.3	54, 50, 52	33, 29, 30	321
63182	SA540, B24	145	145.0	159.0	17.0	56.0	54, 54, 55	34, 35, 34	321
63182	SA540, B24	145-1	146.2	159.8	17.0	57.0	56, 55, 54	36, 35, 36	331
63182	SA540, B24	148	144.0	157.5	17.5	56.5	56, 55, 55	33, 34, 34	331
63182	SA540, B24	148-1	148.5	162.0	17.0	55.6	52, 51, 52	33, 28, 30	321
63182	SA540, B24	150	144.8	158.0	17.5	55.7	55, 55, 54	33, 30, 31	331
63182	SA540, B24	150-1	145.8	160.0	17.0	56.5	53, 50, 52	33, 30, 31	331

TABLE 5.3-5 SEABROOK UNIT 1 REACTOR VESSEL BELTLINE REGION SHELL PLATE TOUGHNESS (TRANSVERSE DIRECTION)[a]

Inter. Shell Plate R1806-1				Inter. Shell Plate R1806-2				Inter. Shell Plate R1806-3			
Test Temp. (°F)	Energy (ft-lb.)	Shear (%)	Lat. Exp. (mils)	Test Temp. (°F)	Energy (ft-lb.)	Shear (%)	Lat. Exp. (mils)	Test Temp. (°F)	Energy (ft-lb.)	Shear (%)	Lat. Exp. (mils)
-20	12	0	8	-20	10	0	6	-20	9	0	4
-20	10	0	7	-20	14	0	9	-20	11	0	7
-20	12	0	9	-20	14	0	9	-20	10	0	5
30	26	10	18	30	43	20	28	20	30	10	19
30	22	10	15	30	40	15	26	20	37	15	26
30	33	15	22	30	23	10	16	20	40	15	28
60	44	20	28	50	48	20	34	60	40	15	27
60	40	20	25	50	47	20	35	60	78	30	52
60	41	20	27	50	47	20	34	60	67	25	46
90	49	25	38	60	51	20	36	70	64	30	48
90	55	25	42	60	50	20	37	70	50	20	36
90	52	25	38	60	50	20	37	70	65	30	45

(a) From Lukens Steel CMTRs

TABLE 5.3-5 SEABROOK UNIT 1 REACTOR VESSEL BELTLINE REGION SHELL PLATE TOUGHNESS (TRANSVERSE DIRECTION)[(a)]

Inter. Shell Plate R1806-1				Inter. Shell Plate R1806-2				Inter. Shell Plate R1806-3			
Test Temp. (°F)	Energy (ft-lb.)	Shear (%)	Lat. Exp. (mils)	Test Temp. (°F)	Energy (ft-lb.)	Shear (%)	Lat. Exp. (mils)	Test Temp. (°F)	Energy (ft-lb.)	Shear (%)	Lat. Exp. (mils)
100	53	30	41	100	69	40	53	100	85	60	62
100	50	25	40	100	71	40	52	100	82	50	57
100	61	35	48	100	71	40	53	100	86	60	64
160	78	90	61	160	94	90	67	160	105	95	71
160	84	95	66	160	93	90	66	160	102	90	69
160	76	90	58	160	93	90	64	160	107	95	75
212	85	100	67	212	102	100	76	212	119	100	77
212	86	100	62	212	100	100	71	212	118	100	76
212	75	100	56	212	105	100	74	212	108	100	68

(a) From Lukens Steel CMTRs

TABLE 5.3-5 SEABROOK UNIT 1 REACTOR VESSEL BELTLINE REGION SHELL PLATE TOUGHNESS (TRANSVERSE DIRECTION)[(a)]

Lower Shell Plate R1808-1				Lower Shell Plate R1808-2				Lower Shell Plate R1808-3			
Test Temp. (°F)	Energy (ft-lb.)	Shear (%)	Lat. Exp. (mils)	Test Temp. (°F)	Energy (ft-lb.)	Shear (%)	Lat. Exp. (mils)	Test Temp. (°F)	Energy (ft-lb.)	Shear (%)	Lat. Exp. (mils)
-40	8	0	4	-40	9	0	6	-40	9	0	5
-40	12	0	8	-40	9	0	7	-40	8	0	5
-40	10	0	6	-40	13	0	8	-40	7	0	4
0	21	5	16	0	24	10	19	0	18	5	10
0	17	0	12	0	19	5	14	0	18	5	12
0	17	0	13	0	28	15	22	0	17	5	10
30	26	10	21	40	34	15	26	40	23	5	17
30	28	10	22	40	40	20	32	40	34	15	23
30	32	15	24	40	39	20	30	40	26	10	19
60	37	15	29	60	56	30	43	60	36	15	28
60	43	15	34	60	41	25	31	60	32	15	26
60	38	15	32	60	41	25	32	60	38	15	28

(a) From Lukens Steel CMTRs

TABLE 5.3-5 SEABROOK UNIT 1 REACTOR VESSEL BELTLINE REGION SHELL PLATE TOUGHNESS (TRANSVERSE DIRECTION)[(a)]

Lower Shell Plate R1808-1				Lower Shell Plate R1808-2				Lower Shell Plate R1808-3			
Test Temp. (°F)	Energy (ft-lb.)	Shear (%)	Lat. Exp. (mils)	Test Temp. (°F)	Energy (ft-lb.)	Shear (%)	Lat. Exp. (mils)	Test Temp. (°F)	Energy (ft-lb.)	Shear (%)	Lat. Exp. (mils)
90	49	25	38	70	51	25	37	90	50	25	42
90	54	35	40	70	54	25	40	90	45	20	34
90	55	40	42	70	51	25	38	90	51	25	40
100	74	70	55	100	67	90	51	100	54	20	42
100	60	65	50	100	63	80	48	100	52	20	39
100	58	65	47	100	61	80	46	100	50	20	38
160	72	100	60	160	75	100	60	160	67	90	54
160	82	100	62	160	69	100	58	160	75	90	59
160	74	100	58	160	77	100	61	160	76	90	61
212	76	100	50	212	77	100	60	212	76	100	56
212	79	100	63	212	79	100	61	212	78	100	56
212	78	100	64	212	75	100	60	212	80	100	59

(a) From Lukens Steel CMTRs

TABLE 5.3-6 SEABROOK UNIT 1 REACTOR VESSEL BELTLINE REGION WELD METAL AND HAZ MATERIAL TOUGHNESS

Inter & Lower Shell Long & Girth Welds							
Weld Qualification No. G1.72 For Wire Heat No. 4P6052				Weld HAZ Material			
Test Temp. (°F)	Energy (ft-lb.)	Shear (%)	Lat. Exp. (mils)	Test Temp. (°F)	Energy (ft-lb.)	Shear (%)	Lat. Exp. (mils)
-70	7	0	2	-110	22	5	10
-70	6	0	2	-110	28	5	13
-70	7	0	2	-110	19	0	7
-30	19	10	13	-80	38	15	19
-30	20	10	15	-80	30	10	13
-30	24	10	18	-80	49	20	25
-10	58	30	42	-40	70	35	39
-10	128	70	77	-40	103	60	55
-10	122	70	72	-40	101	60	53
10	139	80	81	-10	117	70	58
10	58	30	38	-10	119	70	61
10	122	70	70	-10	81	40	43
60	188	100	72	60	121	100	66
60	205	100	70	60	135	100	68
60	208	100	68	60	152	100	66
100	173	100	81	100	156	100	67
100	227	100	76	100	146	100	70
100	180	100	75	100	132	100	65

TABLE 5.3-6 SEABROOK UNIT 1 REACTOR VESSEL BELTLINE REGION WELD METAL AND HAZ MATERIAL TOUGHNESS

Inter & Lower Shell Long & Girth Welds							
Weld Qualification No. G1.72 For Wire Heat No. 4P6052				Weld HAZ Material			
Test Temp. (°F)	Energy (ft-lb.)	Shear (%)	Lat. Exp. (mils)	Test Temp. (°F)	Energy (ft-lb.)	Shear (%)	Lat. Exp. (mils)
				160	133	100	66
				160	150	100	68
				160	144	100	67

Note: There is also a complete set of charpy data for the surveillance weld that is reported in WCAP.10110 (FP 56056). It is the value used for PTS and USE.

TABLE 5.4-1 REACTOR COOLANT PUMP DESIGN PARAMETERS

Unit design pressure (psig)	2485
Unit design temperature (°F)	650[a]
Unit overall height (ft)	27
Seal water injection (gpm)	8
Seal water return (gpm)	3
Cooling water flow (gpm)	596
Maximum continuous cooling water inlet temperature (°F)	105
<u>Pump</u>	
Type	Vertical, centrifugal, single stage
Capacity (gpm)	100,200[c]
Developed head (ft)	290[c]
NPSH required (ft)	Figure 5.4-2
Suction temperature (°F)	558
Pump discharge nozzle, inside diameter (in.)	27½
Pump suction nozzle, inside diameter (in.)	31
Speed (rpm)	1190[c]
Water volume (ft^3)	80[b]
Weight, dry (lb.)	203,960

[a] Design temperature of pressure retaining parts of the pump assembly exposed to the reactor coolant and injection water on the high pressure side of the controlled leakage seal shall be that temperature determined for the parts for a primary loop temperature of 650°F.

[b] Composed of reactor coolant in the casing and of injection and cooling water in the thermal barrier.

[c] These values represent the pump hydraulic design point. Actual heads, flows, temperatures, and currents are dependent upon system parameters such as fuel, modifications to the reactor internals, percentage of steam generator tube plugging and operating $T_{avg.}$ Values for use in analyses should reflect current conditions.

Motor	
Type	Drip proof, squirrel cage induction, water/air cooled
Power (hp)	7000
Voltage (volts)	13,200
Phase	3
Frequency (Hz)	60
Insulation class	Class B, thermalastic epoxy insulation
Starting current	1720 amp @ 13,200 volts
Input, hot reactor coolant	267 ± 6 amp[c]
Input, cold reactor coolant	334 ± 7 amp[c]

Pump assembly moment of inertia, maximum (lb/ft^2)	
Flywheel	70,000
Motor	22,500
Shaft	520
Impeller	1,980
Total	95,000

[c] These values represent the pump hydraulic design point. Actual heads, flows, temperatures, and currents are dependent upon system parameters such as fuel, modifications to the reactor internals, percentage of steam generator tube plugging and operating $T_{avg.}$ Values for use in analyses should reflect current conditions.

TABLE 5.4-2 REACTOR COOLANT PUMP QUALITY ASSURANCE PROGRAM

	NDT Method*			
	RT	UT	PT	MT
Castings	yes		yes	
Forging				
Main shaft		yes		yes
Main studs		yes		yes
Flywheel (rolled plate)		yes		
Weldments				
Circumferential	yes		yes	
Instrument connections			yes	

* RT - Radiographic
UT - Ultrasonic
PT - Dye penetrant
MT - Magnetic particle

TABLE 5.4-3 STEAM GENERATOR DESIGN DATA

Design Pressure, reactor coolant side, psig	2485
Design Pressure, steam side, psig	1185
Design Pressure, primary to secondary, psi	1600
Design Temperature, reactor coolant side, °F	650
Design Temperature, steam side, °F	600
Design Temperature, primary to secondary, °F	650
Total Heat Transfer Surface Area, ft^2	55,000
Maximum Moisture Carryover, wt percent	0.25
Overall Height, ft-in.	67-8
Number of U-Tubes	5626
U-Tube Nominal Diameter, in.	0.688
Tube Wall Nominal Thickness, in.	0.040
Number of Manways	4
Inside Diameter of Manways, in.	16
Number of Handholes	6
Design Fouling Factor, ft^2-hr-°F/Btu	0.00006
Steam Flow, lbs/hr	4.106×10^6 - 3.769×10^6

TABLE 5.4-4 STEAM GENERATOR QUALITY ASSURANCE PROGRAM

	NDT Method*				
	RT	UT	PT	MT	ET
Tubesheet					
Forging		yes		yes	
Cladding		yes(+)	yes		
Channel-Head (if fabricated)					
Fabrication	yes(++)	yes(+++)		yes	
Cladding			yes		
Secondary Shell and Head					
Plates			yes		
Tubes			yes		
Nozzles.-(Forgings)		yes		yes	yes
Weldments					
Shell, longitudinal	yes			yes	
Shell, circumferential	yes			yes	
Cladding (channel head- tubesheet joint cladding restoration)			yes		
Primary nozzles to fab head		yes			yes
Manways to fab head	yes			yes	
Steam and Feedwater nozzle to shell	yes			yes	
Support brackets				yes	
Tube to tubesheet			yes		
Instrument connections (primary and secondary)				yes	
Temporary attachments after removal				yes	
After hydrostatic test (all major pressure boundary welds and complete cast channel head - where accessible)				yes	
Nozzle safe ends (if weld deposit)	yes		yes		

* RT - Radiographic
UT - Ultrasonic
PT - Dye Penetrant
MT - Magnetic Particle
ET - Eddy Current

(+) Flat Surface Only
(++) Weld Deposit
(+++) Base Material Only

TABLE 5.4-5 REACTOR COOLANT PIPING DESIGN PARAMETERS

Reactor inlet piping, inside diameter (in.)	27½
Reactor inlet piping, nominal wall thickness (in.)	2.32
Reactor outlet piping, inside diameter (in.)	29
Reactor outlet piping, nominal wall thickness (in.)	2.45
Coolant pump suction piping, inside diameter (in.)	31
Coolant pump suction piping, nominal wall thickness (in.)	2.60
Pressurizer surge line piping, nominal pipe size (in.)	14
Pressurizer surge line piping, nominal wall thickness (in.)	1.406
Reactor Coolant Loop Piping	
Design/operating pressure (psig)	2485/2235
Design temperature (°F)	650
Pressurizer Surge Line	
Design pressure (psig)	2485
Design temperature (°F)	680
Pressurizer Safety Valve inlet Line	
Design pressure (psig)	2485
Design temperature (°F)	680
Pressurizer (Power Operated) Relief Valve Inlet Line	
Design pressure (psig)	2485
Design temperature (°F)	680

TABLE 5.4-6 REACTOR COOLANT PIPING QUALITY ASSURANCE PROGRAM

	NDT Method*		
	RT	UT	PT
Castings	yes		yes (after finishing)
Forgings		yes	yes (after finishing)
Weldments			
Circumferential	yes		yes
Nozzle to runpipe (except no RT for nozzles less than 6 inches)	yes		yes
Instrument connections			yes

* RT - Radiographic
UT - Ultrasonic
PT - Dye Penetrant

TABLE 5.4-7 DESIGN BASES FOR RESIDUAL HEAT REMOVAL SYSTEM OPERATION

Residual Heat Removal System startup	Approximately 4 hours after reactor shutdown
Reactor Coolant System initial pressure (psig)	Approximately 425
Reactor Coolant System initial temperature (°F)	Approximately 350
Component cooling water design temperature (°F)	102
Cooldown time (hours after initiation of Residual Heat Removal System operation)	Approximately 20
Reactor Coolant System temperature at end of cooldown (°F)	125
Decay heat generation at 24 hours after reactor shutdown (Btu/hr)	76.6×10^6

TABLE 5.4-8 RESIDUAL HEAT REMOVAL SYSTEM COMPONENT DATA

Residual Heat Removal Pump

Number	2
Design pressure (psig)	600
Design temperature (°F)	400
Design flow (gpm)	3000
Design head (ft)	375
Power (hp)	400

Residual Heat Exchanger

Number	2
Design heat removal capacity (Btu/hr)	35.1×10^6
Estimated UA (Btu/hr-°F)	2.0×10^6

	Tube side	Shell side
Design pressure (psig)	600	150
Design temperature (°F)	400	200
Design flow (lb/hr)	1.48×10^6	2.475×10^6
(gpm)	3000	5000
Inlet temperature (°F)	125	85
Outlet temperature (°F)	102.7	98.3
Material	Carbon steel/Austenitic stainless steel	Carbon Steel
Fluid	Reactor coolant	Component cooling water

TABLE 5.4-9 PRESSURIZER DESIGN DATA

Design pressure (psig)	2485
Design temperature (°F)	680
Surge line nozzle diameter (in.)	14
Heatup rate of pressurizer using heaters only (°F/hr)	55
Internal volume (ft^3)	1800

TABLE 5.4-10 REACTOR COOLANT SYSTEM DESIGN PRESSURE SETTINGS

	psig
Hydrostatic test pressure	3107
Design Pressure	2485
Operating pressure	2235
Safety valves (begin to open)	2485
High pressure reactor trip	2385
High pressure alarm	2310
Power-operated relief valves	2385*
Pressurizer spray valves (full open)	2310
Pressurizer spray valves (begin to open)	2260
Proportional heaters (begin to operate)	2250
Proportional heaters (full operation)	2220
Backup heaters on	2210
Low pressure alarm	2210
Pressurizer power-operated relief valve interlock	2335
Low pressure reactor trip (typical, but variable)	1945

* At 2385 psig, a pressure signal initiates actuation (opening) of these valves. Remote manual control is also provided.

TABLE 5.4-11 PRESSURIZER QUALITY ASSURANCE PROGRAM

	NDT Method[a]			
	RT	UT	PT	MT
Heads				
Plates		yes		
Cladding			yes	
Shell				
Plates		yes		
Cladding			yes	
Heaters				
Tubing[b]		yes	yes	
Centering of element	yes			
Nozzle (Forgings)		yes	yes[c]	yes[c]
Weldments				
Shell, longitudinal	yes			yes
Shell, circumferential	yes			yes
Cladding			yes	
Nozzle safe end	yes		yes	
Instrument connection			yes	
Support skirt, longi tudinal seam	yes			yes
Support skirt to lower head		yes		yes
Temporary attachments(after removal)				yes
All external pressure boundary welds after shop hydrostatic test				yes

[a] RT - Radiographic
UT - Ultrasonic
PT - Dye Penetrant
MT - Magnetic Particle

[b] Or a UT and ET

[c] MT or PT

TABLE 5.4-12 PRESSURIZER RELIEF TANK DESIGN DATA

Design Pressure, psig		100
Normal Operating Pressure, psig		2-6
Rupture Disc Release Pressure, psig	Nominal	91
	Range	86-100
Normal Water Volume, ft^3		1350
Normal Gas Volume, ft^3		450
Design Temperature, °F		340
Normal Operating Water Temperature, °F		<120
Total Rupture Disc Relief Capacity, Saturated Steam at100 psig, lb/hr		$1.6x10^6$

TABLE 5.4-13 SAFETY/RELIEF VALVES DISCHARGING TO THE PRESSURIZER RELIEF TANK

Reactor Coolant System		
3	Pressurizer safety valves	Figure 5.1-4
2	Pressurizer power-operated relief valves	Figure 5.1-4
2	Residual heat removal pump suction line from the Reactor Coolant System hot legs	Figure 5.1-3, Sheets 1 & 4
2	Between RHR Loop Isolation Valves	Figure 5.1-3, Sheets 1 & 4
Chemical and Volume Control System		
2	Seal water return line	Figures 9.3-26 through 9.3-29
1	Letdown line	Figures 9.3-26 through 9.3-29

TABLE 5.4-14 REACTOR COOLANT SYSTEM VALVE DESIGN PARAMETERS

Design/normal operating pressure (psig)	2485/2235
Preoperational plant hydrotest (psig)	3107
Design temperature (°F)	650

TABLE 5.4-15 REACTOR COOLANT SYSTEM VALVES NONDESTRUCTIVE EXAMINATION PROGRAM

	NDT Method[a]		
	RT	UT	PT
Castings (larger than 4 inches)	yes		yes
(2 inches to 4 inches)	yes[b]		yes
Forgings (larger than 4 inches)	yes[b]		yes
(2 inches to 4 inches)	[c]	[c]	yes

[a] RT - Radiographic
UT - Ultrasonic
PT - Dye Penetrant
[b] Welds ends only
[c] Either RT or UT

TABLE 5.4-16 PRESSURIZER VALVES DESIGN PARAMETERS

Pressurizer Spray Control Valves	
Number	2
Design pressure, psig	2485
Design temperature, °F	650
Design flow for valves full open, each, gpm	450
Pressurizer Safety Valves	
Number	3
Design pressure, psig	2485
Design temperature, °F	680
Maximum relieving capacity, ASME rated flow, lb/hr (per valve)	420,000
Set pressure, psig	2485
Fluid Saturated steam	
Backpressure:	
Expected during discharge, psig	500
Pressurizer Power-operated Relief Valves	
Number 2	
Design pressure, psig 2485	
Design temperature, °F 680	
Relieving capacity at 2385 psig, lb/hr (per valve)	210,000
Fluid Saturated steam	

TABLE 5.4-17 FAILURE MODE AND EFFECTS ANALYSIS - RESIDUAL HEAT REMOVAL SYSTEM - PLANT COOLDOWN OPERATION

Component	Failure Mode	*Effect on System Operation	**Failure Detection Method	Remarks
1. Motor-operated gate valve RC-V23 (RC-V88 Analogous)	a. Fails to open on demand (open manual mode CB switch selection)	a. Failure blocks reactor coolant flow from hot leg of RC loop #1 through Train A of RHRS. Fault reduces redundancy of RHR coolant trains provided. No effect on safety for system operation. Plant cooldown requirements will be met by reactor coolant flow from hot leg of RC loop #4 flowing through Train B of RHRS; however, time required to reduce RCS temperature will be extended	a. Valve position indication (closed to open position change) at CB; RC Pressure indication (RC-PI-405) at CB; RHR Train A discharge flow indication RH-FI-618) at CB; and RHR pump discharge pressure indication (RH-PI-614) at CB.	1. Valve is electrically interlocked with RHR to charging pump suction line isolation valve (RH-V35) and with a "prevent-open" RC pressure interlock (PB-405). The valve cannot be opened from the CB if the indicated isolation valve is open or if RC pressure exceeds the interlock condition.
	b. Once open, fails closed (open manual mode CB switch selection)	b. Same effect on system operation as that stated above for failure mode "Fails to open on demand."	b. Same method of detection as those stated above for failure mode "Fails to open on demand."	2. If both trains of RHRS system are unavailable for plant cooldown due to multiple component failures, the Emergency Feedwater System and S.G. power operated relief valves can be used to perform the safety function of removing residual heat.
2. Motor-operated gate valve RC-V22 (RC-V87 analogous)	a. Same failure modes as those stated for item #1.	a. Same effect on system operation as that stated for item #1.	a. Same methods of detection as those stated for item #1, except for RC pressure indication (RC-PI-403) at CB.	1. Same remarks as those stated for item #1, except for pressure interlock (PB-403) control.
3. Residual heat removal pump RH-P- 8A, (pump RH-P-8B analogous)	a. Fails to deliver working fluid.	a. Failure results in loss of reactor coolant flow from hot leg of RC loop #1 through Train A of RHRS. Fault reduces redundance of RHR coolant trains provided. No effect on safety for system operation. Plant cooldown requirements will be met by reactor coolant flow from hot leg of RC loop #4 flowing through Train B of RHRS; however, time required to reduce RCS temperature will be extended.	a. Open pump switchgear circuit breaker indication at CB; circuit breaker close position monitor light for group monitoring of components at CB; common breaker trip alarm at CB; RC pressure indication (RC-PI-405) at CB; RHR Train A discharge flow indication (RH-FI-618) (see item #11) at CB; and pump discharge pressure indication (RH-PI-614) at CB.	1. The RHRS shares components with the ECCS. Pumps are tested as part of the ECCS testing program (see Subsection 6.3.4). Pump failure may also be detected during ECCS testing.

TABLE 5.4-17 FAILURE MODE AND EFFECTS ANALYSIS - RESIDUAL HEAT REMOVAL SYSTEM - PLANT COOLDOWN OPERATION

Component	Failure Mode	*Effect on System Operation	**Failure Detection Method	Remarks
4. Motor-operated globe valve RH-FCV-610 (RH-FCV-611 analogous)	a. Fails to open on demand (open manual mode CB switch selection).	a. Failure blocks miniflow line to suction of RHR pump A during cooldown operation. No effect on safety for system operation. Plant cooldown requirements will be met by reactor coolant flow from hot leg of RC loop#4 flowing through Train B of RHRS; however, time required to reduce RCS temperature will be extended.	a. Valve position indication (closed to open position change) at CB.	1. Valve is automatically controlled to open when pump discharge is less than ~750 gpm and close when the discharge exceeds ~1400 gpm. The valve protects the pump from dead-heading during ECCS operation. CB switch set to "Auto" position for automatic control of valve positioning.
	b. Fails to close on demand ("Auto" mode CB switch selection).	b. Failure allows for a portion of RHR heat exchanger A discharge flow to be bypassed to a suction of RHR pump A. RHRS Train A is degraded for the regulation of coolant temperature by RHR heat exchanger A. No effect on safety for system operation. Cooldown of RCS within established specification cooldown rate may be accomplished through operator action of throttling flow control valve RH-HCV-606 and controlling cooldown with redundant RHRS Train B	b. Valve position indication (open to closed positioning change) and RHRS Train A discharge flow indication(RH-FI-618) at CB.	
5. Air diaphragm operated butterfly Valve RH-FCV-618 (RH-FCV-619 analogous)	a. Fails to open on demand ("Auto" mode CB switch selection).	a. Failure prevents coolant Discharged from RHR pump A from bypassing RHR heat Exchanger A resulting in Mixed mean temperature of coolant flow to RCS being low. RHRS Train A is degraded for the regulation of controlling temperature of coolant. No effect on safety for system operation. Cooldown of RCS within established specification rate may be accomplished through operator action of throttling flow control valve RH-HCV-606 and controlling cooldown with redundant RHRS Train B.	a. RHR pump A discharge flow temperature and RHRS Train A discharge to RCS cold leg flow temperature recording (RH-TR-612) at CB; and RHRS Train A discharge to RCS cold leg flow indication (RH-FI-618) at CB.	1. Valve is designed to Fail "closed" and is electrically wired so that electrical solenoid of the air diaphragm operator is energized to open the valve. Valve is normally "closed" to align RHRS for ECCS operation during plant power operation and load follow.
	b. Fails to close on demand ("Auto mode CB switch selection).	b. Failure allows coolant discharged from RHR pump A to bypass RHR heat exchanger A resulting in mixed mean temperature of coolant flow to RCS being high. RHRS Train A is degraded for the regulation of controlling temperature of coolant. No effect on safety for system operation. Cooldown of RCS within established specification rate will be accomplished with redundant RHRS Train B; however, cooldown time will be extended.	b. Same method of detection as those stated above.	

TABLE 5.4-17 FAILURE MODE AND EFFECTS ANALYSIS - RESIDUAL HEAT REMOVAL SYSTEM - PLANT COOLDOWN OPERATION

Component	Failure Mode	*Effect on System Operation	**Failure Detection Method	Remarks
6. Air diaphragm operated butterfly valve RH-HCV-606 (RH-HCV-607 analogous)	a. Fails to close on demand for flow reduction.	a. Failure prevents control of coolant discharge flow from RHR heat exchanger A resulting in loss of mixed mean temperature coolant flow adjustment to RCS. No effect on safety for system operation. Cooldown of RCS within established specification rate may be accomplished by operator action of controlling cooldown with redundant RHRS Train B.	a. Same methods of detection as those stated for item #5. In addition, monitor light and alarm (valve closed) for group monitoring of components at CB. operation and load follow.	1. Valve is designed to fail "open." The valve is normally"open" to align RHRS for ECCS operation during plant power
	b. Fails to open on demand for increased flow.	b. See 5b.	b. Same methods as those stated above for failure mode "Fails to close on demand for flow reduction."	
7. Manual globe valve RH-V18 (RH-V19 analogous)	a. Fails closed	a. Failure blocks flow from Train A of RHRS to CVCS letdown heat exchanger. Fault prevents (during the initial phase of plant cooldown) the adjustment of boron concentration level of coolant in lines of RHRS Train A so that it equals the concentration level in the RCS using the RHR cleanup line to CVCS. No effect on safety for system operation. Operator can balance boron concentration levels by cracking open flow control valve RH-HCV-606 to permit flow to cold leg of loop #1 of RCS in order to balance levels using normal CVCS letdown flow.	a. CVCS letdown flow indication (CS-FI-132) at CB	1. Valve is normally "closed" to align the RHRS for ECCS operation during plant power operation and load follow.
8. Air diaphragm operated globe valve CS-HCV-128.	a. Fails to open on demand.	a. Failure blocks flow from Trains A and B of RHRS to CVCS letdown heat exchanger. Fault prevents use of RHR cleanup line to CVCS for balancing boron concentration levels of RHR Trains A and B with RCS during initial cooldown operation and later in plant cooldown for letdown flow. No effect on safety for system operation. Operator can balance boron concentration levels with similar actions, using pertinent flow control valve RH-HCV-607, as stated above for item #7. Normal CVCS let- down flow can be used for purification if RHRS cleanup line is not available.	a. Valve position indication (degree of opening) at CB and CVCS letdown flow indication (CS-FI-132) at CB.	1. Same remark as that stated above for item #7. 2. Valve is a component of the CVCS that performs an RHR function during plant cooldown operation.
9. Motor-operated gate valve CBS-V2 (CBS- V5 analogous)5	a. Fails to close on demand.	a. Failure reduces the redundancy of isolation valves provided to flow isolate RHRS Train A from RWST. No effect on safety for system operation. Check valve CBS-V55 in series with MO-valve provides the primary isolation against the bypass of RCS coolant flow from the suction of RHR pump A to RWST.	a. Valve position indication (open to closed position change) at CB and valve (closed) monitor light and alarm at CB.	1. Valve is a component of the ECCS that performs an RHR function during plant cooldown. Valve is normally "open" to align the RHRS for ECCS operation during plant operation.

TABLE 5.4-17 FAILURE MODE AND EFFECTS ANALYSIS - RESIDUAL HEAT REMOVAL SYSTEM - PLANT COOLDOWN OPERATION

List of acronyms and abbreviations

Auto - Automatic

CB - Control Board

CVCS - Chemical and Volume Control System

ECCS - Emergency Core Cooling System

MO - Motor-Operated

RC - Reactor Coolant

RCS - Reactor Coolant System

RHR - Residual Heat Removal

RHRS - Residual Heat Removal System

RWST - Refueling Water Storage Tank

SG - Steam Generator

* See list at end of table for definition of acronyms and abbreviations used.

** As part of plant operation, periodic tests, surveillance inspection and instrument calibrations are made to monitor equipment and performance. Failures may be detected during such monitoring of equipment in addition to detection methods noted.

SEABROOK STATION
UPDATED FINAL SAFETY ANALYSIS REPORT

CHAPTER 5
REACTOR COOLANT SYSTEM AND CONNECTED SYSTEMS

FIGURES

5.1-1	Reactor Coolant System Overview
5.1-2	Reactor Coolant System Reactor Vessel P&ID
5.1-3	Reactor Coolant System, Loop No. 1 through Loop 4
5.1-4	Reactor Coolant System Pressurizer
5.1-5	Reactor Coolant System Process Flow Diagram
5.2-1	Weld Surface and I.D. Preparation for Welds Requiring In-Service Inspection
5.2-2	Leak Detection System Instrumentation Engineering Diagram
5.3-1	Reactor Vessel
5.4-1	Reactor Coolant Controlled Leakage Pump
5.4-2	Reactor Coolant Pump Estimated Performance Characteristic
5.4-3	The Quatrefoil Broached Holes
5.4-4	Steam Generator
5.4-5	Normal RHR Cooldown
5.4-6	Single Train RHR Cooldown
5.4-7	RC -Isolation Valves Logic Diagram
5.4-8	RH Pumps low Flow Recirc. Valves Logic Diagram
5.4-9	Residual Heat Removal System Overview
5.4-10	Residual Heat Removal System Train A Detail
5.4-11	Residual Heat Removal System Train B Cross-Tie Detail
5.4-12	Residual Heat Removal System Process Flow Diagram
5.4-13	Pressurizer

5.4-14	Pressurizer Relief Tank
5.4-15	Reactor Vessel Supports
5.4-16	Steam Generator Supports
5.4-17	Reactor Coolant Pump Supports
5.4-18	Reactor Building Internals Pressurizer Supports
5.4-19	Pressurizer Supports

See PID-1-RC-B20840

See PID-1-RC-B20845

See PID-1-RC-B20841

SEABROOK STATION UPDATED FINAL SAFETY ANALYSIS REPORT	Reactor Coolant System, Loop No. 1 through Loop 4 [4 Sheets]	
		Figure 5.1-3 Sh. 1 of 4

See PID-1-RC-B20842

SEABROOK STATION UPDATED FINAL SAFETY ANALYSIS REPORT	Reactor Coolant System, Loop No. 1 through Loop 4 [4 Sheets]	
		Figure 5.1-3 Sh. 2 of 4

See PID-1-RC-B20843

SEABROOK STATION UPDATED FINAL SAFETY ANALYSIS REPORT	Reactor Coolant System, Loop No. 1 through Loop 4 [4 Sheets]	
		Figure 5.1-3 Sh. 3 of 4

See PID-1-RC-B20844

SEABROOK STATION UPDATED FINAL SAFETY ANALYSIS REPORT	Reactor Coolant System, Loop No. 1 through Loop 4 [4 Sheets]	
		Figure 5.1-3 Sh. 4 of 4

See PID-1-RC-B20846

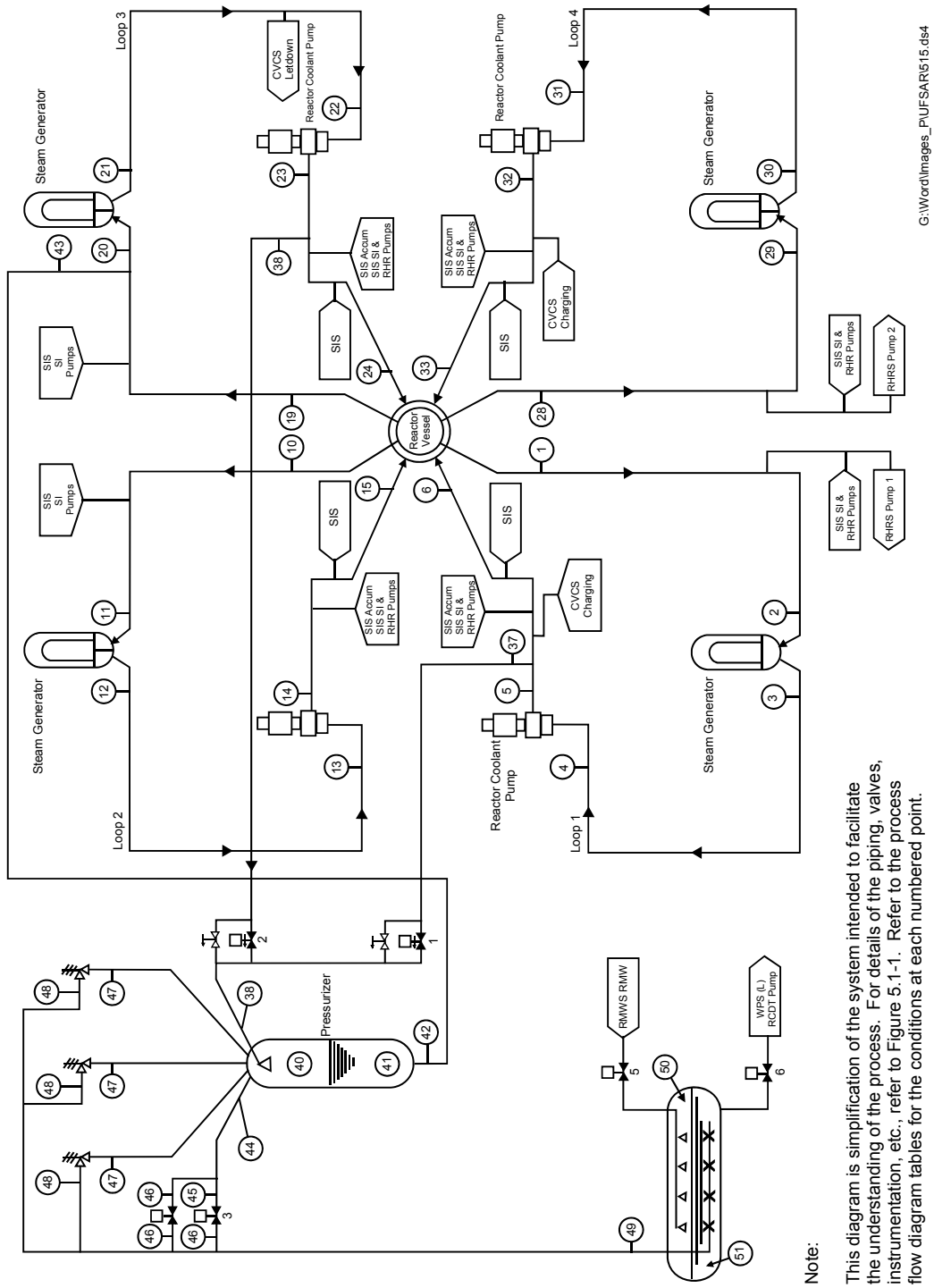

Note:

This diagram is simplification of the system intended to facilitate the understanding of the process. For details of the piping, valves, instrumentation, etc., refer to Figure 5.1-1. Refer to the process flow diagram tables for the conditions at each numbered point.

SEABROOK STATION UPDATED FINAL SAFETY ANALYSIS REPORT	Reactor Coolant System Process Flow Diagram	
		Figure 5.1-5

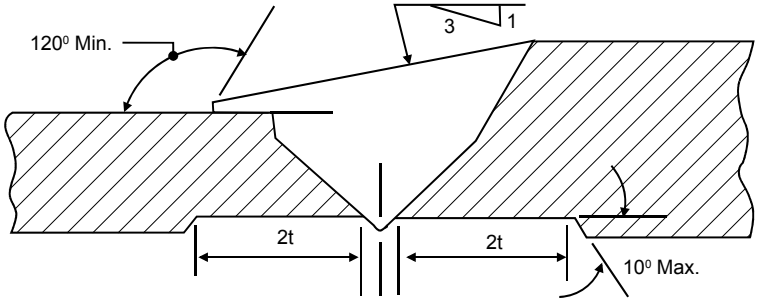

For Weld Ends of Unequal Thickness

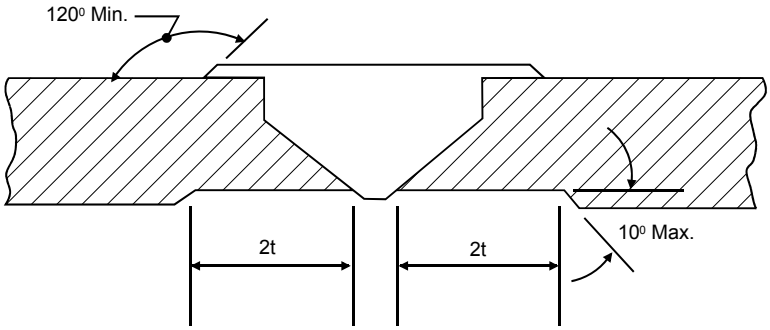

For Weld Ends of Equal Thickness

Notes:

1. Machine or Grind Shop or Field Welds To Obtain Surface Finish of 250µ-Inches RMS Maximum.
2. No Undercutting is Permitted.
3. Remove Sharp Edges.
4. The 2t Dimension Does Not Apply To Fittings.
5. For Details of Weld End Preparation See Drawing 5000-F-1382.

G:\Word\Images_P\UFSAR\521.ds4

SEABROOK STATION UPDATED FINAL SAFETY ANALYSIS REPORT	Weld Surface and I.D. Preparation for Welds Requiring In-Service Inspection	
		Figure 5.2-1

See 1-NHY-500037-1

SEABROOK STATION UPDATED FINAL SAFETY ANALYSIS REPORT	Leak Detection System Instrumentation Engineering Diagram [2 Sheets]	
		Figure 5.2-2 Sh. 1 of 2

See 1-NHY-500037-2

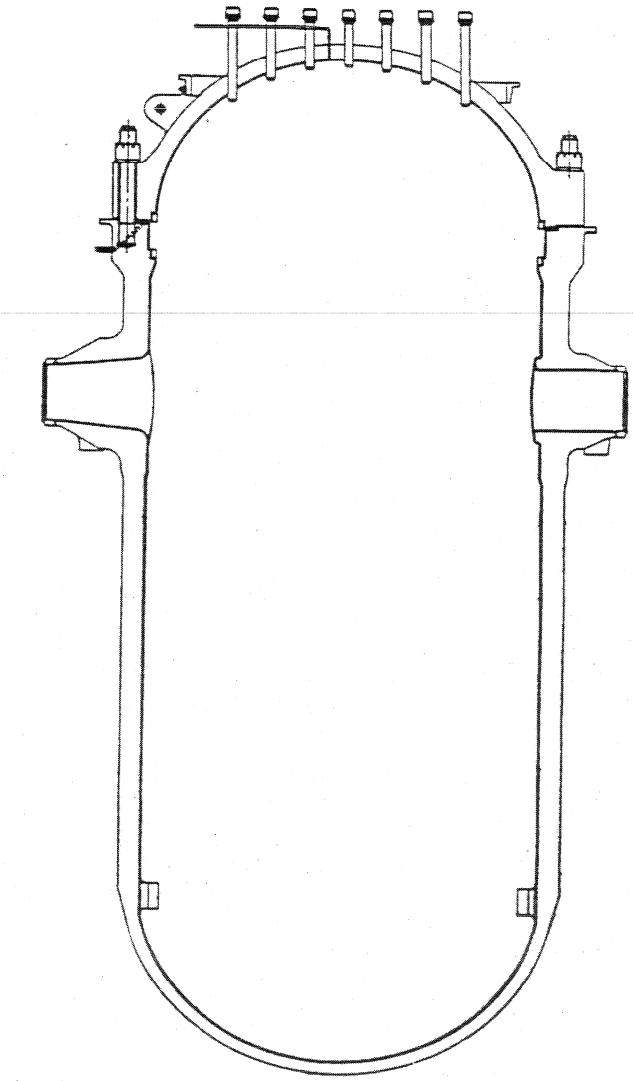

SEABROOK STATION UPDATED FINAL SAFETY ANALYSIS REPORT	Reactor Vessel	
		Figure 5.3-1

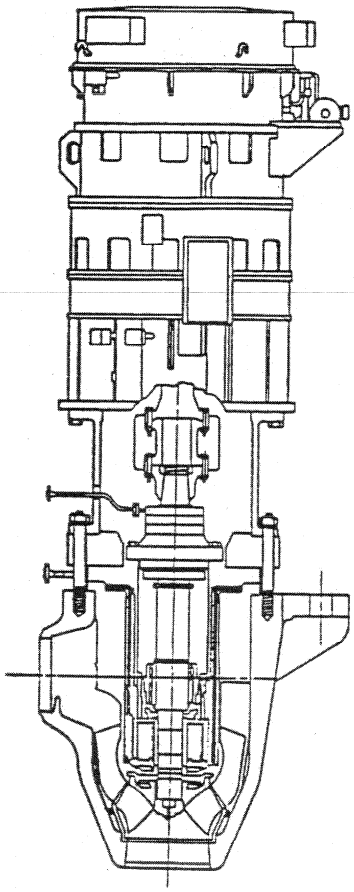

SEABROOK STATION UPDATED FINAL SAFETY ANALYSIS REPORT	Reactor Coolant Controlled Leakage Pump	
		Figure 5.4-1

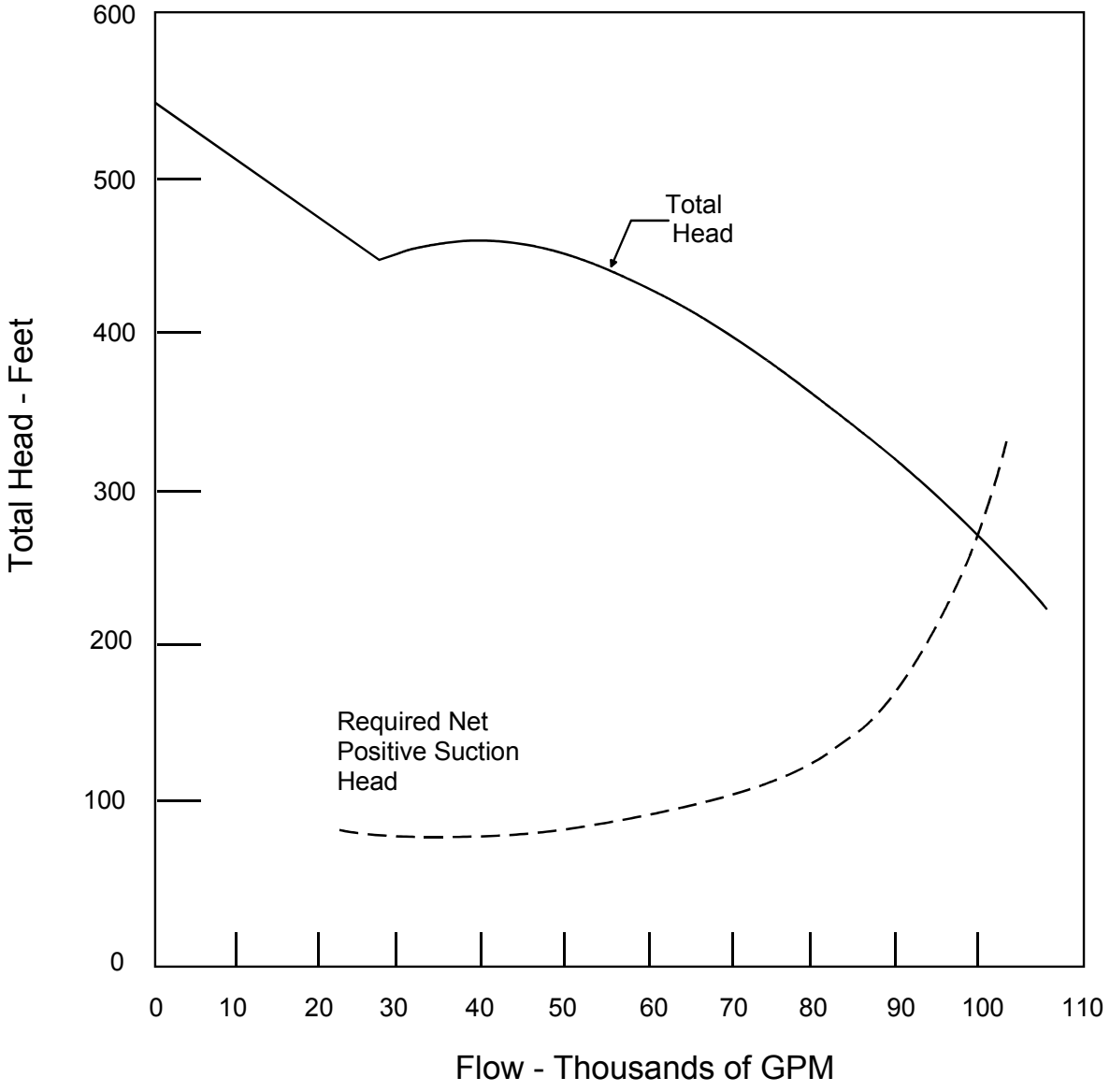

G:\Word\Images_P\UFSAR\542.ds4

SEABROOK STATION UPDATED FINAL SAFETY ANALYSIS REPORT	Reactor Coolant Pump Estimated Performance Characteristic	
		Figure 5.4-2

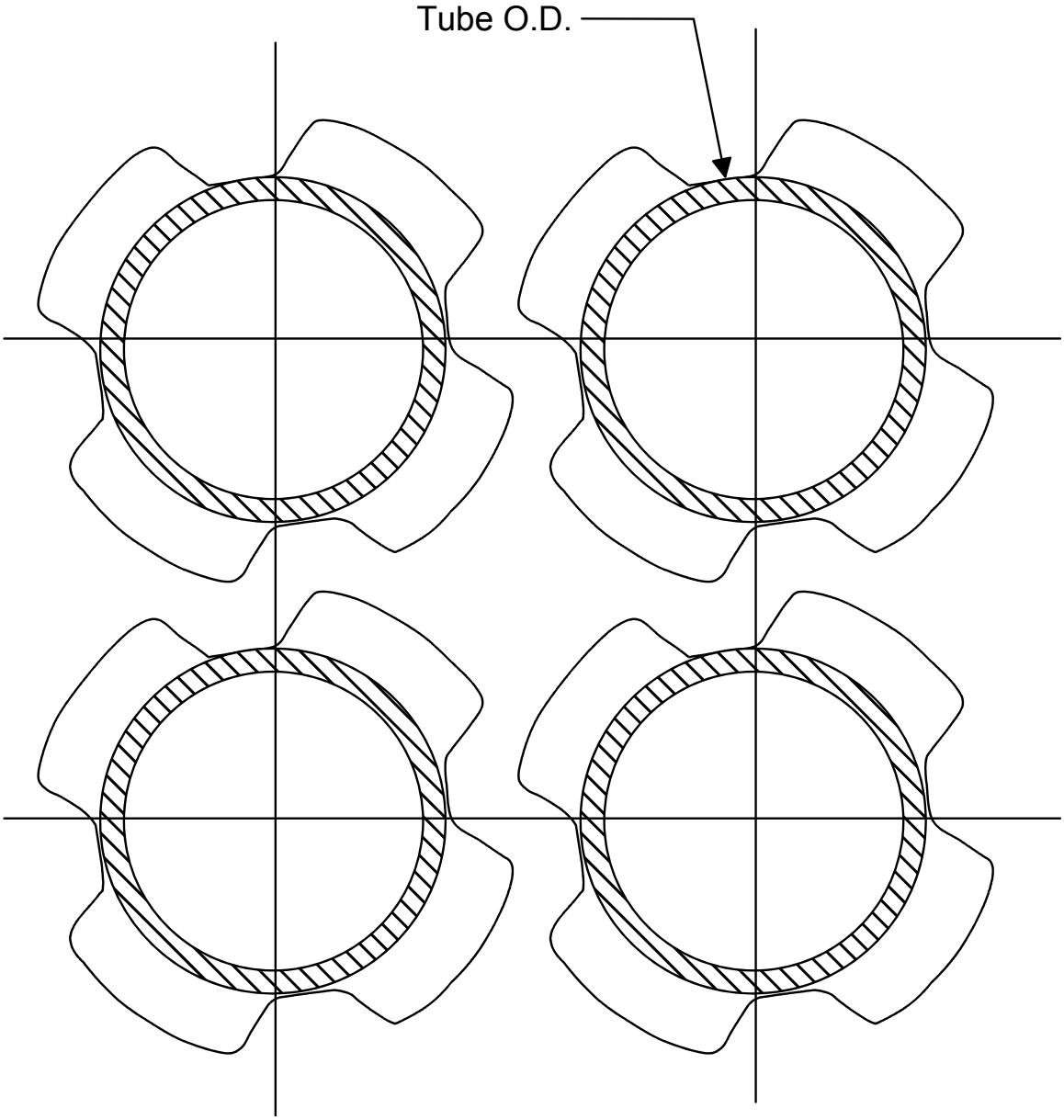

G:\Word\Images_P\UFSAR\543.ds4

SEABROOK STATION UPDATED FINAL SAFETY ANALYSIS REPORT	The Quatrefoil Broached Holes	
		Figure 5.4-3

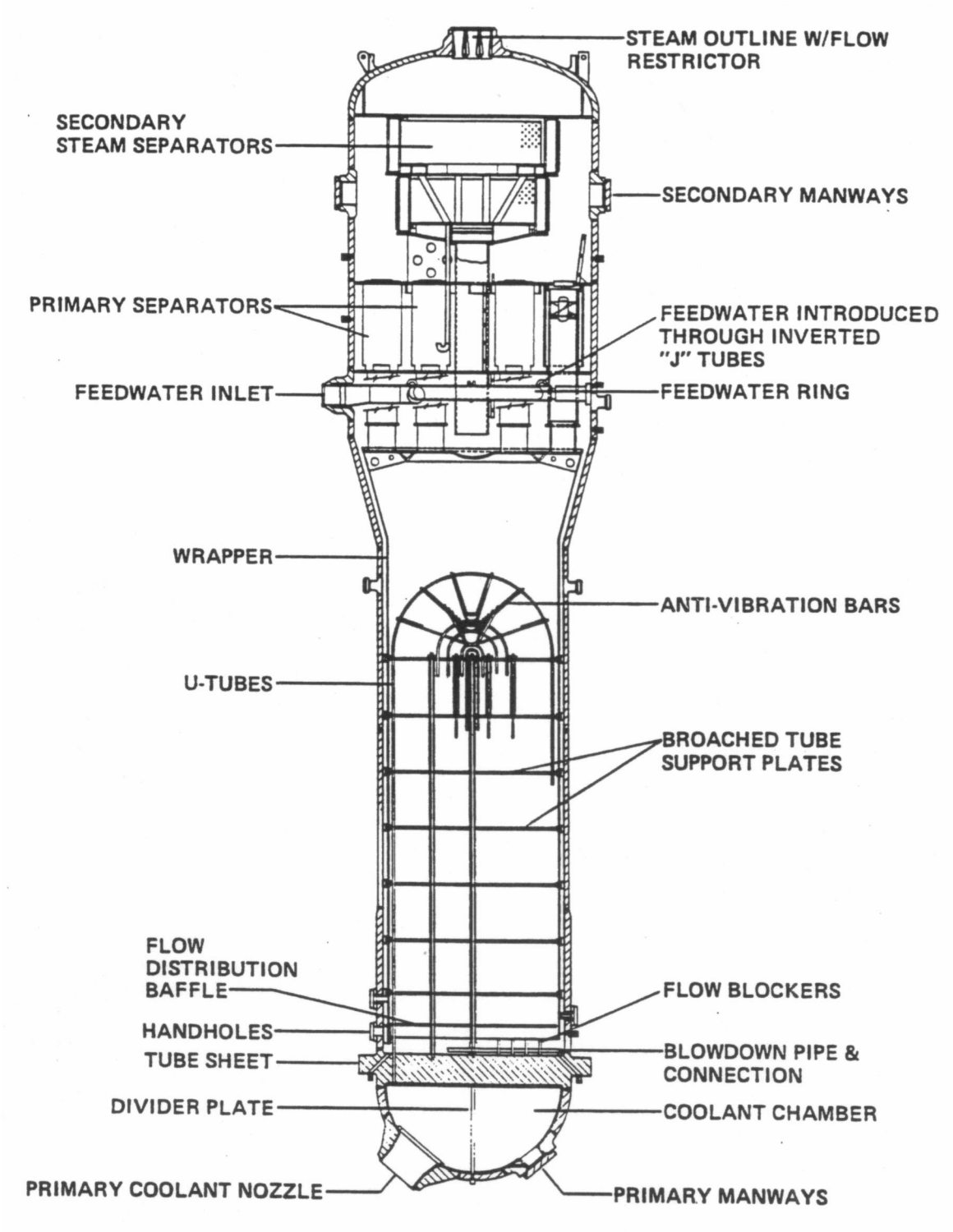

SEABROOK STATION UPDATED FINAL SAFETY ANALYSIS REPORT	Steam Generator	
		Figure 5.4-4

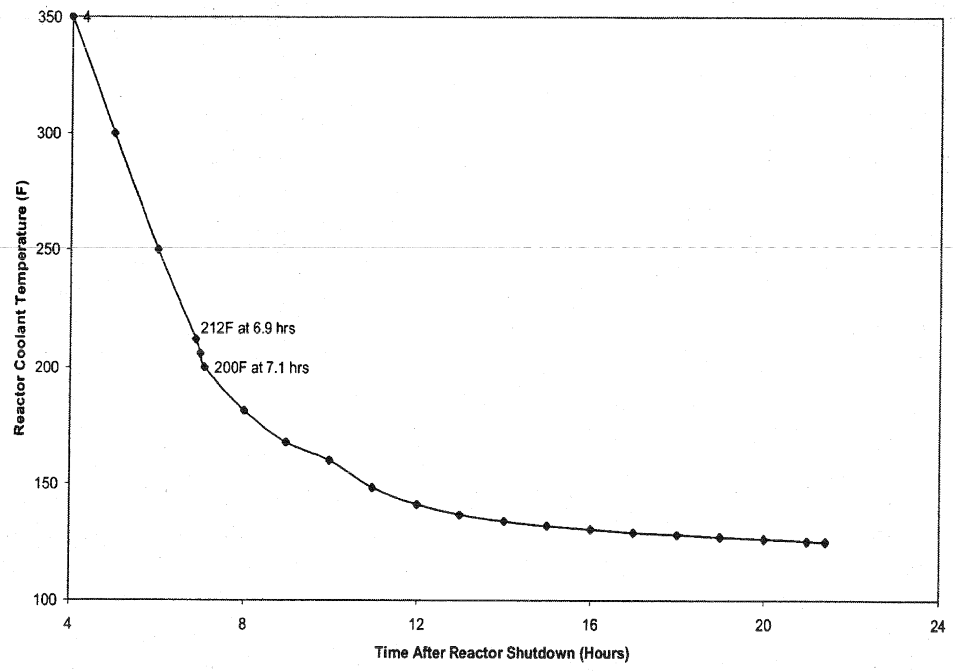

SEABROOK STATION UPDATED FINAL SAFETY ANALYSIS REPORT	Normal RHR Cooldown	
		Figure 5.4-5

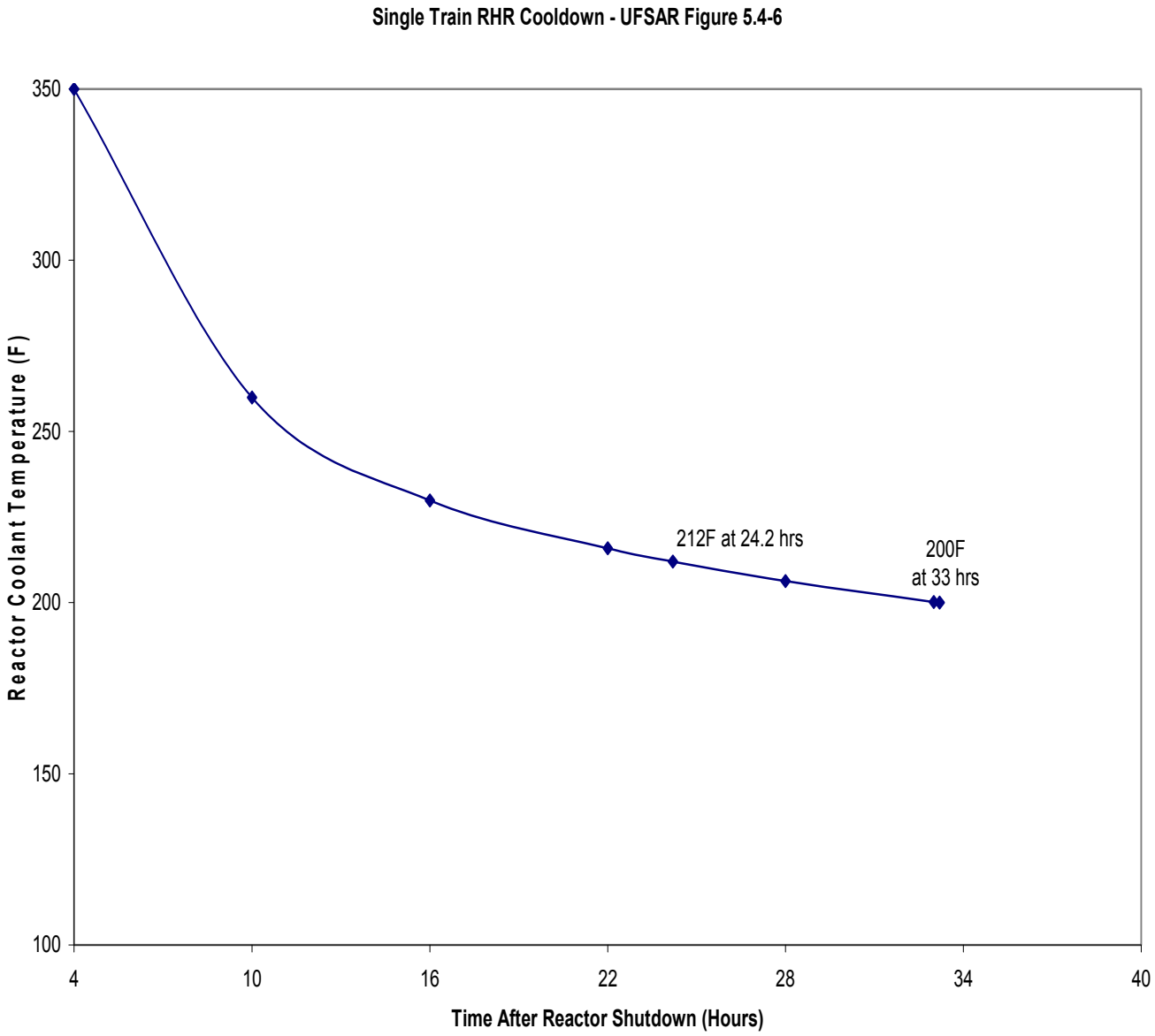

SEABROOK STATION UPDATED FINAL SAFETY ANALYSIS REPORT	Single Train RHR Cooldown	
		Figure 5.4-6

See 1-NHY-503747

See 1-NHY-503748

See 1-NHY-503764

See PID-1-RH-B20660

See PID-1-RH-B20662

SEABROOK STATION UPDATED FINAL SAFETY ANALYSIS REPORT	Residual Heat Removal System Train A Detail	
		Figure 5.4-10

See PID-1-RH-B20663

SEABROOK STATION UPDATED FINAL SAFETY ANALYSIS REPORT	Residual Heat Removal System Train B Cross-Tie Detail	
		Figure 5.4-11

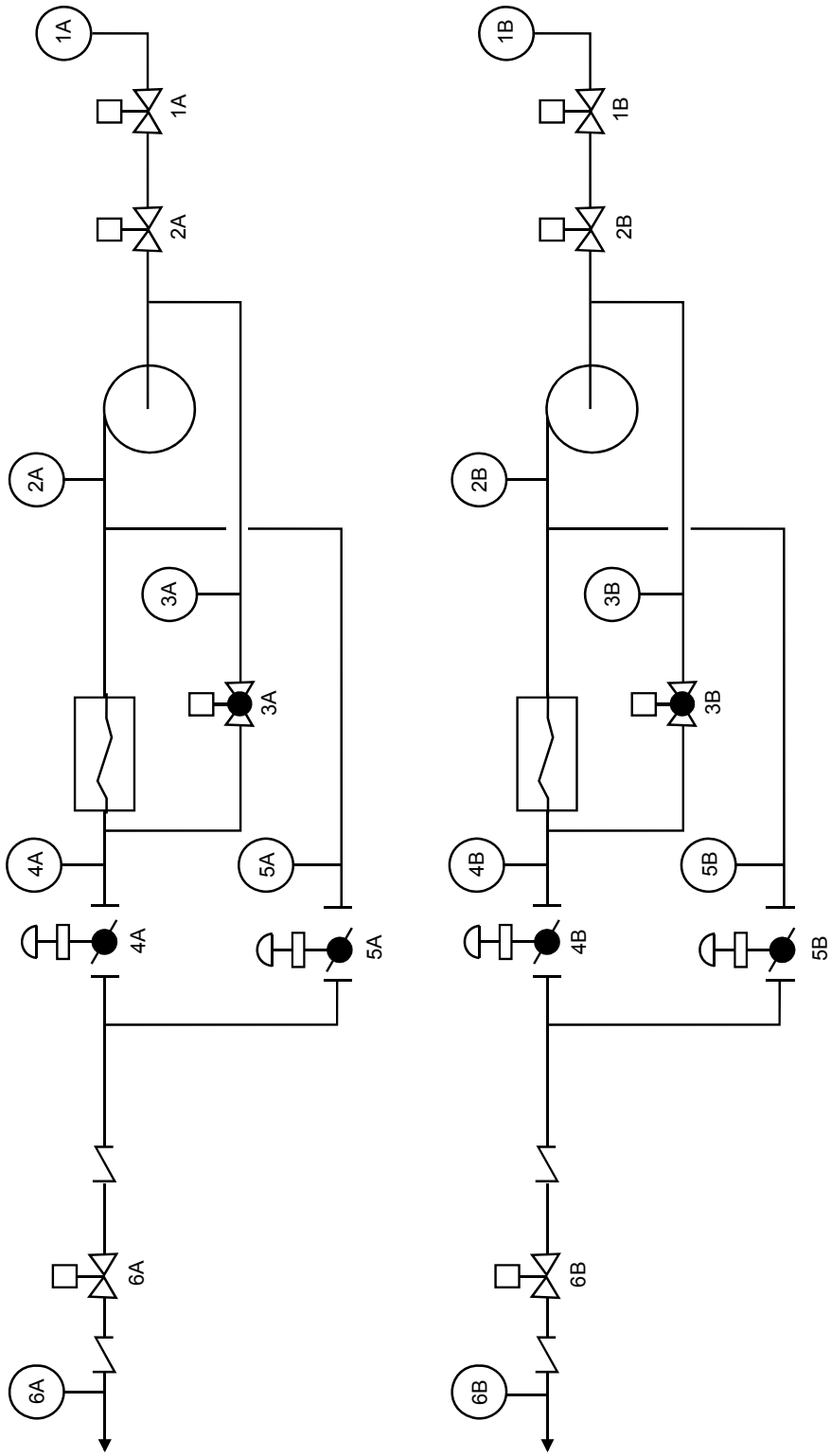

G:\Word\Images_PUFSAR\5412.ds4

SEABROOK STATION UPDATED FINAL SAFETY ANALYSIS REPORT	Residual Heat Removal System Process Flow Diagram	
	Sheet 1 of 3	Figure 5.4-12

NOTES TO FIGURE 5.4-12
(Sheet 1 of 2)

MODES OF OPERATION [1]

1. MODE A, INITIATION OF RHR OPERATION

When the reactor coolant temperature and pressure are reduced to 350°F and 400 psig, approximately four hours after reactor shutdown, the second phase of plant cooldown starts with the RHRS being placed in operation. Before starting the pumps, the inlet isolation valves are opened, the heat exchanger flow control valves are set at minimum flow, and the outlet valves are verified open. The automatic miniflow valves are open and remain so until the pump flow exceeds ~1400 gpm at which time they trip closed. Should the pump flow drop below ~750 gpm, the miniflow valves open automatically.

Startup of the RHRS includes a warn-up period during which time reactor coolant flow through the heat exchangers is limited to minimize thermal shock on the RCS. The rate of heat removal from the reactor coolant is controlled manually by regulating the reactor coolant flow through the residual heat exchangers. The total flow is regulated automatically by control valves in the heat exchanger bypass line to maintain a constant total flow. The cooldown rate is limited to 50°F/hr based on equipment stress limits and a 120°F maximum component cooling water temperature.

2. MODE B, END CONDITIONS OF A NORMAL COOLDOWN

This situation characterizes most of the RHRS operation. As the reactor coolant temperature decreases, the flow through the residual heat exchanger is increased until all of the flow is directed through the heat exchanger to obtain maximum cooling.

VALVE ALIGNMENT CHART

Valve	Operational Mode	
	A	B
1AB	O	O
2AB	O	O
3AB	C	C
4AB	P	O
5AB	P	C
6AB	O	O

O = Open C = Closed P = Partial

(1) For the safeguards functions perfumed by the Residual Heat Removal System, refer to Section 6.3, Emergency Core Cooling System.

NOTES TO FIGURE 5.4-12
(Sheet 2 of 2)

MODE A – BEGINNING OF COOLDOWN

Location	Pressure (psig)	Temperature (°F)	Flow (gpm)	Flow (lb/hr x 10^5)
1A, B	400	350	3000	1.48
2AB	574.5	350	3000	1.48
3A, B	420	350	0	0
4AB	555	147	1320	0.66
5AB	559	350	1780	0.82
6AB	400	260	3000	1.48

MODE B – END OF COOLDOWN

Location	Pressure (psig)	Temperature (°F)	Flow (gpm)	Flow (lb/hr x 10^5)
1AB	0	125	2960	1.48
2AB	161	125	2960	1.48
3AB	20	125	2960	1.48
4AB	117	100	2960	1.48
5AB	146	125	0	0
6AB	0	100	2960	1.48

NOTE:

This table is illustrative of the RHR system performance in the cooldown mode when system flow is maintained at 3000 GPM. Current practice at Seabrook Station is to operate the RHR system at 3500 GPM. System flow rate operating pressure and component differential pressure may vary. Overall system performance in unaffected.

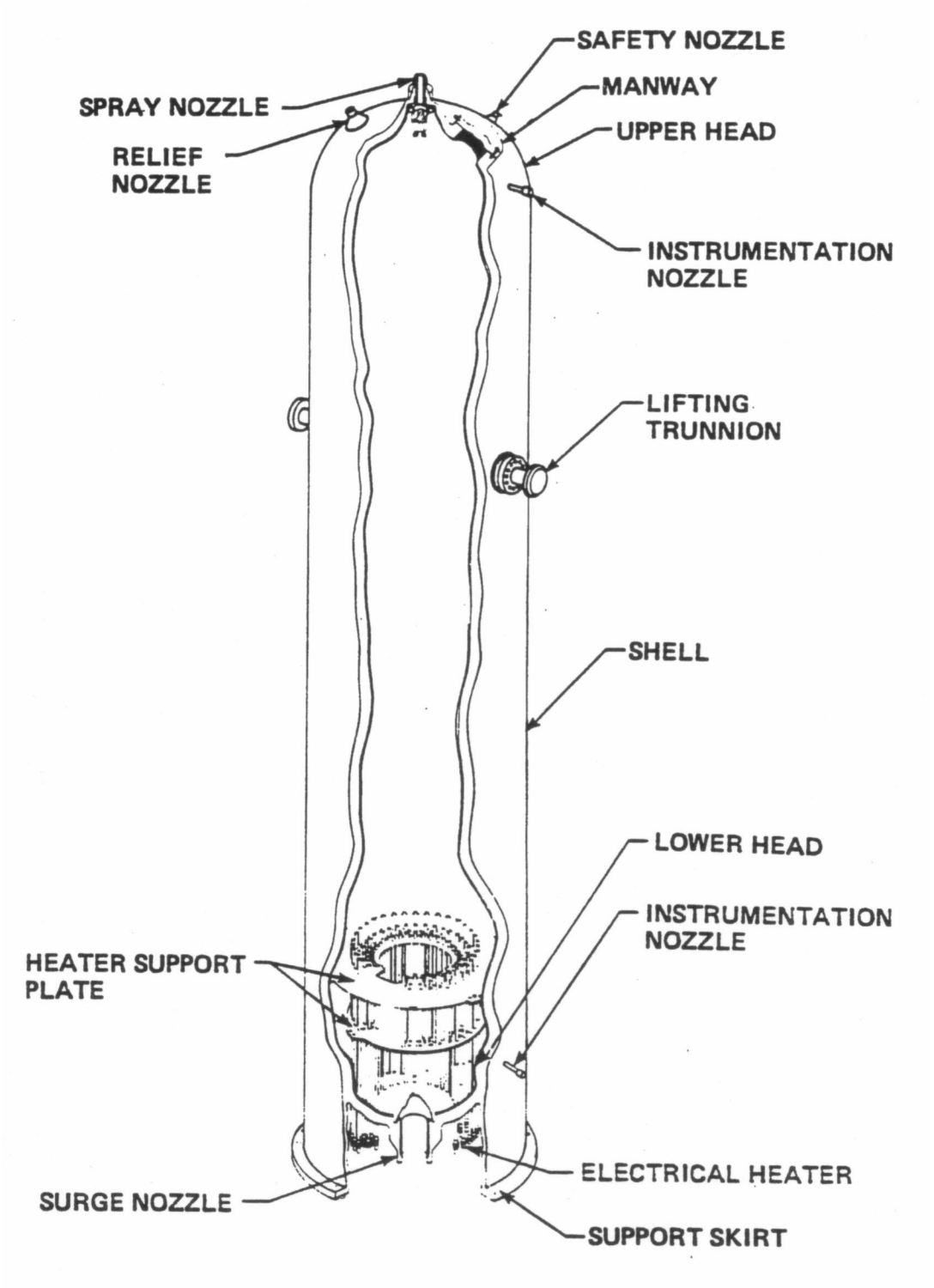

SEABROOK STATION UPDATED FINAL SAFETY ANALYSIS REPORT	Pressurizer	
		Figure 5.4-13

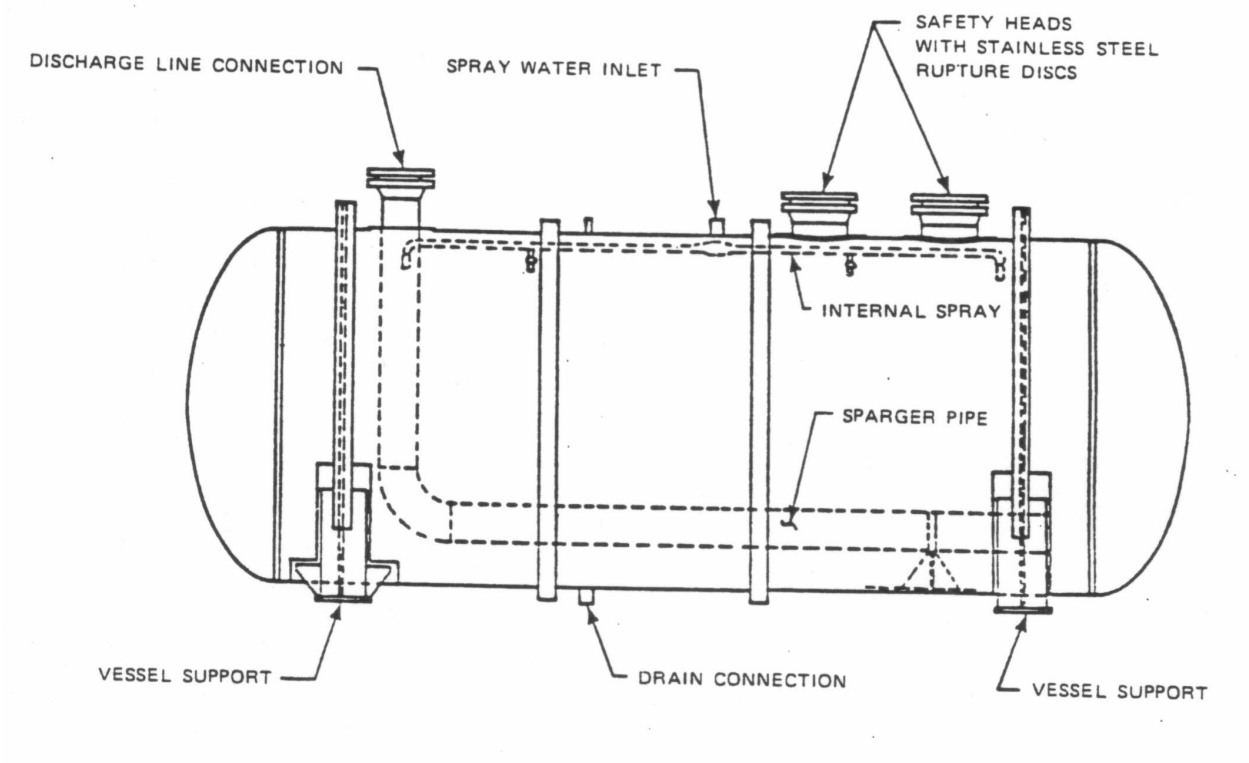

SEABROOK STATION UPDATED FINAL SAFETY ANALYSIS REPORT	Pressurizer Relief Tank	
		Figure 5.4-14

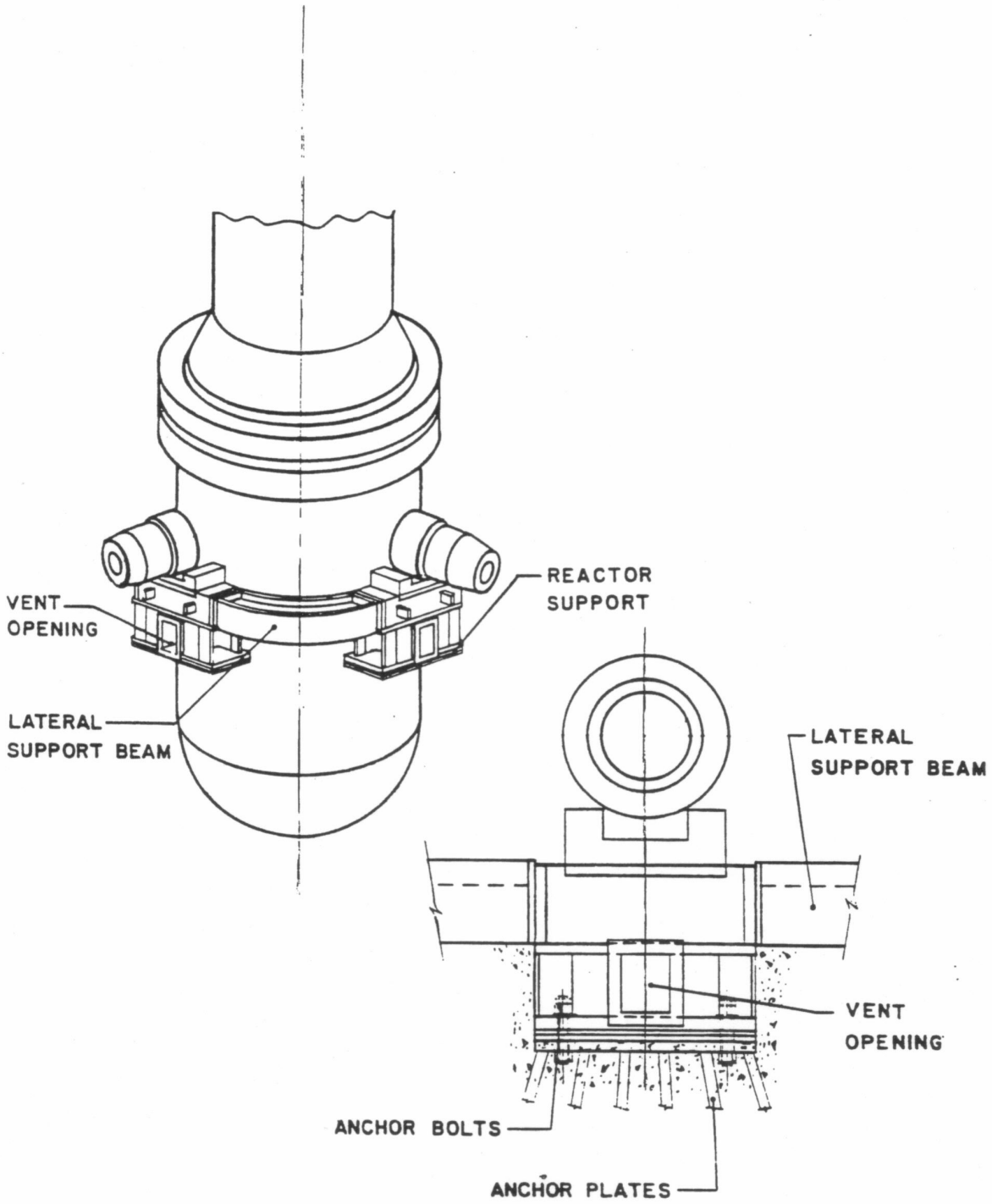

SEABROOK STATION UPDATED FINAL SAFETY ANALYSIS REPORT	Reactor Vessel Supports	
		Figure 5.4-15

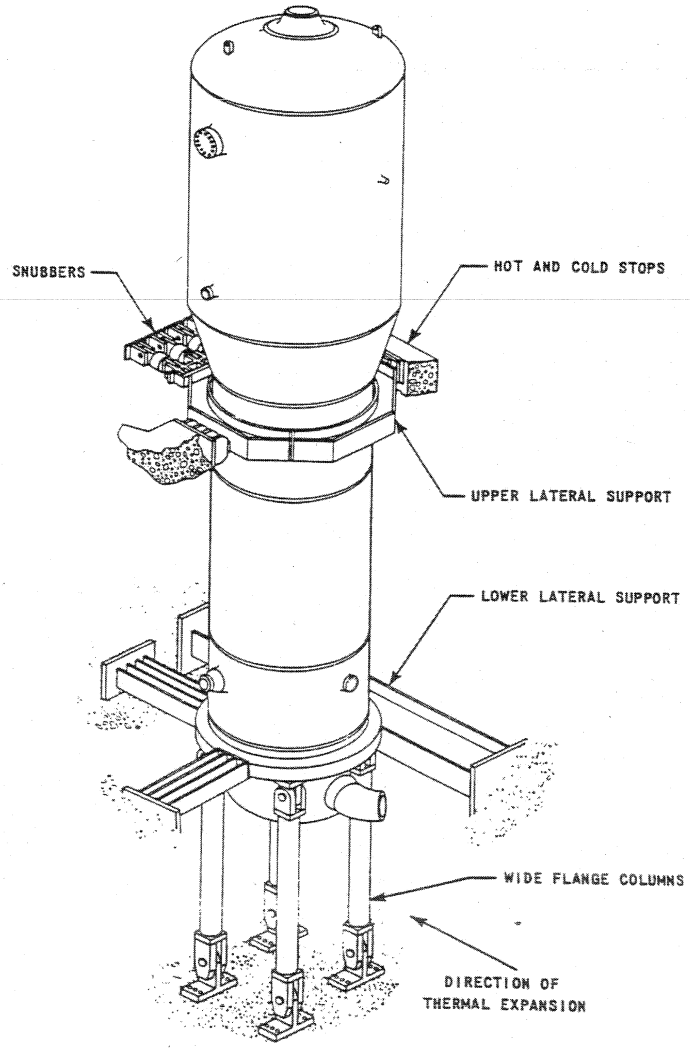

SEABROOK STATION UPDATED FINAL SAFETY ANALYSIS REPORT	Steam Generator Supports	
		Figure 5.4-16

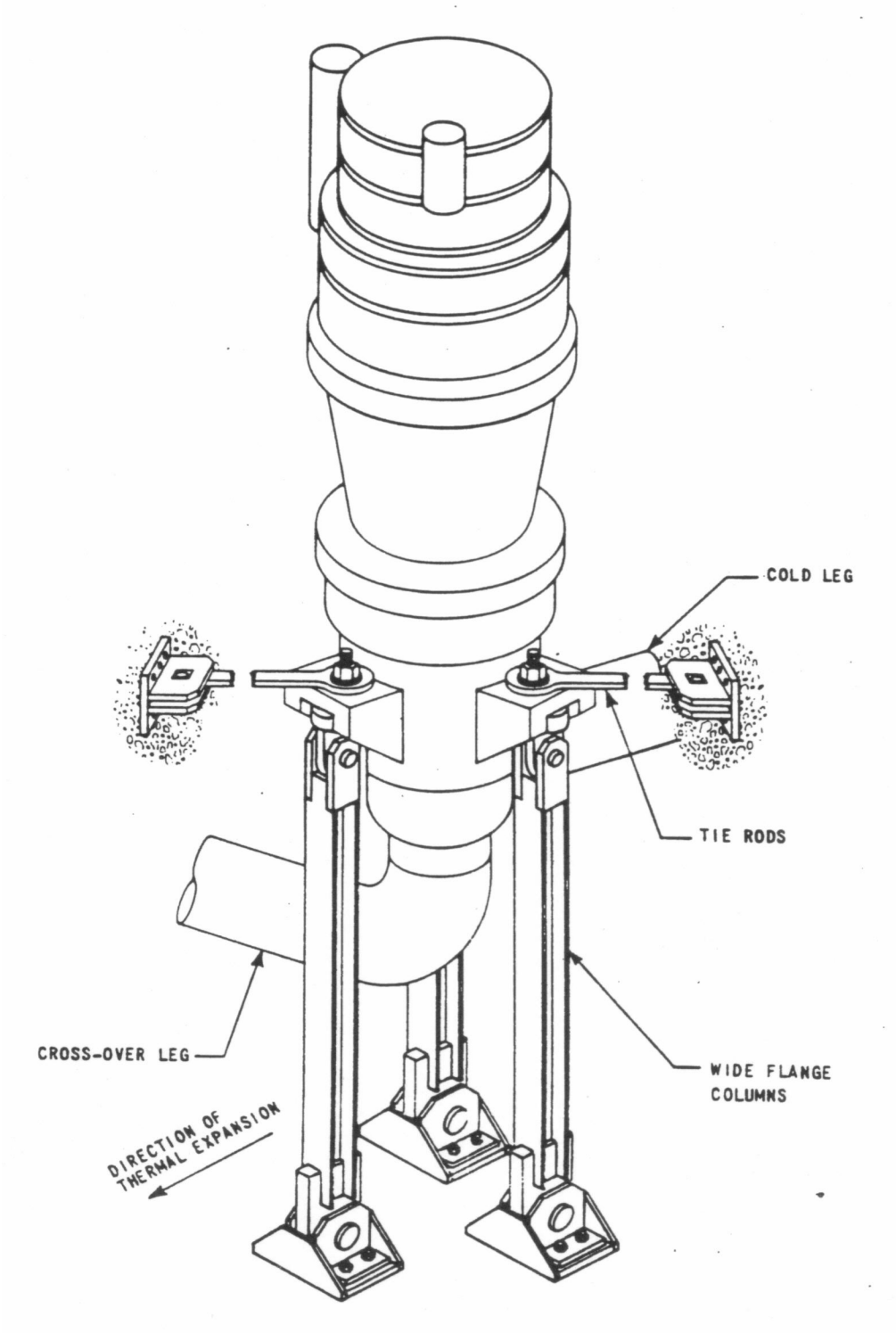

SEABROOK STATION UPDATED FINAL SAFETY ANALYSIS REPORT	Reactor Coolant Pump Supports	
		Figure 5.4-17

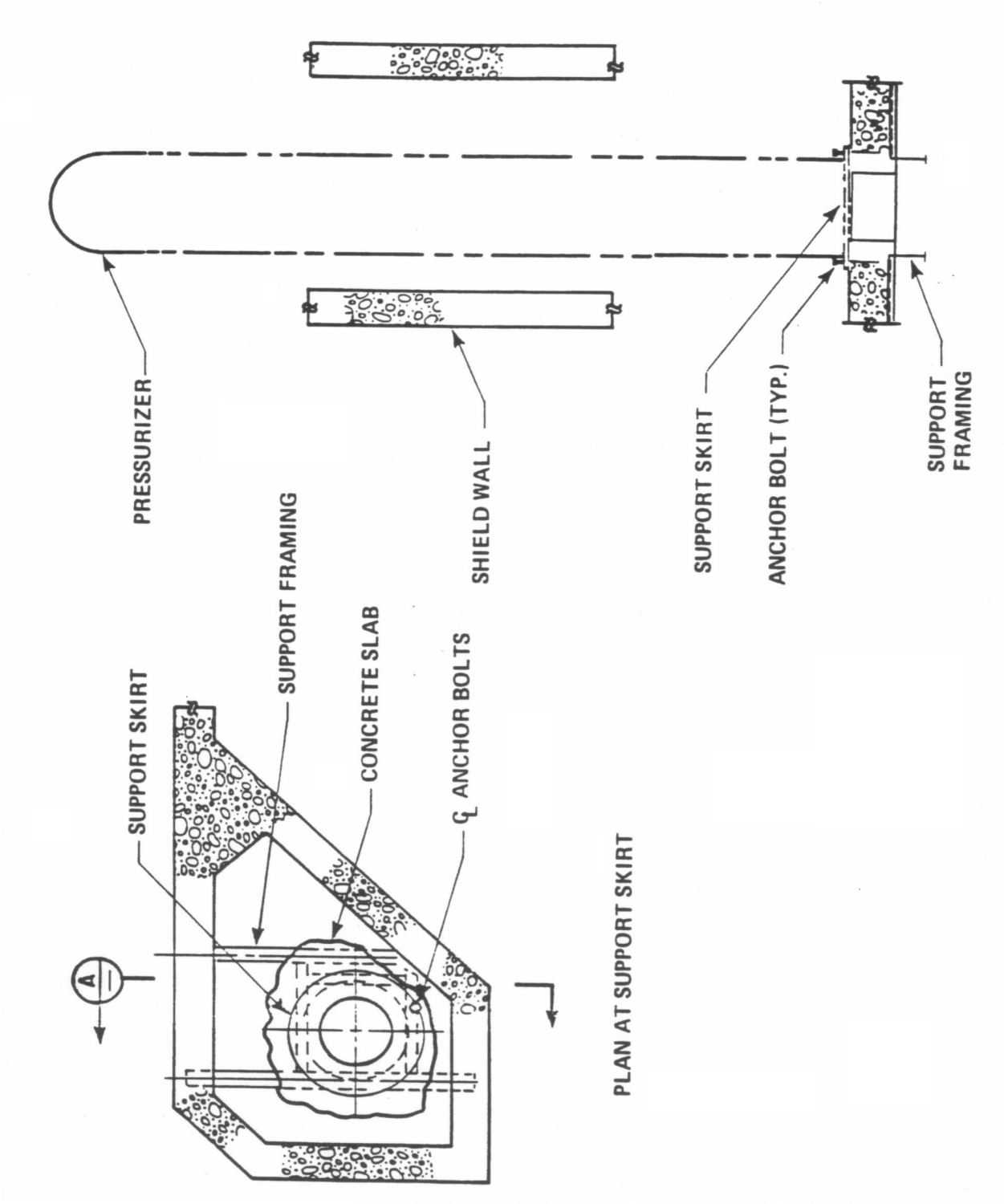

SEABROOK STATION UPDATED FINAL SAFETY ANALYSIS REPORT	Reactor Building Internals Pressurizer Supports	
		Figure 5.4-18

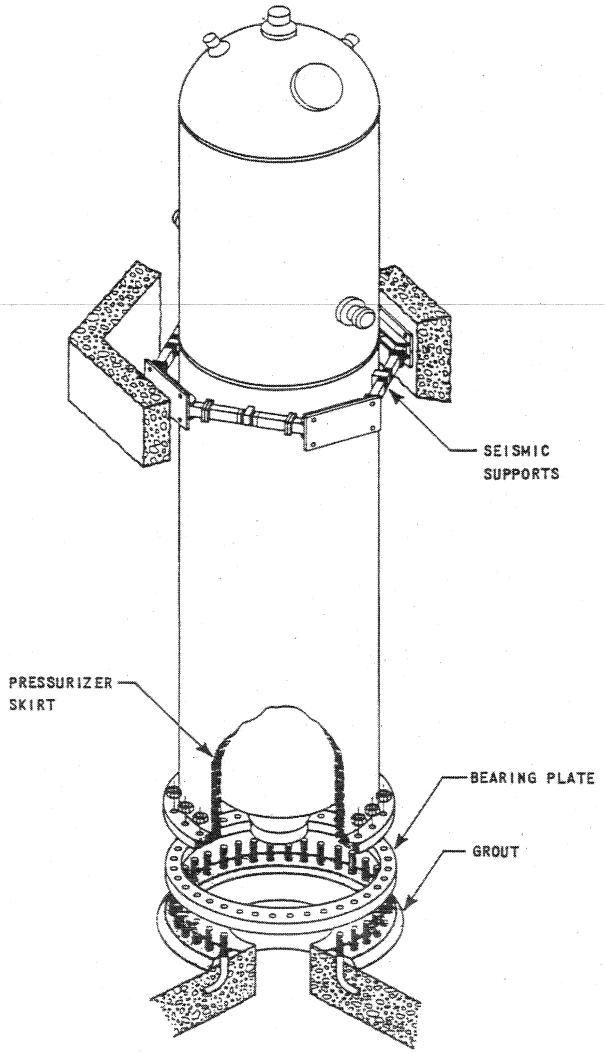

SEABROOK STATION UPDATED FINAL SAFETY ANALYSIS REPORT	Pressurizer Supports	
		Figure 5.4-19