SEABROOK STATION
UPDATED FINAL SAFETY ANALYSIS REPORT

CHAPTER 3
DESIGN OF STRUCTURES, COMPONENTS, EQUIPMENT AND SYSTEMS

FIGURES

3.3-1	Pressure Coefficients Distribution for Cylinders and Spheres
3.3-2	Tornado Size Factor Cs Versus Building Length (L)
3.4-1	Waterproofing Concrete Typical Details
3.5-1	Possible Turbine Missile Trajectory
3.5-2	Coordinate Systems
3.5-3	Plot Plan and Elevation View Showing Effective Target Area
3.5-4	Relationship of Penetration to Scabbing Limit Thickness (Reference 12)
3.5-5	Xm/Xe Curves for Elasto-Plastic System Rectangular Impulse Load (Reference 15)
3.6(B)-1	Main Steam Piping Outside Containment
3.6(B)-2	Feedwater Piping Outside Containment
3.6(B)-3	Containment Penetration (Hot High Energy Lines)
3.6(B)-4	Containment Penetration (Cold High Energy Lines)
3.6(B)-5	RC Line 13 Pipe Whip Restraint Protecting CS, RC and RH Lines and Valves - Containment Zone 438
3.6(B)-6	Pressurizer Surge Line Pipe Whip Restraint Protecting Steam Generator Slowdown and Safety Injection Lines - Containment Zone 458
3.6(B)-7	Pressurizer Surge Line Pipe Whip Restraint Protecting Steam Generator Support, Reactor Coolant and Safety Injection Lines -Containment Zone 448 and 458
3.6(B)-8	RC-58 Pipe Whip Restraint Protecting RC. RH, and SI Lines and Valves Containment Zone 468
3.6(B)-9	Safety Injection Accumulator Line Pipe Whip Restraint Protecting CS, RH and RC Lines and Valves - Containment Zone 4

3.6(B)-10	SI Line Pipe Whip Restraints Protecting RC, RH, and SI Lines and Valves - Containment Zone 448
3.6(B)-11	SI Pipe Whip Restraint Protecting RC and SI Lines and Valves – Containment Zone 458
3.6(B)-12	SI Pipe Whip Restraint Protecting CS, RC RH and SI Lines and Valves - Containment Zone 468
3.6(B)-13	MS & FW Pipe Whip Restraints Protecting MS and RC Lines, Upper Level Taps and CRDM Assembly - Containment Zone 57E
3.6(B)-14	Main Steam Pipe Whip Restraints Protecting SB, CBS Lines, Valves and Containment Liner/Penetrations - Containment Zone 53C
3.6(B)-15	Main Steam Line Axial Pipe Whip Restraints Protecting Containment Penetrations - MS and FW Pipe Chase Zone 13B
3.6(B)-16	Main Steam Pipe Whip Restraints Protecting the Main Steam Isolation Valves and the Containment Penetrations - MS and FW Pipe Chase Zone 148
3.6(B)-17	Break and Thrust Locations Isometric for MS Pipes in West Pipe Chase
3.6(B)-18	Main Steam Pipe Whip Restraints Protecting West Pipe Chase North Wall – MS and FW Pipe Chase Zone 14C
3.6(B)-19	Main Steam Pipe Whip Restraint Protecting Containment Liner and Penetrations - Containment Zone SSD
3.6(B)-20	Main Steam Line Axial Pipe Whip Restraints Protecting Containment Penetrations - MS and FW Pipe Chase Zone 16B
3.6(B)-21	Main Steam Pipe Whip Restraints Protecting the Main Steam Isolation Valves and Containment Penetrations - MS and FW Pipe Chase Zone 17B
3.6(B)-22	Break and Thrust Locations Isometric forMS Pipes in East Pipe Chase
3.6(B)-23	Main Steam Pipe Whip Restraints Protecting West Pipe Chase North Wall- MS and FW. Pipe Chase Zone 17C
3.6(B)-24	Main Steam and Feedwater Pipe Whip Restraints Protecting East Wall of Control Building and Electrical Chase - MS and FW Pipe Chase Zone 15B
3.6(B)-25	Feedwater Pipe Whip Restraint Protecting the Containment Liner and Penetrations and CC & SB Lines and Valves - Containment Zone 53C
3.6(B)-26	Feedwater Pipe Whip Restraints Protecting Containment Liner and Penetrations - MS and FW Pipe Chase Zone 13A
3.6(B)-27	Break and Thrust Locations Isometric for FW Pipes in West Pipe Chase

3.6(B)-28	Feedwater Pipe Whip Restraints Protecting Containment Liner and Penetrations - MS and FW Pipe Chase Zone 14A
3.6(B)-29	Feedwater Pipe Whip Restraints Protecting Containment Liner and Penetrations - Containment Zone SSC
3.6(B)-30	Feedwater Pipe Whip Restraints Protecting Containment Liner and Penetrations - Containment Zone 16A
3.6(B)-31	Break and Thrust Locations Isometric for FW Pipes in East Chase
3.6(B)-32	Feedwater Pipe Whip Restraints Protecting Containment Liner and Penetrations -Containment Zone 17A
3.6(B)-33	Pipe Bridge West Main Steam and Feedwater Pipe Whip Restraints Protecting Turbine and Control Buildings
3.6(B)-34	Pipe Bridge East Main Steam and Feedwater Pipe Whip Restraints Protecting Turbine Building and Condensate Storage Tank
3.6(N)-1	Loss of Reactor Coolant Accident Boundary Limits
3.6(N)-2	Reactor Coolant System, Pipe Break and Whip Restraint Locations
3.7(B)-1	Time History Accelogram (0.25g), Horizontal Component 1 - SSE
3.7(B)-2	Time History Accelogram (0.25g), Horizontal Component 2 - SSE
3.7(B)-3	Time History Accelogram (0.25g), Vertical Component - SSE
3.7(B)-4	0.50% Critical Damping Ground Response Spectrum, Horizontal Component 1.,. SSE
3.7(B)-5	1% Critical Damping Ground Response Spectrum, Horizontal Component 1- SSE
3.7(B)-6	2% Critical Damping Ground Response Spectrum, Horizontal Component 1- SSE
3.7(B)-7	5% Critical Damping Ground Response Spectrum, Horizontal Component 1- SSE
3.7(B)-8	7% Critical Damping Ground Response Spectrum, Horizontal Component 1 - SSE
3.7(B)-9	10% Critical Damping Ground Response Spectrum, Horizontal Component 1 - SSE
3.7(B)-10	0.5% Critical Damping Ground Response Spectrum, Horizontal Component 2 - SSE
3.7(B)-11	1% Critical Damping Ground Response Spectrum, Horizontal Component 2 - SSE
3.7(B)-12	2% Critical Damping Ground Response Spectrum, Horizontal Component 2 - SSE

3.7(B)-13	5% Critical Damping Ground Response Spectrum, Horizontal Component 2 - SSE
3.7(B)-14	7% Critical Damping Ground Response Spectrum, Horizontal Component 2 - SSE
3.7(B)-15	10% Critical Damping Ground Response Spectrum, Horizontal Component 2 - SSE
3.7(B)-16	1% Critical Damping Ground Response Spectrum, Vertical Component - SSE
3.7(B)-17	2% Critical Damping Ground Response Spectrum, Vertical Component - SSE
3.7(B)-18	5% Critical Damping Ground Response Spectrum, Vertical Component - SSE
3.7(B)-19	7% Critical Damping Ground Response Spectrum, Vertical Component - SSE
3.7(B)-20	10% Critical Damping Ground Response Spectrum, Vertical Component - SSE
3.7(B)-21	Containment Shell- Seismic Model
3.7(B)-22	Containment Internals- Mathematical Model
3.7(B)-23	Primary Auxiliary Building Seismic Analysis- Mathematical Model
3.7(B)-24	Control/Diesel Generator Building Seismic Analysis - Mathematical Model
3.7(B)-25	Fuel Storage Building Seismic Analysis - Mathematical Model
3.7(B)-26	Amplified Response Spectra- SSE- Containment Shell- 7% Structural Damping; 2% Equipment Damping
3.7(B)-27	Amplified Response Spectra- SSE- Primary Auxiliary Building -7% Structural Damping; 2% Equipment Damping
3.7(B)-28	Amplified Response Spectra - SSE - Control/Diesel Generator Building - 7% Structural Damping; 2% Equipment Damping
3.7(B)-29	Amplified Response Spectra- SSE- Fuel Storage Building - 7% Structural Damping; 2% Equipment Damping
3.7(B)-30	Typical Ceiling to Floor Supported Cable Tray System
3.7(B)-31	Mathematical Model of Typical Ceiling to Floor Supported Cable Tray System
3.7(B)-32	Mounting Detail of Triaxial Time History Accelerograph, XT 6700, in East Air Intake Structure
3.7(B)-33	Mounting Detail of Triaxial Peak Accelerograph, XR-6703, on Safety Injection Piping (Line 203)

3.7(B)-34	Mounting Detail of Triaxial Peak Accelerograph, XR-6704, on PCCW Piping
3.7(B)-35	Primary Auxiliary Building Amplified Response Spectra (Vertical) OBE, 4% Damping
3.7(B)-36	Primary Auxiliary Building Amplified Response Spectra (Vertical) OBE, 1% Damping
3.7(B)-37	Typical Pipe Support Systems
3.7(B)-38	Alternative to Regulatory Guide 1.61 Damping Values
3.7(N)-1	Multi-Degree of Freedom System
3.8-1	Containment Structure Mat Reinforcing
3.8-2	Containment Structure Typical Reinforcing
3.8-3	Containment Structure Equipment Hatch Typical Reinforcing
3.8-4	Containment Structure Personnel Air Lock Typical Reinforcing
3.8-5	Containment Structure Liner Details
3.8-6	Containment Structure Reinforcing at Penetrations
3.8-7	Containment Structure Dome Reinforcing
3.8-8	Design Temperature Gradient through Containment Wall
3.8-9	Containment Pressure Transients Following a LOCA
3.8-10	Containment Cylinder Liner Temperature Transients Curve
3.8-11	Containment Dome Liner Temperature Transients Curve
3.8-12	Axisymetric Modeling Elements
3.8-13	Reinforced Concrete Idealization
3.8-14	Boundary Conditions for Equipment Hatch Analysis - Model Sketch
3.8-15	Shell Section Illustrating Computed Force and Moment Resultants
3.8-16	Containment Axisymetric Model
3.8-17	Three-Dimensional Finite Element Model for Equipment Hatch Analysis
3.8-18	Layered Cross Section Model for MARC-CDC Element 22
3.8-19	Finite Element Model of Containment Mat
3.8-20	Containment Structure Personnel Airlock
3.8-21	Containment Structure Equipment Hatch with Personnel Airlock
3.8-22	Typical High Energy Piping Penetration
3.8-23	Typical Moderate Energy Piping Penetration

3.8-24	Typical Electrical Penetration
3.8-25	Fuel Transfer Tube Arrangement
3.8-26	Typical Ventilation Penetration
3.8-27	Electrical Penetration Seal Temperature Response Following 0.84 ft2 Split Rupture at 75% Power
3.8-28	Reactor Vessel Lateral Support
3.8-29	Primary Shield Wall Main Reinforcement and Anchorage System
3.8-30	Design of Kick-Back Plate, Clamp Plate, Base Plate and Anchor Bolts for Polar Crane
3.8-31	Control Room Makeup Air Intake Structure East and West
3.8-32	Enclosure for Condensate Storage Tank
3.8-33	Pipe Tunnels (Typical)
3.8-34	Safety-Related Electrical Duct Banks- Typical Cross Section
3.8-35	Typical Safety-Related Electrical Manholes
3.8-36	Typical Reinforcing Detail at Base Slab and Wall
3.8-37	Service Water Pipe Access Vault Concrete Plan & Sections Precast Roof Option
3.9(N)-1	Reactor Coolant Loop Support System, Dynamic Structural Model
3.9(N)-2	Through-Wall Thermal Gradients
3.9(N)-3	Control Rod Drive Mechanism
3.9(N)-4	Control Rod Drive Mechanism Schematic
3.9(N)-5	Nominal Latch Clearance at Minimum and Maximum Temperature
3.9(N)-6	Control Rod Drive Mechanism Latch Clearance Thermal Effect
3.9(N)-7	Lower Core Support Assembly (Core Barrel Assembly)
3.9(N)-8	Upper Core Support Structure
3.9(N)-9	Plan View of Upper Core Support Structure
3.11-1	Service Environment Chart
3A-1	Composite Piping Zones (Nuclear) Key Plan
3A-2	Turbine Building Zone Key Plan Piping
3A-3	Auxiliary Building Zone Key Plan Piping

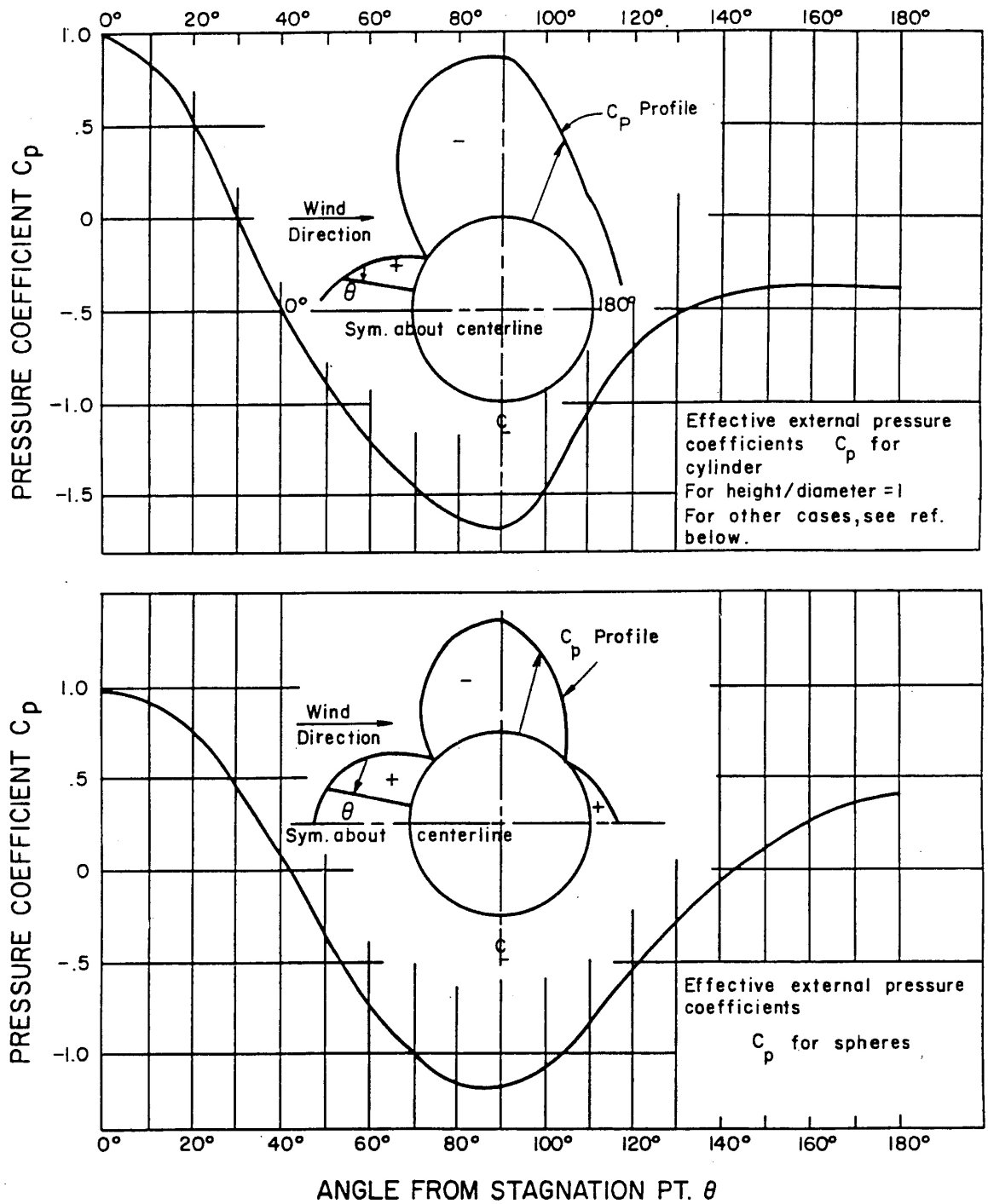

SEABROOK STATION UPDATED FINAL SAFETY ANALYSIS REPORT	Pressure Coefficients Distribution for Cylinders and Spheres	
		Figure 3.3-1

Size Factor C_S = Average Pressure/Max. Tornado Pressure

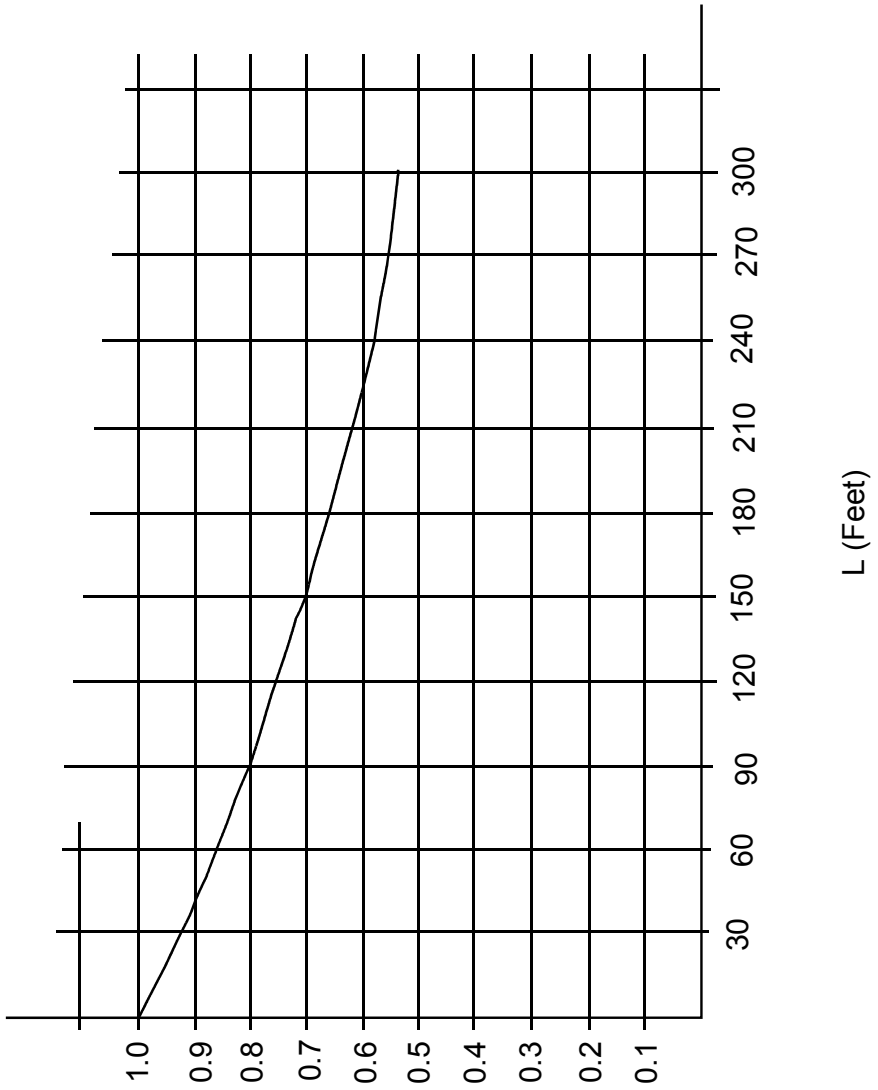

Size Factor C_S = Average Pressure/Max. Tornado Pressure

G:\Images_P\UFSAR\332.ds4

SEABROOK STATION UPDATED FINAL SAFETY ANALYSIS REPORT	Tornado Size Factor C_s Versus Building Length (L)	
		Figure 3.3-2

See 805067

See 202117

SEABROOK STATION UPDATED FINAL SAFETY ANALYSIS REPORT	Turbine Building Zone Key Plan Piping	
		Figure 3A-2

See 202118

See 101696

SEABROOK STATION UPDATED FINAL SAFETY ANALYSIS REPORT	Waterproofing Concrete Typical Details	
		Figure 3.4-1

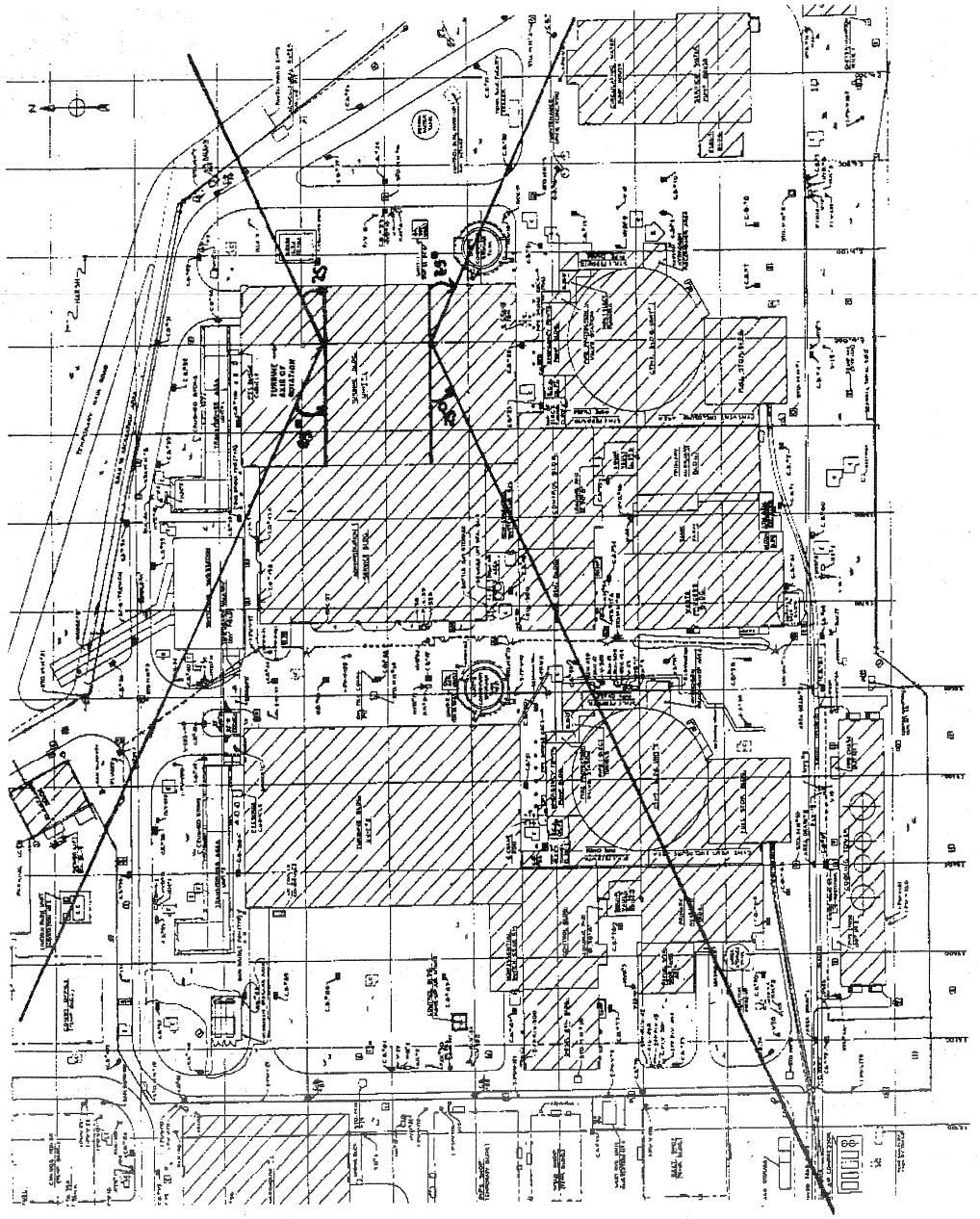

SEABROOK STATION UPDATED FINAL SAFETY ANALYSIS REPORT	Possible Turbine Missile Trajectory	
		Figure 3.5-1

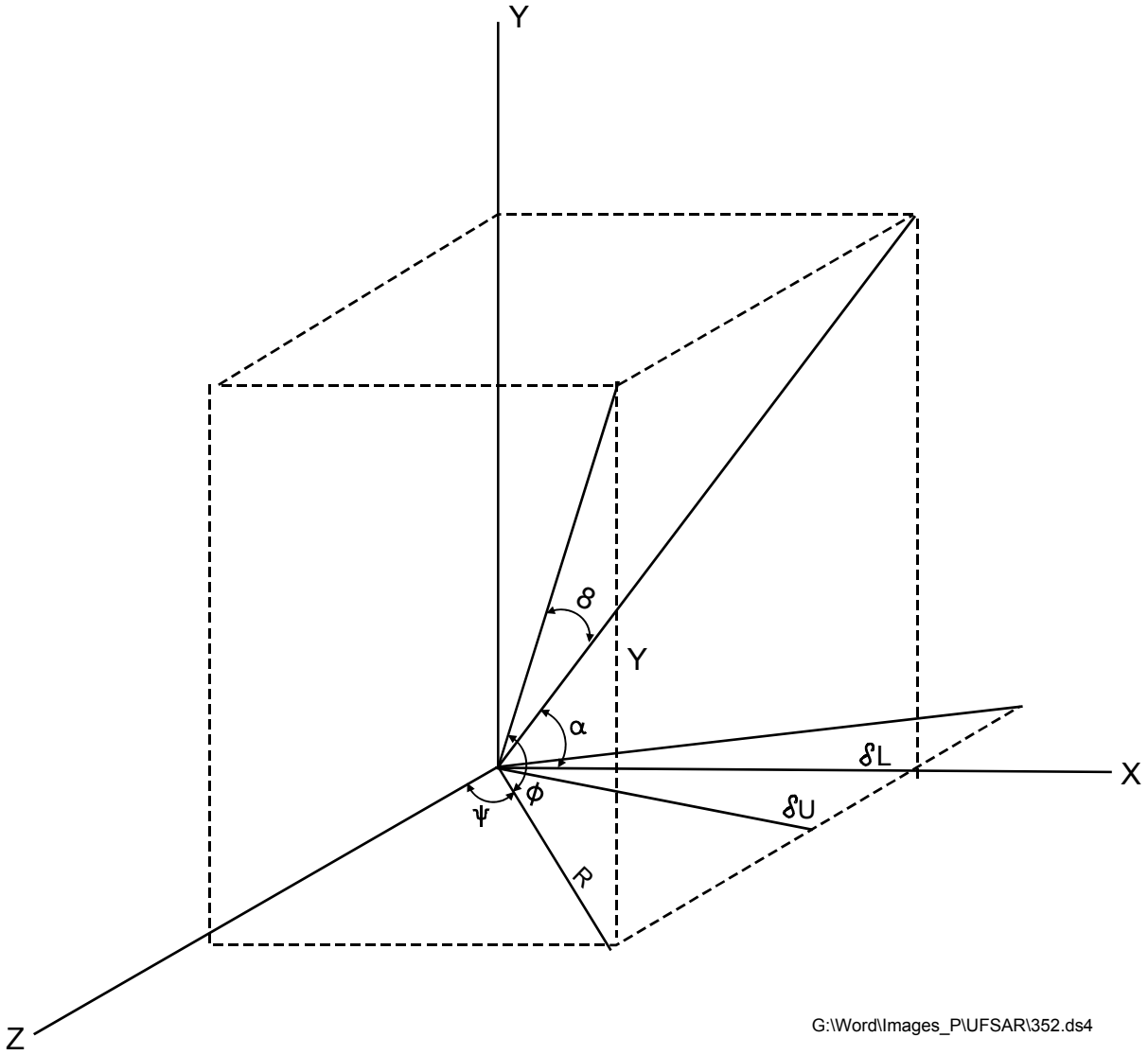

SEABROOK STATION UPDATED FINAL SAFETY ANALYSIS REPORT	Coordinate Systems	
		Figure 3.5-2

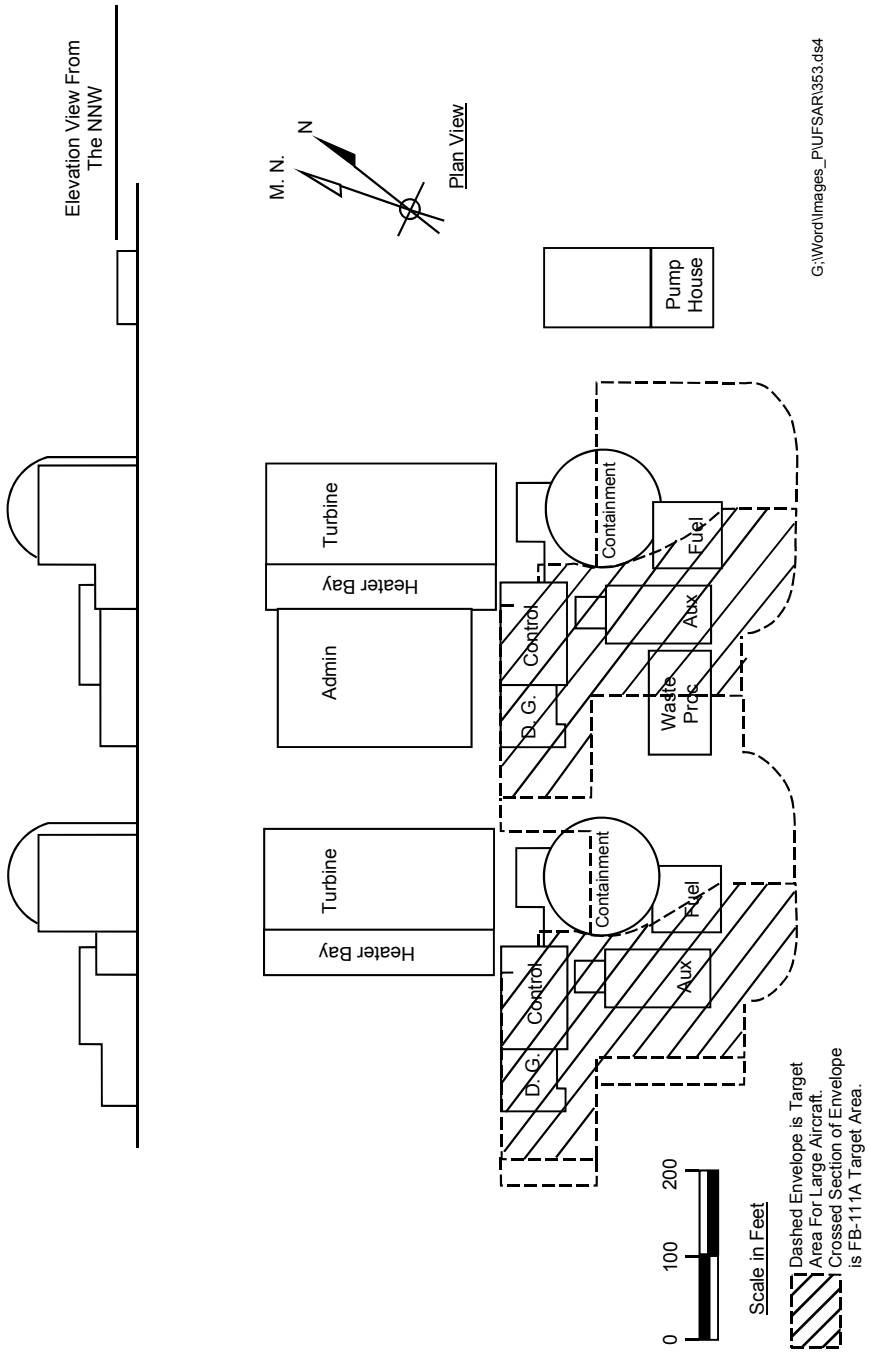

SEABROOK STATION UPDATED FINAL SAFETY ANALYSIS REPORT	Plot Plan and Elevation View Showing Effective Target Area	
		Figure 3.5-3

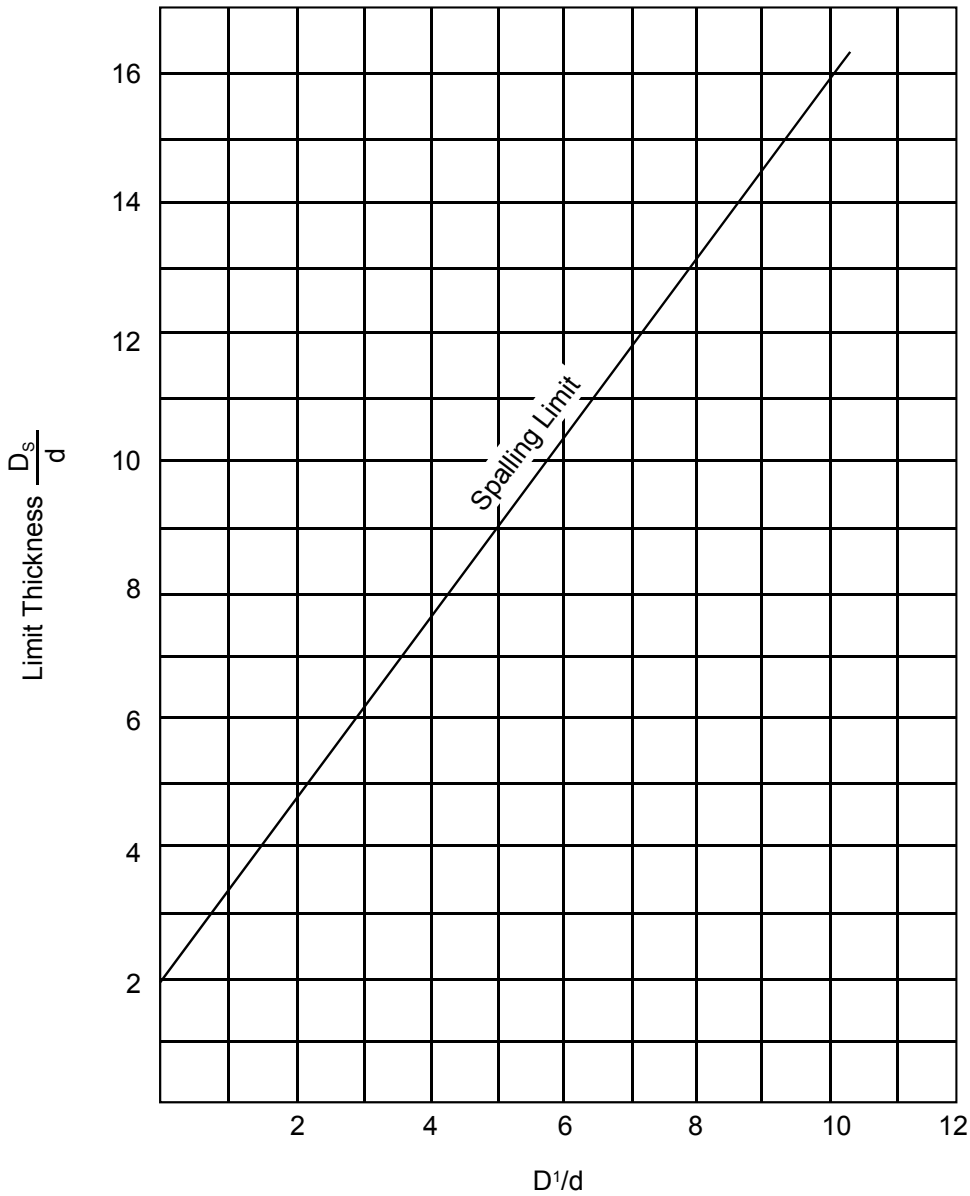

D^1 = Penetration
d = Diameter of Missle
D_S = Thickness required to Prevent Spalling

G:\Images_P\UFSAR\354.ds4

SEABROOK STATION UPDATED FINAL SAFETY ANALYSIS REPORT	Relationship of Penetration to Scabbing Limit Thickness (Reference 12)	
		Figure 3.5-4

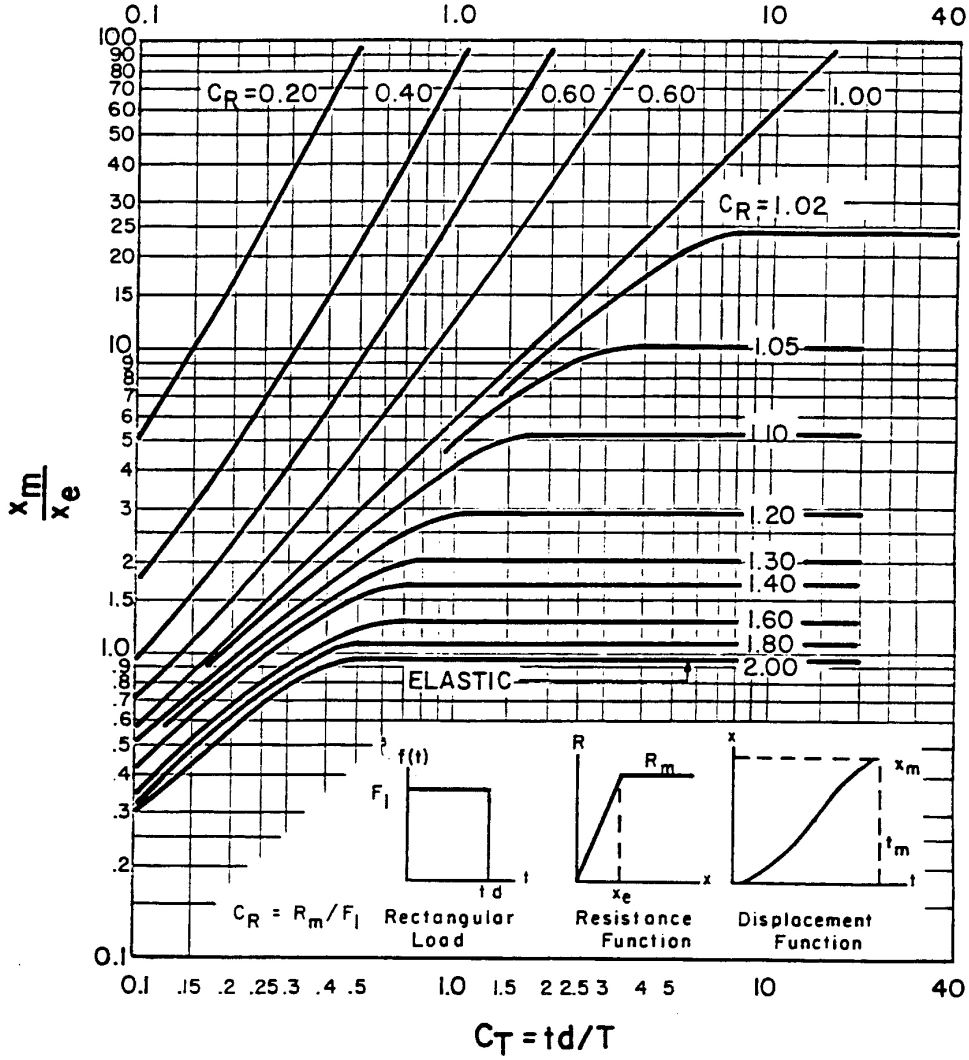

SEABROOK STATION UPDATED FINAL SAFETY ANALYSIS REPORT	X_m/X_e Curves for Elasto-Plastic System Rectangular Impulse Load (Reference 15)	
		Figure 3.5-5

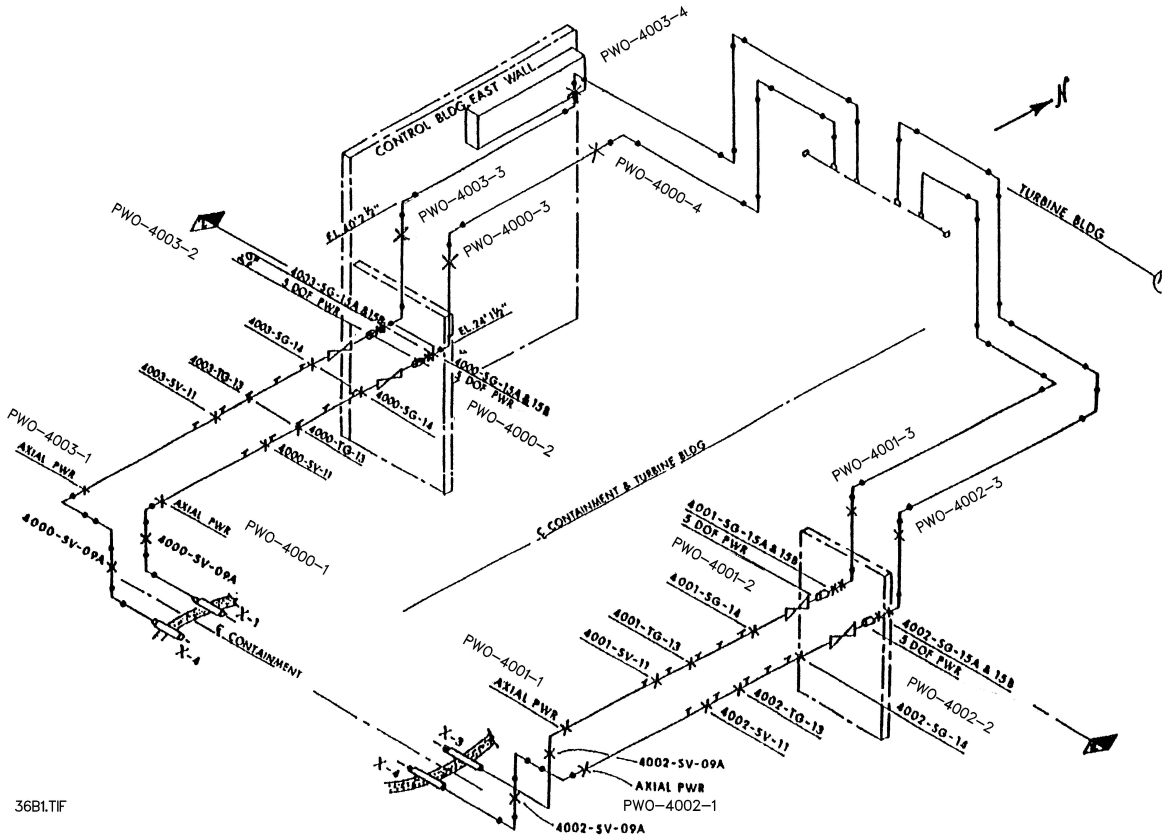

SEABROOK STATION UPDATED FINAL SAFETY ANALYSIS REPORT	Main Steam Piping Outside Containment	
		Figure 3.6(B)-1

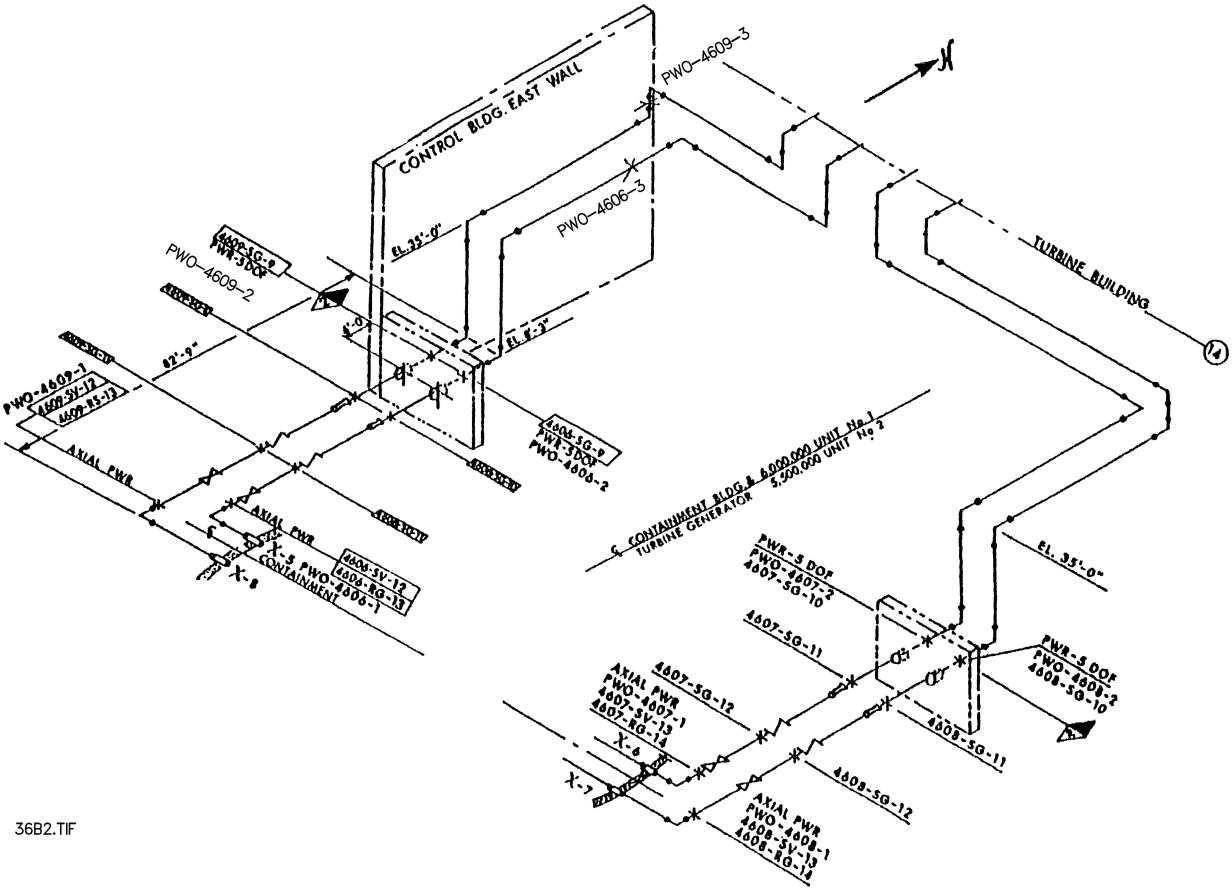

SEABROOK STATION UPDATED FINAL SAFETY ANALYSIS REPORT	Feedwater Piping Outside Containment	
		Figure 3.6(B)-2

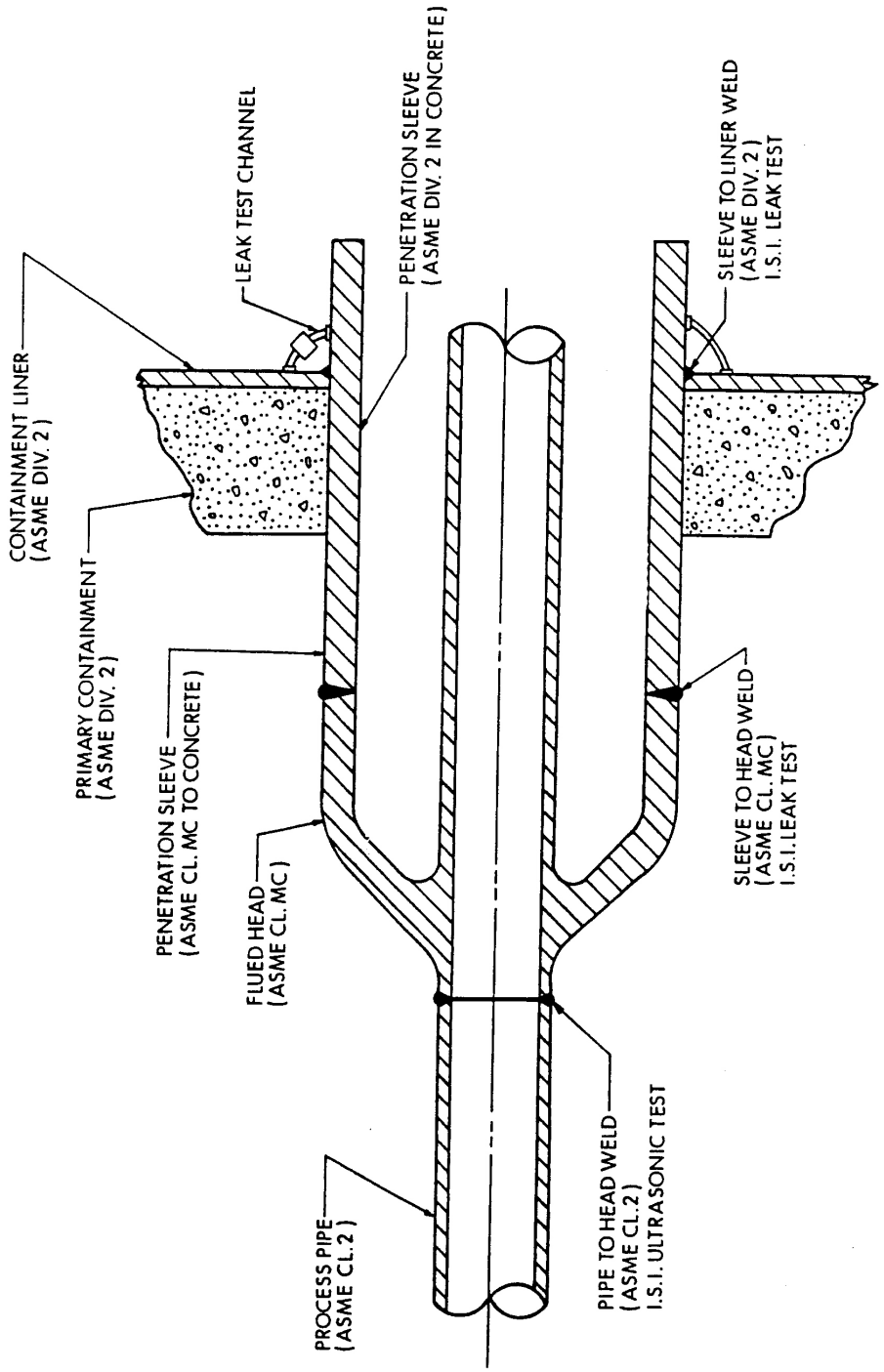

SEABROOK STATION UPDATED FINAL SAFETY ANALYSIS REPORT	Containment Penetration (Hot High Energy Lines)	
		Figure 3.6(B)-3

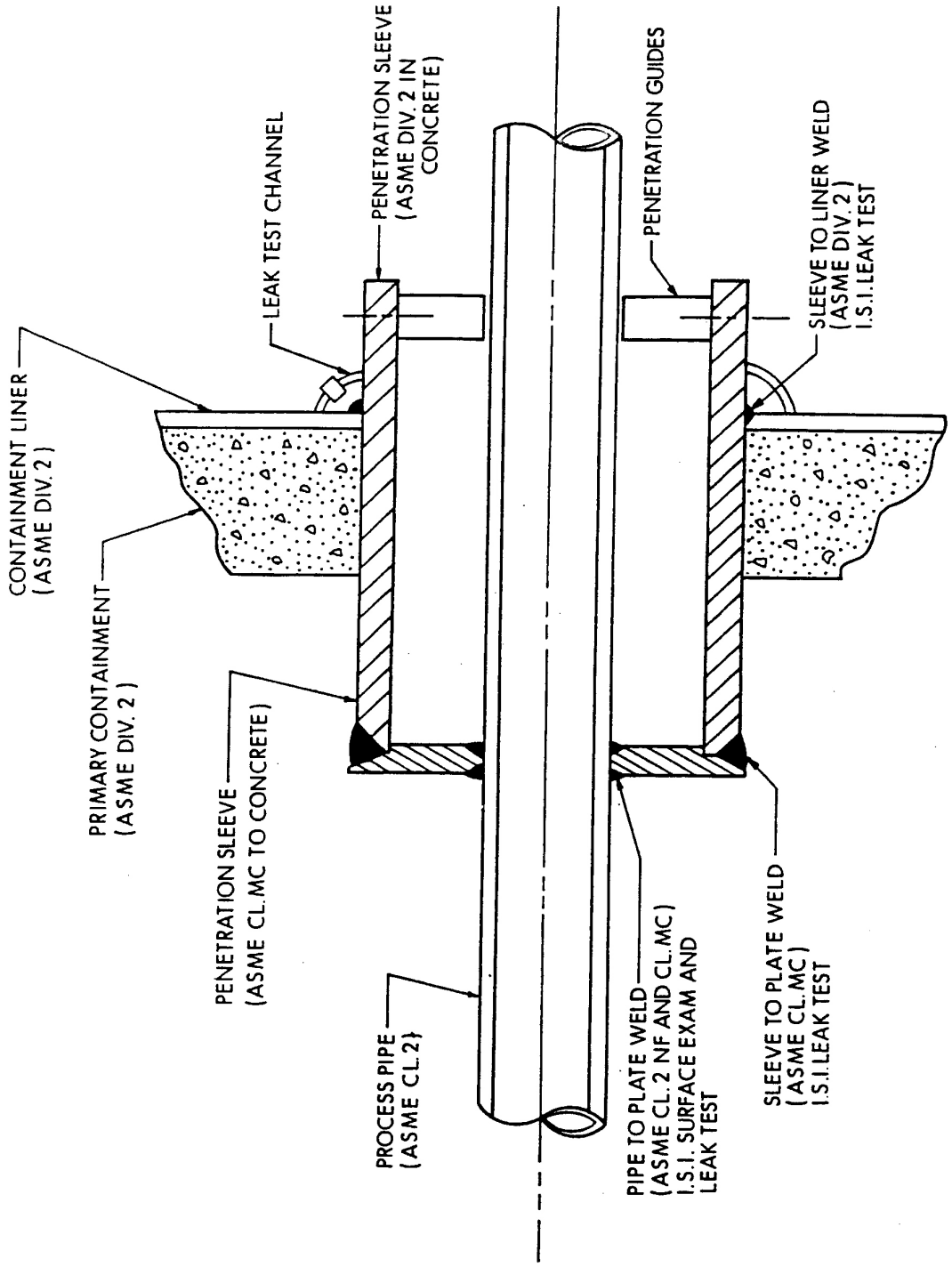

SEABROOK STATION UPDATED FINAL SAFETY ANALYSIS REPORT	Containment Penetration (Cold High Energy Lines)	
		Figure 3.6(B)-4

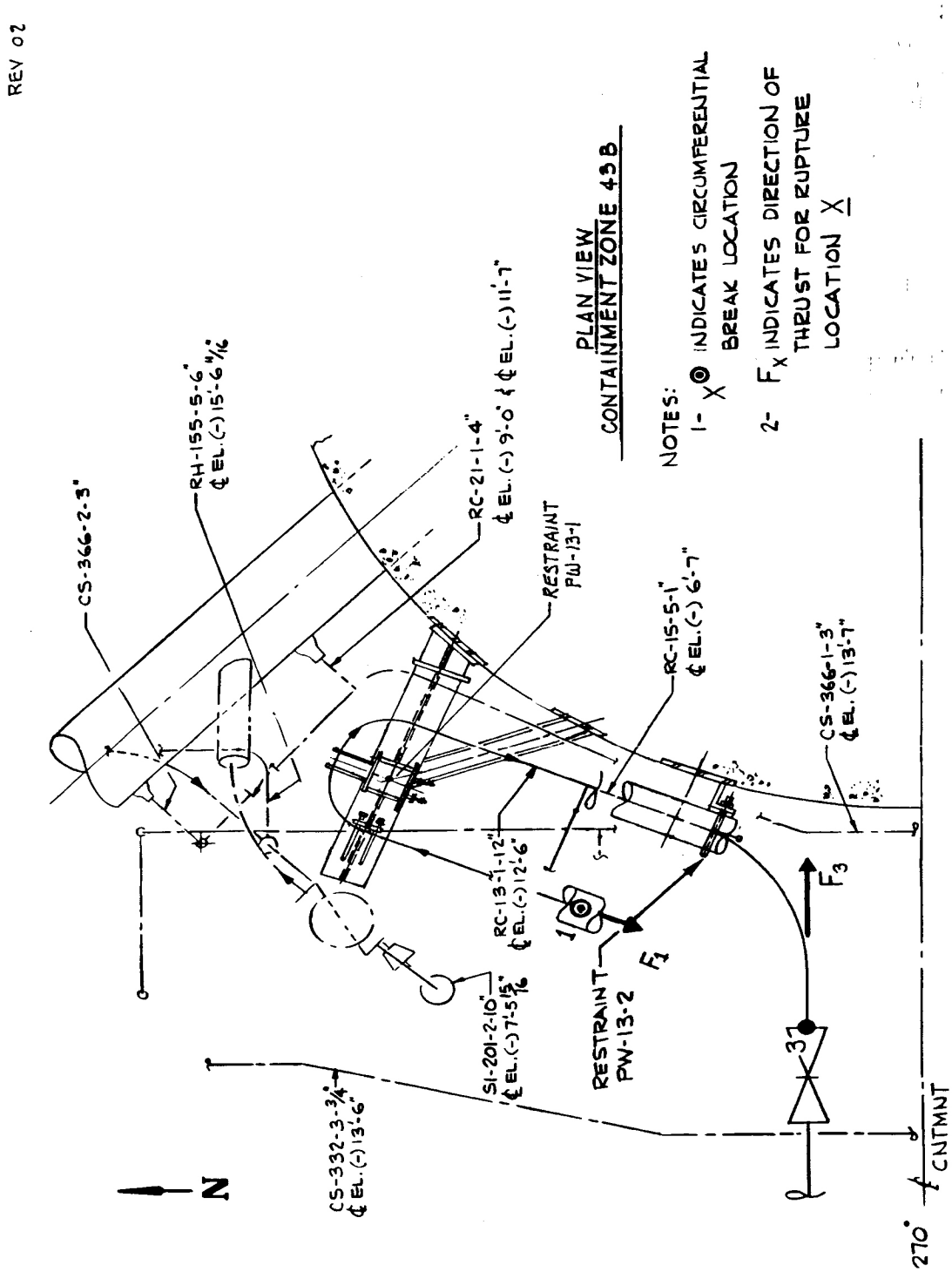

SEABROOK STATION UPDATED FINAL SAFETY ANALYSIS REPORT	RC Line 13 Pipe Whip Restraint Protecting CS, RC and RH Lines and Valves - Containment Zone 43B	
		Figure 3.6(B)-5

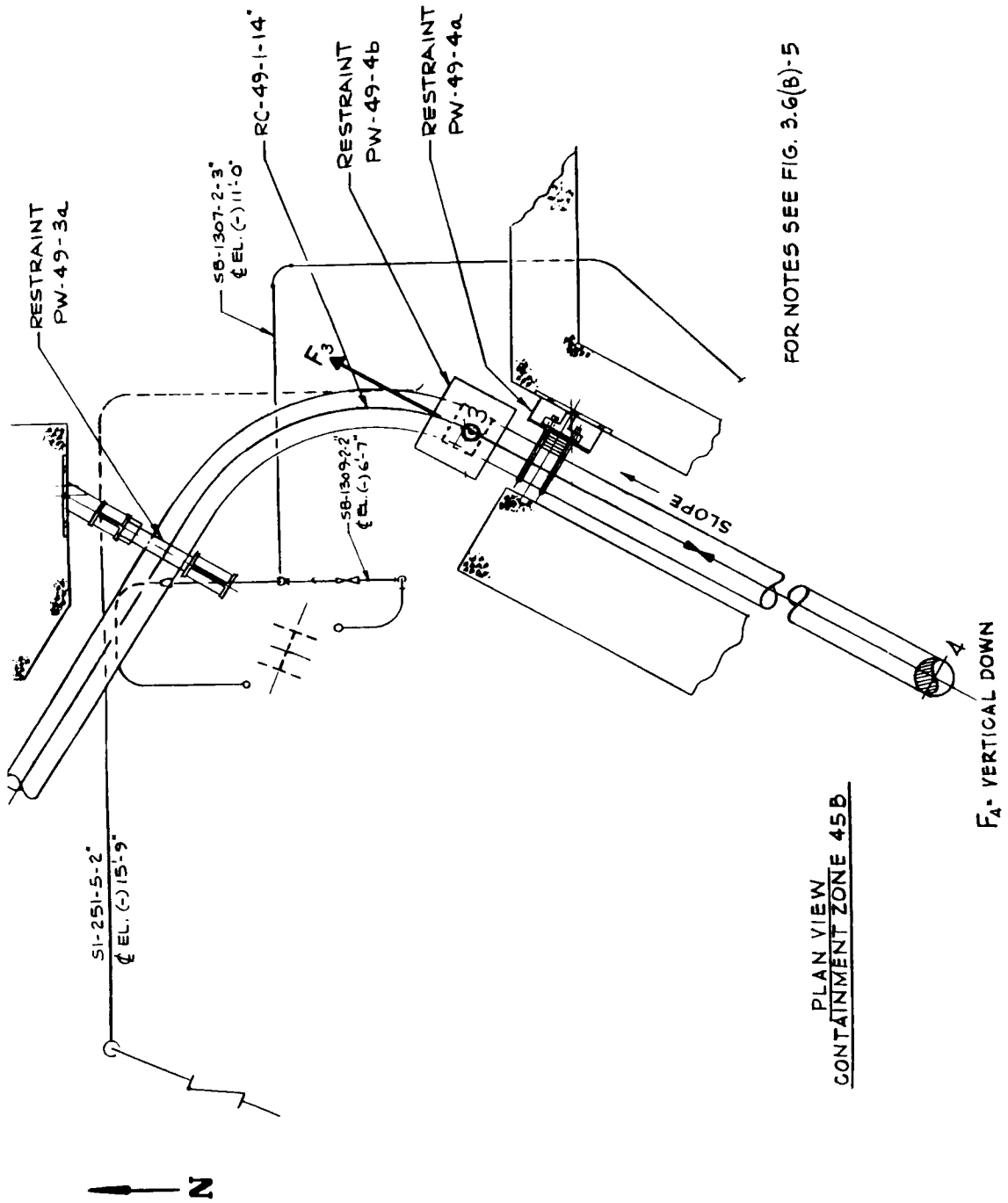

SEABROOK STATION UPDATED FINAL SAFETY ANALYSIS REPORT	Pressurizer Surge Line Pipe Whip Restraint Protecting Steam Generator Blowdown and Safety Injection Lines - Containment Zone 45B	
		Figure 3.6(B)-6

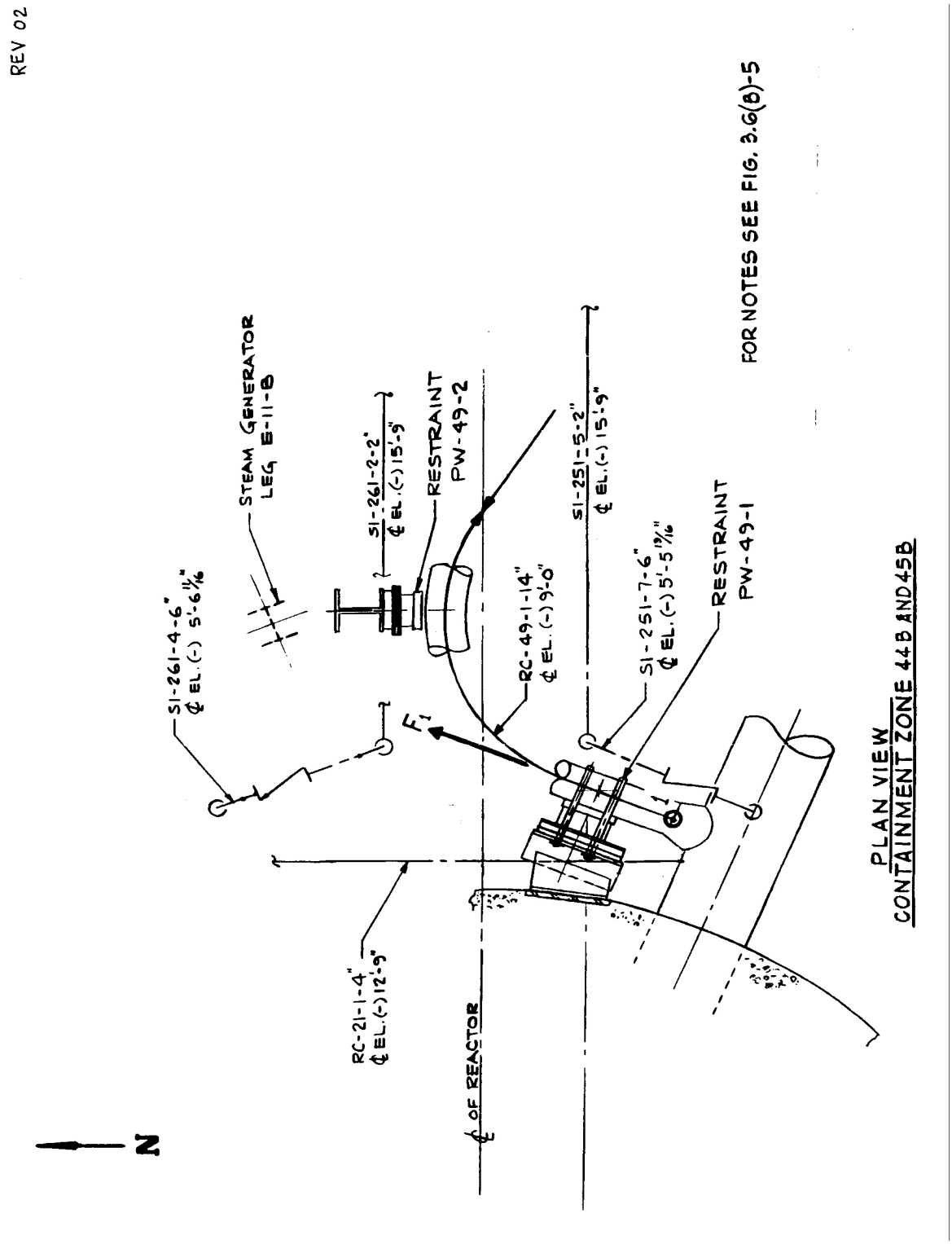

SEABROOK STATION UPDATED FINAL SAFETY ANALYSIS REPORT	Pressurizer Surge Line Pipe Whip Restraint Protecting Steam Generator Support, Reactor Coolant and Safety Injection Lines -Containment Zone 44B and 45B	
		Figure 3.6(B)-7

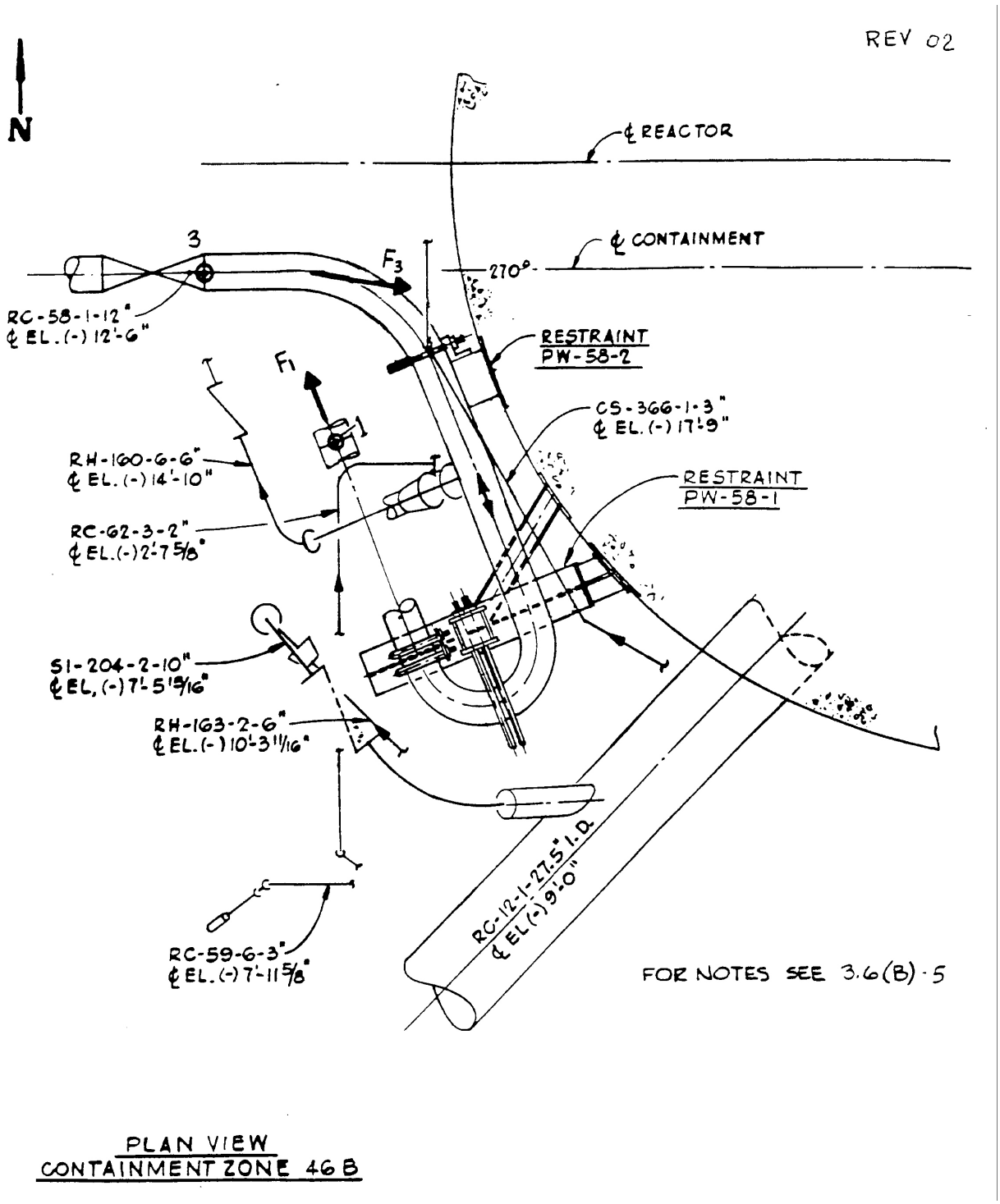

PLAN VIEW
CONTAINMENT ZONE 46B

SEABROOK STATION UPDATED FINAL SAFETY ANALYSIS REPORT	RC-58 Pipe Whip Restraint Protecting RC, RH, and SI Lines and Valves - Containment Zone 46B	
		Figure 3.6(B)-8

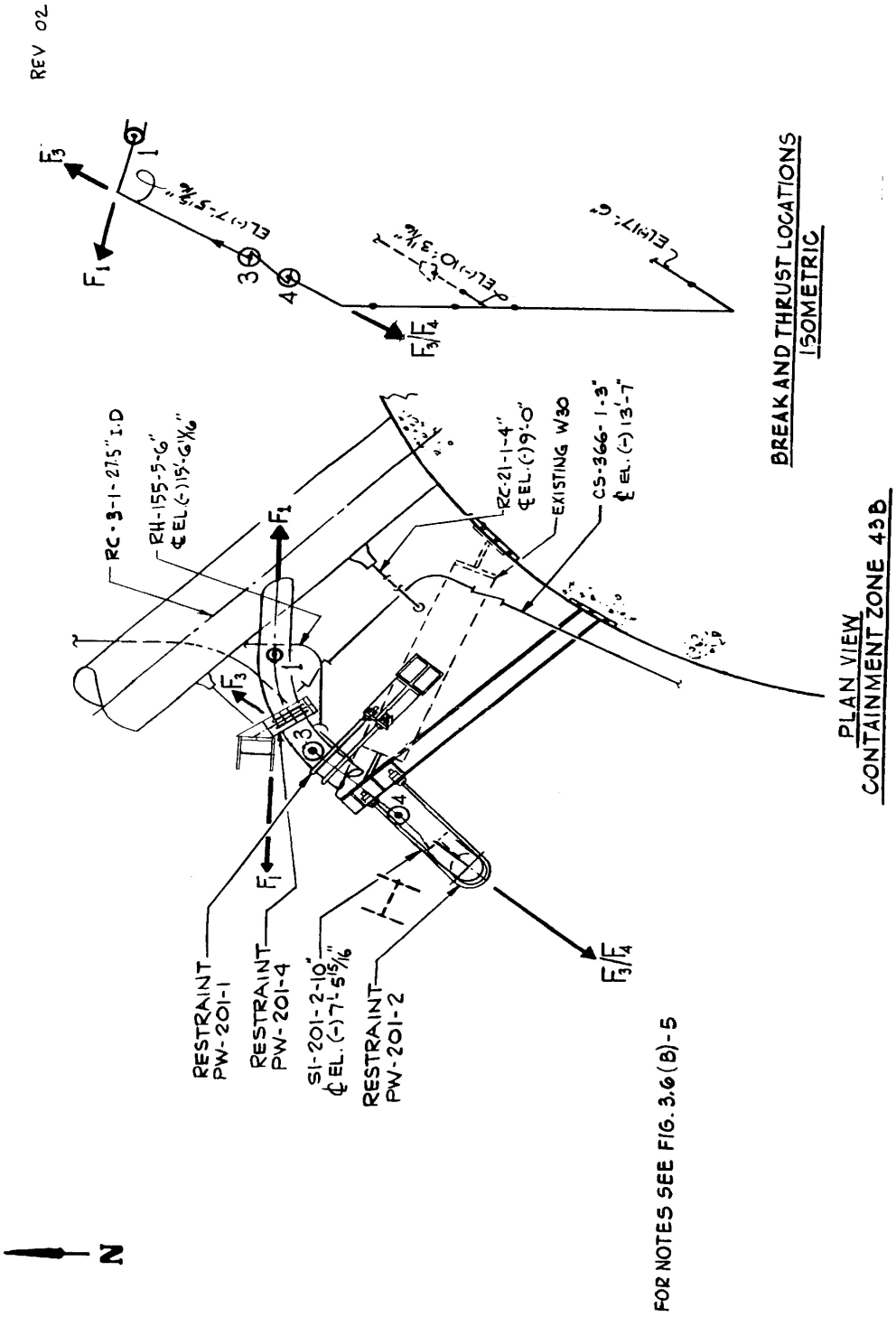

SEABROOK STATION UPDATED FINAL SAFETY ANALYSIS REPORT	Safety Injection Accumulator Line Pipe Whip Restraint Protecting CS, RH and RC Lines and Valves - Containment Zone 43B	
		Figure 3.6(B)-9

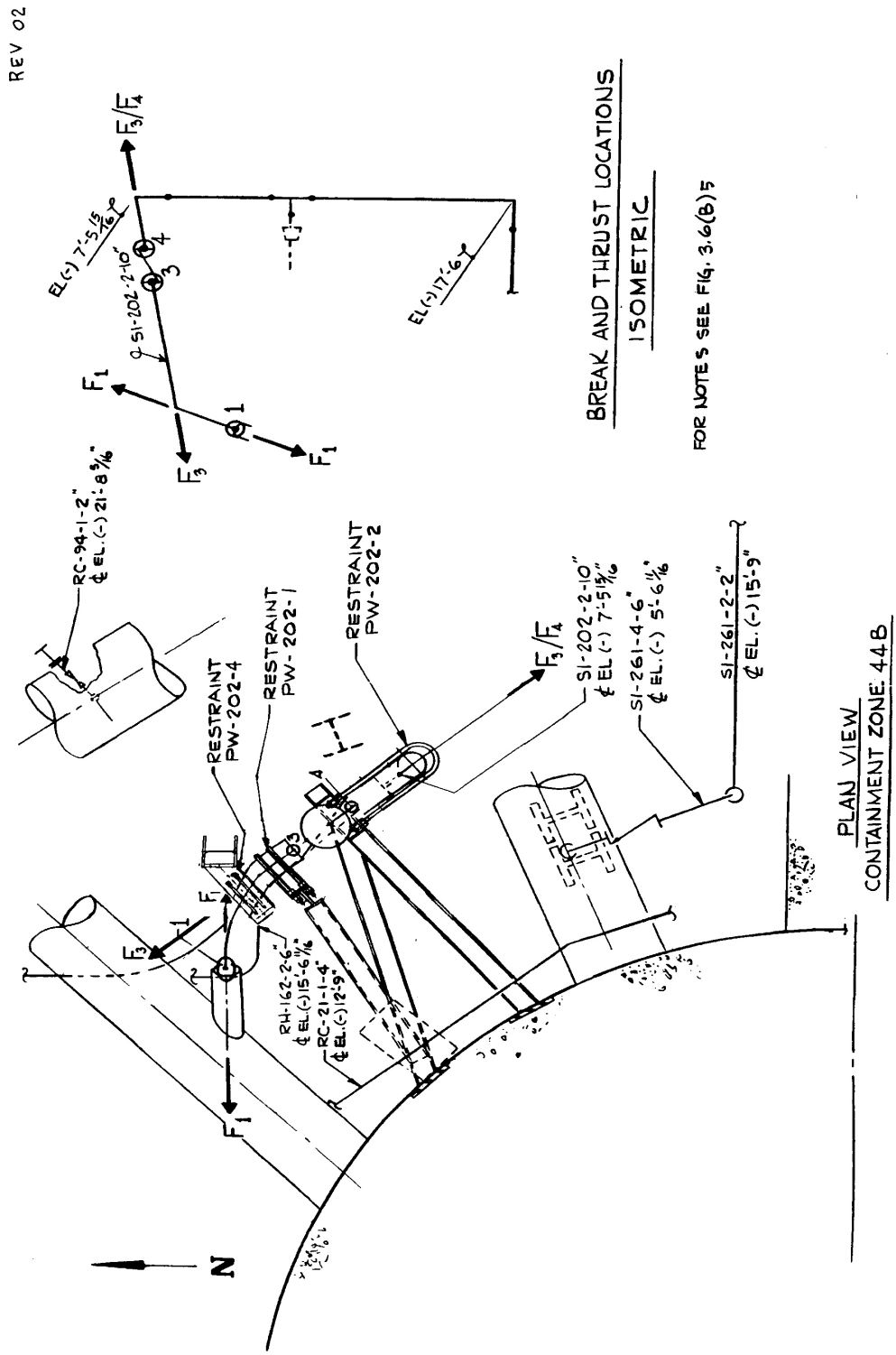

SEABROOK STATION UPDATED FINAL SAFETY ANALYSIS REPORT	SI Line Pipe Whip Restraints Protecting RC, RH, and SI Lines and Valves - Containment Zone 44B	
		Figure 3.6(B)-10

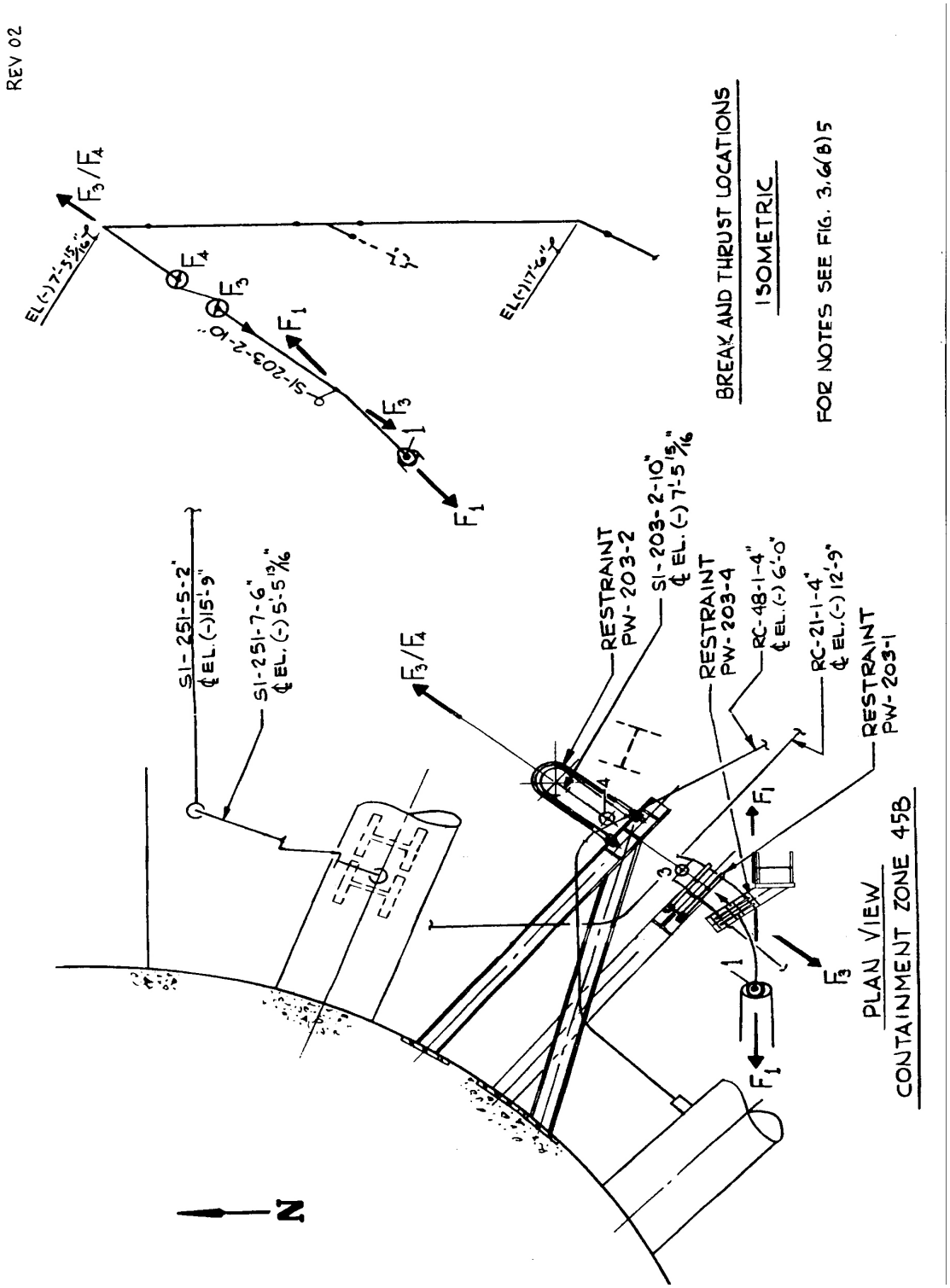

SEABROOK STATION UPDATED FINAL SAFETY ANALYSIS REPORT	SI Pipe Whip Restraint Protecting RC and SI Lines and Valves -Containment Zone 45B	
		Figure 3.6(B)-11

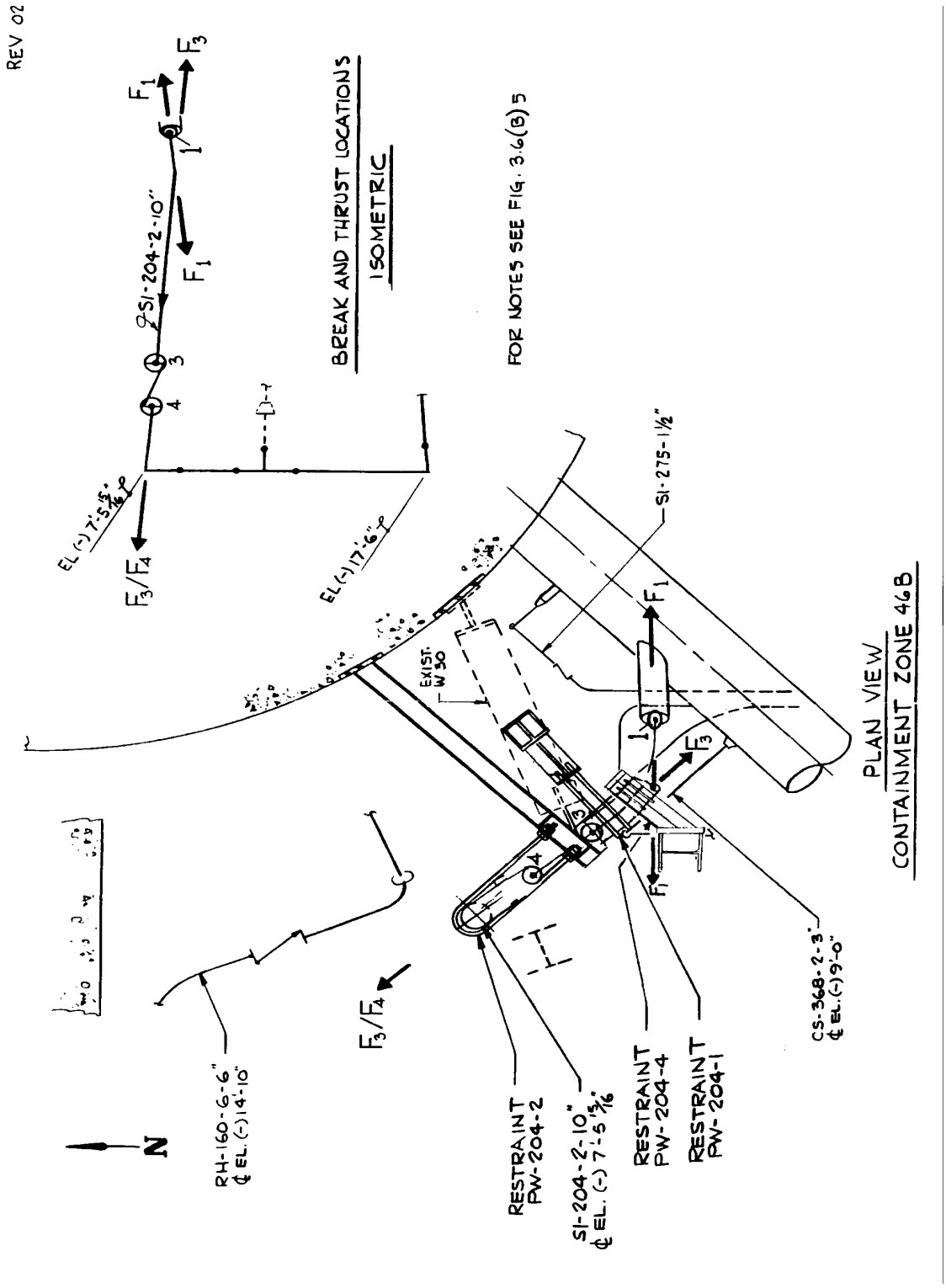

SEABROOK STATION UPDATED FINAL SAFETY ANALYSIS REPORT	SI Pipe Whip Restraint Protecting CS, RC, RH and SI Lines and Valves - Containment Zone 46B	
		Figure 3.6(B)-12

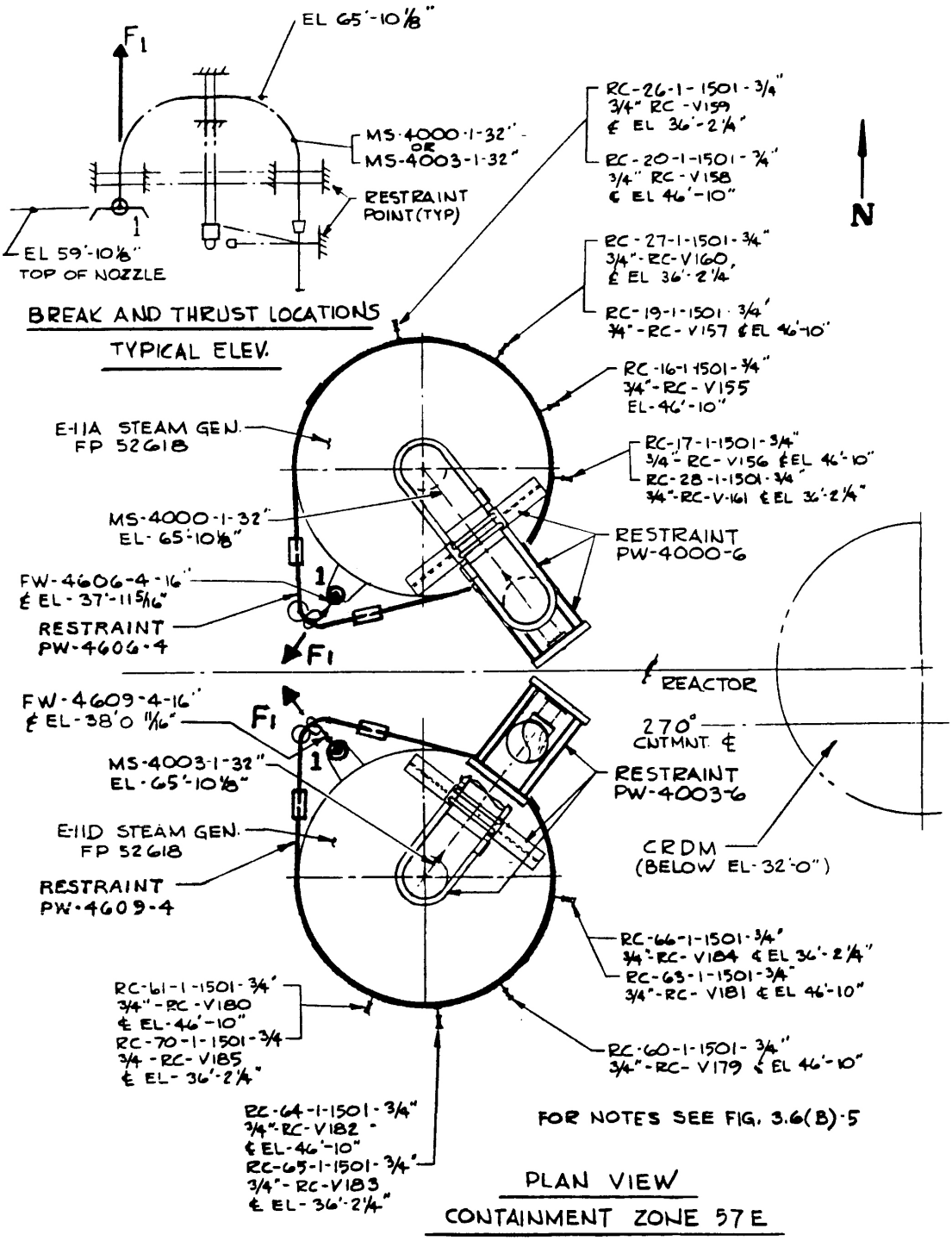

SEABROOK STATION UPDATED FINAL SAFETY ANALYSIS REPORT	MS & FW Pipe Whip Restraints Protecting MS and RC Lines, Upper Level Taps and CRDM Assembly - Containment Zone 57E [2 Sheets]	
		Figure 3.6(B)-13 Sh. 1 of 2

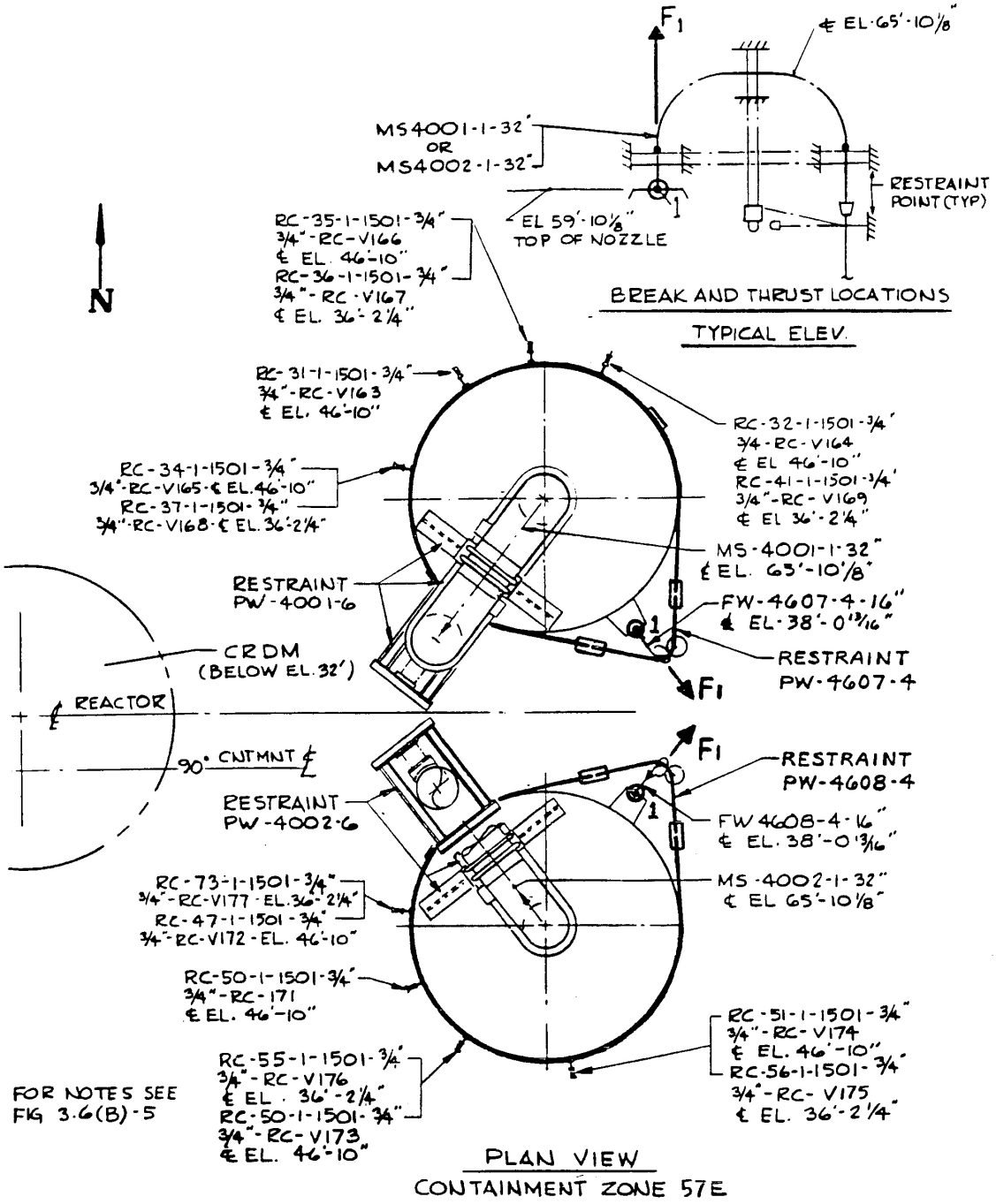

SEABROOK STATION UPDATED FINAL SAFETY ANALYSIS REPORT	MS & FW Pipe Whip Restraints Protecting MS and RC Lines, Upper Level Taps and CRDM Assembly - Containment Zone 57E [2 Sheets]	
		Figure 3.6(B)-13 Sh. 2 of 2

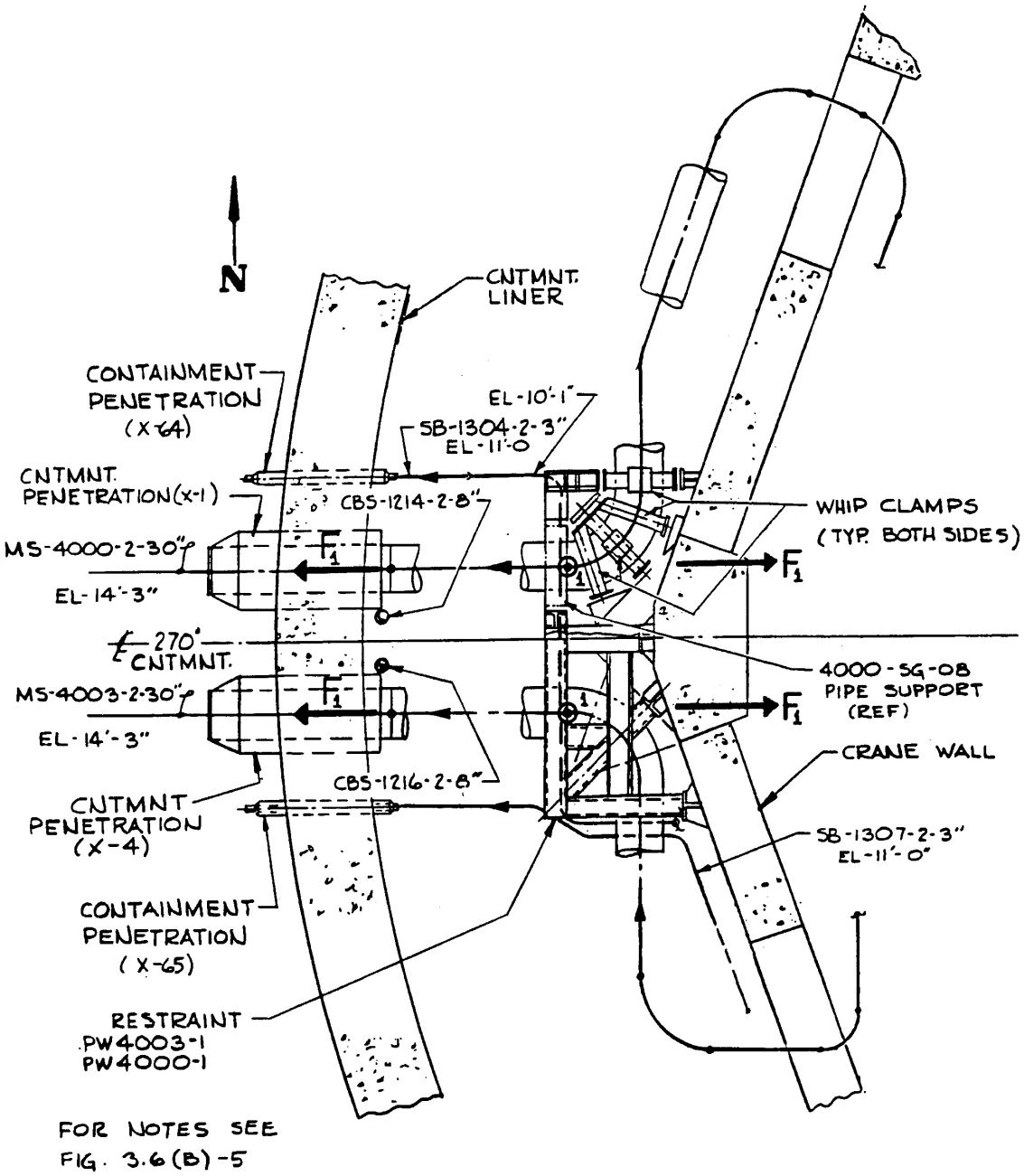

PLAN VIEW
CONTAINMENT ZONE 53C

SEABROOK STATION UPDATED FINAL SAFETY ANALYSIS REPORT	Main Steam Pipe Whip Restraints Protecting SB, CBS Lines, Valves and Containment Liner/Penetrations - Containment Zone 53C	
		Figure 3.6(B)-14

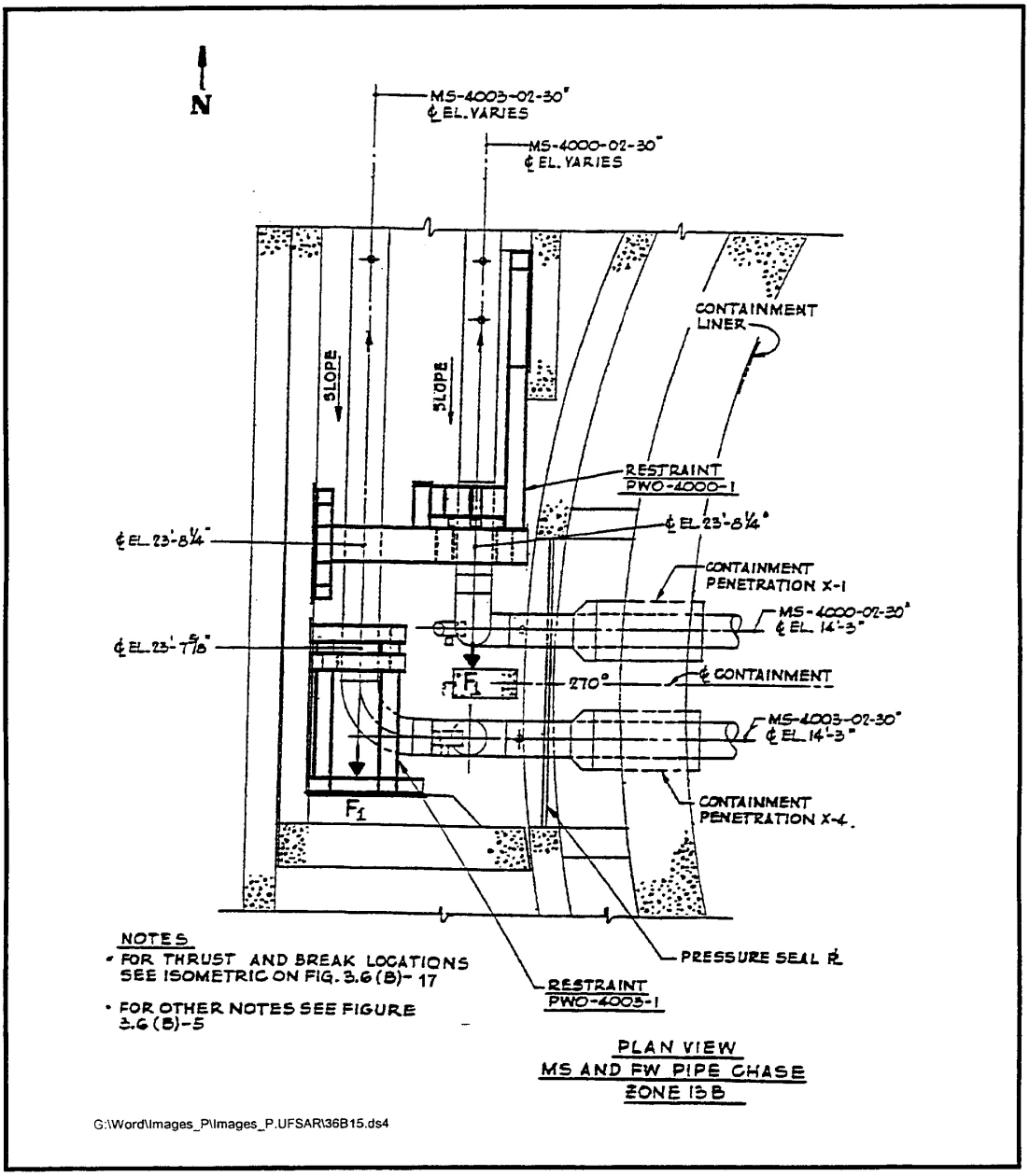

SEABROOK STATION UPDATED FINAL SAFETY ANALYSIS REPORT	Main Steam Line Axial Pipe Whip Restraints Protecting Containment Penetrations - MS and FW Pipe Chase Zone 13B	
		Figure 3.6(B)-15

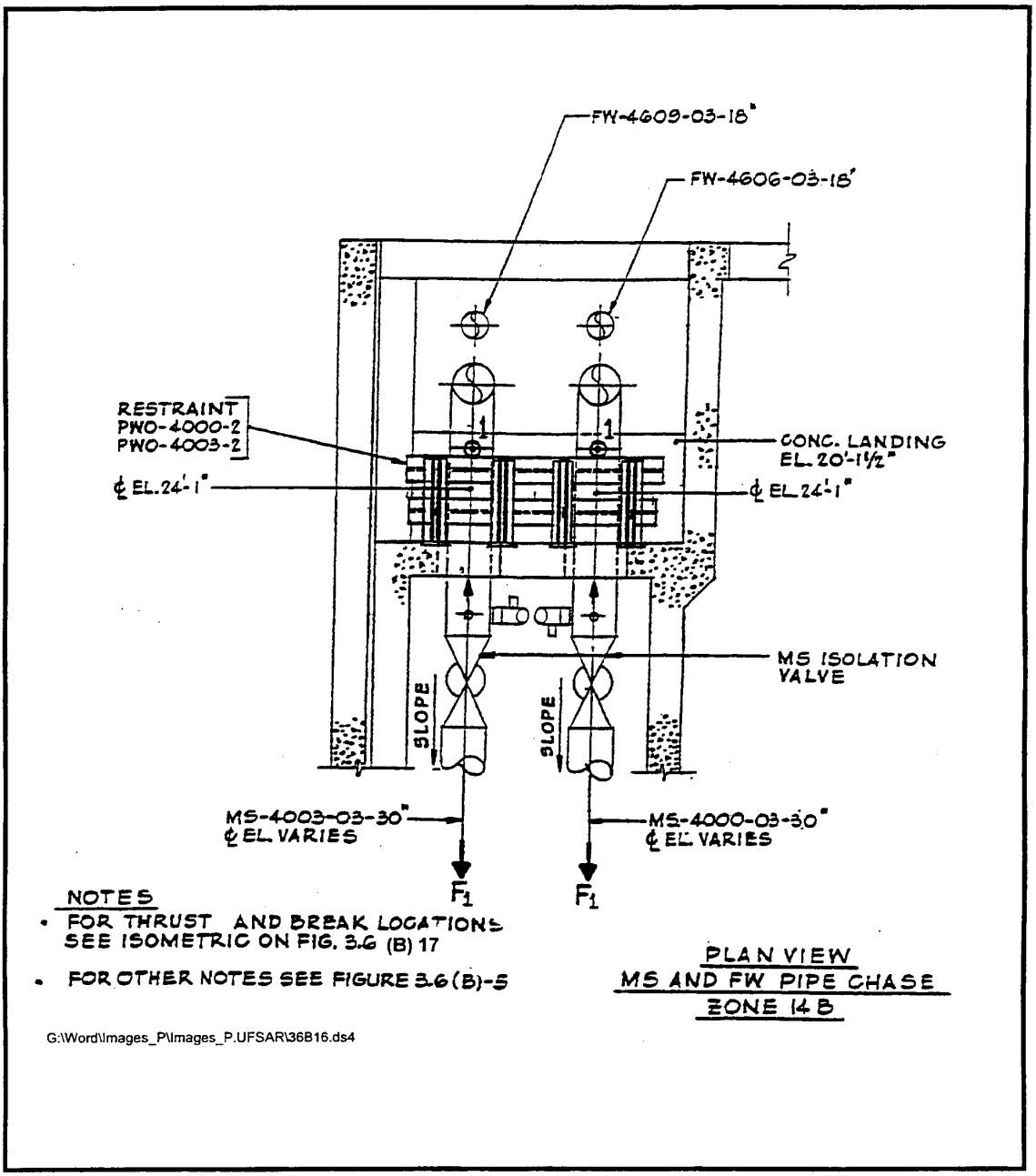

SEABROOK STATION UPDATED FINAL SAFETY ANALYSIS REPORT	Main Steam Pipe Whip Restraints Protecting the Main Steam Isolation Valves and the Containment Penetrations - MS and FW Pipe Chase Zone 14B	
		Figure 3.6(B)-16

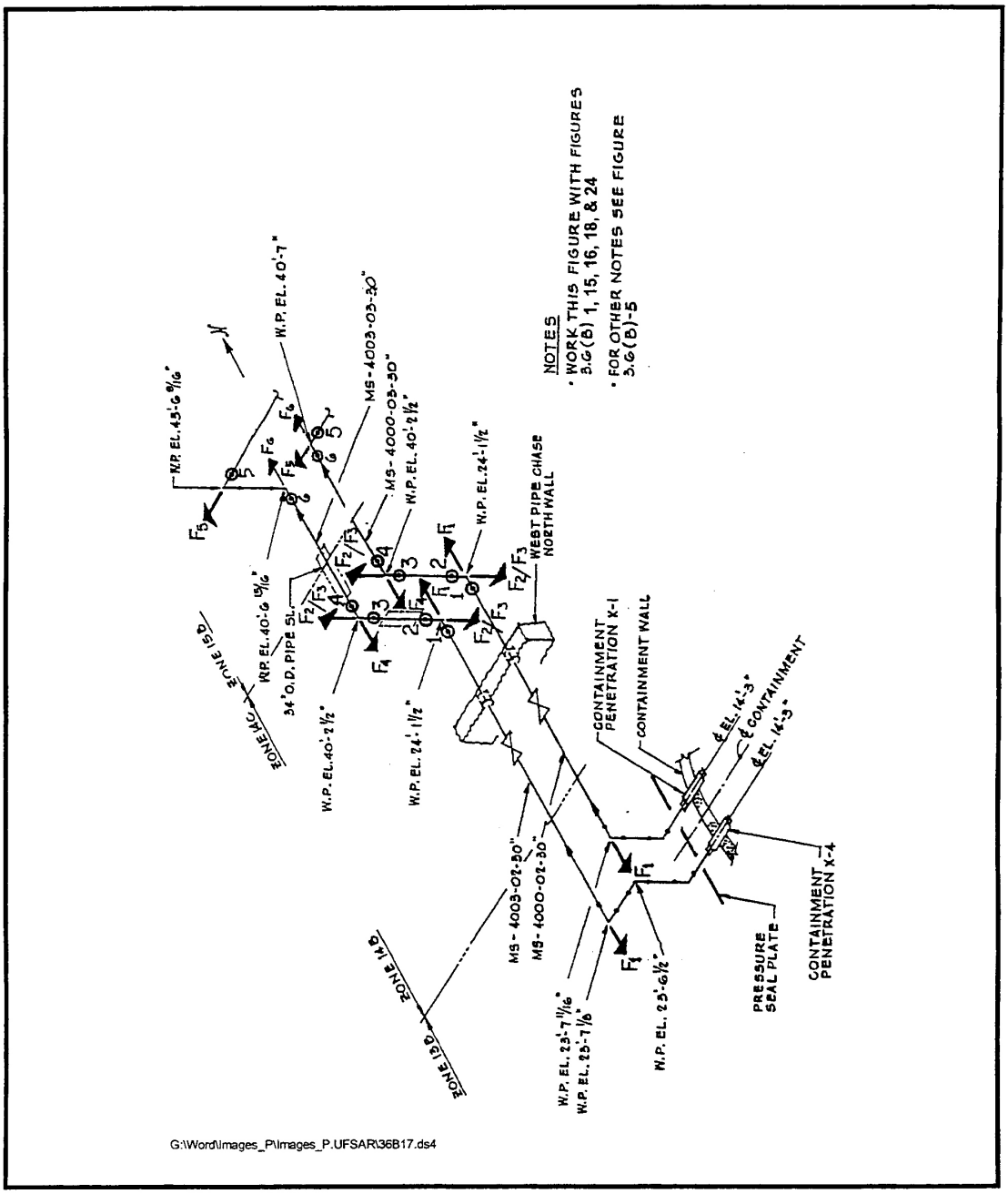

SEABROOK STATION UPDATED FINAL SAFETY ANALYSIS REPORT	Break and Thrust Locations Isometric for MS Pipes in West Pipe Chase	
		Figure 3.6(B)-17

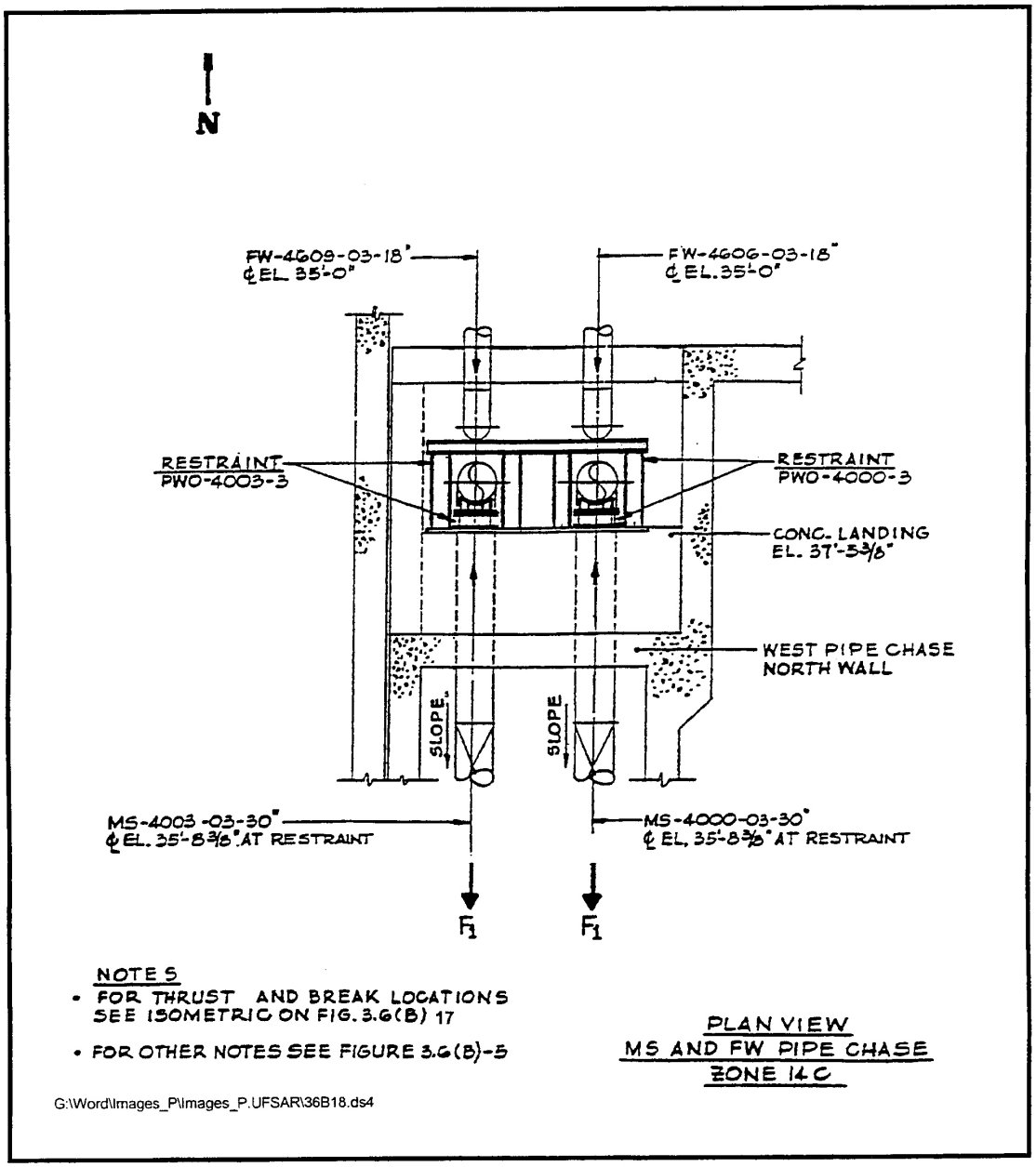

SEABROOK STATION UPDATED FINAL SAFETY ANALYSIS REPORT	Main Steam Line Axial Pipe Whip Restraints Protecting Containment Penetrations-MS and FW Pipe Chase Zone 16B	
		Figure 3.6(B)-18

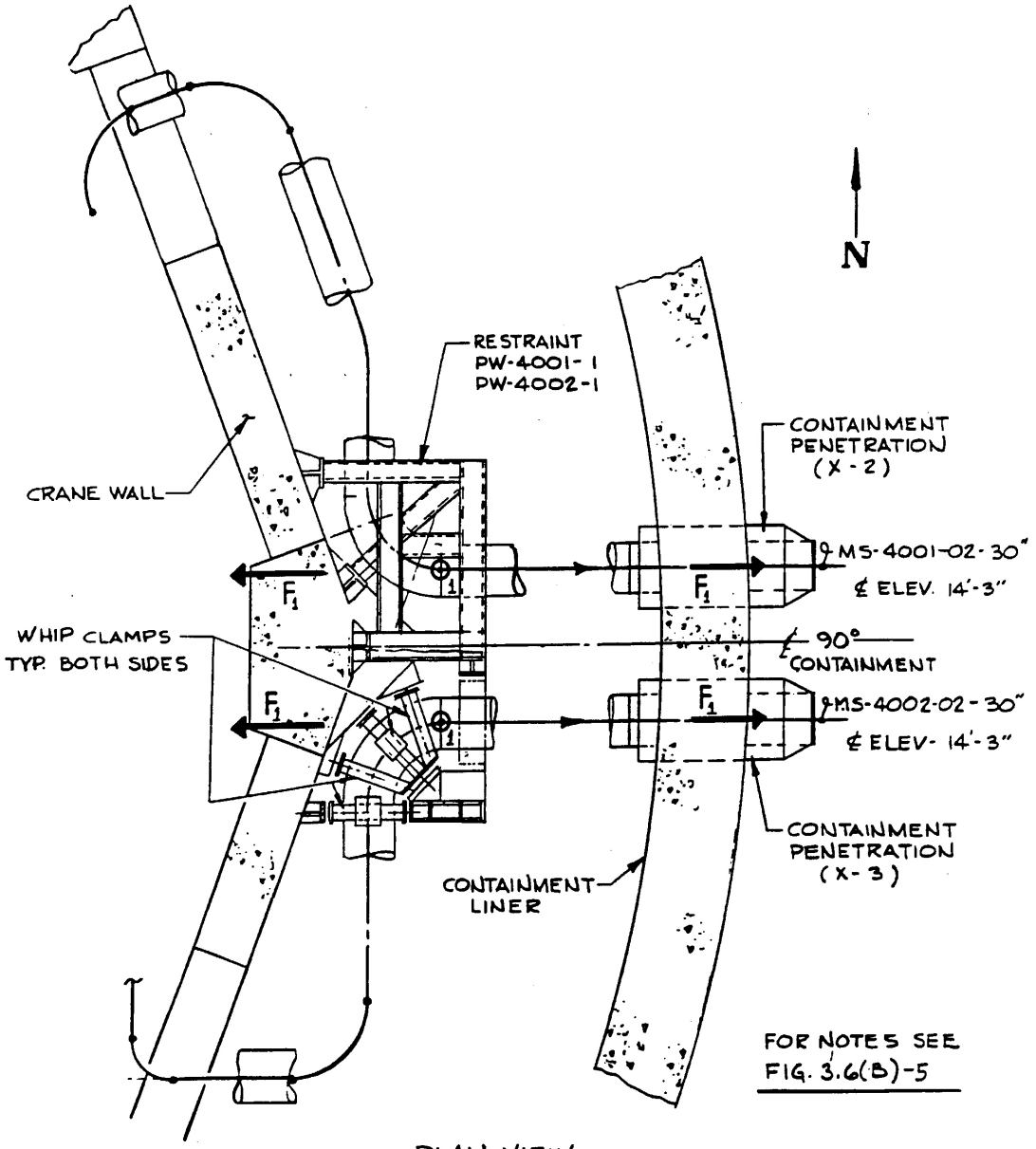

PLAN VIEW
CONTAINMENT ZONE 55D

SEABROOK STATION UPDATED FINAL SAFETY ANALYSIS REPORT	Main Steam Pipe Whip Restraint Protecting Containment Liner and Penetrations - Containment Zone 55D	
		Figure 3.6(B)-19

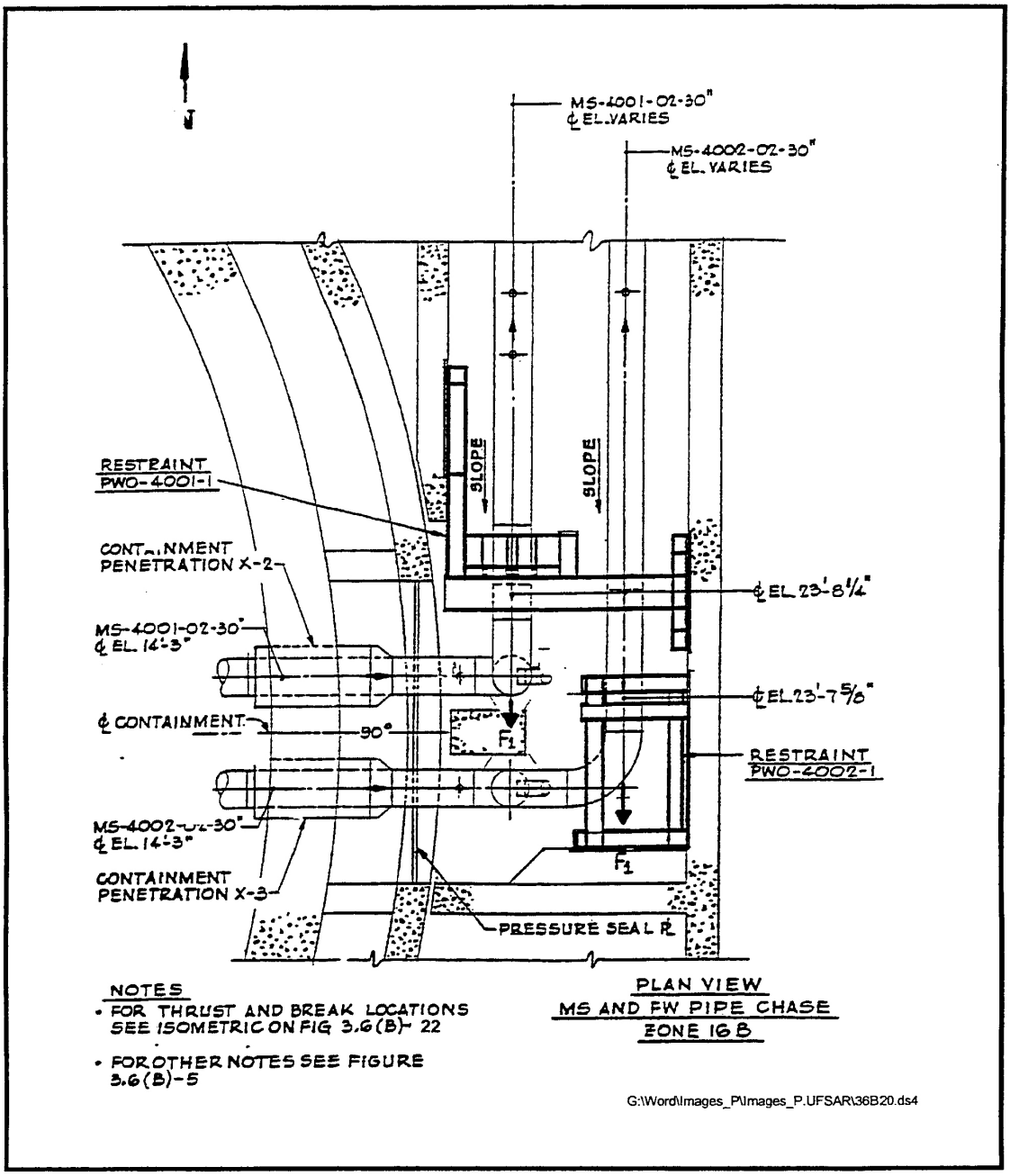

SEABROOK STATION UPDATED FINAL SAFETY ANALYSIS REPORT	Main Steam Line Axial Pipe Whip Restraints Protecting Containment Penetrations - MS and FW Pipe Chase Zone 16B	
		Figure 3.6(B)-20

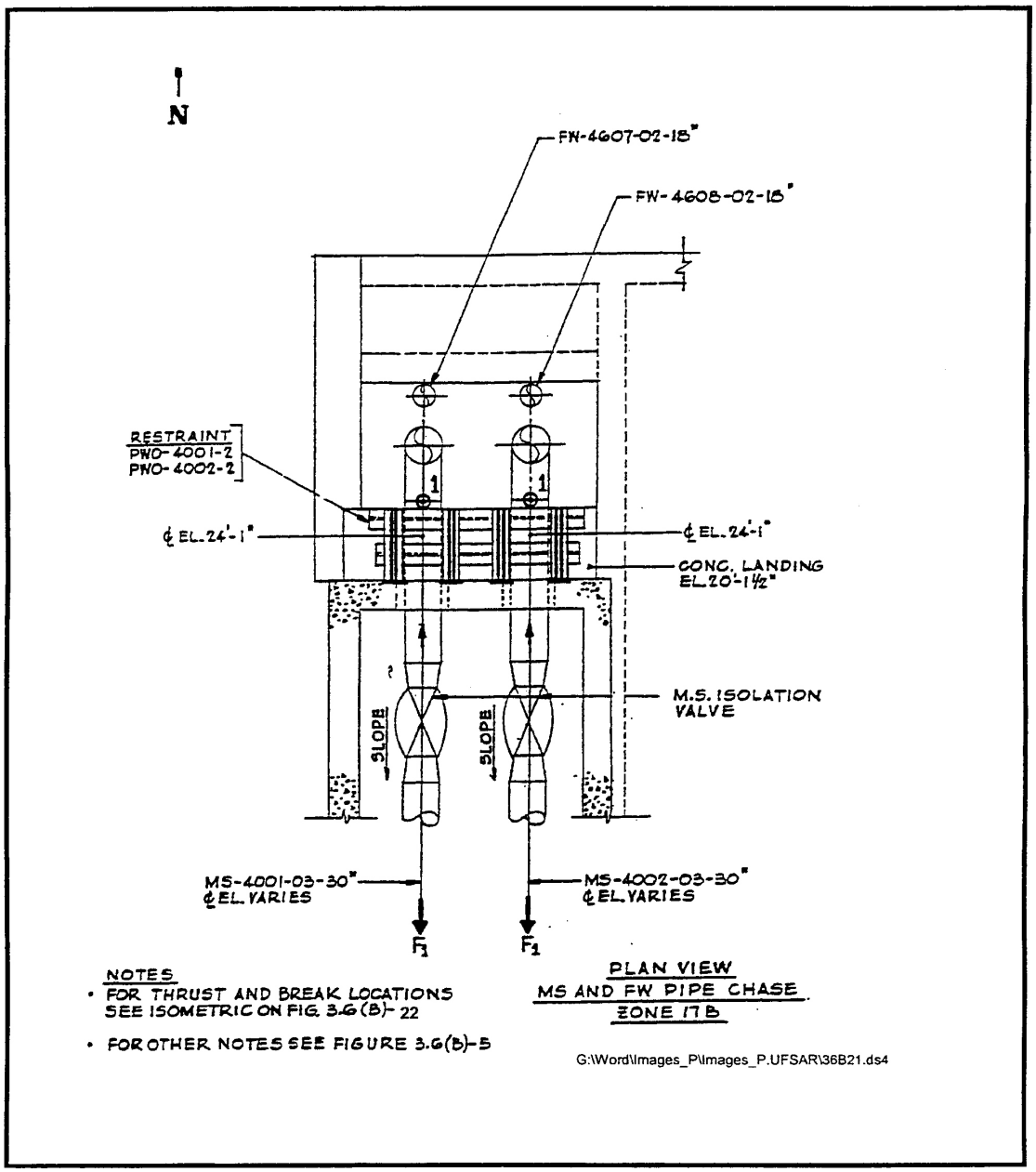

SEABROOK STATION UPDATED FINAL SAFETY ANALYSIS REPORT	Main Steam Pipe Whip Restraints Protecting the Main Steam Isolation Valves and Containment Penetrations - MS and FW Pipe Chase Zone 17B	
		Figure 3.6(B)-21

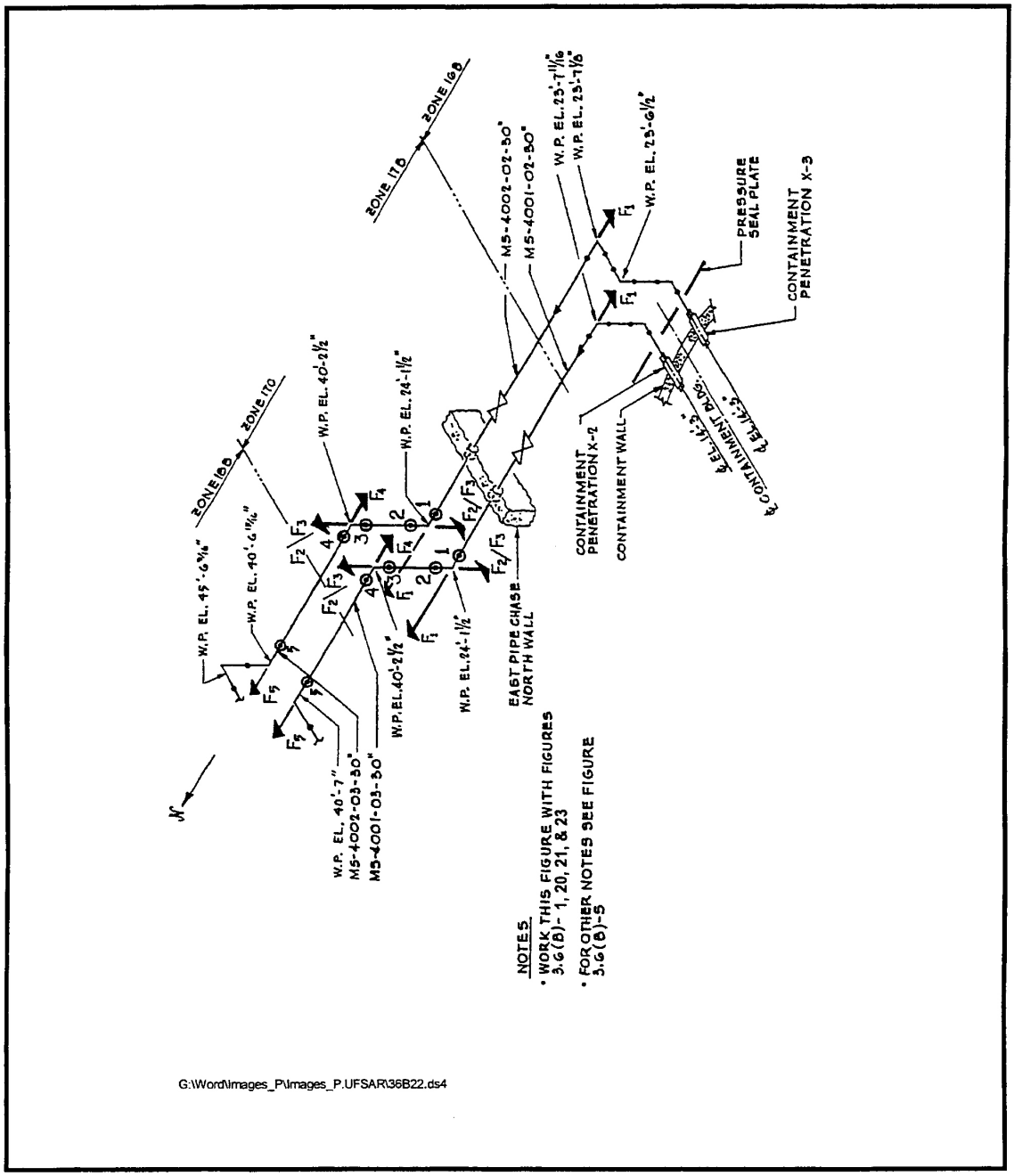

SEABROOK STATION UPDATED FINAL SAFETY ANALYSIS REPORT	Break and Thrust Locations Isometric for MS Pipes in East Pipe Chase	
		Figure 3.6(B)-22

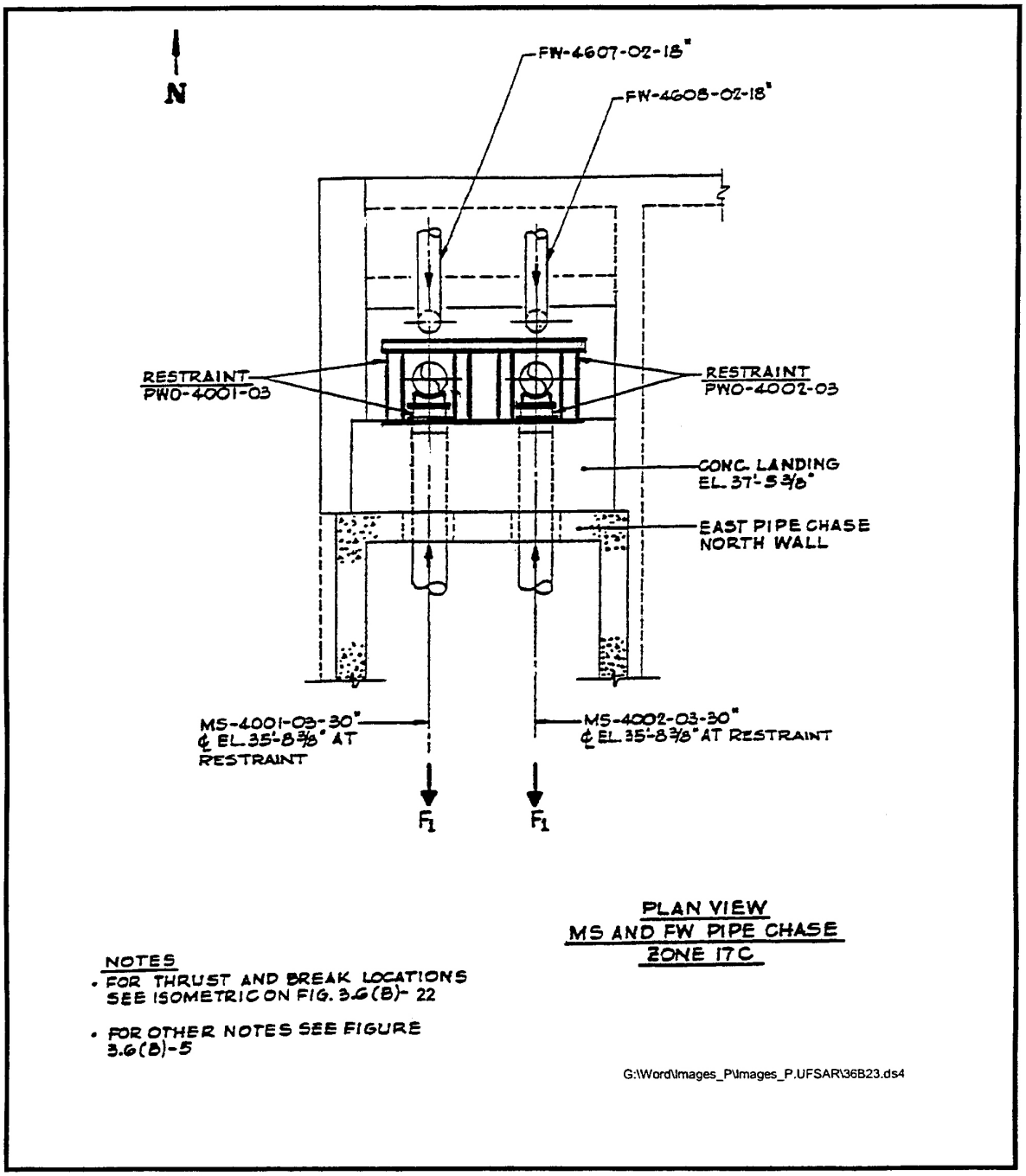

SEABROOK STATION UPDATED FINAL SAFETY ANALYSIS REPORT	Main Steam Pipe Whip Restraints Protecting West Pipe Chase North Wall - MS and FW Pipe Chase Zone 17C	
		Figure 3.6(B)-23

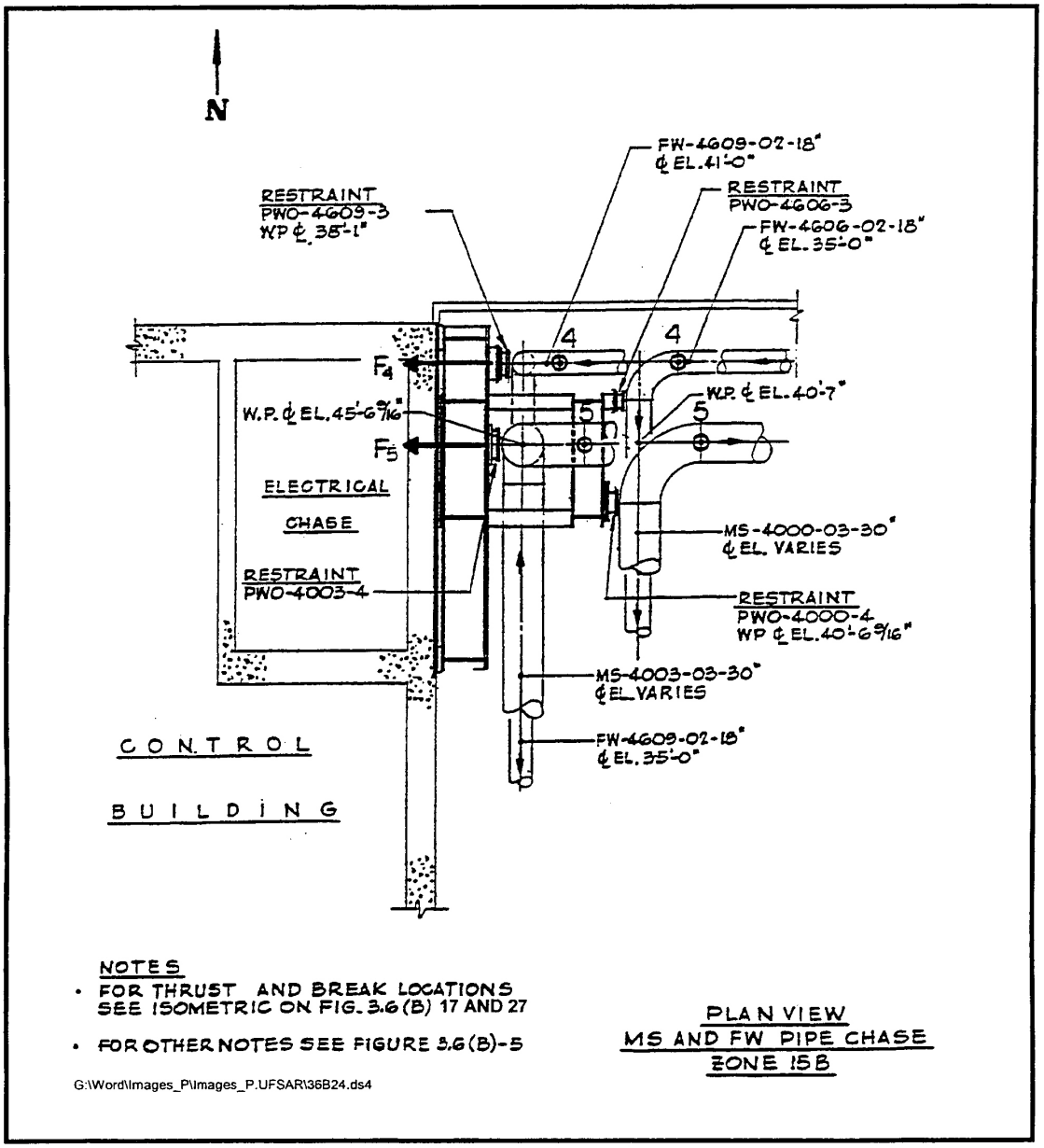

SEABROOK STATION UPDATED FINAL SAFETY ANALYSIS REPORT	Main Steam and Feedwater Pipe Whip Restraints Protecting East Wall of Control Building and Electrical Chase - MS and FW Pipe Chase Zone 15B	
		Figure 3.6(B)-24

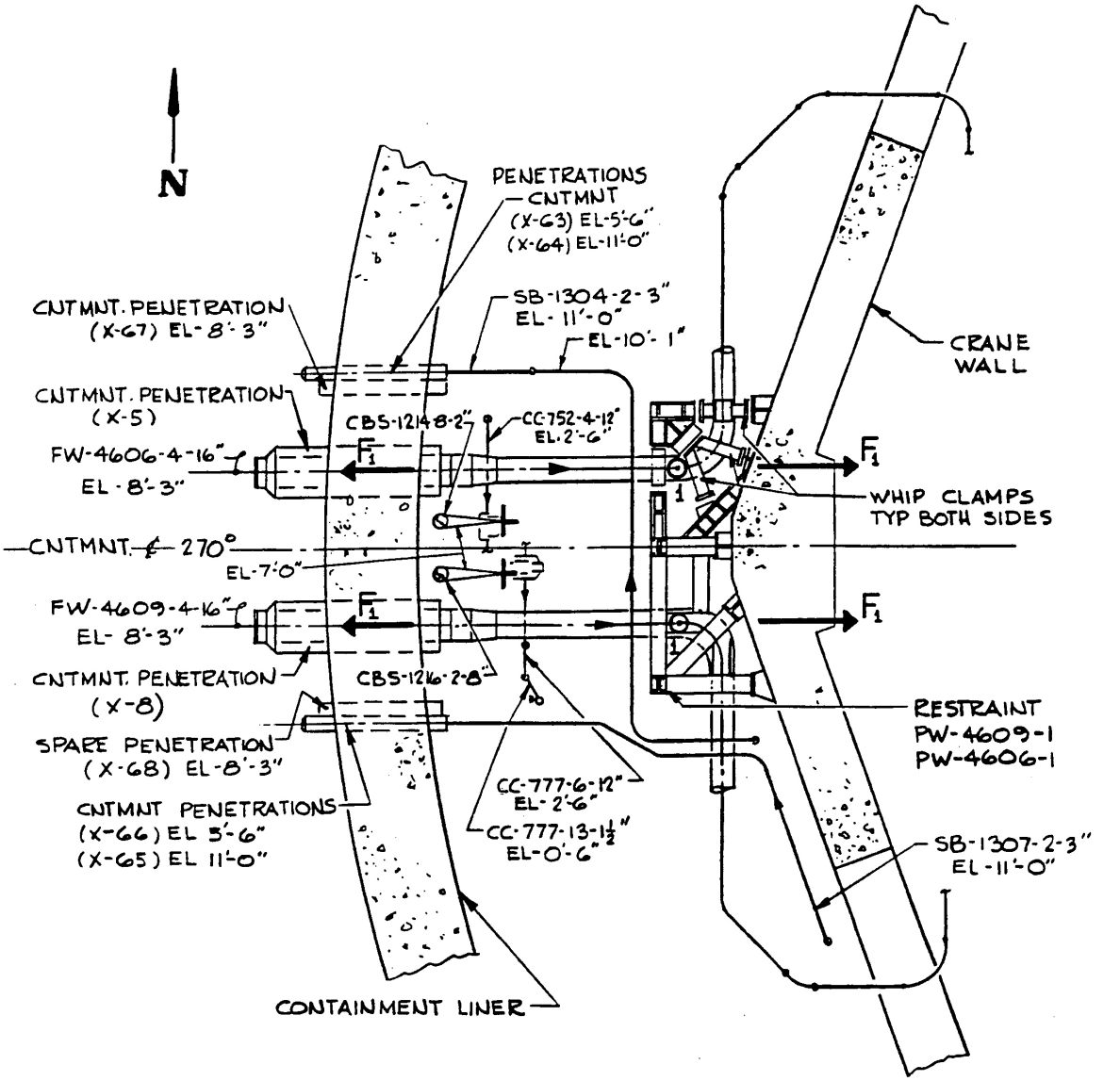

FOR NOTES SEE FIG. 3.6(B)-5

PLAN VIEW
CONTAINMENT ZONE 53C

SEABROOK STATION UPDATED FINAL SAFETY ANALYSIS REPORT	Feedwater Pipe Whip Restraint Protecting the Containment Liner and Penetrations and CC & SB Lines and Valves - Containment Zone 53C	
		Figure 3.6(B)-25

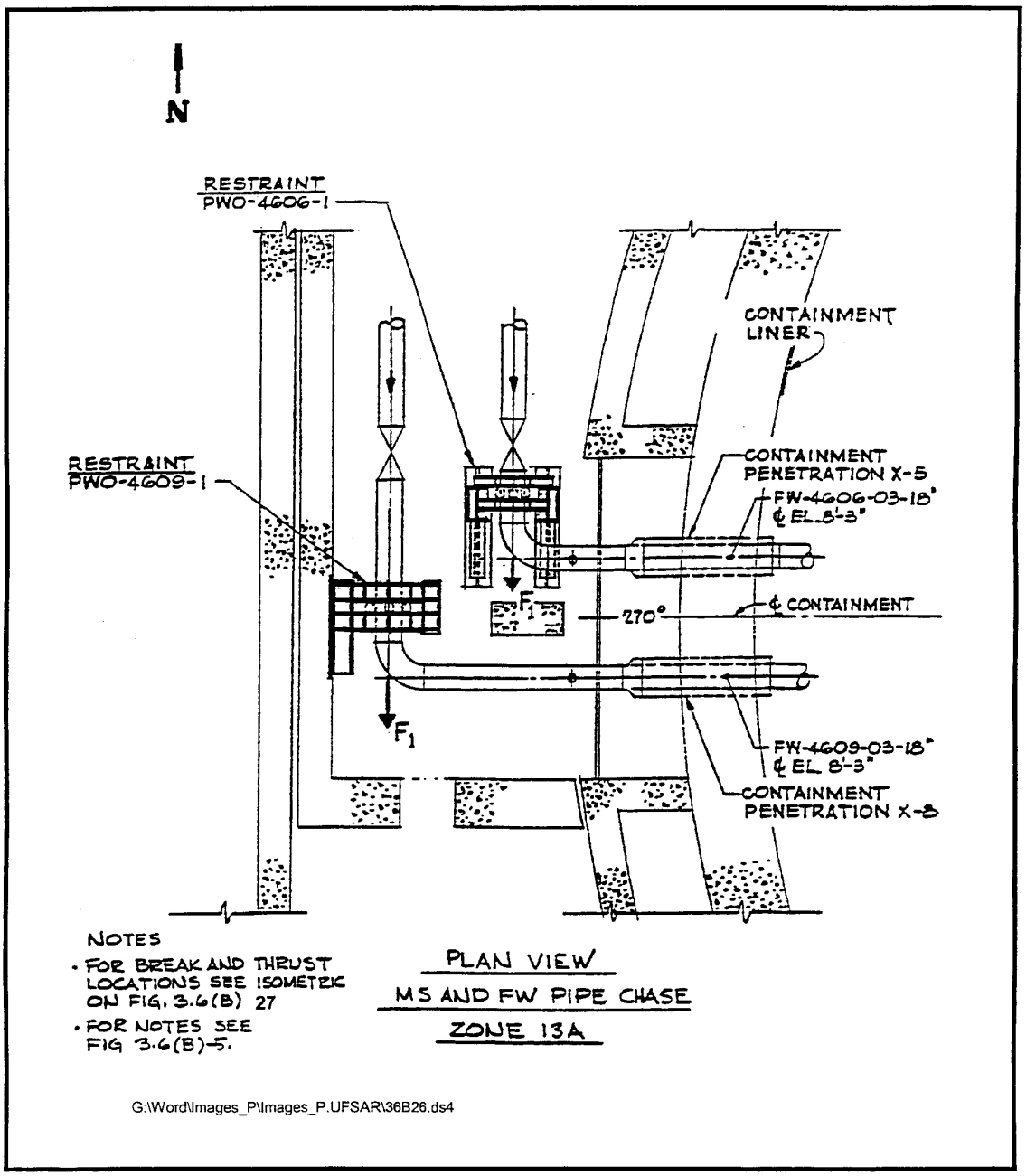

SEABROOK STATION UPDATED FINAL SAFETY ANALYSIS REPORT	Feedwater Pipe Whip Restraints Protecting Containment Liner and Penetrations - MS and FW Pipe Chase Zone 13A	
		Figure 3.6(B)-26

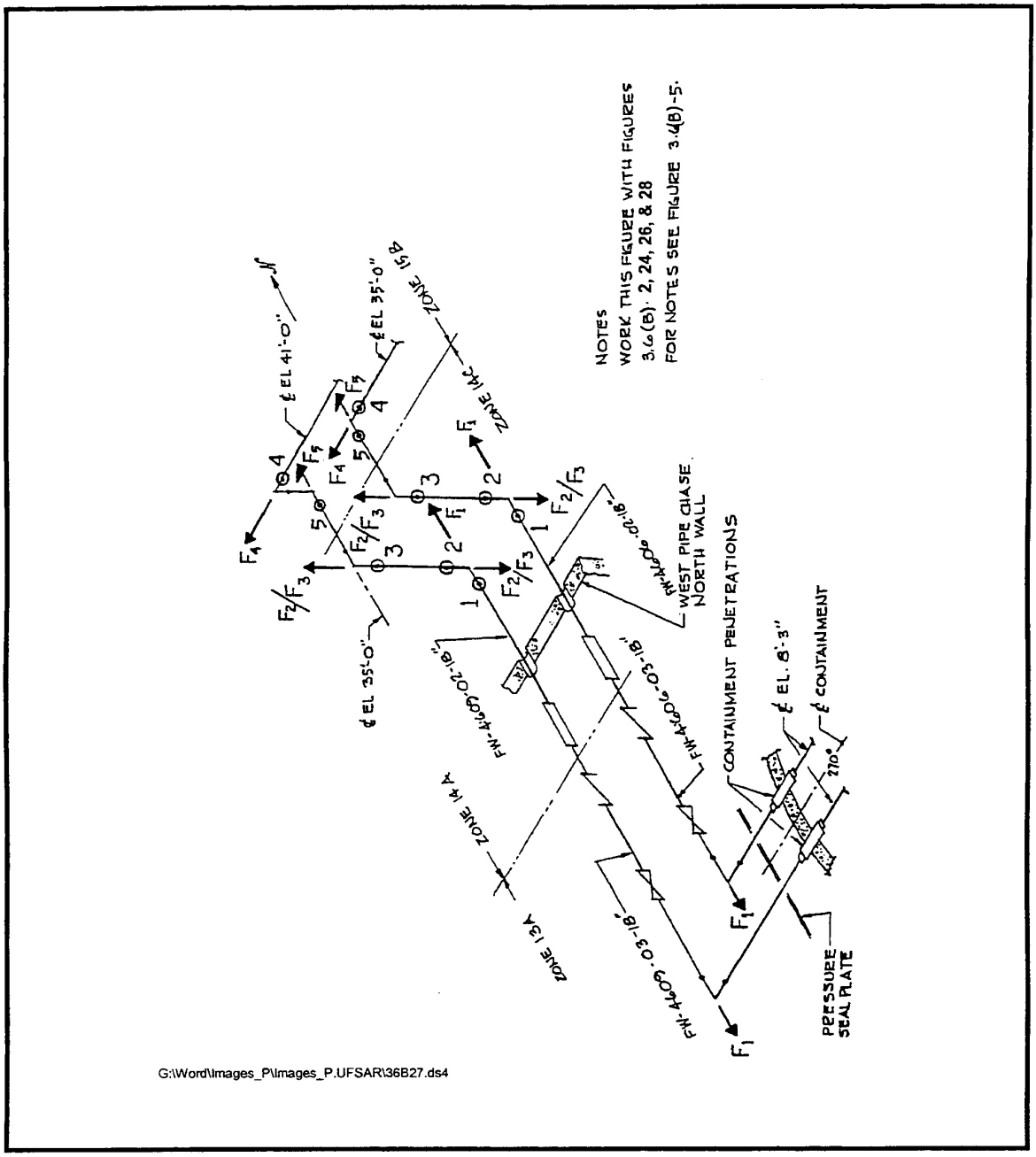

SEABROOK STATION UPDATED FINAL SAFETY ANALYSIS REPORT	Break and Thrust Locations Isometric for FW Pipes in West Pipe Chase	
		Figure 3.6(B)-27

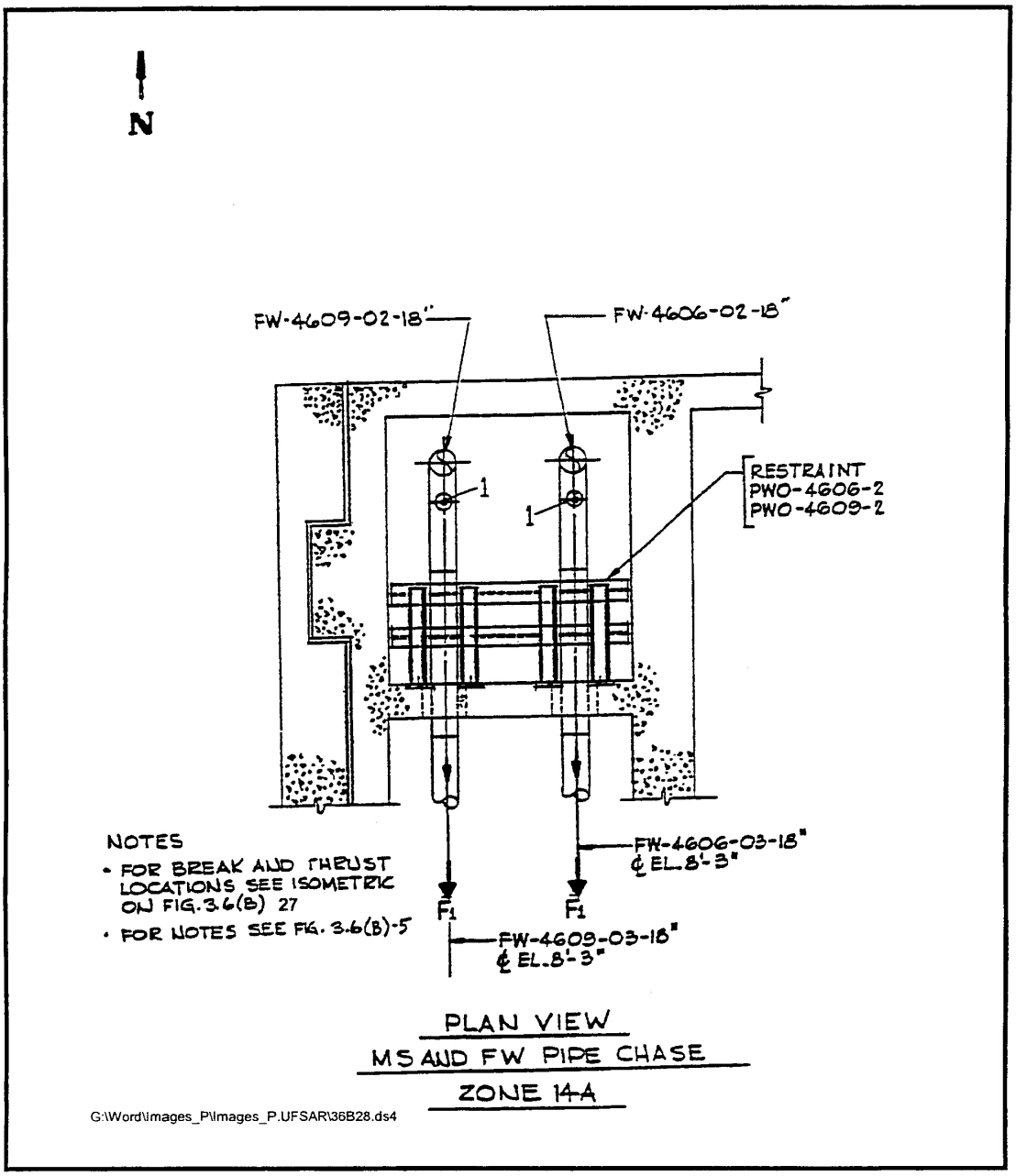

SEABROOK STATION UPDATED FINAL SAFETY ANALYSIS REPORT	Feedwater Pipe Whip Restraints Protecting Containment Liner and Penetrations - MS and FW Pipe Chase Zone 14A	
		Figure 3.6(B)-28

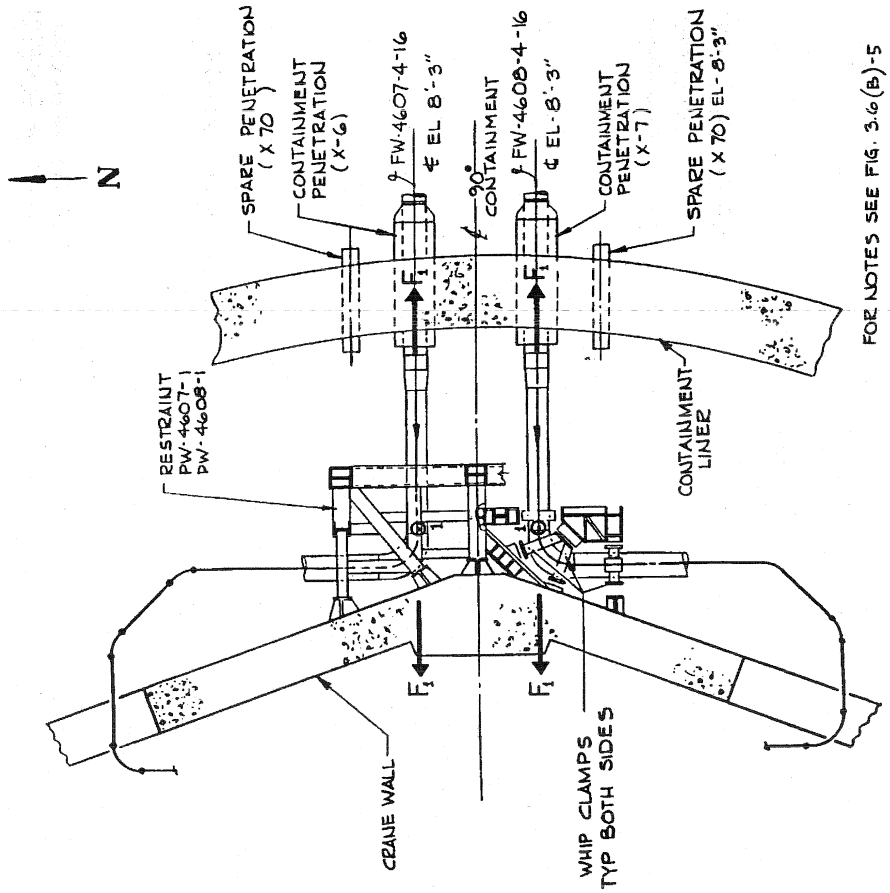

SEABROOK STATION UPDATED FINAL SAFETY ANALYSIS REPORT	Feedwater Pipe Whip Restraints Protecting Containment Liner and Penetrations - Containment Zone 55C	
		Figure 3.6(B)-29

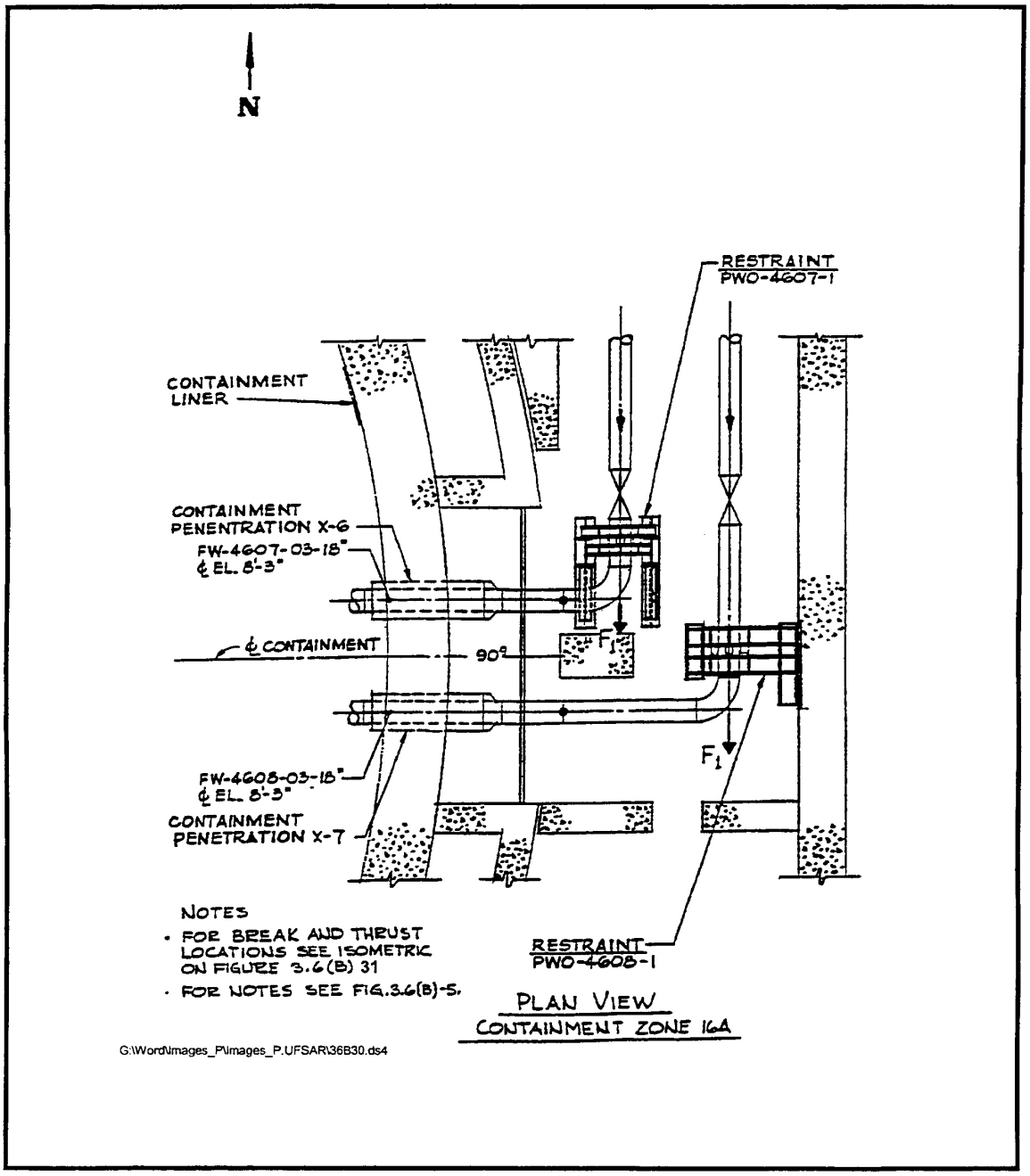

SEABROOK STATION UPDATED FINAL SAFETY ANALYSIS REPORT	Feedwater Pipe Whip Restraints Protecting Containment Liner and Penetrations - Containment Zone 16A	
		Figure 3.6(B)-30

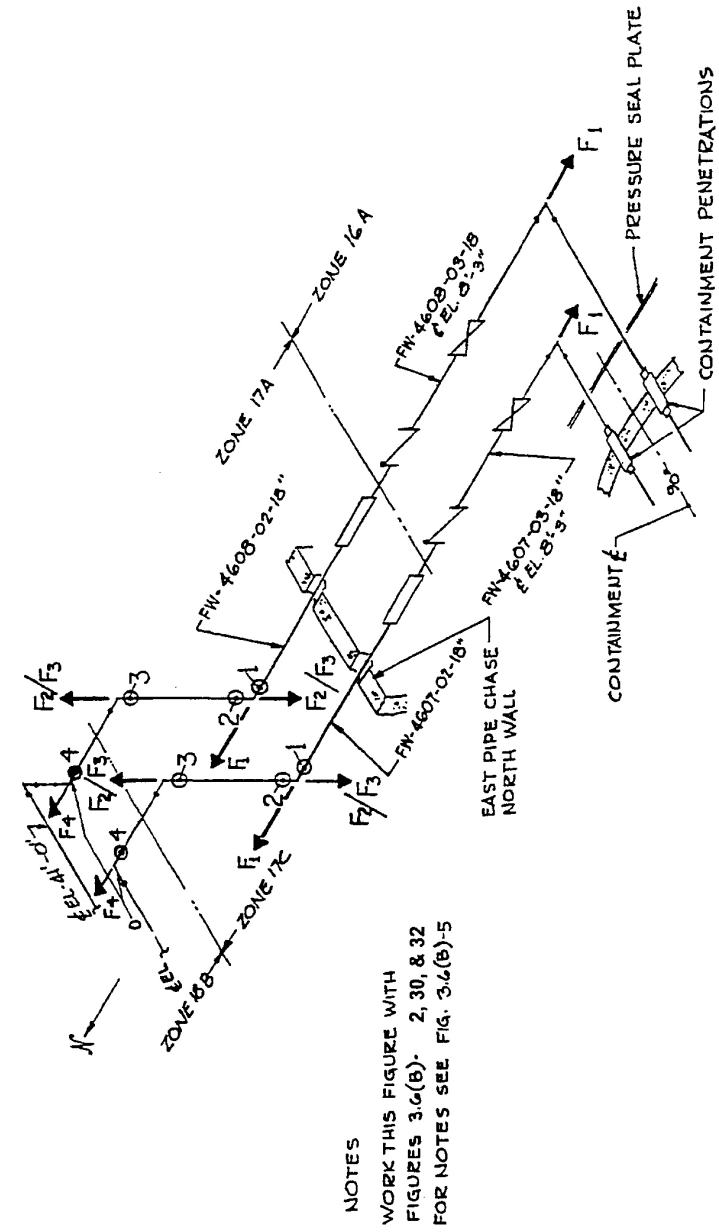

SEABROOK STATION UPDATED FINAL SAFETY ANALYSIS REPORT	Break and Thrust Locations Isometric for FW Pipes in East Chase	
		Figure 3.6(B)-31

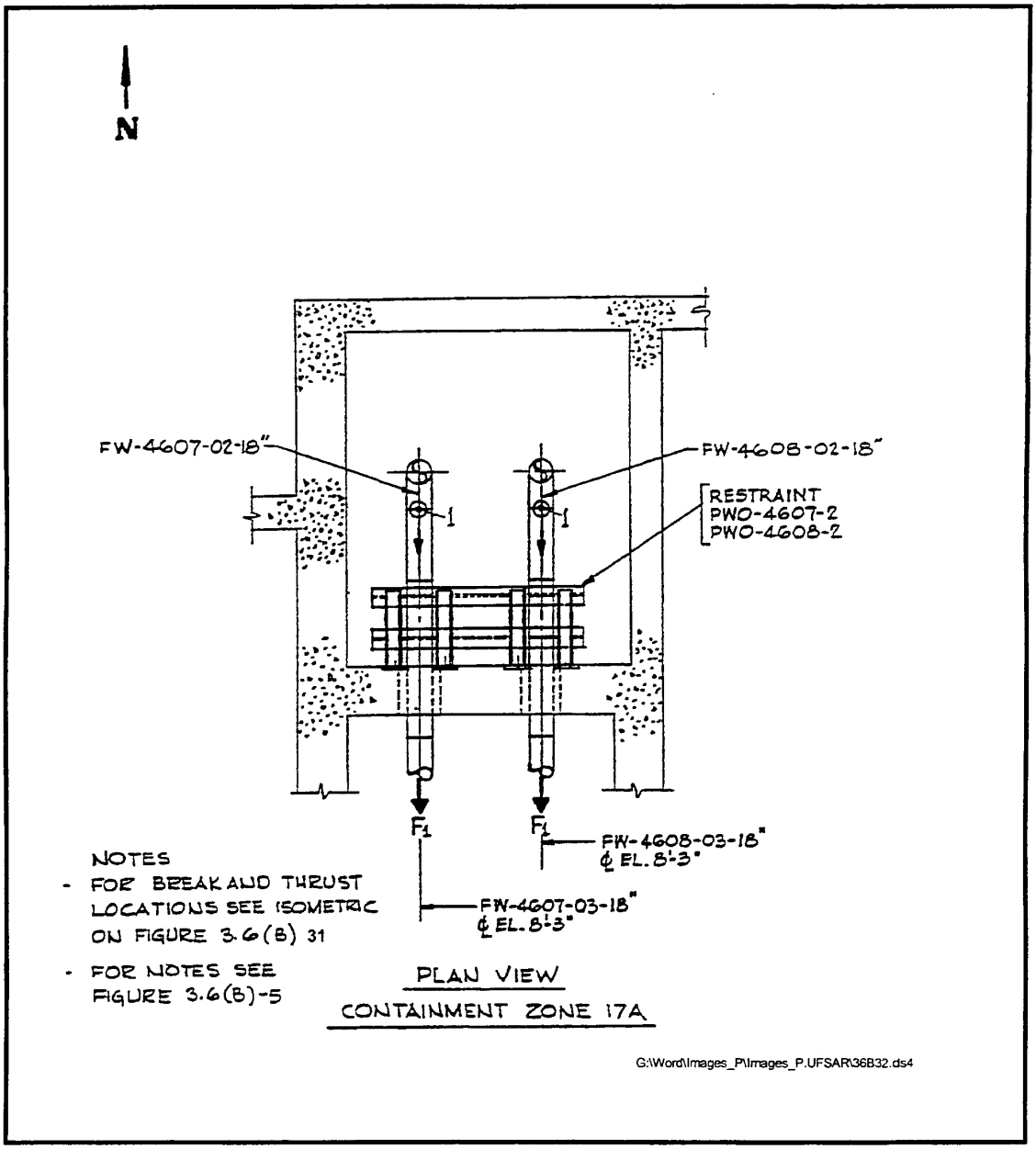

SEABROOK STATION UPDATED FINAL SAFETY ANALYSIS REPORT	Feedwater Pipe Whip Restraints Protecting Containment Liner and Penetrations - Containment Zone 17A	
		Figure 3.6(B)-32

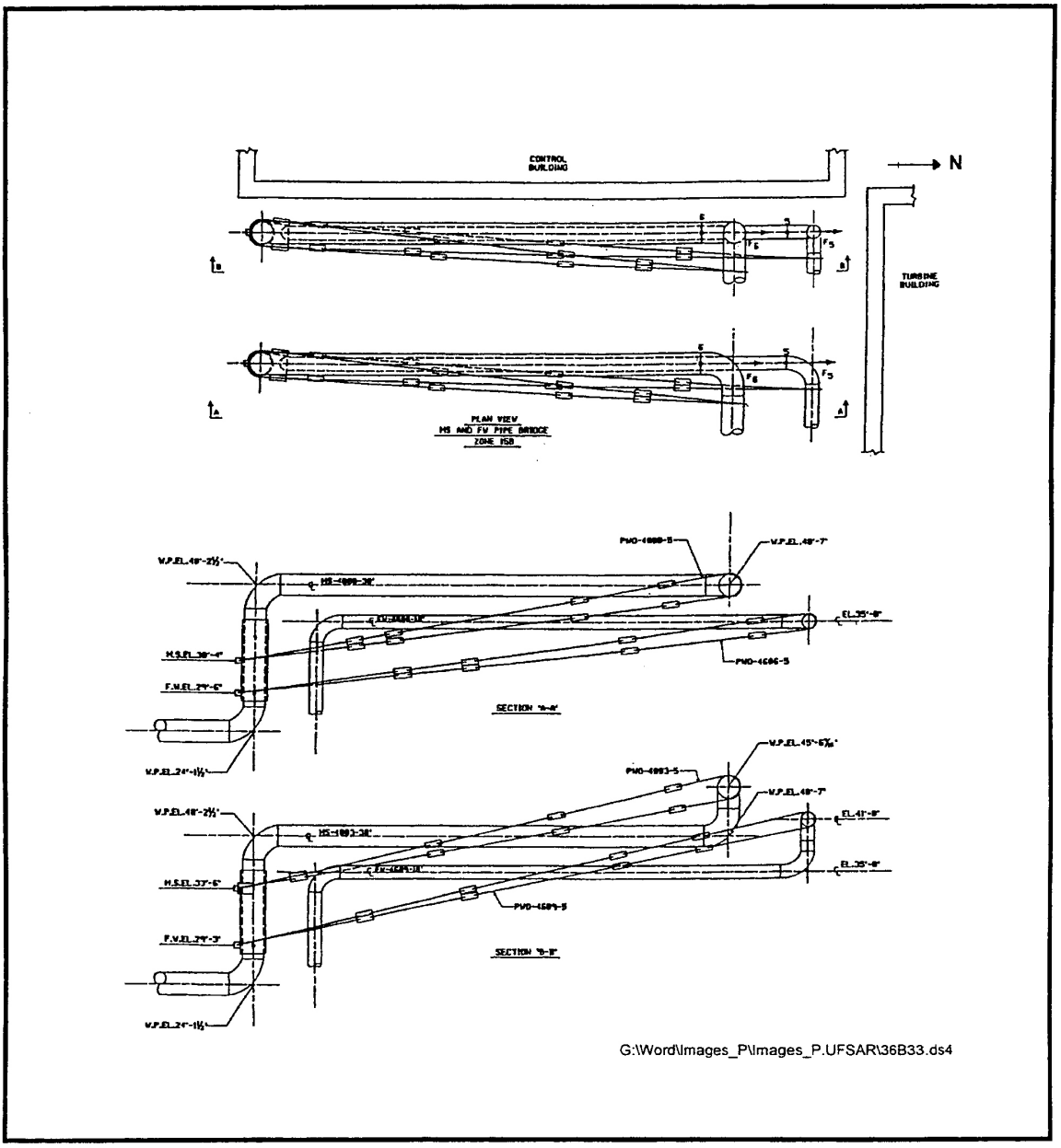

SEABROOK STATION UPDATED FINAL SAFETY ANALYSIS REPORT	Pipe Bridge West Main Steam and Feedwater Pipe Whip Restraints Protecting Turbine and Control Buildings	
		Figure 3.6(B)-33

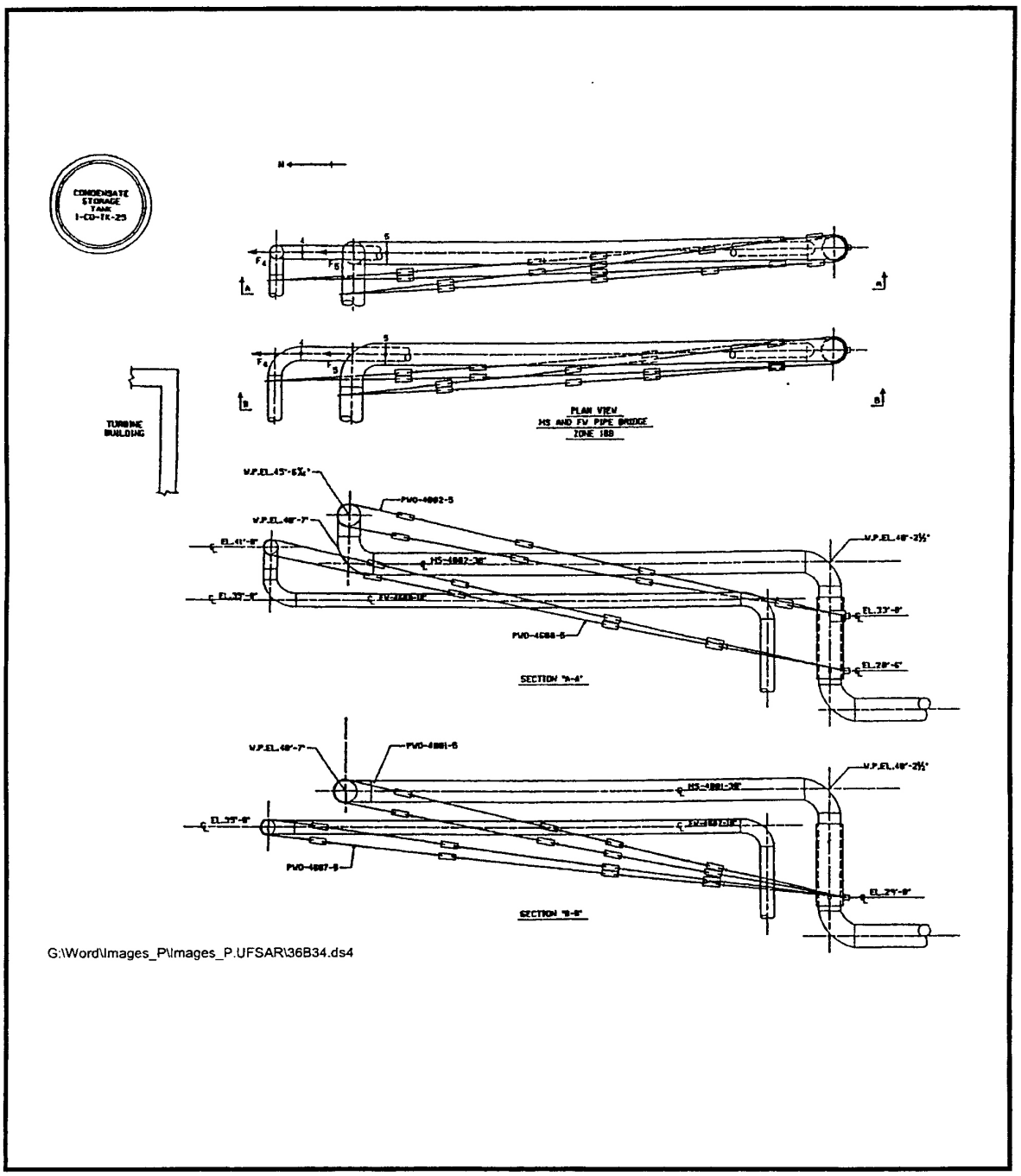

SEABROOK STATION UPDATED FINAL SAFETY ANALYSIS REPORT	Pipe Bridge East Main Steam and Feedwater Pipe Whip Restraints Protecting Turbine Building and Condensate Storage Tank	
		Figure 3.6(B)-34

CASE I

Outgoing Lines With Normally Closed Valve

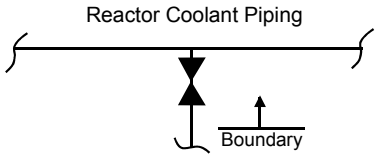

Note: Pressurizer Safety Valves Are Included Under This Case.

CASE II

Outgoing Lines With Normally Open Valve

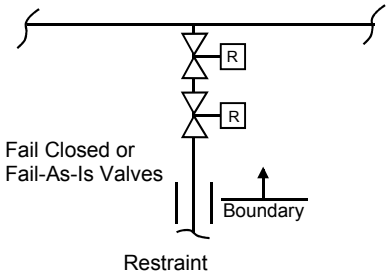

Note: The Reactor Coolant Pump No. 1 Seal Is Assumed To Be Equivalent To First Valve

CASE III

Incoming Lines Normally With Flow

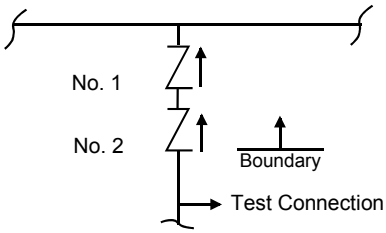

CASE IV

Incoming Lines Normally Without Flow

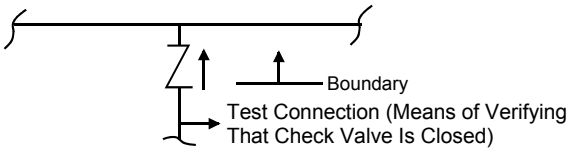

CASE V

All Instrumentation Tubing and Instruments Connected Directly to the Reacotor Coolant System is Considered as a Boundary. However, a Break Within this Boundary Results in a Relatively Small Flow Which Can Normally be Made Up With the Charging System.

G:\Word\Images_P\UFSAR\36N1.ds4

SEABROOK STATION UPDATED FINAL SAFETY ANALYSIS REPORT	Loss of Reactor Coolant Accident Boundary Limits	
		Figure 3.6(N)-1

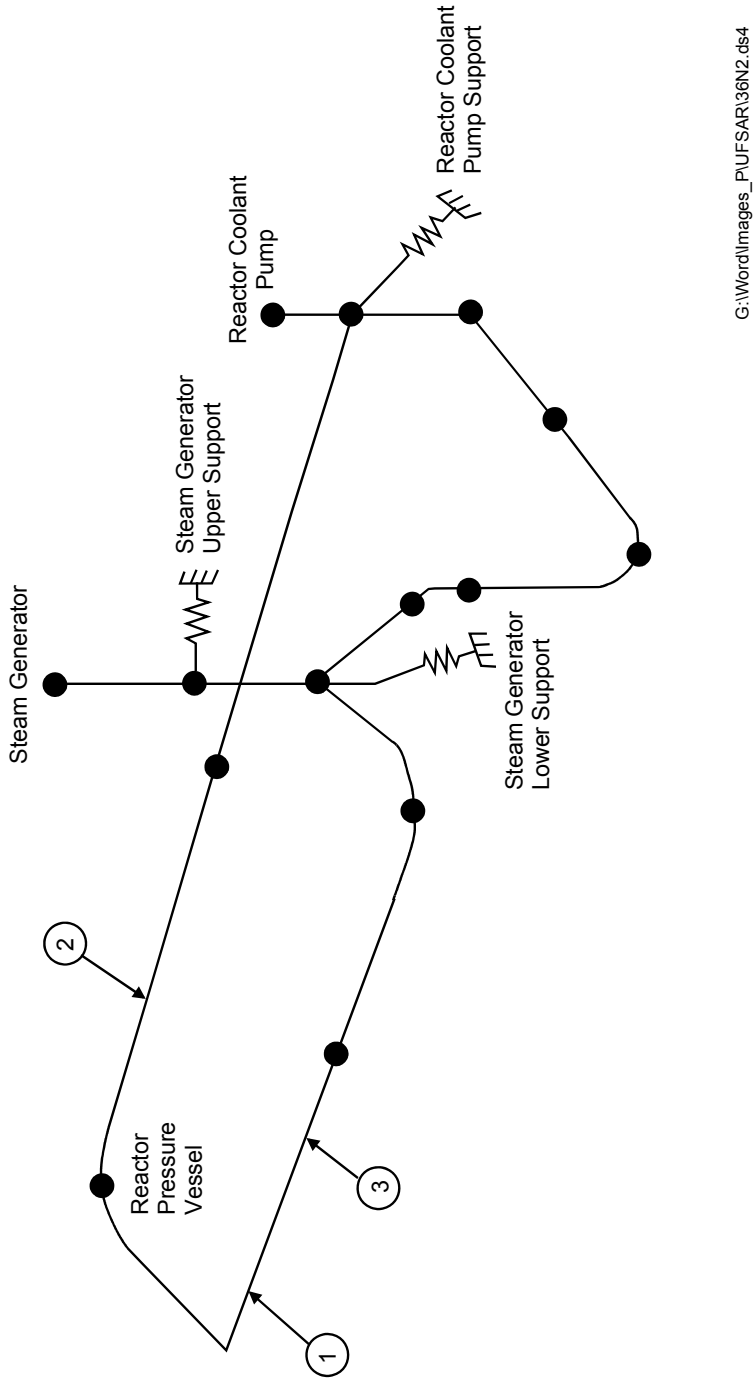

SEABROOK STATION UPDATED FINAL SAFETY ANALYSIS REPORT	Reactor Coolant System, Pipe Break and Whip Restraint Locations	
		Figure 3.6(N)-2