Materials Reliability Program: Pressurized Water Reactor Internals Inspection and Evaluation Guidelines (MRP-227, Revision 2)

2021 TECHNICAL REPORT

Materials Reliability Program: Pressurized Water Reactor Internals Inspection and Evaluation Guidelines (MRP-227, Revision 2)

All or a portion of the requirements of the EPRI Nuclear Quality Assurance Program apply to this product.

YES NO

EPRI Project Manager
K. Amberge

EPRI

3420 Hillview Avenue
Palo Alto, CA 94304-1338
USA

PO Box 10412
Palo Alto, CA 94303-0813
USA

800.313.3774
650.855.2121

askepri@epri.com

www.epri.com

3002020105
Final Report, September 2021

DISCLAIMER OF WARRANTIES AND LIMITATION OF LIABILITIES

THIS DOCUMENT WAS PREPARED BY THE ORGANIZATIONS NAMED BELOW AS AN ACCOUNT OF WORK SPONSORED OR COSPONSORED BY THE ELECTRIC POWER RESEARCH INSTITUTE, INC. (EPRI). NEITHER EPRI, ANY MEMBER OF EPRI, ANY COSPONSOR, THE ORGANIZATIONS BELOW, NOR ANY PERSON ACTING ON BEHALF OF ANY OF THEM:

(A) MAKES ANY WARRANTY OR REPRESENTATION WHATSOEVER, EXPRESS OR IMPLIED, (I) WITH RESPECT TO THE USE OF ANY INFORMATION, APPARATUS, METHOD, PROCESS, OR SIMILAR ITEM DISCLOSED IN THIS DOCUMENT, INCLUDING MERCHANTABILITY AND FITNESS FOR A PARTICULAR PURPOSE, OR (II) THAT SUCH USE DOES NOT INFRINGE ON OR INTERFERE WITH PRIVATELY OWNED RIGHTS, INCLUDING ANY PARTY'S INTELLECTUAL PROPERTY, OR (III) THAT THIS DOCUMENT IS SUITABLE TO ANY PARTICULAR USER'S CIRCUMSTANCE; OR

(B) ASSUMES RESPONSIBILITY FOR ANY DAMAGES OR OTHER LIABILITY WHATSOEVER (INCLUDING ANY CONSEQUENTIAL DAMAGES, EVEN IF EPRI OR ANY EPRI REPRESENTATIVE HAS BEEN ADVISED OF THE POSSIBILITY OF SUCH DAMAGES) RESULTING FROM YOUR SELECTION OR USE OF THIS DOCUMENT OR ANY INFORMATION, APPARATUS, METHOD, PROCESS, OR SIMILAR ITEM DISCLOSED IN THIS DOCUMENT.

REFERENCE HEREIN TO ANY SPECIFIC COMMERCIAL PRODUCT, PROCESS, OR SERVICE BY ITS TRADE NAME, TRADEMARK, MANUFACTURER, OR OTHERWISE, DOES NOT NECESSARILY CONSTITUTE OR IMPLY ITS ENDORSEMENT, RECOMMENDATION, OR FAVORING BY EPRI.

THE FOLLOWING ORGANIZATIONS, UNDER CONTRACT TO EPRI, PREPARED THIS REPORT:

MRP and PWROG Joint Reactor Internals Planning Team

THE TECHNICAL CONTENTS OF THIS PRODUCT WERE **NOT** PREPARED IN ACCORDANCE WITH THE EPRI QUALITY PROGRAM MANUAL THAT FULFILLS THE REQUIREMENTS OF 10 CFR 50, APPENDIX B. THIS PRODUCT IS **NOT** SUBJECT TO THE REQUIREMENTS OF 10 CFR PART 21.

NOTE

For further information about EPRI, call the EPRI Customer Assistance Center at 800.313.3774 or e-mail askepri@epri.com.

© 2021 Electric Power Research Institute (EPRI), Inc. All rights reserved. Electric Power Research Institute and EPRI are registered marks of the Electric Power Research Institute, Inc. in the U.S. and worldwide.

Acknowledgments

The following organizations, under contract to the Electric Power Research Institute (EPRI), prepared this report:

MRP and PWROG Joint Reactor Internals Planning Team:

Heather Malikowski, Chair	Exelon Nuclear
Tim Wells	Southern Nuclear Operating Co.
Rachel Doss	Duke Energy
Derek Simpson	America Electric Power
Steve Skubey	Wolf Creek Nuclear Operating Co.
Tim Hanna	Dominion Generation
Chris Koehler	Xcel Energy
Tom Malota	Arizona Public Service Co.
Mike Hoehn II	Ameren
Brian Burgos	EPRI Sr. Program Manager
Kyle Amberge	EPRI Technical Executive
Steve Fyfitch	Framatome Inc.
Sarah Davidsaver	Framatome Inc.
Ryan Hosler	Framatome Inc.
Bryan Wilson	Westinghouse Electric Co., LLC
Joshua McKinley	Westinghouse Electric Co., LLC
Taylor Zindren	Westinghouse Electric Co., LLC

This report describes research sponsored by EPRI.

This publication is a corporate document that should be cited in the literature in the following manner:

Materials Reliability Program: Pressurized Water Reactor Internals Inspection and Evaluation Guidelines (MRP-227, Revision 2).
EPRI, Palo Alto, CA: 2021.
3002020105.

Report Summary

The Electric Power Research Institute (EPRI) Materials Reliability Program (MRP) developed inspection and evaluation (I&E) guidelines for managing the long-term aging of reactor vessel internal components of pressurized water reactors (PWRs). Specifically, the guidelines are applicable to PWR internals structural components; they do not address fuel assemblies, reactivity control assemblies, or welded attachments to the reactor vessel. Revision 2 of this report updated the aging management guidelines for relevant operating experience and to address subsequent license renewal (SLR) operation. Revision 2 also added two new appendices to expand the options available to implementing utilities. These appendices include guidance on the implementation of alternate aging management approaches (other than inspection and evaluation) and guidance on showing continued applicability of the I&E guidelines for a plant using flexible operation for certain nuclear steam supply system (NSSS) designs.

Background

Demonstrating that the effects of aging degradation in PWR internals are adequately managed is essential for maintaining a healthy fleet and ensuring continued functionality of PWR internals. As a work product of the MRP, these I&E guidelines are intended to support that demonstration, with requirements for various inspections to detect effects of aging degradation. The program to develop and maintain these guidelines is organized around a framework and strategy for managing effects of aging in PWR internals and is supported by a substantial database of material data and evaluation results. The goal of this development was primarily to support license renewal for the first and subsequent periods of extended operation. The requirements contained in this document are applicable to Babcock & Wilcox (B&W), Combustion Engineering (CE), and Westinghouse NSSS "Generation II" PWR designs in the United States, where construction began prior to 2007.

Objectives

- To provide generic I&E guidelines for each PWR design for use by individual plant owners in developing engineering programs to manage aging in PWR internals
- To evaluate PWR internals for all three PWR designs currently operating in the United States and internationally, and to make recommendations for aging management actions specific to each component
- To support the industry in preparing PWR internals aging management programs to satisfy license renewal commitments
- To provide guidance for implementation of alternate aging management strategies and determination of guideline applicability at plants using flexible operation

Approach

An experienced team consisting of utility and NSSS vendors and EPRI experts, representing a broad spectrum of reactor design, operations, inspection, and materials expertise, worked on the project. The team developed screening criteria with susceptibility levels for the eight postulated aging mechanisms relevant to PWR internals and their effects and updated those screening criteria based on the latest research and the need to extend operation for SLR. Initial component screening and categorization were completed using susceptibility levels and a failure modes, effects, and criticality analysis to identify the relative ranking of components. The team also completed engineering evaluations and safety assessments of degradation for components and assemblies of components. Aging management strategy development, combining results of the engineering evaluations and safety assessments with component accessibility, operating experience, existing evaluations, and prior examination results, was completed to determine the appropriate aging management methodology, baseline examination timing, and the need for and the timing of subsequent inspections. Inputs such as accumulated neutron radiation dose were updated for all these engineering evaluations and safety assessments to address SLR operation. Revision 2 of this report also included alternate aging management strategy guidance and flexible operation applicability guidance.

Results

One “mandatory” and four “needed” Nuclear Energy Institute (NEI) 03-08 implementation requirements have been developed. These requirements provide the framework and details for individual utility engineering programs for managing aging in reactor internal components and the development of AMPs to support license renewal.

Applications, Value, and Use

The guidelines are based on a broad set of assumptions about plant operation, which, with some exceptions, encompass the range of current plant conditions for the U.S. fleet of PWRs. The aging management strategies reports (MRP-231 and MRP-232) provide the basis for these guidelines. The functional evaluations that support the guidelines were based on representative configurations and operational histories, which were generally conservative, but not necessarily bounding in every parameter. These assumptions are a conservative representation of U.S. PWR operating plants, all of which implemented low-leakage core-loading patterns early in their operating life. The recommendations are thus applicable to all U.S. PWR operating plants as of November 2017 for the three designs identified. These guidelines are also considered applicable to plants that have replaced components or component assemblies; however, alternatives can be technically justified, as described in Appendix C. The inspection standard for PWR internals (MRP-228) is the companion document to these I&E guidelines, and it provides examination requirement standards for components listed in these guidelines.

The technical bases for implementing the recommendations in this topical report, depending on plant design and other factors, include the following EPRI Licensed reports: MRP-134, MRP-135, MRP-175, MRP-191, MRP-228, MRP-230, MRP-232, MRP-276, MRP-376, and other members-only MRP reports.

Keywords

Aging management
Inspection guidelines
License renewal
Pressurized water reactor
Reactor internals
Subsequent license renewal

Deliverable Number: 3002020105

Product Type: Technical Report

Product Title: Materials Reliability Program: Pressurized Water Reactor Internals Inspection and Evaluation Guidelines (MRP-227, Revision 2)

PRIMARY AUDIENCE: Program engineers at pressurized water reactor (PWR) utilities

SECONDARY AUDIENCE: In-service inspection engineers

KEY RESEARCH QUESTION

The current generation of PWR plants are approaching the end of their respective licensing periods, and some plants have already entered their periods of extended operation. The nuclear power industry in the United States developed inspection and evaluation (I&E) guidelines for managing the long-term aging of PWR internals components of pressurized water reactors. Revision 2 of these guidelines provides updates based on the latest applicable operating experience and extends the applicability of the guidelines to subsequent license renewal (SLR). As a living program, the I&E guidelines will continue to be periodically updated.

RESEARCH OVERVIEW

An experienced team consisting of utility and nuclear steam supply system (NSSS) vendors and EPRI experts, representing a broad spectrum of reactor design, operations, and materials expertise, worked on the project. The team developed screening criteria with susceptibility levels for the eight postulated aging mechanisms relevant to PWR internals and their effects and updated those screening criteria based on the latest research and the need to extend operation for SLR. Initial component screening and categorization were completed using susceptibility levels and a failure modes, effects, and criticality analysis to identify the relative ranking of components. The team also completed engineering evaluations and safety assessments of degradation for components and assemblies of components. Aging management strategy development, combining results of the engineering evaluations and safety assessments with component accessibility, operating experience, existing evaluations, and prior examination results, was completed to determine the appropriate aging management methodology, baseline examination timing, and the need for and the timing of subsequent inspections. Inputs such as accumulated neutron radiation dose were updated for the engineering evaluations and safety assessments to address SLR operation. Revision 2 of this report also includes alternate aging management strategy guidance and flexible operation applicability guidance.

KEY FINDINGS

- Generic I&E guidelines are provided for each PWR design for use by individual plant owners in developing engineering programs to manage aging in PWR internals.
- Recommendations for aging management actions specific to each component are provided for the PWR internals of all three PWR designs currently operating in the United States.
- Support is provided for preparing PWR internals aging management programs (AMPs) to satisfy license renewal commitments.
- One “mandatory” and four “needed” Nuclear Energy Institute (NEI) 03-08 implementation requirements have been developed.

The technical bases for implementing the recommendations in this topical report, depending on plant design and other factors, include the following EPRI Licensed reports: MRP-134, MRP-135, MRP-175, MRP-191, MRP-228, MRP-230, MRP-232, MRP-276, MRP-376, and other members-only MRP reports.

- Guidance for evaluating potential alternative aging management strategies and their impact on the I&E guidelines and aging management program were developed.
- Previous interim guidance on evaluating the continued applicability of the I&E guidelines for plants implementing flexible operation has been added.

WHY THIS MATTERS

Demonstration that the effects of aging degradation in PWR internals are adequately managed is essential for maintaining a healthy fleet and ensuring continued functionality of the PWR internals for the first period of extended operation and SLR. As a work product of the EPRI Materials Reliability Program (MRP), these I&E guidelines are intended to support that demonstration, with requirements for various inspections to detect the effects of aging degradation. These guidelines are provided to individual plant owners for use in preparing and executing their PWR internals AMPs.

HOW TO APPLY RESULTS

The guidelines are based on a broad set of assumptions about plant operation, which, with some exceptions, encompass the range of current plant conditions for the U.S. fleet of PWRs. The aging management strategies reports (MRP-231 and MRP-232) provide the basis for these guidelines. The functional evaluations that support the guidelines were based on representative configurations and operational histories, which were generally conservative, but not necessarily bounding in every parameter. These assumptions are a conservative representation of U.S. PWR operating plants, all of which implemented low-leakage core-loading patterns early in their operating life. The recommendations are thus applicable to all U.S. PWR operating plants as of November 2017 for the three designs identified. These guidelines are also considered applicable to plants that have replaced components or component assemblies; however, alternatives can be technically justified. The inspection standard for PWR internals (MRP-228) is the companion document to these I&E guidelines; it provides examination requirement standards for components listed in the guidelines.

LEARNING AND ENGAGEMENT OPPORTUNITIES

MRP Assessment and Inspection Technical Advisory Committees

EPRI CONTACT: Kyle Amberge, Principal Technical Leader, kamberge@epri.com

PROGRAMS: Nuclear Power, P41; and Pressurized Water Reactor Materials Reliability Program (MRP), P41.01.04

IMPLEMENTATION CATEGORY: Technical Basis Report, Reference

EPRI
3420 Hillview Avenue, Palo Alto, California 94304-1338 • PO Box 10412, Palo Alto, California 94303-0813 USA
800.313.3774 • 650.855.2121 • askepri@epri.com • www.epri.com
© 2021 Electric Power Research Institute (EPRI), Inc. All rights reserved. Electric Power Research Institute and EPRI are registered marks of the Electric Power Research Institute, Inc. in the U.S. and worldwide.

Acronym List

A/LAI	Applicant/licensee action item
AMP	Aging management program
ANO-1	Arkansas Nuclear One Unit 1
ARDM	Age-related degradation mechanism
ASME	American Society of Mechanical Engineers
B&PV	Boiler and Pressure Vessel (Code)
B&W	Babcock & Wilcox
BB	Baffle-to-baffle
BFB	Baffle-former bolt
BMI	Bottom-mounted instrumentation
BWR	Boiling water reactor
BWRVIP	Boiling Water Reactor Vessel and Internals Project
CAP	Corrective action program
CASS	Cast austenitic stainless steel
CB	Core barrel
CE	Combustion Engineering
CEA	Control element assembly
CFR	Code of Federal Regulations
CGR	Crack growth rate
CR-3	Crystal River Unit 3
CRDM	Control rod drive mechanism

CRGT	Control rod guide tube
CSA	Core support assembly
CSB	Core support barrel
CSBFW	Core support barrel flexure weld
CSS	Core support shield
CUF	Cumulative usage factor
CW	Cold-worked
DB	Davis-Besse
E	Expansion, I&E Guidelines Component Group
EAF	Environmentally assisted fatigue
ECT	Eddy current testing
EFPY	Effective full power years
EPFM	Elastic-plastic fracture mechanics
EPRI	Electric Power Research Institute
EPU	Extended power uprate
ET	Electromagnetic testing (eddy current)
EVT	Enhanced visual testing (a visual NDE method that includes EVT-1)
FB	Baffle-to-former
FD	Flow distributor
FEM	Finite element model
FME	Foreign material exclusion
FMECA	Failure mode, effects, and criticality analysis
GALL	Generic Aging Lessons Learned
HAZ	Heat-affected zone
HWC	Hydrogen water chemistry

I&E	Inspection and evaluation
IASCC	Irradiation-assisted stress corrosion cracking
IC	Irradiation-enhanced creep
ICI	In-core instrumentation
ID	Inner diameter
IE	Irradiation embrittlement
IGSCC	Intergranular SCC
IMI	In-core monitoring instrumentation
IN	Information Notice
IP	Issue program
IPA	Integrated plant assessment
ISI	In-service inspection
ISR	Irradiation-enhanced stress relaxation
ITG	Issue Task Group
JOBB	Joint owners baffle bolt
LAW	Lower (core barrel) axial weld
LCB	Lower core barrel
LCP	Lower core plate
LEFM	Linear elastic fracture mechanics
LFW	Lower flange weld
LGW	Lower girth weld
LRSS	Lower radial support system
LTS	Lower thermal shield
LOCA	Loss-of-coolant accident
MRP	Materials Reliability Program

N	No Additional Measures, I&E Guidelines Component Group
NDE	Nondestructive examination
NEI	Nuclear Energy Institute
NRC	U.S. Nuclear Regulatory Commission
NSAL	Nuclear Safety Advisory Letter
NSSS	Nuclear steam supply system
OBE	Operating basis earthquake
OD	Outer diameter
OE	Operating experience
OEM	Original equipment manufacturer
ONS	Oconee Nuclear Station (ONS-1, ONS-2, and ONS-3)
P	Primary, I&E Guidelines Component Group
PH	Precipitation-hardenable (via heat treatment)
PMMP	Preventive Maintenance Management Program
PWR	Pressurized water reactor
PWROG	Pressurized Water Reactor Owners Group
PWSCC	Primary water SCC
RAI	Request for additional information
RCCA	Rod cluster control assembly
RCS	Reactor coolant system
RI	Reactor internals
RV	Reactor vessel
RVI	Reactor vessel internals
SA	Solution-annealed
SCC	Stress corrosion cracking

SE	Safety evaluation
SLR	Subsequent license renewal
S/N	Serial number
SS	Stainless steel
SSE	Safe shutdown earthquake
SSHT	Surveillance specimen holder tube
TE	Thermal aging embrittlement
TLAA	Time-limited aging analysis
UCB	Upper core barrel
UCP	Upper core plate
UFW	Upper flange weld
UGW	Upper girth weld
U.S.	United States
USP	Upper support plate
UT	Ultrasonic testing (a volumetric NDE method)
UTS	Upper thermal shield
VS	Void swelling
VT	Visual resting (a visual NDE method that includes VT-1 and VT-3)
X	Existing, I&E Guidelines Component Group
XL	Extra-long Westinghouse fuel

Unit Conversions

1 psi = 6,895 Pa = 6.895×10^{-3} MPa

1 Btu = 1,055 J

1 Btu/s-in^3 = 6.438×10^7 W/m^3

1 Btu/s-in^2-^{o}F = 2.944×10^6 W/m^2-^{o}C

Record of Revision

0	Original issue.
0, A	This revision incorporates the topical report conditions resulting from the NRC Safety Evaluation Review and responses to associated requests for additional information (see Appendix B). It also contains minor editorial corrections identified since the original issuance of the guidelines.
1	This incorporates recent changes as agreed up revision on by EPRI MRP Reactor Internals Core Team writers and provides updates based on the NRC Safety Evaluation Review for MRP-227, Revision 0, as well as operating experience and new knowledge gained from various materials testing, modeling, and research projects.
1, A	This revision incorporates the topical report conditions resulting from the NRC Safety Evaluation Review of MRP-227 Revision 1 and responses to associated requests for additional information (see Appendix D). It also contains minor editorial corrections identified since the original issuance of the guidelines. See Appendix C for detailed changes to the guidelines.
2	This revision updates the guidance for the latest operating experience and extends the applicability to subsequent license renewal. Appendices for alternate aging management approaches, flexible operation guidance, and incorporation of SLR interim guidance were also added.

Table of Contents

Abstract ..... **V**

Executive Summary ..... **VII**

Acronym List ..... **XI**

Unit Conversions ..... **XXI**

Record of Revision ..... **XVII**

Section 1: Executive Summary **1-1**

Section 2: Introduction **2-1**
2.1 Background 2-1
2.2 Aging Management Strategy Development 2-3
2.3 Scope 2-4
2.4 Guideline Applicability 2-6

Section 3: Component Categorization and Aging Management Strategy Development **3-1**
3.1 Design Characteristics Summary 3-1
3.1.1 B&W Internals Design Characteristics 3-1
3.1.2 Internals Design Characteristics 3-5
3.1.3 Westinghouse Internals Design Characteristics 3-9
3.2 Initial Screening Summary 3-13
3.2.1 Stress Corrosion Cracking 3-14
3.2.2 Irradiation-Assisted Stress Corrosion Cracking 3-14
3.2.3 Wear 3-14
3.2.4 Fatigue 3-14
3.2.5 Thermal Aging Embrittlement 3-15
3.2.6 Irradiation Embrittlement 3-15
3.2.7 Void Swelling and Irradiation Growth 3-15
3.2.8 Thermal and Irradiation-Enhanced Stress Relaxation or Irradiation-Enhanced Creep 3-16

3.3 Component Categorization and Aging Management Strategy Development Results Summary 3-16
3.3.1 Method and Definitions 3-16
3.3.2 Results of Categorization and Aging Management Strategy Development 3-18

Section 4: PWR Internals Management Requirements 4-1
4.1 Aging Management Approach 4-3
4.1.1 PWR Internals Categorization and Aging Management Strategy Development 4-3
4.1.2 Selection of Established Aging Management Methods 4-3
4.1.3 Aging Management Method Qualification 4-3
4.1.4 Implementation of Aging Management Requirements 4-4
4.2 Inspection Methods for Monitoring Aging 4-4
4.2.1 Visual (VT-3) Examination 4-4
4.2.2 Visual (VT-1 and EVT-1) Examinations 4-6
4.2.3 Nonqualified Visual Inspection 4-7
4.2.4 Surface Examination 4-7
4.2.5 Volumetric Examination 4-7
4.2.6 Physical Measurements 4-8
4.2.7 Subsequent Examination Intervals 4-8
4.2.8 Coordination with ASME Section XI Code Requirements 4-8
4.3 Primary and Expansion Component Requirements 4-9
4.4 Existing Programs Component Requirements 4-44
4.4.1 B&W Components 4-45
4.4.2 Components 4-45
4.4.3 Westinghouse Components 4-46
4.5 No Additional Measures Components 4-47

Section 5: Examination Acceptance Criteria and Expansion Criteria 5-1
5.1 Examination Acceptance Criteria 5-1
5.1.1 Visual (VT-3) Examination 5-1
5.1.2 Visual (VT-1) Examination 5-1
5.1.3 Enhanced Visual (EVT-1) Examination 5-2
5.1.4 Nonqualified Visual Inspection 5-2
5.1.5 Surface Examination 5-2
5.1.6 Volumetric Examination 5-3

5.2 Physical Measurements Examination Acceptance Criteria 5-4
5.3 Expansion Criteria 5-4

Section 6: Evaluation Methodologies 6-1

Section 7: Implementation Requirements 7-1
7.1 NEI 03-08 Implementation Protocol 7-1
7.2 Aging Management Requirement 7-2
7.3 Reactor Internals Guidelines Implementation Requirement 7-2
7.4 Examination Procedures Requirement 7-3
7.5 Examination Results Requirement 7-3
7.6 Results Reporting Requirement 7-3

Section 8: References 8-1

Appendix A: Reactor Internals Operational Experience A-1

Appendix B: Guidance on Plant-Specific Applicability Related to Fuel Design or Fuel Management B-1

Appendix C: Options for Alternate Aging Management Approaches for Westinghouse and CE Designs C-1

Appendix D: Guidance for Flexible Power Operation of Westinghouse and CE Designs D-1

Appendix E: Incorporation of Interim Guidance from MRP 2018-022 into MRP-227, Revision 2 ..... E-1

Appendix F: Summary of Changes to Document F-1

List of Figures

Figure 2-1 MRP framework and strategy for aging management of PWR internals 2-3

Figure 2-2 Links between categorization, analysis, aging management strategy development, and the I&E guidelines 2-5

Figure 3-1 Overview of typical B&W internals 3-3

Figure 3-2 Overview of typical CE internals 3-6

Figure 3-3 Typical CE welded core shroud designs assembled in two vertical sections 3-8

Figure 3-4 Typical CE welded core shroud with full height panels 3-8

Figure 3-5 Overview of typical Westinghouse internals 3-10

Figure 4-1 Typical upper internals arrangement for B&W-designed PWRs 4-53

Figure 4-2 Typical internals core barrel arrangement for B&W-designed PWRs 4-54

Figure 4-3 Typical lower internals arrangement for B&W-designed PWRs 4-55

Figure 4-4 Typical guide block and shock pad locations for B&W-designed PWRs 4-56

Figure 4-5 Typical control rod guide tube (CRGT) for B&W-designed PWRs 4-57

Figure 4-6 Typical lower grid assembly and lower grid fuel assembly support pads for B&W-designed PWRs .. 4-57

Figure 4-7 Typical upper thermal shield bolts and upper core barrel bolts for B&W-designed PWRs 4-58

Figure 4-8 Typical (a) lower thermal shield bolts and lower core barrel bolts, (b) lower thermal shield studs/nuts, lower core barrel bolts, flow distributor bolts, and (c) surveillance specimen holder tube bolts for B&W-designed PWRs 4-59

Figure 4-9 Typical vent valve assembly (outside view) for B&W-designed PWRs 4-61

Figure 4-10 Typical vent valve assembly (inside view) for B&W-designed PWRs 4-61

Figure 4-11 Typical core barrel assembly (cutaway view) for B&W-designed PWRs..... 4-62

Figure 4-12 Typical (a) overall core support shield assembly, B&W-designed PWRs and (b) item B20.2. core support shield top flange with examination coverage highlighted..... 4-63

Figure 4-13 Typical plenum cover weldment ribs to each other, example weld location— B&W-designed PWRs . 4-64

Figure 4-14 Typical upper grid fuel assembly support pads—B&W-designed PWRs..... 4-65

Figure 4-15 Typical CE-design core shroud assembly assembly and core shroud plate–former plate weld..... 4-66

Figure 4-16 Typical CE-design core shroud assembly shroud plates..... 4-67

Figure 4-17 Typical CE-design core support barrel assembly—welds, upper cylinder, upper core barrel flange, core barrel assembly axial welds, lower core barrel flange 4-68

Figure 4-18 Typical CE-design core support barrel assembly CSB flexure weld 4-69

Figure 4-19 Typical CE-design upper internals assembly fuel alignment plate..... 4-69

Figure 4-20 Typical CE-design control element assembly instrument guide tubes 4-70

Figure 4-21 Typical CE-design lower support structure deep beams 4-71

Figure 4-22 Typical CE-design lower support structure: lower core support beams, core support plate, and core support columns..... 4-72

Figure 4-23 Typical CE-design core shroud assembly (welded full-height) core shroud assembly 4-73

Figure 4-24 Typical CE-design core shroud assembly (welded) core shroud tie rods and nuts 4-74

Figure 4-25 Typical CE-design CEA shroud assemblies and CEA shroud bolts 4-75

Figure 4-26 Typical CE-design core shroud assembly guide lugs, guide lug inserts, and guide lug bolts 4-76

Figure 4-27 Typical CE-design lower support structure fuel alignment pins 4-77

Figure 4-28 Typical CE-design core-stabilizing lugs and shims and core-stabilizing lug shim bolts 4-78

Figure 4-29 Typical CE-design in-core instrumentation thimble tubes—lower 4-79

Figure 4-30 Typical Westinghouse-design control rod guide tube assembly guide plates 4-80

Figure 4-31 Typical Westinghouse-design control rod guide tube assembly lower flange welds, C-tubes, and sheaths 4-80

Figure 4-32 Typical Westinghouse-design core barrel assembly core barrel welds 4-81

Figure 4-33 Typical Westinghouse-design baffle-former assembly baffle-edge bolts 4-82

Figure 4-34 Typical Westinghouse-design baffle-former assembly baffle-former bolts 4-82

Figure 4-35 Typical Westinghouse-design baffle-former assembly 4-83

Figure 4-36 Typical Westinghouse-design alignment and interfacing components internals hold-down spring 4-84

Figure 4-37 Typical Westinghouse-design thermal shield assembly thermal shield flexures 4-85

Figure 4-38 Typical Westinghouse-design upper internals assembly upper core plate 4-86

Figure 4-39 Typical Westinghouse-design lower internals assembly lower support forging or castings 4-87

Figure 4-40 Typical Westinghouse-design core barrel assembly barrel-former bolts 4-88

Figure 4-41 Typical Westinghouse-design lower support assembly lower support column bolts 4-89

Figure 4-42 Typical Westinghouse-design lower support assembly lower support column bodies 4-89

Figure 4-43 Typical Westinghouse-design lower support assembly bottom-mounted instrumentation column bodies and cruciforms 4-90

Figure 4-44 Typical Westinghouse-design upper support ring or skirt 4-91

Figure 4-45 Typical Westinghouse-design clevis insert and clevis insert bolts 4-91

Figure 4-46 Typical Westinghouse-design upper core plate alignment pins 4-92

Figure 4-47 Typical Westinghouse-design upper fuel alignment pins and lower fuel alignment pins 4-93

Figure 4-48 Typical Westinghouse-design upper core plate inserts 4-93

Figure 4-49 Typical Westinghouse-design radial support keys 4-94

Figure 4-50 Typical Westinghouse-design thermal sleeves 4-95

List of Tables

Table 3-1 Final disposition of non-Category A component items and welds in B&W PWR internals 3-19

Table 3-2 Final disposition of component items and welds in CE PWR internals 3-26

Table 3-3 Final disposition of component items and welds in Westinghouse PWR internals 3-29

Table 4-1 B&W plants Primary components 4-12

Table 4-2 CE plants Primary components..... 4-22

Table 4-3 Westinghouse plants Primary components 4-27

Table 4-4 B&W plants Expansion components 4-31

Table 4-5 CE plants Expansion components..... 4-37

Table 4-6 Westinghouse plants Expansion components..... 4-40

Table 4-7 B&W plants Existing Programs components..... 4-45

Table 4-8 CE plants Existing Programs components 4-48

Table 4-9 Westinghouse plants Existing Programs components..... 4-50

Table 5-1 B&W plants examination acceptance and expansion criteria 5-2

Table 5-2 CE plants examination acceptance and expansion criteria 5-15

Table 5-3 Westinghouse plants examination acceptance and expansion criteria..... 5-20

Table D-1 Fatigue operational limits for cases with edge bolts installed..... D-5

Table D-2 Fatigue operational limits for cases with no edge bolts installed D-5

Table D-3 Westinghouse RVI components screened in for fatigue D-6

Table E-1 Suggested entry for Westinghouse clevis insert bolts and dowels from MRP 2018-022 .....E-2

Table E-2 Final MRP-227, Revision 2 entry for clevis insert bolts.....E-2

Table E-3 Suggested entry for Westinghouse thermal sleeves from MRP 2018-022 .....E-3

Table E-4 Final MRP-227, Revision 2 entry for Westinghouse thermal sleeves E-3

Table E-5 Suggested entry for Westinghouse radial support keys from MRP 2018-022.....E-4

Table E-6 Final MRP-227, Revision 2 entry for Westinghouse radial support keys.....E-4

Table E-7 Suggested entry for Westinghouse clevis bearing Stellite wear surfaces from MRP 2018-022 .....E-4

Table E-8 Suggested entry for Westinghouse bracket bolts and corner bolts from MRP 2018-022.....E-5

Table E-9 Final MRP-227, Revision 2 entry for Westinghouse bracket bolts and corner bolts E-6

Table E-10 Suggested entry for Westinghouse upper and lower fuel alignment pins from MRP 2018-022 .....E-6

Table E-11 Final MRP-227, Revision 2 entry for Westinghouse upper fuel alignment pins.....E-7

Table E-12 Suggested entry for CE core shroud assembly from MRP 2018-022 .....E-7

Table E-13 Final MRP-227, Revision 2 entry for CE core shroud assembly E-8

Table E-14 Suggested entry for CE lower cylinder girth welds from MRP 2018-022 .....E-8

Table E-15 Final MRP-227, Revision 2 entry for CE core support barrel middle girth weld E-9

Table E-16 Suggested entry for CE core shroud tie rods from MRP 2018-022 .....E-9

Table E-17 Final MRP-227, Revision 2 entry for CE core shroud tie rods and nuts.....E-10

Table E-18 Suggested entry for CE core stabilizing lug shim bolts from MRP 2018-022 .....E-10

Table E-19 Final MRP-227, Revision 2 entry for CE core stabilizing lugs, shims, and lug shim bolts E-11

Table E-20 Suggested entry for CE fuel alignment plate from MRP 2018-022 ..... E-11

Table E-21 Final MRP-227, Revision 2 entry for CE fuel alignment plate E-12

Table E-22 Suggested entry for CE lower cylinder girth welds examination acceptance criteria from MRP 2018-022 ..... E-13

Table E-23 Final MRP-227, Revision 2 entry for CE middle girth weld E-14

Section 1: Executive Summary

Demonstration that the effects of aging degradation in pressurized water reactor (PWR) internals are adequately managed is essential for maintaining a healthy fleet and ensuring continued functionality of the PWR internals. As a work product of the Electric Power Research Institute (EPRI) Materials Reliability Program (MRP), these inspection and evaluation (I&E) guidelines are intended to support that demonstration, with requirements for inspection to detect the effects of aging degradation. These guidelines are provided to individual plant owners for use in preparing and executing their PWR internals aging management programs for first license renewal and subsequent license renewal (SLR). These guidelines contain mandatory and needed requirements that must be implemented according to the Materials Initiative [1]. Section 7 describes the requirements of the guidelines, including an implementation schedule. The requirements contained in this document are applicable to Babcock & Wilcox (B&W), Combustion Engineering (CE), and Westinghouse nuclear steam supply system (NSSS) Generation II PWR designs in the United States where construction began prior to 2007.

These guidelines are not intended to reduce, alter, or otherwise affect current American Society of Mechanical Engineers (ASME) Boiler and Pressure Vessel (B&PV) Code Section XI [2] or plant-specific licensing in-service inspection requirements. When ASME Code Section XI examinations are credited for aging management as "Existing Programs," these guidelines provide the specificity considered necessary to ensure that the examinations meet the intent for which they are credited.

The program to develop and maintain these guidelines has been under way since the mid-2000s. It is organized around a framework and strategy for managing the effects of aging in PWR internals and is supported by a substantial database of material data and evaluation results. The key sequential steps included the following:

- Development of screening criteria, with susceptibility levels for the eight postulated aging mechanisms relevant to PWR internals and their effects
- Initial component screening and categorization, using the susceptibility levels to identify the relative susceptibility of the components
- Engineering evaluations and safety assessments of degradation for components and assemblies of components

- Aging management strategy development, combining the results of engineering evaluations and safety assessments with component accessibility, operating experience, existing evaluations, and prior examination results to determine the appropriate aging management methodology, baseline examination timing, and the need for and the timing of subsequent inspections

Through this process, the PWR internals for each PWR design were assigned to one of the following four groups: Primary, Expansion, Existing Programs, and No Additional Measures components. Definitions and recommendations for aging management actions specific to each group are provided in Sections 3 and 4.

The aging management elements needed for Primary and Expansion components were selected from existing, well-proven visual, surface, and volumetric examination methodologies that have been subject to widespread, relevant application. Each component in the Primary and Expansion groups was then assessed in terms of the degradation effect (for example, cracking caused by particular mechanisms, loss of material caused by wear), appropriate examination methodology for detection of that effect, accessibility of that component for the examination method selected, and industry experience with those examinations. The inspection standard for PWR internals (MRP-228) [3] is the companion document to these I&E guidelines and provides the examination requirement standards for the components listed here.

The Primary component requirements are listed in Table 4-1, Table 4-2, and Table 4-3 for the B&W, CE, and Westinghouse designs, respectively. The Expansion component requirements are listed in Table 4-4, Table 4-5, and Table 4-6 for the B&W, CE, and Westinghouse designs, respectively. These tables provide the assembly/subassembly/component description, the relevant degradation effect and associated degradation mechanism, any link between a Primary component and a related Expansion component, the examination method, examination coverage, initial examination baseline schedule requirements, and examination frequency.

The Existing Programs component requirements are listed in Table 4-8 and Table 4-9 for the CE and Westinghouse designs, respectively. There are no Existing Programs components for B&W plants. These tables and the supporting text identify the components and the references to the existing programs.

Tables are not provided for the No Additional Measures components. This group of components has been determined to need no additional aging management. However, for components in the No Additional Measures group that are classified as core support structures in plant-specific documentation, the in-service inspection (ISI) requirements of ASME Code Section XI, Subsection IWB, Examination Category B-N-3 [2] must continue to be met, unless specific relief is granted as allowed by

Title 10 Part 50.55a [4] of the Code of Federal Regulations (10 CFR 50.55a) or plant-specific licensing documentation. See MRP-231 [15] and MRP-232 [16] for additional information on No Additional Measures components.

The examination acceptance criteria and the expansion criteria for the primary/expansion links are described in Table 5-1, Table 5-2, and Table 5-3 for the B&W, CE, and Westinghouse designs, respectively. These examination acceptance criteria include visual examination relevant conditions that require disposition by additional examinations, engineering evaluation, or repair/replacement.

Section 6 briefly discusses evaluation methods for the disposition of findings from inspections completed in accordance with Section 4. Comprehensive guidance on condition evaluation is under the scope of the Pressurized Water Reactor Owners Group (PWROG) technical report WCAP-17096-NP-A [33].

Revision 2 of this report updated the aging management guidelines for relevant operating experience (OE) and to address SLR operation. Revision 2 also added two new appendices to expand the options available to implementing utilities. These appendices include guidance on the implementation of alternate aging management approaches (other than inspection and evaluation) and guidance on showing continued applicability of the I&E guidelines for plants using flexible operation for certain NSSS designs. In addition, Revision 2 of this report incorporates all Needed and Mandatory guidance from MRP 2014-006 [45], MRP 2017-009 [78] (including NSAL-16-1 [47]), MRP 2018-002 [48] (including NSAL-16-1 [47]), MRP 2018-007 [79] (including NSAL-17-1 [43]), MRP 2018-022 [84], MRP 2018-027 [54] (including NSAL-18-1 [52]), MRP 2019-002 [71], TB-07-2 [75], TB-12-5 [46], TB-14-5 [56], TB-16-4 [59], TB-19-5 [50], OG-19-101 [77] (including NSAL-18-1 [52]), and OG-20-113 [55] (including NSAL-20-1 [51]) and these guidance documents are referenced for use in these guidelines as appropriate.

EPRI notes that the figures included in this document are intended to represent the component features and relative position to other portions of the structure and system. These figures do not contain or transmit design information and are not meant to be used for performing engineering assessments, evaluations, or examinations.

Section 2: Introduction

2.1 Background

This document provides I&E guidelines for use by the industry to develop engineering programs to manage aging in PWR internals and PWR internals aging management programs that credit those engineering programs to satisfy regulatory requirements and commitments. These guidelines are an NEI 03-08 industry initiative and an element of an aging management program (AMP) for PWR internals. The guidelines apply to current operation, upratings, and license renewal NRC commitments for both first license renewal and SLR.

For the purpose of this document, the following are defined and differentiated:

- ***Engineering program***—an administratively controlled and ongoing engineering activity (controlled by an owner-specific procedure or equivalent document) that implements regulatory requirements, industry recommendations, plant efficiency and safety improvements, industry operating experience, or self-imposed utility elected requirements for the management of PWR internals continued reliability (asset management) and safety-related functionality.
- ***Aging management program***—an administratively controlled document prepared to demonstrate that the elements are in place, which satisfies the license-renewal regulatory guidance found in NUREG-1801 [5] or the SLR regulatory guidance found in NUREG-2191 [6]. It would typically credit in part the engineering program described above for satisfying this requirement.

The goal of these I&E guidelines is to ensure the long-term safety, integrity, and reliability of PWR internals using proven and familiar methods for inspection, monitoring, surveillance, and reporting. The purpose of this Revision 2 is as follows:

- Maintain guidance as a "living program" with consideration of recent operating experience and research and testing developments
- Incorporate interim guidance released since the publication of the previous revision of the I&E guidance
- Incorporate lessons learned from initial implementation of MRP-227-A (and Revision 0) and MRP-227, Revision 1-A at utilities

- Update guidance for operation into SLR according to the evaluations documented in the referenced basis documents
- Update guidance for alternate aging management approaches and flexible power operation

These guidelines are organized around a framework and strategy [7] for managing the effects of aging in PWR internals, together with a substantial database of material data and supporting results [for example, 8, 32]. The key steps in the framework and strategy process are shown in the flowchart of Figure 2-1.

Based on the framework and strategy, and on the accumulated data, the following important precursor elements to these guidelines were then developed:

- Screening criteria considering chemical composition, neutron fluence exposure, temperature history, and representative stress levels, for determining the relative susceptibility of PWR internals to the eight postulated aging mechanisms [9]—stress corrosion cracking (SCC), irradiation-assisted stress corrosion cracking (IASCC), wear, fatigue, thermal aging embrittlement (TE), irradiation embrittlement (IE), irradiation-enhanced stress relaxation and creep (ISR/IC), and void swelling (VS)
- Categorization of PWR internals, based on the screening criteria and the likelihood and severity of safety and economic consequences, into categories that range from components for which these issues are insignificant (Category A) to components that are potentially moderately significant (Category B) to components that are potentially significantly affected (Category C) [10, 11, 12]
- Engineering evaluations and safety assessments of components and assemblies of components based on representative plant designs using irradiated and aged material properties to determine the effects of the degradation mechanisms on functionality [13, 14]

These precursor elements were the basis for the I&E guidelines provided in previous revisions of this report. The screening, categorization, and engineering evaluations were updated to account for the expected effects of SLR operation as inputs for the current revision of the guidelines.

Previous revisions of the I&E guidelines focused on guidance for aging management of internals. For the current revision, the aging management recommendations have been updated. In addition, a new section providing guidance on developing a technical basis for alternate aging management approaches has been included (Appendix C). Examples of aging management approaches other than I&E include repair, replacement, plant modifications, or alternative monitoring. A new section providing guidance for flexible

power operation for Westinghouse- and CE-designed plants has been included (Appendix D). Finally, a new section describing the incorporation of SLR interim guidance from MRP 2018-022 [84] into MRP-227, Revision 2 has been included (Appendix E).

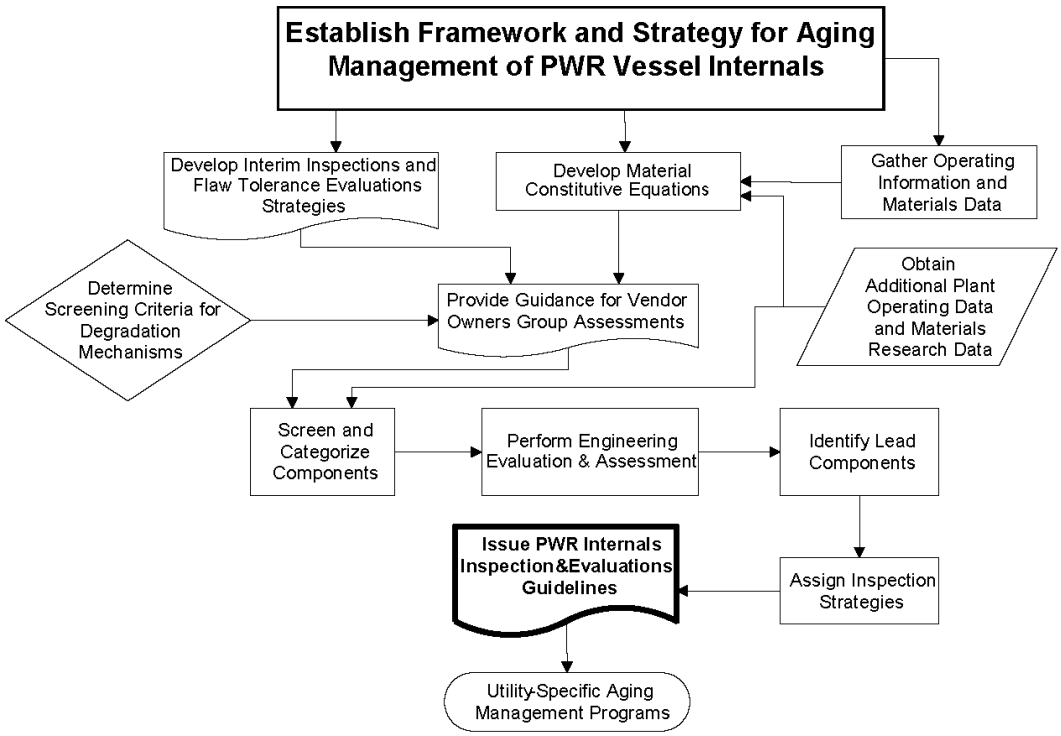

Figure 2-1
MRP framework and strategy for aging management of PWR internals

2.2 Aging Management Strategy Development

The development of this aging management strategy combined the results of engineering evaluations and assessments with component accessibility, operating experience, existing evaluations, and prior examination results. The goal of this development has been to provide reasonable assurance for safely and economically managing aging of the PWR internals [15, 16]. This process permitted further categorization of PWR internals into functional groups. Figure 2-2 shows the links between the categorization based on screening criteria, the engineering evaluations and safety assessments, the aging management strategy development, and the I&E guidelines. The ultimate result of the process was to assign the components into Primary, Expansion, Existing Programs, and No Additional Measures groups, with appropriate recommendations to support AMP development. Complete definitions of these four groups are provided in Section 3.3.1.

2.3 Scope

These guidelines are intended to prescribe programs and activities that will ensure the long-term safe and reliable operation of PWR internals as they age. As appropriately noted, the guidelines have requirements for both the original and the renewed licensing term.

These guidelines are applicable to the reactor internal structural components; they do not address fuel assemblies or reactivity control assemblies. Furthermore, these guidelines are intended for operating commercial pressurized water reactors operated as base load generation units. Guidance on showing continued applicability of these guidelines for Westinghouse- and CE-designed plants implementing flexible power operation is included in Appendix D.

These guidelines do NOT supersede or modify any plant-specific commitments without specific approval to do so by the regulatory body (such as commitments related to 10 CFR 54, ASME Section XI). These guidelines do NOT apply to new plants beginning construction after calendar year 2007.

These I&E guidelines take no position regarding Code classification of components. The expectation is that if a specified component is not included in the ASME Code 10-year ISI inspection, the plant owner is responsible for including that component as an augmentation of the ISI program.

Section 3 provides a brief overview of currently licensed PWR internals—designed and manufactured by B&W, CE, and Westinghouse—that further defines the scope of these I&E guidelines. Section 4 identifies the components and inspection requirements. The examination acceptance criteria and the expansion criteria for the primary/expansion links are described in Section 5. Section 6 is for information and identifies various options that are available for the disposition of conditions detected during examinations (Section 4) that are unable to satisfy the examination acceptance criteria (Section 5).

The implementation of these guidelines is governed by the Materials Guidelines Implementation Protocol contained in NEI 03-08, Appendix B [1]. The Mandatory and Needed requirements of these I&E guidelines are summarized in Section 7. MRP-227, Revision 2 incorporates all needed and mandatory guidance from MRP 2014-006 [45], MRP 2017-009 [78] (including NSAL-16-1 [47]), MRP 2018-002 [48] (including NSAL-16-1 [47]), MRP 2018-007 [79] (including NSAL-17-1 [43]), MRP 2018-022 [84], MRP 2018-027 [54] (including NSAL-18-1 [52]), MRP 2019-002 [71], TB-07-2 [75], TB-12-5 [46], TB-14-5 [56], TB-16-4 [59], TB-19-5 [50], OG-19-101 [77] (including NSAL-18-1 [52]), and OG-20-113 [55] (including NSAL-20-1 [51]); these guidance documents are referenced for use in these guidelines as appropriate. Individual licensees are responsible for reviewing these interim guidance documents for guidance and information not relevant to MRP-227.

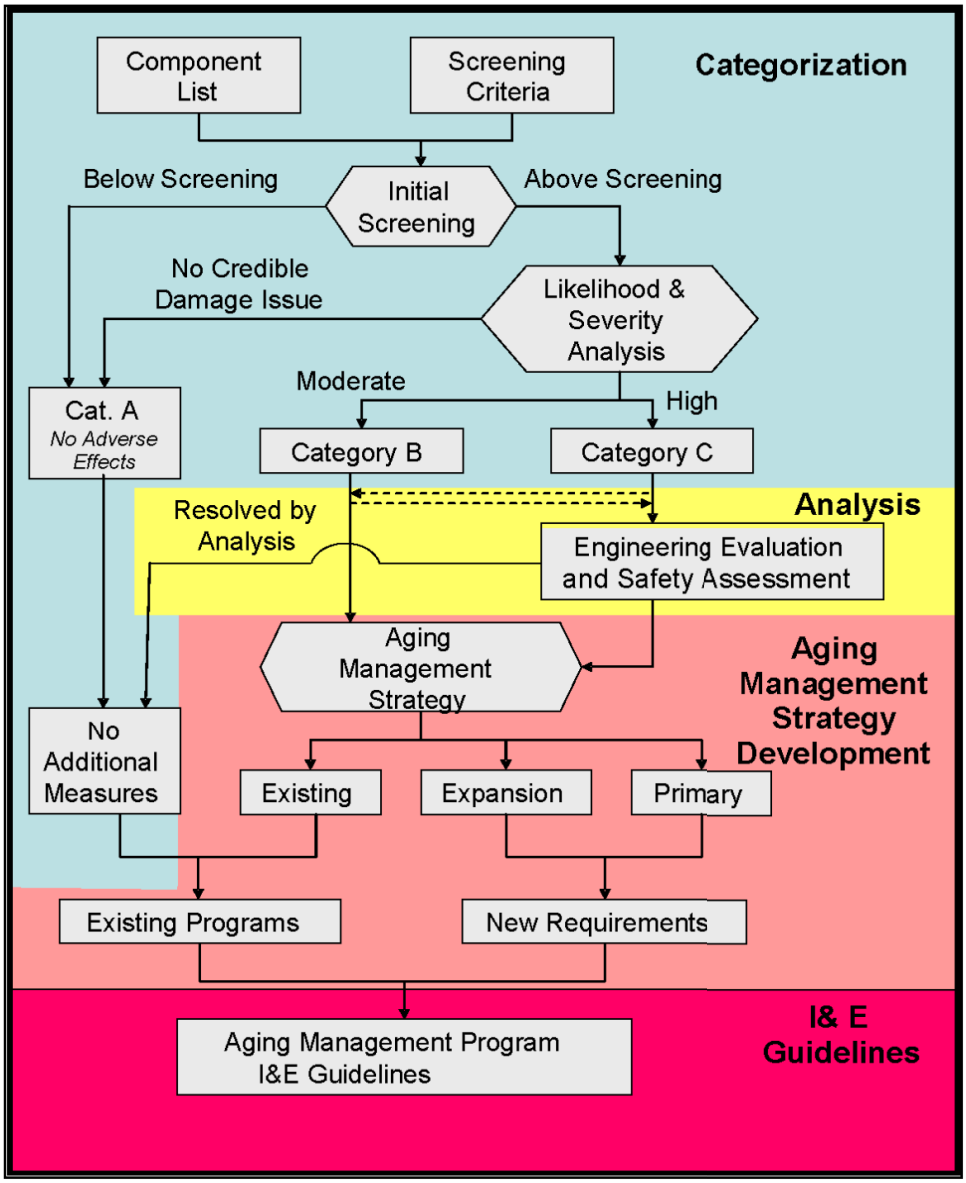

Figure 2-2
Links between categorization, analysis, aging management strategy development, and the I&E guidelines

The technical bases for implementing the recommendations in this topical report, depending on plant design and other factors, include the following EPRI Licensed reports: MRP-134, MRP-135, MRP-175, MRP-191, MRP-228, MRP-230, MRP-232, MRP-276, MRP-376, and other members-only MRP reports.

2.4 Guideline Applicability

These guidelines are intended to serve as the primary basis for owner preparation of an engineering program for managing aging in reactor internal components in accordance with the requirement cited in Section 7. The guidelines also serve as the primary basis for preparation of an AMP for reactor vessel internal components to support license renewal and SLR. It is beyond the scope of these guidelines to ensure the satisfaction of every plant-specific license renewal or power uprate commitment. Plant-specific commitments remain the responsibility of the owner.

The guidelines are based on a broad set of assumptions about plant operation, which encompass the range of current plant conditions for the domestic fleet of PWRs. The engineering evaluations and assessments and the resultant supporting aging management strategies in MRP-231 [15] and MRP-232 [16] provide the basis for these guidelines. These evaluations were based on representative configurations and operational histories, which were generally conservative, but not necessarily bounding in every parameter.

Users of these guidelines are expected to confirm with reasonable assurance that each reactor managed with the guidelines satisfies the following general assumptions used in the analysis:

- Thirty years of operation with high-leakage core loading patterns (fresh fuel assemblies loaded in peripheral locations) followed by implementation of a low-leakage fuel management strategy for the remaining years of operation, as well as the average core power levels and proximity of active fuel to the upper core support plate satisfies limits as described in Appendix B for Westinghouse and CE plants.
- The power plant has operated for the majority of its lifetime as a base-loaded unit and is currently operating as a base-loaded power plant, in that the unit operates at fixed thermal power levels and does not usually vary power on a calendar or load demand schedule, or the power plant has implemented flexible power operation within the screening limits on power change range and number of flexible power operations provided in Appendix D for Westinghouse- and CE-designed plants.
- No design changes beyond those identified in general industry guidance or recommended by the original vendors.
- Components and material class of each functional component are as listed in MRP-189, Revision 3 [10] or MRP-191, Revision 2 [12], as applicable to the individual plant design.

These assumptions are a conservative representation of U.S. PWR operating plants, all of which implemented low leakage core loading patterns early in their operating life. The recommendations are thus applicable to all U.S. PWR operating plants as of November 2017 for the three designs identified. These guidelines are also considered applicable to plants that have replaced components or component assemblies; however, alternatives can be technically justified.

If major plant-specific differences from the inputs to the failure modes, effects, and criticality analysis (FMECA) process described in MRP-189 and MRP-191 are identified, then plant owners must determine and document the impact, if any, on the aging management strategy described here.

Plant modifications to PWR internals (such as physical changes) made after calendar year 2017 should be reviewed to assess impacts on strategies contained in these guidelines. Plant modifications made or considered after this date should be reviewed to assess impacts on strategies contained in these guidelines. Some plant-specific reviews of modifications have been completed since the issuance of MRP-227-A [17]; the results of these reviews have been considered in Revision 2 of these I&E guidelines.

MRP-227 identifies that certain CE and Westinghouse PWR internals components that are subject to inspection under existing programs require further plant-specific evaluation to verify the acceptability of the existing programs, or to identify changes to the existing programs that should be implemented to manage the aging of these components for the period of extended operation. If the existing programs are not acceptable, it is necessary to identify and implement changes to the programs to manage aging of applicable components over the period of extended operation. Generically, these are components outside of Table 4-8 and Table 4-9 for which existing plant-specific programs other than general guidance (for instance, a plant's ASME Code, Section XI program) are being credited for managing aging. These components are left for plant-specific evaluation because, although the industry is able to identify that plant-specific programs already exist for the management of these components, the industry is unable to evaluate in detail the content of each facility's plant-specific program. Therefore, it is the owner's responsibility to perform a plant-specific evaluation to verify the acceptability of the existing programs, or to identify changes to the program or component replacement strategies and initiatives that should be implemented to manage the aging of these components for the period of extended operation.

In addition, users of these guidelines with CE and Westinghouse plants are encouraged to use the supplemental information provided in letters MRP-2014-017 and MRP-2014-019, which were developed to assist those plant owners in performing FMECA evaluations. Plant-specific assessments of cast austenitic stainless steel (CASS) materials are no longer required according to the conclusion of the safety evaluation on applicant/licensee action items 1 and 7 [19] unless a CASS component not previously addressed is assigned to a category other than "no additional measures." These letters providing assistance with performing FMECA evaluations combined with PWROG-15032 [40], which addresses plant-specific assessments of CASS PWR internals components, are available for plants needing to develop aging management strategies for CASS components. These documents were previously provided to utility owners as potentially useful tools when preparing an AMP per NUREG-1801 [5].

Section 3: Component Categorization and Aging Management Strategy Development

This section of the I&E guidelines provides a summary of the design characteristics for B&W, CE, and Westinghouse PWR internals; a summary of the screening process used for the preliminary categorization of PWR internals; and a summary of the categorization and aging management strategy development results.

3.1 Design Characteristics Summary

The following are the functions of PWR internals:

- Provide support, guidance, and protection for the reactor core.
- Provide a passageway for the distribution of reactor coolant flow to the reactor core.
- Provide a passageway for support, guidance, and protection for control elements and in-vessel/core instrumentation.
- Provide gamma and neutron shielding for the reactor vessel.

3.1.1 B&W Internals Design Characteristics

The five B&W-designed operating units share common design characteristics, with minor variations. The B&W-designed PWR internals consist of two major structural assemblies that are located within, but not welded to, the reactor vessel. These two major assemblies are called the plenum assembly and the core support assembly (CSA). The latter includes three principal subassemblies: the core support shield (CSS) assembly, the core barrel assembly, and the lower internals assembly. The general arrangement of the B&W-designed PWR internals is shown in Figure 3-1. A brief summary of the design characteristics for these internals is provided in the following subsection. For a more complete discussion, see MRP-189, Revision 3 [10].

Plenum Assembly

The plenum assembly is a cylindrical structure with perforated grid plates on top and bottom, and consists of the plenum cover assembly, the plenum cylinder assembly, the upper grid assembly, and the control rod guide tube assemblies. The plenum assembly fits inside the core support shield, positions the top of the fuel assemblies, supports the control rod guide tube assemblies, and provides the core hold-down required for hydraulic lift forces. The plenum assembly also provides continuous guidance and protection for the control rods and directs flow out of the core to reactor vessel outlet nozzles. The plenum assembly is removed at the beginning of every refueling outage to permit access to the fuel assemblies (Figure 3-1).

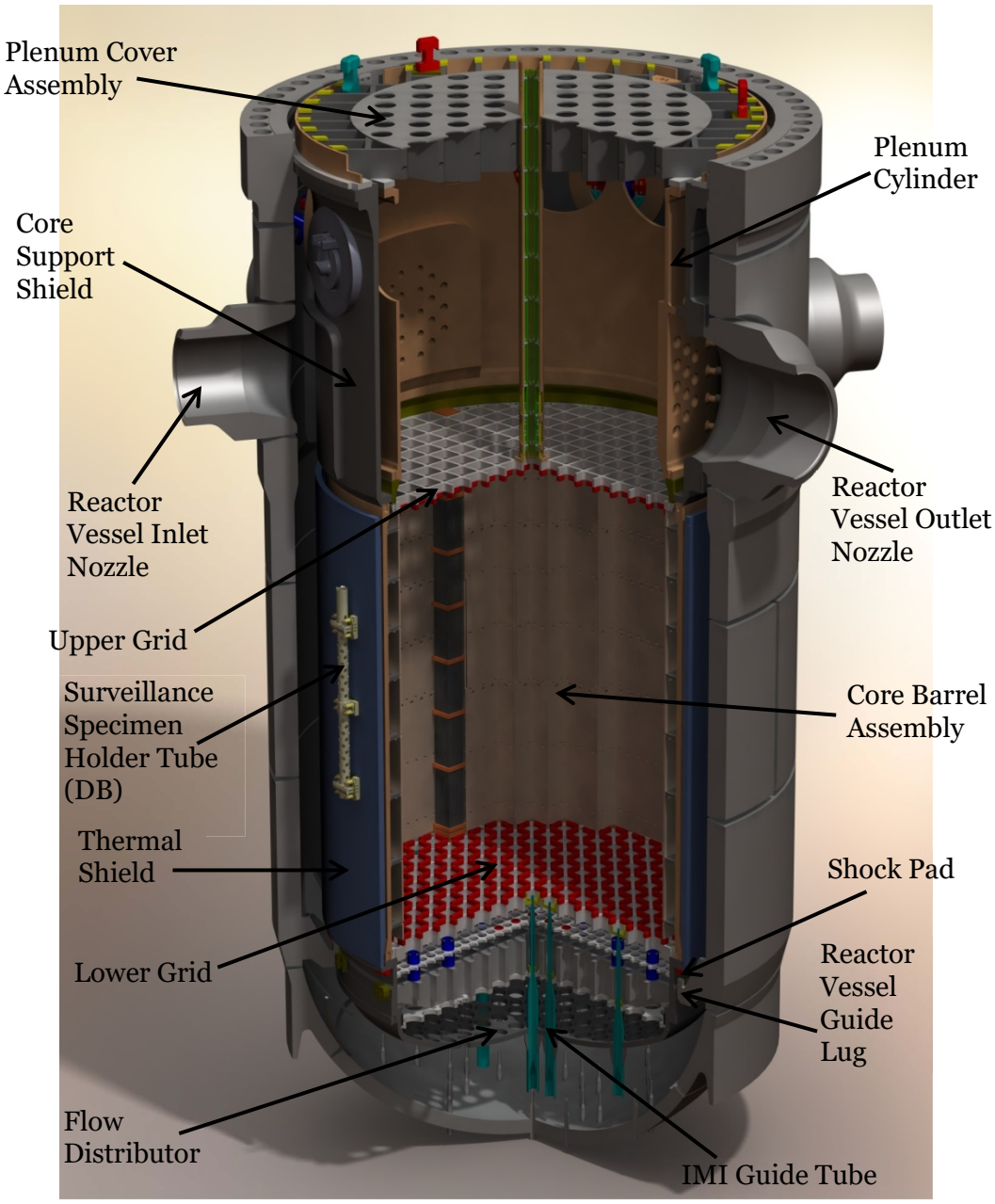

Figure 3-1
Overview of typical B&W internals

The plenum cover assembly is bolted to the top of the plenum cylinder and consists of a weldment, a bottom flange, a support ring and flange, a cover plate, and lifting lugs. The plenum cover assembly provides support for the top of the control rod guide tube assemblies. The lifting lugs are used to lift the plenum assembly out of the reactor vessel.

The plenum cylinder assembly is bolted to the bottom of the plenum cover assembly and consists of a cylinder, top and bottom flanges, reinforcing plates, and round bars. Its function is to direct the flow of reactor coolant from the core region to the reactor vessel outlet nozzles.

The upper grid assembly sits inside the lower flange of the core support shield and is bolted to the plenum cylinder bottom flange. It consists of an upper grid ring forging, an upper grid rib section, and fuel assembly support pads. Its function is to support and provide a seating surface for the tops of the fuel assemblies located within the core barrel below, and to restrain and align the bottoms of the control rod guide tubes.

The control rod guide tube assemblies each consist of a pipe (the guide housing), a flange, spacer castings, guide tubes, and rod guide sectors. The assemblies are welded to the plenum cover plate and bolted to the upper grid assembly. Their function is to provide control rod assembly guidance, protect the control rod assembly from the effects of potential coolant cross-flow, and structurally connect the upper grid assembly to the plenum cover.

Core Support Assembly

The core support assembly is fabricated by bolting together the core support shield assembly, the core barrel assembly, and the lower internals assembly to form a tall cylinder. The core support assembly remains in place in the reactor vessel during refueling and is removed only to perform scheduled inspections of the reactor vessel interior surfaces or of the core support assembly itself.

The top portion of the core support assembly is the core support shield assembly, a cylinder with an upper flange that rests on a circumferential support ledge in the reactor vessel closure flange, thereby supporting the entire core support assembly. It sits directly on top of the core barrel and consists of a cylinder, top and bottom flanges, outlet nozzles, vent valve nozzles, vent valves, round bars, flow deflectors, and lifting lugs. Its function is to provide a boundary between the incoming cold reactor coolant on the outside of the cylinder and the heated reactor coolant flowing on the inside of the cylinder.

The core barrel assembly is a second flanged cylinder, with its top flange bolted to the bottom flange of the core support shield assembly and its bottom flange bolted to the top flange of the lower internals assembly. The core barrel assembly consists of a cylinder, top and bottom flanges, baffle and former plates, and a thermal shield cylinder. Its functions are to direct the flow of coolant and to support the lower internals assembly. In addition, the thermal shield reduces the amount of radiation that reaches the reactor vessel. The incoming reactor coolant is directed downward along the outside of the core barrel cylinder and upward through the fuel assemblies contained inside the core barrel. A small amount of coolant flows upward through the space between the core

barrel cylinder and the baffle plates. A small portion of the coolant also runs down the annulus between the thermal shield and the core barrel cylinder, through holes drilled in the core barrel cylinder bottom flange, and then upward through the core.

The lower internals assembly consists of a lower grid assembly, a flow distributor assembly, and in-core monitoring instrumentation guide tube assemblies. The lower internals assembly is bolted to the bottom flange of the core barrel cylinder; its function is to direct coolant flow upward through the fuel assemblies. The lower grid assembly consists of three grid structures or flow plates: the lower grid rib section, the flow distributor plate, and the lower grid forging. Each of these flow plates has holes or flow ports to direct coolant flow upward toward the fuel assemblies.

3.1.2 Internals Design Characteristics

In general, the 11 operating CE-designed PWRs in the United States are divided into three groups: those with a bolted core shroud and top-mounted in-core instrumentation (ICI), those with a welded core shroud and top-mounted ICI, and those with a welded core shroud and bottom-mounted ICI. There is only one bolted core shroud plant still in operation, and that plant is expected to shut down in the near future; therefore, only the two welded core shroud plant categories have been updated in the current revision of the I&E guidelines and the CE bolted core shroud design has been removed from the current revision.

The CE-designed PWR internals consist of three major structural assemblies, plus three other sets of major components. The three major assemblies are the upper internals assembly, core support barrel assembly, and lower internals assembly. In addition, the three other sets of major components are the control element assembly shroud assemblies, core shroud assembly, and in-core instrumentation support system. The general arrangement of the CE-designed PWR internals is shown in Figure 3-2. A brief summary of the design characteristics for these internals is provided in the following subsection. For a more complete discussion, see MRP-191, Revision 2 [12].

Upper Internals Assembly

The upper internals assembly is located above the reactor core, within the core support barrel assembly, and is removed during refueling as a single component to provide access to the fuel assemblies. The upper internals assembly consists of the upper guide structure support plate, the fuel assembly alignment plate, the control element assembly shroud assemblies, the upper guide structure grid assembly, the upper guide structure cylinder, the ICI support system, and the hold-down ring (or expansion compensating ring). The functions of the upper internals assembly are to provide alignment and support to the fuel assemblies, to maintain control element assembly shroud spacing, to prevent movement

of the fuel assemblies in the case of a severe accident condition, and to protect the control rods from cross-flow effects in the upper plenum. The flange on the upper end of the upper internals assembly rests on the core support barrel.

Core Support Barrel

The core support barrel assembly consists of the core support barrel, the core support barrel upper flange, core support barrel alignment keys, and the core support barrel snubbers.

The core support barrel is a cylinder that contains the core and other internals. Its function is to resist static loads from the fuel assemblies and other internals and dynamic loads from normal operating hydraulic flow, seismic events, and loss-of-coolant accident (LOCA) events. The core support barrel also supports the lower internals assembly and its core support plate, on which the fuel assemblies rest.

The core support barrel upper flange is a thick ring that supports and suspends the core support barrel from a ledge on the reactor vessel. The core support barrel of the predominant CE design also has an inward-facing lower flange for support of the lower support structure. This flange has an integral flexure ring that is welded to and provides lateral support for the lower support structure. The core support barrel is a welded construction and the susceptibility of these full-thickness welds to IASCC was researched in MRP-376 [35].

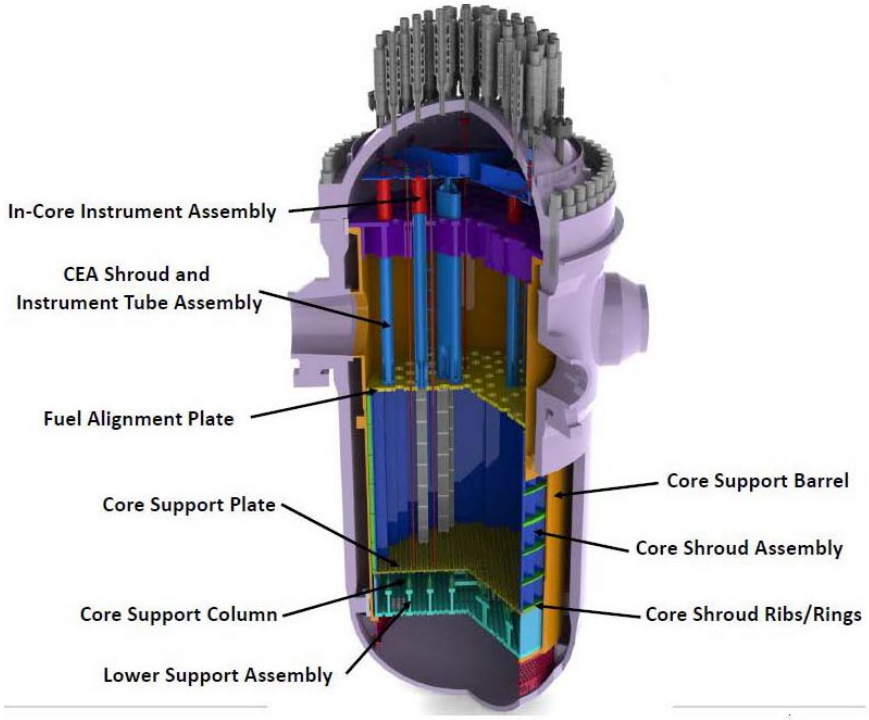

Figure 3-2
Overview of typical CE internals

Lower Internals Assembly

The lower internals assembly consists of the core support plate, the fuel alignment pins, the core support columns, the ICI support system (in some plants), and the lower support structure beam assemblies. The core support plate functions are to position and support the reactor core, and to distribute reactor coolant flow into each fuel assembly. The core support plate transmits the weight of the core to the core support barrel by means of the vertical core support columns, an annular skirt, and the lower support structure beams. The fuel alignment pins protrude from the core support plate and provide guidance and limit lateral movement of the individual fuel assemblies. CE plants with a welded core shroud and bottom-mounted ICI have no core support plate, in which case the fuel alignment pins are attached directly to the core support deep beams.

Core Shroud Assembly

The core shroud assembly is located within the core support barrel and directly below the upper internals assembly. The core shroud assembly is attached to the core support plate—an element of the lower internals assembly—by tie rods or welds for the internals with a welded core shroud and top-mounted ICI (Figure 3-3). The core shroud assembly is attached to the lower internals assembly cylinder by welding for internals with a welded core shroud and bottom-mounted ICI (Figure 3-4). The core shroud assembly functions are to provide a boundary between reactor coolant flow on the outside of the core support barrel and the reactor coolant flow through the fuel assemblies, to limit the amount of coolant bypass flow, and to reduce the lateral motion of the fuel assemblies.

Control Element Assembly Shroud Assemblies

The control element assembly shroud assemblies consist of control element assembly shrouds, the control element assembly shroud bolts, and the control element assembly shroud extension shaft guides. The shroud tubes protect the control rods from cross-flow effects in the upper plenum. The bottom part of the shrouds is bolted at their lower end to the fuel assembly alignment plate. The extension shaft guides also protect the control rods from cross-flow effects in the upper plenum, and provide lateral support and alignment of the control element assembly extension shafts during refueling operations. The control element drive mechanisms are positioned on the reactor vessel closure head and are coupled to the control element assemblies by the control element assembly extension shafts. Control element assembly shroud assemblies are attached to the upper guide structure support plate by tie rods.

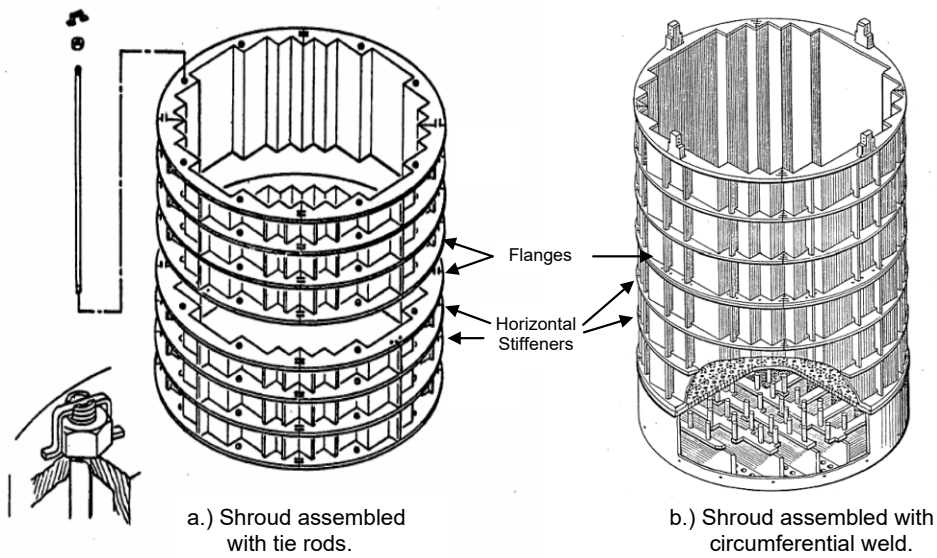

Figure 3-3
Typical CE welded core shroud designs assembled in two vertical sections (with top-mounted ICI)

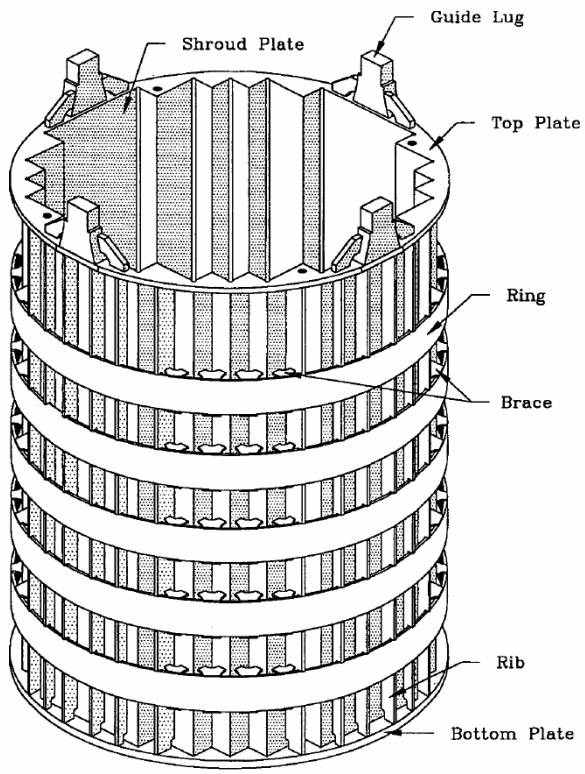

Figure 3-4
Typical CE welded core shroud with full height panels (with bottom-mounted ICI)

In-Core Instrumentation Support System

The ICI support system consists of ICI guide tubes and components that provide support to the ICI.

For plants with top-entry ICI assemblies, the ICI is inserted through the reactor vessel head through a nozzle into a guide tube. The guide tubes interface with the thimble support plate, which is perforated to fit over the control element assembly extension shaft guides, with a connection to the upper guide structure support plate. ICI thimble tube assemblies extend downward from a flanged connection at the thimble support plate (in the original design) through the fuel alignment plate and into the reactor core. The upper portion of the ICI thimble tube exists between the thimble support plate and fuel alignment plate; the lower ICI thimble tube is the zirconium alloy portion that extends into the fuel assemblies.

For plants with bottom-entry ICI, the guide tubes are connected to and supported by the lower internals assembly, from which the ICI enters the core.

3.1.3 Westinghouse Internals Design Characteristics

A schematic view of a typical set of Westinghouse-designed PWR internals is shown in Figure 3-5. However, because of the significant variation in design characteristics, the operating Westinghouse PWRs in the United States are subdivided into various groups, starting with the number of reactor coolant system (RCS) loops: 2-loop, 3-loop, and 4-loop configurations. Other significant variations include the original thermal output, the baffle-barrel region flow design (downflow, upflow, and converted upflow), and the upper support plate configuration. A complete set of these groups is provided in Section 4 of MRP-191, Revision 2 [12].

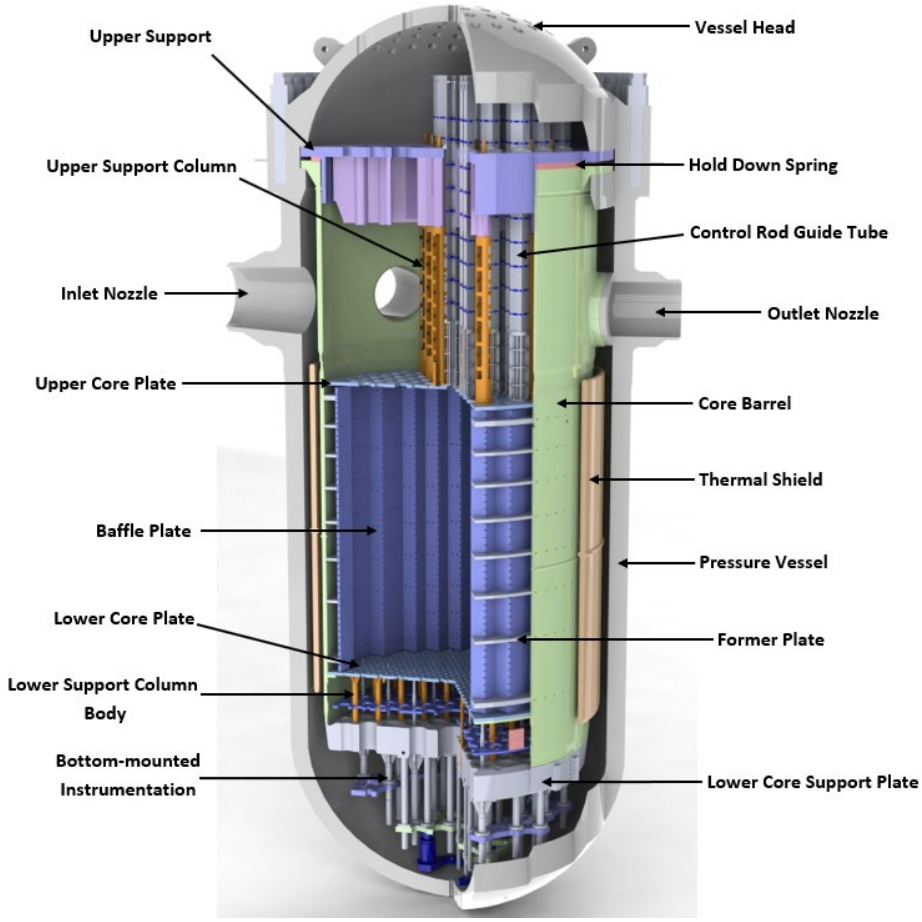

Figure 3-5
Overview of typical Westinghouse internals

All Westinghouse internals consist of two basic assemblies: an upper internals assembly that is removed during each refueling operation to obtain access to the reactor core and a lower internals assembly that can be removed following a complete core off-load.

Upper Internals Assembly

The major subassemblies that compose the upper internals assembly are the upper core plate (UCP) and fuel alignment pins, upper support column assemblies, control rod guide tube assemblies and flow downcomers, upper plenum, and upper support plate assembly.

During reactor operation, the upper internals assembly is preloaded against the fuel assembly springs and the internals hold-down spring by the reactor vessel head pressing down on the outside edge of the upper support plate (USP). The USP acts as the divider between the upper plenum and the reactor vessel head and as a relatively stiff base for the rest of the upper internals. The upper support columns and the guide

tubes are attached to the USP. The UCP, in turn, is attached to the upper support columns. The USP assemblies are designated as one of three different designs: a deep beam design, a top hat design, or an inverted top hat design.

The UCP is perforated to permit coolant to pass from the core below into the upper plenum defined by the USP and the UCP. The coolant then exits through the outlet nozzles in the core barrel. The UCP positions and laterally supports the core by fuel alignment pins extending below the plate. The UCP contacts and preloads the fuel assembly springs and thus maintains contact of the fuel assemblies with the lower core plate (LCP) during reactor operation.

The upper support columns vertically position the UCP and are designed to take the uplifting hydraulic flow loads and fuel spring loads on the UCP. The guide tubes are bolted to the USP and pinned at the UCP so they can be easily removed if replacement is desired. The guide tubes are designed to guide the control rods in and out of the fuel assemblies to control power generation. The guide tubes are also slotted in their lower sections to allow coolant exiting from the core to flow into the upper plenum.

The upper instrumentation columns are bolted to the USP. These columns support the thermocouple guide tubes that lead the thermocouples from the reactor head into the upper plenum to just above the UCP.

The UCP alignment pins locate the UCP laterally with respect to the lower internals assembly. The pins must laterally support the UCP so that the plate is free to expand radially and move axially during differential thermal expansions between the upper internals and the core barrel. The UCP alignment pins are the interfacing components between the UCP and the core barrel. The UCP alignment pins are shrunk-fit and welded into the core barrel and the core barrel bearing pad. The gap sizes between the alignment pins and the matching inserts are customized.

The USP, the upper support columns, and the UCP are typically considered core support structures.

Lower Internals Assembly

The reactor core is positioned and supported by the lower internals and upper internals assemblies. The individual fuel assemblies are positioned by fuel alignment pins in the LCP and in the UCP. These pins control the orientation of the core with respect to the lower internals and upper internals assemblies. The lower internals are aligned with the upper internals by the UCP alignment pins and secondarily by the head/vessel alignment pins. The lower internals are orientated to the vessel by the lower radial keys and by the head/vessel alignment pins. Thus, the core is aligned with the vessel by a number of interfacing components.

The lower internals assembly is supported in the vessel by clamping to a ledge below the vessel-head mating surface and closely guided at the bottom by radial support/clevis assemblies. The upper internals assembly is clamped at this same ledge by the reactor vessel head. The bottom of the upper internals assembly is closely guided by the core barrel alignment pins of the lower internals assembly.

The fuel assemblies are supported inside the lower internals assembly on top of the LCP. The LCP is elevated above the lower support forging by support columns and bolted to a ring support attached to the inside diameter of the core barrel. The support columns transmit vertical fuel assembly loads from the LCP to the much thicker lower support forging. The lower support forging is welded to and supported by the core barrel, which transmits vertical loads to the vessel through the core barrel flange.

The functions of the LCP are to position and support the core and provide a metered control of reactor coolant flow into each fuel assembly. The LCP is located near the bottom of the lower support assembly, inside the core barrel, and above the lower support forging.

The function of the lower support forging or casting is to provide support for the core. The lower support forging is attached with a full-penetration weld to the lower end of the core barrel. In this position it can provide uninterrupted support to the core. The core sits directly on the LCP, which is supported by the lower support columns that are attached to and extend above the lower support forging. Some 4-loop plants employ a cast lower support instead of a forging [34]. The functions, loads, and supporting hardware are the same except for dimensions.

The primary function of the core barrel is to support the core. A large number of components are attached to either the core barrel or the core barrel flange, including the baffle–former assembly, the outlet nozzles, the neutron panel assemblies or thermal shield, the alignment pins that engage the UCP and the LCP, the lower support forging, and the LCP. The radial keys restrain large transverse motions of the core barrel but at the same time allow unrestricted radial and axial thermal expansions.

The baffle–former assembly is made up of vertical plates called *baffles* and horizontal support plates called *formers*. The baffle plates are bolted to the formers by the baffle-former bolts, and the formers are attached to the core barrel inside diameter by the barrel-former bolts. The baffle-former assembly forms the interface between the core and the core barrel. The baffles provide a barrier between the core and the former region so that a high concentration of flow in the core region can be maintained. A secondary benefit, although not a requirement of the baffles, is to reduce the neutron flux on the vessel.

Baffle plates are secured to each other at selected corners by edge bolts. In addition, in some installations, corner brackets are installed behind and bolted to the baffle plates.

The function of the core barrel outlet nozzles is to direct the reactor coolant, after it leaves the core, radially outward through the reactor vessel outlet nozzles. The core barrel outlet nozzles are located in the upper portion of the core barrel directly below the flange and are attached to the core barrel, each in line with a vessel outlet nozzle.

Additional neutron shielding of the reactor vessel is provided in the active core region by neutron panels or thermal shields that are attached to the outside of the core barrel. Specimen guides that contain specimens for determining the irradiation effects of the vessel during the life of the plant are attached to the neutron panels/thermal shields.

The flux thimble is a long, slender stainless steel tube that passes from an external seal table, through the bottom mounted nozzle penetration, through the lower internals assembly, and finally extends to the top of the fuel assembly. The flux thimble provides a path for the neutron flux detector into the core and is subjected to reactor coolant pressure and temperature on the outside surface and to atmospheric conditions on the inside. The flux thimble path from the seal table to the bottom-mounted nozzles is defined by flux thimble guide tubes, which are part of the primary pressure boundary and not considered to be part of the internals. The bottom-mounted instrumentation (BMI) columns provide a path for the flux thimbles from the bottom of the vessel into the core. The BMI columns align the flux thimble path with instrumentation thimbles in the fuel assembly.

The LCP and the fuel alignment pins, the lower support forging or casting, the lower support columns, the core barrel, the core barrel flange, the radial support keys, the baffle plates, and the former plates are typically classified as core support structures.

3.2 Initial Screening Summary

This subsection contains a summary of the initial screening of PWR internals—screening these internals on the basis of susceptibility to eight different age-related degradation mechanisms: SCC, IASCC, wear, fatigue, TE, IE, VS, and the combination of thermal and irradiation-enhanced stress relaxation or irradiation-enhanced creep. Development and justification of the screening criteria required knowledge of the specific aging mechanisms and their effects, some engineering judgment, and the use of empirical relations when data were lacking. The full explanation of the screening criteria for the eight age-related degradation mechanisms identified for PWR internals is provided in MRP-175, Revision 1 [9].

For this initial screening, the group of PWR internals that were deemed not to be susceptible to any of the eight age-related degradation mechanisms (that is, below the screening criteria) were placed into Category A. These components are listed in previous reports for the B&W PWR designs [10] and the CE and Westinghouse PWR designs [12]. The further categorization of the components is discussed in Section 3.3.

The age-related degradation mechanisms used for the initial screening are defined in the following subsections. More detailed discussions of these aging mechanisms are provided in MRP-175, Revision 1 [9].

3.2.1 Stress Corrosion Cracking

SCC refers to local, nonductile cracking of a material resulting from a combination of tensile stress, environment, and metallurgical properties. The actual mechanism that causes SCC involves a complex interaction of environmental and metallurgical factors. The aging effect is cracking.

3.2.2 Irradiation-Assisted Stress Corrosion Cracking

IASCC is a unique form of SCC that occurs only in highly irradiated components. The aging effect is cracking.

3.2.3 Wear

Wear is caused by the relative motion between adjacent surfaces, with the extent determined by the relative properties of the adjacent materials and their surface condition. The aging effect is loss of material.

3.2.4 Fatigue

Fatigue is defined as the structural deterioration that can occur as the result of repeated stress/strain cycles caused by fluctuating loads and temperatures. After repeated cyclic loading of sufficient magnitude, microstructural damage can accumulate, leading to macroscopic crack initiation at the most highly affected locations. Subsequent mechanical or thermal cyclic loading can lead to growth of the initiated crack. Corrosion fatigue is included in the degradation description.

Low-cycle fatigue is defined as cyclic loads that cause significant plastic strain in the highly stressed regions, where the number of applied cycles is increased to the point at which a crack eventually initiates. When the cyclic loads are such that significant plastic deformation does not occur in the highly stressed regions but the loads are of such increased frequency that a fatigue crack eventually initiates, the damage accumulated is said to have been caused by high-cycle fatigue. The aging effects of low-cycle fatigue and high-cycle fatigue are additive.

Fatigue crack initiation and growth resistance is governed by a number of material, structural, and environmental factors, such as stress range, loading frequency, surface condition, and presence of deleterious chemical species. Cracks typically initiate at local geometric stress concentrations, such as notches, surface defects, and structural discontinuities. The aging effect is cracking.

3.2.5 Thermal Aging Embrittlement

TE is material embrittlement resulting from the exposure of delta ferrite within CASS and martensitic precipitation-hardenable (PH) stainless steel to high in-service temperatures. This can result in an increase in tensile strength, a decrease in ductility, and a loss of fracture toughness. Some degree of thermal aging embrittlement can also occur at normal operating temperatures for CASS and martensitic PH stainless steel internals. CASS components have a duplex microstructure and are particularly susceptible to this mechanism [40]. The mechanism's aging effects are loss of ductility and toughness; the eventual aging effect of concern is unstable crack extension when the local applied stress intensity in an existing crack exceeds the reduced fracture toughness.

3.2.6 Irradiation Embrittlement

IE is also referred to as *neutron embrittlement*. The mechanical properties of stainless steel and nickel-base alloys can be changed when exposed to high-energy neutrons. Such changes in mechanical properties include increasing yield strength, increasing ultimate strength, decreasing ductility, and a loss of fracture toughness [33, 40]. The irradiation embrittlement aging mechanism is a function of both temperature and neutron fluence. The mechanism's aging effects are loss of ductility and toughness; the eventual aging effect of concern is unstable crack extension when the local applied stress intensity in an existing crack exceeds the reduced fracture toughness.

3.2.7 Void Swelling and Irradiation Growth

VS is defined as a gradual increase in the volume of a component caused by formation of microscopic cavities in the material. These cavities result from the nucleation and growth of clusters of irradiation-produced vacancies. Helium produced by nuclear transmutations can have a significant impact on the nucleation and growth of cavities in the material. VS may produce dimensional changes that exceed the dimensional tolerances of a component. Strain gradients produced by differential swelling in the system may produce significant stresses. Severe swelling (>5% by volume) has been correlated with extremely low fracture toughness values. Also included in this description is irradiation growth of anisotropic materials, which is known to cause significant dimensional changes in ICI tubes fabricated from zirconium alloys. Whereas the initial aging effect is dimensional change and distortion, severe VS may result in cracking under stress.

3.2.8 Thermal and Irradiation-Enhanced Stress Relaxation or Irradiation-Enhanced Creep

The loss of preload aging effect can be caused by the aging mechanisms of stress relaxation or creep. Thermal stress relaxation (or primary creep) is defined as the unloading of preloaded components resulting from long-term exposure to elevated temperatures, as seen in PWR internals. Stress relaxation occurs under conditions of constant strain where part of the elastic strain is replaced with plastic strain. Available data show that thermal stress relaxation appears to reach saturation in a short time (<1000 hours) at PWR internals temperatures.

Creep (or, more precisely, secondary creep) is a slow, time and temperature dependent plastic deformation of materials that can occur when they are subjected to stress levels below the yield strength (elastic limit). Creep occurs at elevated temperatures where continuous deformation takes place under constant strain. Secondary creep in austenitic stainless steels is associated with temperatures higher than those relevant to PWR internals even after taking gamma heating into account. However, irradiation-enhanced creep (or more simply, irradiation creep) or ISR is an athermal process that depends on the neutron fluence and stress; it can also be affected by VS should it occur. The aging effect is a loss of mechanical closure integrity (or preload) that can lead to unanticipated loading, which, in turn, may eventually cause subsequent degradation by fatigue or wear and result in cracking.

3.3 Component Categorization and Aging Management Strategy Development Results Summary

3.3.1 Method and Definitions

This subsection provides a summary of the results of the categorization of PWR internals after the initial screening. In this exercise, FMECA was applied to the PWR internals (documented in MRP-189 [10] and MRP-190 [11] for B&W internals and MRP-191 [12] for CE and Westinghouse internals). Based on the FMECA results, the most affected PWR internals were placed into Category C (highest priority for assessments), whereas the components that are only moderately affected were placed into Category B (next highest priority for assessment). In addition, the FMECA process determined that some components not initially Category A (lowest priority for assessment) were sufficiently unaffected by consequences and placed into Category A. These priorities helped to define the range of the assessment sampling process.

In addition to this categorization using FMECA, a more refined assessment involving engineering evaluations and safety assessments of the Category B and C components was performed with the intent to determine the tolerance of components and systems of components to aging degradation effects. These assessments are documented in

MRP-231 [15] for B&W internals and in MRP-232 [16] for CE and Westinghouse internals. When these evaluations and assessments were completed, all PWR internals were placed into four functional groups that further defined the assessment sampling process, as follows:

- Primary: PWR internals components that are highly susceptible to the effects of at least one of the eight aging mechanisms were placed in the Primary group. The aging management requirements are intended to provide reasonable assurance of the continued functionality of Primary components and to predict future behavior of Expansion components as described in these I&E guidelines. Where little to no service degradation has been experienced to date and/or service degradation is not expected solely based on the aging mechanism, a sampling strategy for primary components is specified. The Primary group also includes components that have shown a degree of tolerance to a specific aging degradation effect, but for which no highly susceptible component exists or for which no highly susceptible component is accessible.
- Expansion: PWR internals components that are highly or moderately susceptible to the effects of at least one of the eight aging mechanisms, but for which engineering evaluations and safety assessments have shown a degree of tolerance to those effects, were placed in the Expansion group. The schedule for implementation of aging management requirements for Expansion components will depend on the findings from the examinations of the Primary components at individual plants. In this regard, the Expansion group also consists of components for which an increased scope of the Primary component sample is specified based on degradation detected in the Primary sample (that is, increased sampling of a Primary component).
- Existing Programs: PWR internals components that are susceptible to the effects of at least one of the eight aging mechanisms and for which generic and plant-specific existing AMP elements (for instance, ASME B&PV Code Section XI [2]) are capable of managing those effects, were placed in the Existing Programs group.
- No Additional Measures: PWR internals components for which the effects of all eight aging mechanisms are below the screening criteria were placed in the No Additional Measures group. Additional components were placed in the No Additional Measures group as a result of the FMECA and the engineering evaluations and safety assessments. No further action is required by these guidelines for managing the aging of the No Additional Measures components.

These four categories define a sampling-based condition monitoring program, starting with periodic examinations and other inspections of highly affected internals locations, with expanding periodic examinations and other inspections if the extent of detected degradation effects exceeds expected levels (that is, consistent with NRC Branch Technical Position RSLB-1 in NUREG-1800 [64] for first license renewal or with NRC

Branch Technical Position RSLB-1 in NUREG-2192 [65] for SLR). Such a sampling program provides reasonable assurance that the effects of age-related degradation mechanisms will be managed during the period of extended operation. Disassembly of the internals components from their respective major internals assembly is not required for this sampling and lead component approach in order to minimize the risk of damage to the internals and of personnel radiation exposure.

The categorization and analysis processes described here are not intended to supersede any ASME B&PV Code Section XI [2] requirements. Any components that are classified as core support structures as defined in ASME B&PV Code Section XI IWA-9000, and covered by Table IWB-2500-1 Category B-N-3 [2], have requirements that remain in effect and may be altered only as allowed by 10 CFR 50.55a [4] or plant-specific licensing documentation.

3.3.2 Results of Categorization and Aging Management Strategy Development

The results of this categorization and sampling process are shown in Table 3-1 through Table 3-3, which have been updated for the current revision considering both the latest operating experience and SLR operation [15, 16]. In these tables, the right-hand column characterizes the final group: P corresponds to Primary components, E corresponds to Expansion components, X to Existing Programs components, and N refers to No Additional Measures components. A, B, and C (defined in Section 2.1 and Figure 2-2) refers to the categories after the initial screening and FMECA [10, 11, 12].

The component nomenclature used in these tables is consistent with the bases documents and may not be the same as that used in the tables of Sections 4 and 5.

Table 3-1
Final disposition of non-Category A component items and welds in B&W PWR internals (SLR, note 1)

(P [Primary], E [Expansion], and N [No Additional Measures]; "A" stands for Category "A" prior to the engineering evaluation.)

Component Item or Weld	Material	Initial Category	SCC	IASCC	Wear	Fatigue	TE	IE	VS	ISR/IC	Final Group
Plenum Cover Assembly											
Plenum cover weldment rib pads	304 SS	C	A	A	P	A	A	A	A	A	P
Plenum cover support flange	304 SS	C	A	A	P	A	A	A	A	A	P
Plenum cover support ring	304 SS	C	A	A	P	A	A	A	A	A	P
Plenum cover weldment ribs to each other welds	308L SS	B	A	A	A	E (Note 2)	A	A	A	A	E
Alloy X-750 dowels-to-plenum cover bottom flange welds	Alloy 82	B	N	A	A	A	A	A	A	A	N
Dowels-to-rib pads locking welds (ONS-1)	Alloy 69	B	N	A	A	A	A	A	A	A	N
Upper Grid Assembly											
Upper grid fuel assembly support pad items: pad, Alloy X-750 dowels, cap screw, and their locking welds	304 SS with 308L SS weld, except Alloy X-750 dowel with Alloy 82 weld	B	E or A (Note 3)	A	N or A (Note 4)	N or A (Note 4)	A	E	A	N or A (Note 4)	E/N
Rib-to-ring cap screws	304 SS	B	A	A	N	N	A	A	A	N	N
Alloy X-750 alignment dowels-to-upper grid rib section welds	Alloy 82	B	N	A	A	A	A	A	A	A	N
Control Rod Guide Tube (CRGT) Assembly											
Flange-to-upper grid cap screws	304 SS	B	A	A	N	N	A	A	A	N	N
CRGT spacer castings	CF3M	B	A	A	A	A	P	A	A	A	P
CRGT tubes	304L SS	B	A	A	N	A	A	A	A	A	N
CRGT sectors	304L SS	B	A	A	N	A	A	A	A	A	N

Table 3-1 (continued)
Final disposition of non-Category A component items and welds in B&W PWR internals (SLR, note 1)

Component Item or Weld	Material	Initial Category	SCC	IASCC	Wear	Fatigue	TE	IE	VS	ISR/IC	Final Group
Control Rod Guide Tube (CRGT) Assembly (cont.)											
Reactor vessel level monitoring system (RVLMS) brazement guide assembly—J-bolt and nut (ANO-1)	304L SS	B	A	A	N	N	A	A	A	N	N
Core Support Shield (CSS) Assembly											
CSS cylinder	304 SS	C	N	A	A	E (Notes 2,5)	A	A	A	A	E/N
CSS top flange	304 SS	C	N	A	P	E (Note 2)	A	A	A	A	P/E/N
CSS bottom flange	304 SS	C	N	A	A	E (Notes 2,5)	A	A	A	A	E/N
CSS top flange circ. weld	308L SS	C	A	A	A	E (Notes 2,5)	A	A	A	A	E
CSS bottom flange circ. weld	308L SS	C	A	A	A	E (Notes 2,5)	A	A	A	A	E
Upper core barrel (UCB) bolts	Alloy A-286 or Alloy X-750	C	P	A	P	P	A	A	A	P	P
Remaining surveillance specimen holder tube (SSHT) assembly item: bearing (ONS-1, ONS-2, ONS-3)	Type 17-4 PH	B	A	A	A	A	N	A	A	A	N
Vent Valve Assembly											
Vent valve top retaining ring	Type 15-5 PH	B	A	A	A	A	P	A	A	A	P
Vent valve bottom retaining ring	Type 15-5 PH	B	A	A	A	A	P	A	A	A	P
Original locking device: pressure plate	304 SS	B	A	A	P	A	A	A	A	A	P
Original locking device: spring retainer	304 SS	B	A	A	P	A	A	A	A	A	P

Table 3-1 (continued)
Final disposition of non-Category A component items and welds in B&W PWR internals (SLR, note 1)

Component Item or Weld	Material	Initial Category	SCC	IASCC	Wear	Fatigue	TE	IE	VS	ISR/IC	Final Group
Vent Valve Assembly (cont.)											
Original locking device: spring	Alloy A-286	B	A	A	P	A	A	A	A	A	P
Original locking device: U-cover	304 SS	B	A	A	P	A	A	A	A	A	P
Original locking device: key ring	Type 431	B	A	A	A	A	P	A	A	A	P
Original locking device: pin	Type 431	B	A	A	A	A	P	A	A	A	P
Modified locking device: bolted block	Alloy 600	B	P	A	A	A	A	A	A	A	P
Modified locking device: jackscrew crimped locking cup	Alloy 600	B	P	A	A	A	A	A	A	A	P
Modified locking device: bolt crimped locking cups	Alloy 600	B	P	A	A	A	A	A	A	A	P
Core Barrel Assembly											
Core barrel top and bottom cylinders	304 SS	C	P/N (Note 6)	P/N (Note 7)	A	P (Notes 2,5)	A	P/N (Notes 6,7)	A	A	P/N
Core barrel cylinder top flange	304 SS	C	P/N (Note 6)	A	A	P (Note 2)	A	P/N (Note 6)	A	A	P/N
Core barrel cylinder bottom flange	304 SS	B	A	A	A	P (Notes 2,5)	A	A	A	A	P
Core barrel cylinder top flange circ. weld	308L SS	C	A	A	A	P (Note 2)	A	N	A	A	P/N
Core barrel cylinder bottom flange circ. weld	308L SS	B	A	A	A	P (Notes 2,5)	A	A	A	A	P
Core barrel top and bottom cylinders vertical seam welds	308L SS	B	A	N	A	P (Notes 2,5)	A	N	A	A	P/N

Table 3-1 (continued)
Final disposition of non-Category A component items and welds in B&W PWR internals (SLR, note 1)

Component Item or Weld	Material	Initial Category	SCC	IASCC	Wear	Fatigue	TE	IE	VS	ISR/IC	Final Group
Core Barrel Assembly (cont.)											
Core barrel top and bottom cylinders center circ. weld	308L SS	C	A	P/N (Note 7)	A	P (Notes 2,5)	A	P/N (Note 7)	A	A	P/N
Alloy X-750 dowels-to-top and bottom core barrel cylinders fillet welds	Alloy 82	B	N	A	A	A	A	N	A	A	N
Lower core barrel (LCB) bolts (ONS-1)	304 SS	B	A	A	N	N	A	A	A	N	N
LCB Bolts	Alloy A-286 or Alloy X-750	B	P	A	P	P	A	A	A	P	P
Compression collars for replacement Alloy X-750 LCB bolts (DB)	Alloy X-750	B	A	A	P	P	A	A	A	P	P
Thermal shield top and bottom cylinders	304 SS	B	A	A	A	A	A	N	A	A	N
Thermal shield top and bottom cylinders vertical seam welds	308L SS	B	N	N	A	A	A	N	A	A	N
Thermal shield top and bottom cylinders center circ. weld	308L SS	B	N	N	A	A	A	N	A	A	N
Thermal shield plugging welds (ANO-1)	308L SS	B	A	N	A	A	A	N	A	A	N
Remaining SSHT assembly items and welds except hex head bolts (ONS-1, ONS-2, ONS-3, ANO-1)	Alloy X-750, 304 SS, or 308/308L SS	B	A	A	A	A	A	N	A	A	N
Upper thermal shield (UTS) bolts	Alloy A-286 or Alloy X-750	B	E	A	A	A	A	A	A	A	E
Alloy X-750 dowels-to-core barrel cylinder welds (both ends)	Alloy 82	B	N	A	A	A	A	N	A	A	N
Remaining SSHT assembly item: hex head bolts (ONS-1, ONS-2, ONS-3, ANO-1)	304 SS	B	A	A	N	N	A	N	A	N	N
Baffle plates	304 SS	B	A	A	A	A	A	P	P	A	P
Former plates	304 SS	C	A	A	A	A	A	E	E	A	E

Table 3-1 (continued)
Final disposition of non-Category A component items and welds in B&W PWR internals (SLR, note 1)

Component Item or Weld	Material	Initial Category	SCC	IASCC	Wear	Fatigue	TE	IE	VS	ISR/IC	Final Group
Core Barrel Assembly (cont.)											
Core barrel top and bottom cylinders-to former plate dowels	Alloy X-750	B	A	A	A	A	A	N	A	A	N
Core barrel-to-former (CB) bolts (Note 8)	304 SS	C	A	E	E	E	A	E	A	E	E
Baffle-to-former (FB) bolts (Note 8)	304 SS	C	A	P	P	P	A	P	P	P	P
Internal baffle-to-baffle (BB) bolts (Note 8)	304 SS	C	A	E	E	E	A	E	E	E	E
External baffle-to-baffle (BB) bolts (Note 8)	304 SS	C	A	E	E	E	A	E	E	E	E
Accessible locking devices and locking welds (FB bolts and internal BB bolts)	304 SS locking device, 308L SS locking weld	B	A	P or A (Note 9)	A	A	A	P	A	A	P
Inaccessible locking devices and locking welds (CB bolts and external BB bolts)	304 SS locking device, 308L SS locking weld	B	A	E or A (Note 10)	A	A	A	E	A	A	E
SSHT bolts (DB)	Alloy X-750	B	A	P	P	P	A	P	A	P	P
SSHT bolts compression collars and washers (DB)	Alloy X-750	B	A	A	P	P	A	P	A	P	P
SSHT bolts tie plates and crimped locking cups (DB)	304L SS	B	A	A	A	A	A	P	A	A	P
Lower Grid Assembly											
Lower grid rib section	304 SS	C	A	A	A	A	A	P	A	A	P
Lower grid fuel assembly support pad items: pad, pad-to-rib section weld, Alloy X-750 dowels, cap screw, and their locking welds	304SS with 308L SS weld, except Alloy X-750 dowel with Alloy 69 weld	B	P, E, or A (Notes 3,11)	A	N or A (Note 4)	N or A (Note 4)	A	E	A	N or A (Note 4)	P/E/N
Lower grid rib-to-shell forging cap screws	304 SS	B	A	A	N	N	A	A	A	N	N

Table 3-1 (continued)
Final disposition of non-Category A component items and welds in B&W PWR internals (SLR, note 1)

Component Item or Weld	Material	Initial Category	SCC	IASCC	Wear	Fatigue	TE	IE	VS	ISR/IC	Final Group
Lower Grid Assembly (cont.)											
Lower grid assembly Alloy X-750 dowel-to-guide block weld (except DB)	Alloy 82	B	P	A	A	A	A	A	A	A	P
Bolts for guide blocks (except DB)	304 SS	B	A	A	N	N	A	A	A	N	N
Alloy X-750 dowels-to-lower grid shell forging welds	Alloy 82	B	N	A	A	A	A	A	A	A	N
Alloy X-750 dowels-to-lower grid rib section welds	Alloy 69	B	N	A	A	A	A	A	A	A	N
Lower grid support post pipe cap screws	304 SS	B	A	A	N	N	A	A	A	N	N
Replacement lower thermal shield (LTS) bolts/studs	Alloy A-286 or Alloy X-750	B	E	A	A	A	A	A	A	A	E
Replacement LTS nuts (ONS-1, ONS-2, ONS-3)	Alloy X-750	B	E	A	A	A	A	A	A	A	E
Flow Distributor Assembly											
Flow distributor (FD) bolts	Alloy A-286 or Alloy X-750	B	P	A	A	P	A	A	A	A	P
Alloy X-750 dowels-to-flow distributor flange welds	Alloy 82	B	N	A	A	A	A	A	A	A	N
In-Core Monitoring Instrumentation (IMI) Guide Tube Assembly											
IMI guide tubes	304 SS	B	A	A	A	A	A	N	A	A	N
IMI guide tube nuts	304 SS	B	A	A	N	N	A	A	A	N	N
IMI guide tube spiders	CF8	B	A	A	A	A	N	P	A	A	P/N
IMI guide tube spiders-to-lower grid rib section welds	308L SS	B	A	A	A	A	A	P	A	A	P

Notes:

1. This table is for the SLR period (60–80 years). MRP-231, Revision 4 [15] supports these final dispositions and the categorizations in Tables 4-1, 4-4, and 5-1. Nomenclature in this and subsequent tables has been modified from previous revisions of this guideline for clarification.
2. Fatigue is permitted to be addressed by analysis in lieu of inspection for this component item or weld.
3. Only the Alloy X-750 dowel locking weld in the listed component items for the upper or lower grid fuel assembly support pads is susceptible to SCC and categorized as Primary (P) or Expansion (E) for SCC. Other component items are Category A for SCC.

4. Only the cap screws for the fuel assembly support pads are categorized as No Additional Measures (N) for ISR/IC/fatigue/wear. The other component items and welds are Category A for ISR/IC/fatigue/wear.
5. The component was categorized as Primary (P) (core barrel cylinder items) or Expansion (E) (core support shield cylinder items) for fatigue, but the examination coverage only applies to the CSS top flange/core barrel top flange, top flange weld, and top cylinder based on the justification in MRP-231 [15].
6. Primary (P) is applicable to plants that have had weld repairs performed in their top flange circumferential weld after the stress relief treatment. For plants that have not had weld repairs performed in their top flange circumferential weld after the stress relief treatment, No Additional Measures (N) is applicable.
7. Primary (P) is applicable to plants that have had weld repairs performed in their center circumferential weld after the stress relief treatment. For plants that have not had weld repairs performed in their center circumferential weld after the stress relief treatment, No Additional Measures (N) is applicable.
8. Overload is not one of the eight age-related degradation mechanisms considered in MRP-189, Rev. 3 [10]. As noted in Note 1 to Table 3-2 in reference 15, the FB bolts are classified as Primary (P) and the CB bolts and the internal and external BB bolts as Expansion (E) for overload.
9. Only the locking devices for the FB bolts and internal BB bolts are categorized as Primary (P) for IASCC. The locking device welds for the FB bolts and internal BB bolts are Category A for IASCC.
10. Only the locking devices for the external BB bolts are Expansion (E) for IASCC. The locking devices for the CB bolts and external BB bolt/CB bolt locking device welds are Category A for IASCC.
11. Primary (P) for DB and Expansion (E) for ONS-1, ONS-2, ONS-3, and ANO-1 because of differences in configuration.

Table 3-2
Final disposition of component items and welds in CE PWR internals (Note 9)

Component	Material	Initial Safety Category (Note 1)	SCC	IASCC	Wear	Fatigue	TE (Note 2)	IE (Note 2)	VS	ISR/IC	Final Disposition
Upper Internals Assembly											
Fuel alignment plate	304 SS	B	E	E	N	P, E	A	P, E	A	A	P, E
Lower Support Structure											
Core support plate	304 SS 304L SS	A	N	N	N	P	A	P	N	A	P (Note 3)
Fuel alignment pins	304 SS	A	A	N	X	A	A	X	N	X	X (Note 3)
System 80 fuel alignment pins	A286 SS	A	X	X	N	X	A	X	N	X	X (Note 3)
Core support columns	304 SS	A	E	E	A	E	A	E	N	A	E (Note 3)
Core support columns	CF8	A	E	E	A	E	E	E	N	A	E (Note 3)
System 80 core support deep beams (Note 5)	304 SS	C	P	P	A	P	A	P	N	A	P
Core support beams (Note 6)	304 SS	A	E	A	A	E	A	A	A	A	E (Note 3)
CEA Shroud Assemblies											
Instrument tubes and supports (Note 7)	304 SS	B	P, E	A	A	P, E	A	A	A	A	P, E
CEA shroud bolts	A286 SS	B	A	P	N	P	A	P	A	P	P
Core Support Barrel Assembly											
Upper cylinder girth welds (UFW and UGW)	304 SS	B	P, E	P, E	A	N	A	P, E	A	A	P, E
Upper cylinder axial welds (UAW)	304 SS	B	E	E	A	N	A	E	A	A	E
Lower cylinder girth welds (MGW and LGW/LFW)	304 SS	B	P, E	P, E	A	N	A	P, E	A	A	P, E
lower cylinder axial welds (MAW and LAW)	304 SS	B	E	E	A	N	A	E	A	A	E
Upper core barrel flange	304 SS	B	N	A	X	N	A	A	A	A	X

Table 3-2 (continued)
Final disposition of component items and welds in CE PWR internals (Note 9)

Component	Material	Initial Safety Category (Note 1)	SCC	IASCC	Wear	Fatigue	TE (Note 2)	IE (Note 2)	VS	ISR/IC	Final Disposition
Core Support Barrel Assembly											
Lower core barrel flange	304 SS	B	N	A	A	N	A	A	A	A	N
Lower CSB flexure weld (CSBFW) (Note 8)	304 SS	B	E	A	A	P	A	A	A	A	P, E
Core stabilizing lug shim bolts	X-750	B	X	A	X	A	A	A	A	A	X
Core Shroud Assembly											
Shroud plates	304 SS	B	N	P	A	P	A	P	P	A	P
Former plates	304 SS	B	N	P	A	P	A	P	P	A	P
Core shroud tie rods	348 SS	B	A	N	P	N	A	N	N	P	P
Core shroud tie rod nuts	316 SS	B	A	N	P	N	A	N	N	P	P
Guide lugs (Note 4)	304 SS 348 SS	A	N	A	X	A	A	N	A	X	X (Note 3)
Guide lug inserts (Note 4)	304 SS 321 SS	A	A	A	X	A	A	N	A	A	X (Note 3)
Guide lug insert bolts (Note 4)	A286 SS 316 SS	A	A	A	X	N	A	N	A	X	X (Note 3)
Top-mounted ICI											
ICI Thimble tubes - Lower	Zircaloy-4	B	A	N	N	A	A	N	X	A	X
System 80 Bottom-mounted ICI											
ICI Nozzles	304 SS	B	N	N	N	A	A	N	N	A	N

Notes:

1. Initial categorization from MRP-191, Revision 2 [12].
2. The significance of thermal and irradiation embrittlement is directly related to the probability of a flaw existing in the component. There are no recommendations for inspection to determine embrittlement level because these mechanisms cannot be directly observed. However, potential embrittlement must be considered in flaw tolerance evaluations.
3. This component was added to maintain consistency with MRP-227, Revision 1-A [18] regardless of MRP-191, Revision 2 [12] safety categorization. Some of these are needed to manage a specific aging-related degradation mechanism, whereas others address commitments from previous safety evaluations of the I&E guidelines. These items are not included in MRP-232 [16] based on their safety categorization.
4. Bolt deterioration may lead to degradation in lug fixtures. Inspection recommendations relate to the entire guide lug fixture.

5. This component is referred to as the deep beams throughout the rest of this document.
6. This component is referred to as the lower core support beams throughout the rest of this document.
7. This component is referred to as the instrument guide tubes and supports throughout the rest of this document.
8. This component is referred to as the core support barrel flexure weld throughout the rest of this document.
9. This table is based on inputs for 60–80 years of operation [16]. Differences between 40–60 years of operation and 60–80 years of operation are not included in this table, but are clearly indicated in the Section 4 tables.

Table 3-3
Final disposition of component items and welds in Westinghouse PWR internals (Note 12)

Component	Material	Initial Safety Category (Note 1)	SCC	IASCC	Wear	Fatigue	TE (Note 2)	IE (Note 2)	VS	ISR/IC	Final Disposition
Control Rod Guide Tube Assemblies and Flow Downcomers											
C-tubes	304 SS	B	A	A	X	N	A	A	A	A	X
Flanges—lower (Note 6)	304 SS	B	P, E	P, E	A	P, E	A	P, E	A	A	P, E
	CF8	B	P, E	P, E	A	P, E	P, E	P, E	A	A	P, E
Guide plates/cards	304 SS	C	N	A	X	N	A	A	A	A	X
	316L SS	C	N	A	X	N	A	A	A	A	X
	CF8	C	N	A	X	N	N	A	A	A	X
Sheaths	304 SS	C	A	A	X	N	A	A	A	A	X
Guide tube support pins	X-750	C	X	X	X	X	A	X	A	N	X
Upper support plate assembly											
Upper support ring or skirt	CF8	A	X	A	A	X	N	A	A	A	X (Note 3)
	304 SS	A	X	A	A	X	A	A	A	A	X (Note 3)
Upper core plate (UCP) and fuel alignment pins											
Fuel alignment pins (Note 7)	304 SS	B	A	N	X	N	A	N	A	A	X
Protective skirt bolts	316 SS	B	N	N	N	N	A	N	A	N	N
Upper core plate	304 SS	B	A	E	A	N	A	E	A	A	E
UCP Insert	304 SS Stellite	B	A	A	X	A	A	N	A	A	X

Table 3-3 (continued)
Final disposition of component items and welds in Westinghouse PWR internals (Note 12)

Component	Material	Initial Safety Category (Note 1)	SCC	IASCC	Wear	Fatigue	TE (Note 2)	IE (Note 2)	VS	ISR/IC	Final Disposition
Upper instrumentation conduit and supports											
Brackets, clamps, terminal blocks, and conduit straps	304 SS	B	N	A	A	N	A	A	A	A	N
	302 SS	B	N	A	A	N	A	A	A	A	N
Conduit seal assembly: body, tubesheets, tubesheet welds	304 SS	B	N	A	A	N	A	A	A	A	N
Conduit seal assembly: tubes	304 SS	B	N	A	A	N	A	A	A	A	N
Baffle and Former Assembly											
Baffle bolt locking devices	304 SS	B	A	P	A	P	A	P	N	A	P
Baffle-edge bolts	316 SS	B	A	P	P	P	A	P	P	P	P
	347 SS	B	A	P	P	P	A	P	P	P	P
Bracket bolts	347 SS	B	A	P	P	P	A	P	P	P	P
Baffle-former bolts	316 SS	C	A	P	P	P	A	P	P	P	P
	347 SS	C	A	P	P	P	A	P	P	P	P
Corner bolts	347 SS	C	A	P	P	P	A	P	P	P	P
Barrel-former bolts	316 SS	B	A	E	E	E	A	E	E	E	E
	347 SS	B	A	E	E	E	A	E	E	E	E
Baffle plates (Note 4)	304 SS	A	A	N	A	N	A	N	P	A	P (Note 3)
Former plates (Note 4)	304 SS	A	A	N	A	N	A	N	P	A	P (Note 3)

Table 3-3 (continued)
Final disposition of component items and welds in Westinghouse PWR internals (Note 12)

Component	Material	Initial Safety Category (Note 1)	SCC	IASCC	Wear	Fatigue	TE (Note 2)	IE (Note 2)	VS	ISR/IC	Final Disposition
BMI Column Assemblies											
BMI column bolts	316 SS	B	A	N	N	N	A	N	N	N	N
BMI column bodies	304 SS	B	N	A	N	E	A	A	A	A	E
BMI column collars	304 SS	B	A	N	A	N	A	N	N	A	N
BMI column cruciforms	304 SS	B	A	N	N	E	A	E	N	A	E
	CF8	B	A	N	N	E	E	E	N	A	E
Core Barrel Assembly											
Core barrel flange	304 SS	B	N	A	X	N	A	A	A	A	X
Core barrel outlet nozzles	304 SS	B	N	A	N	N	A	A	A	A	N
Safety injection nozzle interface	304 SS	B	N	A	N	N	A	A	A	A	N
Core Barrel Assembly (cont.)											
Lower core barrel axial welds (MAW and LAW)	304 SS	B	E	E	A	N	A	E	N	A	E
Lower girth weld (LGW)	304 SS	B	P	P	A	N	A	P	N	A	P
Lower flange weld (LFW)	304 SS	B	E	A	A	N	A	A	A	A	E
Upper core barrel axial welds (UAW)	304 SS	B	E	A	A	N	A	A	A	A	E
Upper flange weld (UFW)	304 SS	B	P	A	A	N	A	A	A	A	P
Upper girth weld (UGW)	304 SS	B	E	A	A	N	A	A	A	A	E

Table 3-3 (continued)
Final disposition of component items and welds in Westinghouse PWR internals (Note 12)

Component	Material	Initial Safety Category (Note 1)	SCC	IASCC	Wear	Fatigue	TE (Note 2)	IE (Note 2)	VS	ISR/IC	Final Disposition
Flux thimbles (tubes)											
Flux thimbles tube plugs	304 SS	B	N	N	A	N	A	N	N	A	N
	316 SS	B	N	N	A	N	A	N	N	A	N
	308 SS	B	N	N	A	N	A	N	N	A	N
	A600	B	N	N	A	N	A	N	N	A	N
Flux thimbles (tubes) (Note 11)	316 SS	B	N	N	X	N	A	N	N	A	X
	A600	B	N	N	X	N	A	N	N	A	X
Lower core plate (LCP) and fuel alignment pins											
Fuel alignment pins (Note 8)	304 SS	B	A	N	X	A	A	N	N	A	X
XL LCP fuel alignment pins (Note 9)	316 SS	B	A	X	X	X	A	X	N	A	X
LCP and manway bolts	316 SS	B	A	N	N	N	A	N	N	N	N
Lower core plate	304 SS	A	A	X	X	X	A	X	N	A	X (Note 3)
XL lower core plate	304 SS	A	N	X	X	X	A	X	N	A	X (Note 3)
Lower support casting or forging											
Lower support casting	CF8	A	E	A	A	N	E	A	A	A	E (Note 3)
Lower support forging	304 SS	A	E	A	A	N	A	A	A	A	E (Note 3)
LSC assemblies											
LSC bodies	CF8	A	A	E	A	N	N	E	N	A	E (Note 3)
	304 SS	A	A	E	A	N	A	E	N	A	E (Note 3)
LSC bolts	304 SS	B	A	E	E	E	A	E	E	E	E
	316 SS	B	A	E	E	E	A	E	E	E	E

Table 3-3 (continued)
Final disposition of component items and welds in Westinghouse PWR internals (Note 12)

Component	Material	Initial Safety Category (Note 1)	SCC	IASCC	Wear	Fatigue	TE (Note 2)	IE (Note 2)	VS	ISR/IC	Final Disposition
Neutron Panels/Thermal Shield											
Thermal shield bolts	316 SS	B	A	A	N	N	A	A	A	N	N
Thermal shield flexures	304 SS	B	P	A	A	P	A	A	A	A	P
	316 SS	B	P	A	A	P	A	A	A	A	P
Radial Support keys											
Radial support keys	Stellite	C	A	A	X	A	A	A	A	A	X
Interfacing Components											
Internals hold-down spring (Note 5)	304 SS	B	A	A	P	N	A	A	A	A	P
UCP alignment pins	Stellite	A	A	A	X	A	A	A	A	A	X (Note 3)
Clevis inserts (Note 10)	Stellite	C	A	A	X	N	A	A	A	A	X
Clevis insert dowels	Alloy 600	B	A	A	A	X	A	A	A	A	X
Clevis insert bolts	X-750	B	X	A	X	A	A	A	A	A	X
Thermal sleeves	304 SS	C	A	A	X	X	A	A	A	A	X
Thermal sleeve guide funnels	304 SS	B	A	A	N	A	A	A	A	A	N
	CF8	B	A	A	N	A	N	A	A	A	N

Notes:

1. Initial categorization from MRP-191, Revision 2 [12].
2. The significance of thermal and irradiation embrittlement is directly related to the probability of a flaw existing in the component. There are no recommendations for inspection to determine embrittlement level because these mechanisms cannot be directly observed. However, potential embrittlement must be considered in flaw tolerance evaluations.
3. This component was added to maintain consistency with MRP-227, Revision 1-A [18] regardless of MRP-191, Revision 2 [12] safety categorization. Some of these are needed to manage a specific aging-related degradation mechanism, whereas others address commitments from previous safety evaluations of the I&E guidelines. These items are not included in MRP-232 [16] based on their safety categorization.
4. The concern is a result of the collective interaction of all components that comprise the assembly and not strictly focused on the plates. This component is inherently referred to when the term baffle-former assembly is used throughout this document.
5. The hold-down spring does not directly degrade by wear. It first degrades by loss in preload, which leads to wear when an inadequate preload remains.
6. This component is referred to as the control rod guide tube assembly lower flange welds the throughout the rest of this document.
7. This component is referred to as the upper fuel alignment pins throughout the rest of this document.

8. This component is referred to as the lower fuel alignment pins throughout the rest of this document.
9. This component is referred to as the XL lower fuel alignment pins throughout the rest of this document.
10. This component is referred to as the clevis bearing Stellite wear surface throughout the rest of this document.
11. The flux thimbles (tubes) are evaluated as a reactor internals component but are part of the RCS pressure boundary.
12. This table is based on inputs for 60–80 years of operation [16]. Differences between 40–60 years of operation and 60–80 years of operation are not included in this table, but are clearly indicated in the Section 4 tables.

Section 4: PWR Internals Management Requirements

The goal of the PWR internals I&E guidelines is to monitor the condition of the internals to maintain appropriate levels of plant safety and reliability. When properly managed, the plants will fulfill their applicable license renewal or SLR commitments through application of these guidelines.

I&E in support of aging management requirements typically consists of the following:

- Consideration of aging mechanism susceptibility and selection of items requiring aging management
- Selection of the type of examination or other methodologies appropriate for each applicable degradation mechanism
- Specification of the required level of examination qualification
- Schedule of first examination and frequency of any subsequent examinations
- Item/component inspection sampling and coverage
- Expansion of scope if sufficient evidence of degradation is observed
- Examination acceptance criteria
- Methods for evaluating examination results not meeting the examination acceptance criteria
- Updating the program based on industry-wide results
- Contingency measures to repair, replace, or mitigate

The listed elements of inspection and evaluation interrelate. For example, the particulars of the examination acceptance criteria may affect the rules for sampling or frequency of examination.

This section of the I&E guidelines specifies aging management requirements that are appropriate to detect the expected effects of the degradation mechanisms, are considered acceptable for the development of an engineering program, and provide for partial satisfaction of an AMP for license renewal. The goal of the engineering program is to satisfactorily manage the utility

asset and to accomplish the license renewal AMP goal, which is to ensure the continued achievement of safety-related functions and functionality of the PWR internals. The technical bases used to develop these aging management requirements are documented elsewhere [15, 16].

Some of the aging management requirements listed (such as examination acceptance criteria) deserve greater elaboration and are therefore discussed in Section 5.

Section 4.1 describes the overall aging management approach. Section 4.2 describes the various examination methodologies, ranging from general condition visual examinations to more rigorous visual, surface, and volumetric examinations, with a final subsection that describes physical measurement. Section 4.3 summarizes the examination requirements that are recommended for two groups of PWR internals, Primary and Expansion.

The intent of these guidelines is to take advantage of inspection/ examination scheduling flexibility coinciding with removal of the core support structure (particularly the core barrel) in conjunction with existing protocols and flexibility associated with inspection intervals for ASME required periodic inspections (for example, 10-year ISI exams). In all cases, the flexibility of the scheduling process and protocol for the timing of ASME inspection intervals as delineated in the Section 4 tables is intended to be the driving factor; thus, the PWR internals inspections and examinations specified within this guideline benefit from the scheduling flexibility allowed by ASME Code Section XI IWA-2430. For example, the term "10-year ISI interval" is intended to mean the plant's existing schedule associated with removal of the core barrel. However, this does not mean that the inspections must be completed during the same outages as the ASME Code Section XI inspections. For instance, inspections that do not require removal of the core barrel can be completed during any refueling outage.

If components are repaired, modified, or replaced such that the effects of aging are mitigated, then the demonstration of the adequacy of repair, replacement, or modification activities is the responsibility of the owner. In addition, repair, replacement, or modification activities may warrant revision to the scope and/or frequency of the generic requirements stated in these guidelines. This includes reestablishing the technical basis for the replaced components (if not fully mitigated) and the technical basis for examination (and reinspection interval) of any linked Expansion components, which was developed on the basis of expert panel solicitation. Individual utilities will be responsible for the technical justification of such activities to demonstrate their acceptability for different requirements than those stated in these guidelines. Appendix C: "Options for Alternate Aging Management Approaches for Westinghouse and CE Designs" has been included to provide utilities with guidance on the minimum content to consider when developing such a technical justification for a repair, replacement, modification, or other alternate approach.

The requirements for the PWR internals components in the Existing Programs group are described in Section 4.4. As described in Section 4.5, those PWR internals components in the No Additional Measures group require no further actions with respect to management of aging degradation, other than to continue any existing requirements that affect those components.

4.1 Aging Management Approach

The aging management approach for PWR internals consists of four major elements:

1. Component categorization and aging management strategy development, including a description of the overall sampling process
2. Identification of aging management methods for PWR internals that are both appropriate and based on an adequate level of applicable experience
3. Qualification of the recommended methods that is based on adequate technical justification
4. Implementation of the recommendations based on the NEI 03-08 Guideline for the Management of Materials Issues [1].

Each element in the approach is described in the following subsections.

4.1.1 PWR Internals Categorization and Aging Management Strategy Development

The PWR internals categorization and aging management strategy development were summarized in Section 3, including the overall sampling strategy.

4.1.2 Selection of Established Aging Management Methods

The second part of the aging management approach involved the selection of aging management methods for the PWR internals. The criteria for selection were based on the following:

1. The methods should be appropriate for the characterization of particular age-related degradation effects.
2. The methods should concentrate on techniques that have been subject to widespread application.

For these two reasons, the selected aging management methods emphasize existing, well-proven techniques that have been subject to widespread, relevant application. These methods are described in Section 4.2.

4.1.3 Aging Management Method Qualification

An extensive experience base for the aging management methods described in this section of the I&E guidelines permits selection of known aging management methods. Many inspections specified herein are remote visual examinations, whether visual VT-1, EVT-1, or VT-3. Remote visual

examinations must meet the additional generic requirements of the MRP-228 Inspection Standard [3] for equipment and training of personnel, and in the case of visual EVT-1, a surface condition assessment and limitations on camera angle and scan speed. Volumetric examination of bolting, which has well-established procedural qualifications [21], requires technical justification and a performance demonstration [3]. The other qualified methodologies specified herein require technical justification and must meet the requirements of Section 5 in MRP-228 [3]. This level of qualification is appropriate. Failures of internals do not result in pressure boundary failures. Internals either are of robust design, resulting in flaw tolerance well above the detection level that can be established via technical justification, or consist of assemblies for which a single (or often multiple) component item failure does not prevent the assembly from performing its function.

The MRP-228 Inspection Standard [3] provides detailed guidance for conducting and justifying the selected examination techniques and the technical justifications required for different examination methods and component configurations.

4.1.4 Implementation of Aging Management Requirements

Information on the implementation of the aging management requirements is provided in Section 7 of these I&E guidelines.

4.2 Inspection Methods for Monitoring Aging

The inspection methods described in these guidelines include visual examinations, surface examinations, volumetric examinations, and physical measurements. Each of these methods is suitable for managing the effects of one or more aging degradation mechanisms for PWR internals, depending on the following:

- Tolerance of the component functionality to the progression of particular effects
- Accessibility of the component by the equipment needed for the examination
- Suitability of the equipment for detecting the particular effect

When appropriate, the examination methods selected for use in these guidelines are as specified in U.S. Nuclear Regulatory Commission (NRC) approved editions and addenda of ASME B&PV Code Section XI [2], as specified and conditioned by 10 CFR 50.55a [4].

4.2.1 Visual (VT-3) Examination

One examination method selected for use in these guidelines, which has an extensive history of use for PWR internals, is visual (VT-3) examination. Such visual examinations are exclusively relied on for detection of general degradation of PWR internals subject to Table IWB-2500-1 Category B-N-3 [2] requirements. Visual (VT-3) examinations are conducted to determine the

general mechanical and structural condition of components by detecting discontinuities and imperfections, such as loss of integrity at bolted or welded connections, loose or missing parts, debris, corrosion, wear, or erosion; and by identifying conditions that could affect operational or functional adequacy of components. This type of examination has been determined to be acceptable for the continued monitoring of many of the internals within the scope of these guidelines.

When specified in these guidelines, a visual (VT-3) examination is conducted in accordance with the requirements of the MRP-228 Inspection Standard [3]. Visual (VT-3) examinations of internals are conducted using remote examination techniques, because of personnel radiation exposure issues.

A large amount of industry experience is available relative to the application of visual (VT-3) examination procedures for examining PWR internals; however, implementation of character height requirements for VT-3 is relatively new. In fact, the resolution requirements for both visual VT-3 and visual VT-1 were both changed to more exacting standards with the 1998 ASME Code Section XI. The change from no character height for visual (VT-3) and a 0.03 in. (0.76 mm) black line resolution for visual (VT-1) to 0.105 in. (2.67 mm) and 0.044 in. (1.12 mm) character discrimination has resulted in the relative equivalence of the current visual (VT-3) to the previous VT-1 requirements and the current visual (VT-1) to the previous EVT-1 (1/2-mil wire) resolution. Thus, the VT-3 required by these guidelines has greater detection capability than most of the Table IWB-2500-1 B-N-3 [2] examinations previously conducted.

In all cases for which visual (VT-3) has been selected as the examination method to detect cracking in these guidelines, the intent is to find cracked, fractured, or separated welds or base material such as locking tack welds, small component item assembly welds, cracked ligaments of drilled plates, or missing or fractured small component items. In certain instances, VT-3 has demonstrated the capability to detect cracking in the boiling water reactor (BWR) fleet (for instance, as discussed in utility correspondence documented in ML14139A178 [42]).

In addition to the BWR remote visual examination examples mentioned previously, direct visual (VT-3) examinations of component supports using ASME B&PV Code Section XI Article IWF requirements over the past 40 years have demonstrated the capability to detect relevant conditions similar to those being sought in these guidelines. Many of the visual (VT-3) relevant and nonrelevant conditions noted in IWF-3410 are directly transferrable to the guidance employed in the MRP-228 inspection standard. Furthermore, in much the way that an examiner conducts a visual (VT-3) exam of a structural support component, upon detection of a potential indication, an examiner is motivated to observe the area of interest more closely; thus, the remote VT-3 examiner would simply “zoom in” or move the camera closer to the anomaly to obtain a better view of, understand, and document the condition.

4.2.2 Visual (VT-1 and EVT-1) Examinations

Other examination methods selected for use in these guidelines are visual (VT-1 and EVT-1) examinations. The visual (VT-1) examinations and the enhanced visual (EVT-1) examination were selected for situations in which a greater degree of detection capability, as well as sizing capability, is required, over and above the capability inherent in visual (VT-3) examinations to manage the aging effects. Unlike the detection of general degradation conditions by visual (VT-3) examination, visual (VT-1) and enhanced visual (EVT-1) examinations are conducted to detect and size discontinuities and imperfections on the surface of components, including such conditions as cracks, wear, corrosion, or erosion. Specifically, VT-1 is used for the detection and sizing of surface discontinuities such as gaps, whereas EVT-1 is used for the detection of surface-breaking flaws.

When specified in these guidelines, a visual (VT-1) examination is conducted in accordance with the requirements of the MRP-228 Inspection Standard [3]. Enhanced visual (EVT-1) examination is also conducted in accordance with the requirements described for visual (VT-1) examination with additional requirements (such as camera scanning speed) as specified in the MRP-228 Inspection Standard [3]. When adjacent base metal is specified in the inspection coverage requirement, it is intended to include the base metal heat-affected zone (HAZ) adjacent to the weld. The adjacent base metal to be examined is defined in MRP-228 and is referenced in the Section 4 Primary and Expansion component tables in this document.

From a historical perspective, as with visual (VT-3) examination, the current ASME B&PV Code [2] requirements for visual (VT-1) examination became more rigorous than those defined in previous ASME B&PV Code versions. Many previous VT-1 examinations were only required to discern a 0.03 in. (0.76 mm) black line on a gray background. These limitations led the NRC and industry to adopt modified visual examinations for use in detecting flaws discovered in BWR internals. The most recent research conducted by the EPRI Nondestructive Examination (NDE) Center established the VT-1 using the character heights specified in the ASME B&PV Code [2] for resolution demonstration as equally or better able to detect the degradation effects than the modified visual examination requirements developed previously [22]. The current ASME B&PV Code character discrimination has thus been adopted as the standard for the industry's enhanced visual EVT-1 with the enhancement above ASME B&PV Code requirements becoming a surface cleaning assessment and a more stringent acceptable camera angle intended to enhance the ability to detect tight surface-breaking flaws, like those indicative of SCC. The capability of the EVT-1 technique was tested in a round-robin exercise [23]. The round robin concluded that under the current remote visual inspection practices of the industry, EVT-1 is capable of detecting all but the smallest flaws, which makes it an appropriate technique for detecting tight surface-breaking flaws.

4.2.3 Nonqualified Visual Inspection

The EVT-1, VT-1, and VT-3 inspections have detailed quality requirements that include a need for special equipment and trained and qualified inspectors (see MRP-228 for additional information [3]). Many plants do not have personnel or equipment on site meeting these qualifications and requirements, but they do typically have the ability to perform nonqualified visual inspections as part of maintenance or foreign object search and retrieval operations. These nonqualified visual inspections are capable of detecting loose parts and the effects of substantial degradation in the internals [24]. An example of a situation in which a nonqualified visual inspection would be appropriate is checking the core shroud tie rods to ensure that they are still in. This inspection is frequent and checks for very obvious degradation effects, so a visual inspection equivalent to a foreign object search and retrieval inspection is more than adequate. Such inspections will be designated "nonqualified visual inspections" in this report.

4.2.4 Surface Examination

For discontinuities on the surface of components (including cracks), surface examination can be used. Surface examination can also be used to either detect the discontinuity or to provide supplemental characterization of an indication detected by one of the visual examinations (visual VT-3 or VT-1/EVT-1) specified in these guidelines. As a supplemental examination, surface examination may be used to reject or accept relevant indications. A surface examination is an examination that indicates the presence of surface discontinuities, and the ASME B&PV Code [2] lists magnetic particle, liquid penetrant, eddy current, and ultrasonic examination methods as surface examination alternatives. Here, only the electromagnetic testing (ET), also called the eddy current surface examination method, is covered.

When selected for use as an inspection technique or as a supplemental examination, an ET examination is conducted in accordance with the requirements of the MRP-228 Inspection Standard [3].

ET examination is widely used for heat exchanger tubing inspections. Eddy currents are induced in the inspected object by electromagnetic coils, with disruptions in the eddy current flow caused by surface or near-surface anomalies detected by suitable instrumentation. Industry experience with ET examination is robust, especially in the aerospace and petroleum refinery industries. The experience base for PWR nuclear systems is also robust, in particular for examination of steam generator tubing, flux thimbles, and heat exchanger tubing.

4.2.5 Volumetric Examination

Another method selected for use in these guidelines is volumetric examination. Ultrasonic testing (UT) was selected for instances when visual or surface examination is unable to detect the effect of the age-related degradation for some PWR internals. UT was also permitted as an alternative examination for

inspecting core barrel welds for potential cracking degradation. An example of a component for which visual or surface examination may not detect degradation is bolting. For example, IASCC in baffle-former bolts may occur underneath the bolt head and may be undetectable by visual or surface examination unless the bolt is removed and subject to examination over its entire length.

When specified in these guidelines, an ultrasonic examination is conducted in accordance with the requirements of the MRP-228 Inspection Standard [3].

UT is also permissible as an alternative or supplement to the specified visual examinations (visual VT-3 or VT-1/EVT-1) specified in these guidelines. This is consistent with the ASME B&PV Code [2].

The industry has had extensive experience with the application of ultrasonic examination to PWR internals bolts, pins, and fasteners, in particular with baffle–former bolting examinations. The industry also has extensive experience in applying UT to BWR internals to detect intergranular stress corrosion cracking (IGSCC) in stainless steel and nickel-base welded plates, stainless steel internals piping, and nickel-base forgings and bolting.

4.2.6 Physical Measurements

The effects of loss of material caused by wear, the loss of preload or clamping force caused by such mechanisms as thermal and irradiation-enhanced stress relaxation and excessive distortion or deflection caused by VS can be managed, in some cases, by physical measurements.

In some cases, these effects may involve changes in clearances, settings, and physical displacements that can be monitored by visual means, supplemented by physical measurements that characterize the magnitude of the effects. This methodology may be used in conjunction with visual examination, which includes “verifying parameters, such as clearances, settings, and physical displacements.” The measurement of these parameters and their comparison to prescribed limits extends beyond visual (VT-3) examination and will be referred to as “physical measurement of the effects of degradation.”

4.2.7 Subsequent Examination Intervals

When “10-year intervals” or “the 10-year ISI” are stipulated in this document—for example, as the subsequent examination frequency in the Examination Method/Frequency column of Table 4-1 through Table 4-6—this reexamination frequency is intended to be nominally 10 years, consistent with the examination flexibility allowed by ASME Code Section XI Article IWA-2430.

4.2.8 Coordination with ASME Section XI Code Requirements

The MRP-227 PWR internals inspections do NOT supersede any ASME B&PV Code Section XI requirements. It is expected that owners may implement the inspection requirements of these I&E guidelines in coordination with inspections required under the ASME Section XI Code [2] for the PWR

internals, as specified in and conditioned by 10 CFR 50.55a [4]. The inspection requirements of these I&E guidelines have been developed with recognition of such existing Code inspection requirements, but these I&E guidelines do not relieve the owner of responsibility to implement all the Code inspection requirements. Relief from those requirements may be granted only under the provisions of 10 CFR 50.55a. It is the responsibility of the owner to determine whether certain inspections performed according to these I&E guidelines may be credited toward the inspection coverage required under ASME Section XI Code, if so desired. There also may be items for which inspection coverage required by these I&E guidelines is less than the coverage required by ASME Section XI. In such cases, it is the responsibility of the owner to perform any additional inspections to provide total coverage satisfying the Code requirements. These I&E guidelines take no position regarding Code classification of components. The expectation is that if a specified component is not included in the ASME Code 10-year ISI inspection, the item shall be included as an augmentation of the ISI program.

4.3 Primary and Expansion Component Requirements

The aging management requirements for Primary and Expansion PWR internals are covered in this section. As described in Section 3.3, Primary components are those for which the effects of at least one of the eight aging mechanisms is above the screening criteria, and for which additional aging management is needed to manage those effects. The particular additional aging management methods were selected from the methods described in Section 4.2. The implementation schedule for the Expansion components will depend on the findings from the application of the additional aging management methodologies to the Primary components. The coverage requirements for Primary components may include a component sampling strategy. Where specified, the technical bases emphasize condition monitoring of a sample of components most affected by particular aging effects (Primary components), with increases in the sample population (Expansion components) if the condition monitoring programs detect aging effects beyond expected levels. The Expansion criteria are defined in Section 5.

NUREG-1800 [64] and NUREG-1801 [5] and the corresponding documents for SLR, NUREG-2191 [6], and NUREG-2192 [65] provide general guidance for selecting and justifying condition monitoring inspection populations and sample sizes (that is, consistent with Branch Technical Position RLSB-1 [64, 65]); this guidance has been used to develop the requirements for examination coverage. In particular, for redundant systems or multiple connections, examination coverage sampling is based on existing requirements in accepted condition monitoring sampling programs, such as ASME Code Section XI, Subsection IWB-2500 Examination Category B-J piping welds [2] and the Chapter XI.M33 program description in NUREG-1801, Revision 2, for selective leaching [5]. In the ASME Code Section XI, IWB-2500 case, the sample population of 25% of the total population has been determined to be adequate. For the Chapter XI.M33 program, a 20% sample, or no more than 25 component items, are considered a statistically significant sample size. This sample size is also considered appropriate for one-time inspection programs when monitoring AMPs XI.M2, XI.M30, and

XI.M39 are credited and for which no aging effects have been observed or are occurring very slowly and do not affect the component's or structure's intended function during the period of extended operation based on prior operating data. This "program cannot be used for structures or components subjected to known age-related degradation mechanisms or when the environment in the period of extended operation is not expected to be equivalent to that in the prior 40 years. Periodic inspections should be proposed in these cases." For the components for which a sampling strategy is identified in the notes to Table 4-1 through Table 4-6, all aspects of the environment are expected to remain equivalent over the period of extended operation, with the exception of the degree of irradiation effects. The finite element analyses out to 80 calendar years of operation documented in MRP-229 [13] for B&W internals near the core and out to 100 calendar years in MRP-230 [14] for CE and Westinghouse internals near the core show that irradiation effects increase continuously over this period of operation. "Cliffs" in irradiation-related degradation behavior were not observed in the modeling efforts and are not expected for SLR operation. Thus, the periodicity specified to perform a repeated sample, coupled with sample expansion requirements, constitute a robust technical basis for using a sampling strategy.

The requirements for Primary and Expansion components for B&W, CE, and Westinghouse plants are listed in Table 4-1 through Table 4-6. The B&W Primary and Expansion requirements are listed in Table 4-1 and Table 4-4, respectively. The CE Primary and Expansion requirements are listed in Table 4-2 and Table 4-5, respectively. The Westinghouse Primary and Expansion requirements are listed in Table 4-3 and Table 4-6, respectively. These tables contain columns describing the component, any applicability requirement for that component, the degradation effect to be detected, the examination method, the examination coverage, and any linkage between the Primary and Expansion components. The technical bases for the examination requirements are contained in the aging management strategy reports [15, 16]. Utility owners should submit any deviations related to these Section 4 and Section 5 inspections to the relevant materials issue program (IP) responsible for the overarching guidance (for example, EPRI-MRP or PWROG). Multiple deviations are not required. Utility owners that file relief requests to ASME B&PV Code Section XI inspection requirements ("Existing" program components) should also inform the EPRI-MRP of this relief request filing. The impact to the utility's MRP-227 aging management program shall also be evaluated.

Several components in these tables have been noted as "secondary expansions" in the "Expansion Link" column for the Primary component tables or in the "Primary Link" column for the Expansion component tables. This indicates that the specific Expansion component actually does not require further action until degradation in another Expansion component linked to the same Primary component reaches a specified level. An example is the Westinghouse lower support forging or casting, which does not require

action until specific levels of relevant conditions are observed in the core barrel LFW, which, in turn, is linked to the core barrel UFW as an overall Primary component. See the Examination Acceptance and Expansion Criteria tables in Section 5 for more details.

There are no specified examinations in which inadequate coverage is anticipated to be an issue. However, if a utility determines that the examination coverage is questionable with respect to meeting the intent of the guidelines, the condition should be entered in the utility's corrective action program for disposition.

The term "accessible," as used in Table 4-1 through Table 4-6, is defined as a component surface or volume for which an examination is specified in accordance with MRP-228 that can be examined with the technologies specified in MRP-228. This accessibility is consistent with current ASME Section XI practices [2].

In some cases, consistent implementation of the inspection requirements of ASME B&PV Code Section XI or requirements established by the NSSS vendors or IP to address degradation that manifested itself during the current operational life of the PWR fleet is sufficient for management of the postulated age-related degradation. These guidelines credit the Existing programs listed in Table 4-7, Table 4-8, and Table 4-9 for aging management of the listed components. It is the responsibility of the plant owner to ensure that these programs are properly implemented and meet established ASME or industry standards. The continued implementation of this existing guidance has been determined to adequately manage the aging effects for these components.

Table 4-1
B&W plants Primary components

Primary Item	Applicability (Note 1)	Effect (Mechanism)	Expansion Link (Note 2)	Examination Method/Frequency (Notes 2, 3, 4)	Examination Coverage
B1. Plenum Cover Assembly and Core Support Shield Assembly a. Plenum cover weldment rib pads b. Plenum cover support flange c. Plenum cover support ring d. CSS top flange	All plants 40 < years ≤ 80	Loss of material and associated loss of core clamping preload (Wear)	None	The initial one-time physical measurement required by previous revisions of this guideline is complete for all B&W plants; no relevant indications have been observed. Subsequent visual (VT-3) examination during each 10-year ISI interval.	Accessible top surfaces of the plenum cover support ring/plenum cover weldment rib pads and CSS top flange when the RV closure head and plenum assembly are removed. See Figure 4-1.
B2. Control Rod Guide Tube Assembly CRGT spacer castings	All plants 40 < years ≤ 80	Cracking (TE), including the detection of fractured spacers or missing screws (Note 5)	None	Visual (VT-3) examination during the next 10-year ISI interval. Subsequent examination during each 10-year ISI interval.	Accessible surfaces at each of the four screw locations (at every 90°) of 100% of the CRGT spacer castings. (limited accessibility) (Note 6) See Figure 4-5.
B3. Vent Valve Assembly a. Vent valve top retaining ring b. Vent valve bottom retaining ring	All plants 40 < years ≤ 80	Cracking (TE), including the detection of surface irregularities, such as damaged or fractured material in the retaining ring flanged region, or missing material (Note 5)	None	Visual (VT-3) examination during the next 10-year ISI interval. (Note 7) Subsequent examination during each 10-year ISI interval.	100% of accessible surfaces. (limited accessibility) See Figure 4-10.
B4. Vent Valve Assembly Original locking devices (pressure plates, spring retainers, springs, U-covers)	All plants with original vent valve locking devices 40 < years ≤ 80	Loss of material from locking device (wear associated with jackscrew spring and pressure plate)	None	Visual (VT-3) examination during the next 10-year ISI interval. (Note 7) Subsequent examination during each 10-year ISI interval.	100% of accessible surfaces, including the overall valve symmetry in the mounting ring and the overall jackscrew thread extension from the lower retaining ring threaded flange. See Figure 4-10.

Table 4-1 (continued)
B&W plants Primary components

Primary Item	Applicability (Note 1)	Effect (Mechanism)	Expansion Link (Note 2)	Examination Method/Frequency (Notes 2, 3, 4)	Examination Coverage
B5. Vent Valve Assembly Original locking devices (key rings, pins)	All plants with original vent valve locking devices 40 < years ≤ 80	Cracking (TE), including the detection of reportable indications (Note 5)	None	Visual (VT-3) examination during the next 10-year ISI interval. (Note 7) Subsequent examination during each 10-year ISI interval.	100% of accessible surfaces, including the overall valve symmetry in the mounting ring and the overall jackscrew thread extension from the lower retaining ring threaded flange. See Figure 4-10.
B6. Vent Valve Assembly Modified locking devices (bolt crimped locking cups, jackscrew crimped locking cups, bolted blocks)	All plants with modified vent valve locking devices 40 < years ≤ 80	Cracking (SCC), including detection of fractured or missing locking cups and welds, or the bolted block	None	Visual (VT-3) examination during the next 10-year ISI interval. (Note 7) Subsequent examination during each 10-year ISI interval.	100% of accessible surfaces, including the overall valve symmetry in the mounting ring and the overall jackscrew thread extension from the lower retaining ring threaded flange. See Figure 4-10.
B7. Core Support Shield Assembly Upper core barrel (UCB) bolts	All plants 40 < years ≤ 60	Bolts: cracking (SCC—all bolts, fatigue—original bolts only)	B7.1. UTS bolts and B8.1. LTS bolts or studs and nuts (Note 10) B7.2. SSHT bolts (DB)	Bolts: Volumetric (UT) examination during the next 10-year ISI interval. Subsequent examination during each 10-year ISI interval unless an evaluation of the baseline results, submitted for NRC staff approval, justifies a longer interval between examinations.	100% of accessible bolts. (Note 8) See Figure 4-7.
B7. Core Support Shield Assembly Upper core barrel (UCB) bolts	All plants 60 < years ≤ 80	Bolts: cracking (SCC, ISR/IC/fatigue/wear) (Note 9)	B7.1. UTS bolts and B8.1. LTS bolts or studs and nuts (Note 10)	Bolts: Volumetric (UT) examination during the next 10-year ISI interval. Subsequent examination during each 10-year ISI interval unless an evaluation of the baseline results, submitted for NRC staff approval, justifies a longer interval between examinations.	100% of accessible bolts (Note 8) See Figure 4-7.

Table 4-1 (continued)
B&W plants Primary components

Primary Item	Applicability (Note 1)	Effect (Mechanism)	Expansion Link (Note 2)	Examination Method/Frequency (Notes 2, 3, 4)	Examination Coverage
B8. Core Barrel Assembly Lower core barrel (LCB) bolts	All plants 40 < years ≤ 60	Bolts: cracking (SCC, ISR/IC/fatigue/ wear) (Note 9)	B7.1. UTS bolts and B8.1. LTS bolts or studs and nuts (Note 10) B7.2. SSHT bolts (DB only)	Bolts: Volumetric (UT) examination during the next 10-year ISI interval. Subsequent examination during each 10-year ISI interval unless an evaluation of the baseline results, submitted for NRC staff approval, justifies a longer interval between examinations.	100% of accessible bolts. (Note 8) See Figure 4-8(a) and (b).
B8. Core Barrel Assembly Lower core barrel (LCB) bolts	All plants 60 < years ≤ 80	Bolts: cracking (SCC, ISR/IC/fatigue/ wear) (Notes 9,11)	B7.1. UTS bolts and B8.1. LTS bolts or studs and nuts (Note 10)	Bolts: Volumetric (UT) examination during the next 10-year ISI interval. Subsequent examination during each 10-year ISI interval unless an evaluation of the baseline results, submitted for NRC staff approval, justifies a longer interval between examinations.	100% of accessible bolts. (Note 8) See Figure 4-8(a) and (b).
B9. Core Barrel Assembly Baffle-to-former bolts	All plants 40 < years ≤ 60	Cracking (IASCC, IE, ISR/IC/fatigue/ wear, overload) (Notes 5, 9)	B9.1. Baffle-to-baffle bolts B9.2. Core barrel-to-former bolts	Volumetric (UT) examination during the next 10-year ISI interval. Subsequent examination during each 10-year ISI interval. (Note 12)	100% of accessible bolts. (Note 8) See Figure 4-2.
B9. Core Barrel Assembly Baffle-to-former bolts	All plants 60 < years ≤ 80	Cracking (IASCC, IE, ISR/IC/fatigue/ wear, VS, overload) (Notes 5, 9)	B9.1. Baffle-to-baffle bolts B9.2. Core barrel-to-former bolts (Note 13)	Volumetric (UT) examination during the next 10-year ISI interval. Subsequent examination during each 10-year ISI interval. (Note 12)	100% of accessible bolts. (Note 8) See Figure 4-2.

Table 4-1 (continued)
B&W plants Primary components

Primary Item	Applicability (Note 1)	Effect (Mechanism)	Expansion Link (Note 2)	Examination Method/Frequency (Notes 2, 3, 4)	Examination Coverage
B10. Core Barrel Assembly Baffle plates	All plants 40 < years ≤ 60	Cracking (IE), including the detection of readily detectable cracking (Note 5)	B10.3. Lower grid rib section	Visual (VT-3) examination during the next 10-year ISI interval. Subsequent examination during each 10-year ISI interval.	100% of the accessible surfaces within 1 in. (2.54 cm) around each flow/slot and bolt hole. See Figure 4-2.
B10. Core Barrel Assembly Baffle plates	All plants 60 < years ≤ 80	Cracking (IE, VS), including the detection of readily detectable cracking (Note 5)	B10.2. Former plates	Visual (VT-3) examination during the next 10-year ISI interval. Subsequent examination during each 10-year ISI interval.	100% of the accessible surfaces within 1 in. (2.54 cm) around each flow/slot and bolt hole. See Figure 4-2.
B11. Core Barrel Assembly Locking devices, including locking welds, for the baffle-to-former bolts and internal baffle-to-baffle bolts	All plants 40 < years ≤ 80	Locking devices: cracking (IASCC, IE), including the detection of missing, nonfunctional, or removed locking devices (Notes 5, 14) Locking welds: cracking (IE), including the detection of missing, nonfunctional, or removed locking device welds (Note 5)	B11.1. Locking devices, including locking welds, for the external baffle-to-baffle bolts and core barrel-to-former bolts (Note 14)	Visual (VT-3) examination during the next 10-year ISI interval. Subsequent examination during each 10-year ISI interval.	100% of accessible baffle-to-former and internal baffle-to-baffle bolt locking devices and locking welds. (Note 8) See Figure 4-2.

Table 4-1 (continued)
B&W plants Primary components

Primary Item	Applicability (Note 1)	Effect (Mechanism)	Expansion Link (Note 2)	Examination Method/Frequency (Notes 2, 3, 4)	Examination Coverage
B19. Core Barrel Assembly Surveillance specimen holder tube (SSHT) bolts and their locking devices	DB 60 < years ≤ 80	Bolts: cracking (IASCC, IE, ISR/IC/ fatigue/wear) (Notes 5, 9, 15) Locking devices: cracking (IE), including the detection of missing, nonfunctional, or removed locking devices (Notes 5, 15)	None	Bolts: volumetric (UT) examination no later than two refueling outages from the beginning of the subsequent license renewal period. Locking devices: visual (VT-3) examination no later than two refueling outages from the beginning of the subsequent license renewal period. Subsequent examination during each 10-year ISI interval unless an evaluation of the baseline results, submitted for NRC staff approval, justifies a longer interval between examinations.	100% of accessible bolts and their locking devices. (Note 8) See Figure 4-8(c).
B16. Core Barrel Assembly Core barrel cylinder top flange circumferential weld HAZ	Note 16 40 < years ≤ 80	Cracking (SCC, IE), including the detection of surface-breaking cracklike indications and/or readily detectable cracking (Note 5)	None	Enhanced visual (EVT-1), volumetric (UT), or eddy current (ECT) examination during the current 10-year ISI interval. Subsequent examination during each 10-year ISI interval. Alternatively, in lieu of examination, this item can be addressed by evaluation that is submitted for NRC staff approval.	100% of the accessible OD surfaces of 0.75 in. (1.91 cm) of the adjacent base metal to the core barrel cylinder top flange weld. (Notes 17, 18) See Figure 4-11.

Table 4-1 (continued)
B&W plants Primary components

Primary Item	Applicability (Note 1)	Effect (Mechanism)	Expansion Link (Note 2)	Examination Method/Frequency (Notes 2, 3, 4)	Examination Coverage
B17. Core Barrel Assembly Core barrel top and bottom cylinders center circumferential weld regions	Note 19 60 < years ≤ 80	Cracking (IASCC, IE), including the detection of surface-breaking cracklike indications and/or readily detectable cracking (Note 5)	None	Enhanced visual (EVT-1), volumetric (UT), or eddy current (ECT) examination no later than two refueling outages from the beginning of the subsequent license renewal period. Subsequent examination during each 10-year ISI interval. Alternatively, in lieu of examination, this item can be addressed by evaluation that is submitted for NRC staff approval.	100% of the accessible weld length of the OD of the center circumferential weld and 0.75 in. (1.91 cm) of the adjacent base metal. (Notes 17,18) See Figure 4-11.
B20. Core Barrel Assembly Core barrel cylinder top flange circumferential weld regions	All plants 60 < years ≤ 80 (Note 20)	Cracking (fatigue), including the detection of linear indications	B20.1. Plenum cover weldment ribs to each other welds B20.2. Core support shield cylinder top flange	Enhanced visual (EVT-1), volumetric (UT), or eddy current (ECT) examination no later than two refueling outages from the beginning of the subsequent license renewal period. Subsequent examination during each 10-year ISI interval. Alternatively, in lieu of examination, this item can be addressed by evaluation that is submitted for NRC staff approval.	100% of the accessible weld length of one side of the top flange circumferential weld and 0.75 in. (1.91 cm) of the adjacent base metal. (Notes 17,18) See Figure 4-11.

Table 4-1 (continued)
B&W plants Primary components

Primary Item	Applicability (Note 1)	Effect (Mechanism)	Expansion Link (Note 2)	Examination Method/Frequency (Notes 2, 3, 4)	Examination Coverage
B12. Flow Distributor Assembly Flow distributor (FD) bolts	All plants 40 < years ≤ 60	Bolts: cracking (SCC,fatigue)	B7.1. UTS bolts and B8.1. LTS bolts or studs and nuts (Note 10) B7.2. SSHT bolts (DB)	Bolts: volumetric (UT) examination during the next 10-year ISI interval. Subsequent examination during each 10-year ISI interval unless an evaluation of the baseline results, submitted for NRC staff approval, justifies a longer interval between examinations.	100% of accessible bolts. (Note 8) See Figure 4-8(b).
B12. Flow Distributor Assembly Flow distributor (FD) bolts	All plants 60 < years ≤ 80	Bolts: cracking (SCC, fatigue)	B7.1. UTS bolts and B8.1. LTS bolts or studs and nuts (Note 10)	Bolts: volumetric (UT) examination during the next 10-year ISI interval. Subsequent examination during each 10-year ISI interval unless an evaluation of the baseline results, submitted for NRC staff approval, justifies a longer interval between examinations.	100% of accessible bolts. (Note 8) See Figure 4-8(b).
B13. Lower Grid Assembly Alloy X-750 dowel-to-guide block weld	All plants (except DB) 40 < years ≤ 80	Cracking (SCC), including the detection of separated or missing locking welds, or missing dowels	Alloy X-750 dowels-to- B13.1. upper and B13.2. lower grid fuel assembly support pad welds	Visual (VT-3) examination during the next 10-year ISI interval. Subsequent examination during each 10-year ISI interval.	Accessible surfaces of 100% of the dowel-to-guide block welds. See Figure 4-4.
B21. Lower Grid Assembly Alloy X-750 dowels-to-lower grid fuel assembly support pads	DB 40 < years ≤ 80	Cracking (SCC), including the detection of separated or missing locking welds, or missing dowels	B13.1. Alloy X-750 dowels-to-upper grid fuel assembly support pad welds	Visual (VT-3) examination during the next 10-year ISI interval. Subsequent examination during each 10-year ISI interval.	Accessible surfaces of 100% of the support pad dowel locking welds. See Figure 4-6.

Table 4-1 (continued)
B&W plants Primary components

Primary Item	Applicability (Note 1)	Effect (Mechanism)	Expansion Link (Note 2)	Examination Method/Frequency (Notes 2, 3, 4)	Examination Coverage
B18. Lower Grid Assembly Lower grid rib section	All plants 60 < years ≤ 80	Cracking (IE), including the detection of readily detectable cracking (Note 5)	None	Visual (VT-3) examination no later than two refueling outages from the beginning of the subsequent license renewal period. Subsequent examination during each 10-year ISI interval.	100% of accessible surfaces of 0.25 in. (0.64 cm) of the adjacent base metal of the lower grid rib section to the spider-to-lower grid rib section welds. (Note 17) See Figure 4-3 and Figure 4-6.
B15. In-Core Monitoring Instrumentation (IMI) Guide Tube Assembly a. IMI guide tube spiders b. IMI guide tube spider-to-lower grid rib section welds	All plants 40 < years ≤ 60	Spiders: cracking (IE), including the detection of fractured or missing spider arms (Notes 5,21) Spider welds: cracking (IE), including separation of spider arms from the lower grid rib section at the weld (Note 5)	B15.1. Lower grid fuel assembly support pad items: pad, pad-to-rib section welds, Alloy X-750 dowels, cap screw, and their locking welds (Note: the pad, dowels, and cap screw are included because of IE of the welds)	Visual (VT-3) examination during the next 10-year ISI interval. Subsequent examination during each 10-year ISI interval.	Spiders: 100% of the accessible top surfaces and 100% of the accessible spider surfaces 0.25 in. (0.64 cm) adjacent to the spider casting welds. (Note 17) Spider welds: 100% of the accessible welds to the adjacent lower grid rib section. See Figures 4-3 and 4-6.

Table 4-1 (continued)
B&W plants Primary components

Primary Item	Applicability (Note 1)	Effect (Mechanism)	Expansion Link (Note 2)	Examination Method/Frequency (Notes 2, 3, 4)	Examination Coverage
B15. In-Core Monitoring Instrumentation (IMI) Guide Tube Assembly a. IMI guide tube spiders b. IMI guide tube spider-to-lower grid rib section welds	All plants 60 < years ≤ 80	Spiders: cracking (IE), including the detection of fractured or missing spider arms (Notes 5,21) Spider welds: cracking (IE), including separation of spider arms from the lower grid rib section at the weld (Note 5)	B15.1. Lower grid fuel assembly support pad items: pad, pad-to-rib section welds, Alloy X-750 dowels, cap screw, and their locking welds B15.2. Upper grid fuel assembly support pad items: pad, Alloy X-750 dowels, cap screw, and their locking welds (Secondary expansion of B15.1. Lower grid fuel assembly support pad items)	Visual (VT-3) examination during the next 10-year ISI interval. Subsequent examination during each 10-year ISI interval.	Spiders: 100% of the accessible top surfaces and 100% of the accessible spider surfaces 0.25 in. (0.64 cm) adjacent to the spider casting welds. (Note 17) Spider welds: 100% of the accessible welds to the adjacent lower grid rib section. See Figures 4-3 and 4-6.

Notes:

1. Applicability in this column is both for plant and renewed licensing period, as noted.
2. Examination acceptance criteria and expansion criteria for the B&W component items and welds are detailed in Table 5-1.
3. Initial examinations may be scheduled concurrently with the next 10-year ISI but shall be performed no later than the final outage of the current 10-year ISI interval at the time of entry into the period of extended operation (first or second period of extended operation), except where otherwise noted.
4. The term "10-year ISI interval" is intended to mean the plant's existing schedule associated with removal of the core barrel assembly—that is, during the next scheduled 10-year ISI interval examination. As defined in the ASME B&PV Code Section XI, the first inspection interval is defined as 10 years following the initial start of a plant's commercial startup, and successive inspection intervals are defined as 10 years following the previous inspection interval. Each inspection interval may be extended by as much as 1 year and may be reduced without restriction, provided the examinations required for the interval have been completed. Successive intervals shall not extend more than 1 year beyond the original pattern of 10-year intervals and shall not exceed 11 years in length.
5. Loss of ductility and fracture toughness, which are induced by thermal aging or neutron irradiation embrittlement, are not directly monitored. These effects are indirectly managed by performing periodic visual examinations capable of detecting cracking in the component. D
6. At one of the CRGT locations at ANO-1, a device was installed to monitor water level that required removal of the center control rod drive mechanism and installation of an assembly that blocks access to all the CRGT spacer castings except the top spacer casting. Therefore, for all plants except ANO-1, 100% of the CRGT spacer castings refers to 690 CRGT spacer castings. There is no requirement to examine this set of CRGT spacer castings at this one CRGT assembly at ANO-1, and 100% is defined as 680 CRGT spacer castings for ANO-1.

7. In addition to the Primary vent valve assembly visual (VT-3) examinations identified in this table, the following testing and inspection requirements are currently performed and will continue to be performed by the B&W plants:

   A verification of the operation of each vent valve shall also be performed through manual actuation of the valve. Verify that the valves are not stuck in the open position and that no abnormal degradation has occurred. Examine the valves for evidence of leakage between the valve disc and the valve body (that is, flow lines across the sealing surface), cracking of lock welds and locking cups, jackscrews for proper position, and wear. The frequency is defined in each plant's technical specifications or in their pump and valve in-service test programs (see BAW-2248A [25], page 4.3 and Table 4-1.

8. A minimum of 75% of the total population (examined + unexamined), including coverage consistent with the Expansion criteria in Section 5.3 of this document, must be examined for inspection credit.
9. The primary age-related degradation mechanisms for loss of joint tightness for this item are ISR/IC. Fatigue and wear, which can also lead to cracking, are secondary age-related degradation mechanisms after significant stress relaxation and loss of preload has occurred due to ISR/IC. Bolt stress relaxation cannot readily be inspected by NDE. Only bolt cracking is inspected by volumetric (UT) examination.
10. The Primary–Expansion relationship between the UCB, LCB, and FD bolts and the UTS and LTS bolts/studs is for SCC only.
11. The compression collars for the replacement LCB bolts (DB) are also considered Primary for susceptibility to ISR/IC/fatigue/wear. Ultrasonic examination of the bolt is presumed sufficient to detect the effect of these age-related degradation mechanisms from the compression collar on the applicable bolts.
12. This assumes that all plants operating as of December 2011 have performed baseline (initial) volumetric (UT) examinations no later than two refueling outages from the beginning of their first license renewal period.
13. Only the BB bolts are Expansion for VS. The CB bolts are Category A for VS.
14. The age-related degradation mechanism of IASCC is only applicable to the Primary baffle-to-former bolt and internal baffle-to-baffle bolt locking devices and Expansion external baffle-to-baffle bolt locking devices. The age-related degradation mechanism of IASCC is Category A for the core barrel-to-former bolt locking devices and all locking welds.
15. The compression collars and washers for the replacement SSHT bolts (DB) are also considered Primary for susceptibility to ISR/IC/fatigue/wear. Ultrasonic examination of the bolt is presumed sufficient to detect the effect of these age-related degradation mechanisms from the compression collar and washer on the applicable bolts.
16. Applicable to plants that have had weld repairs performed in their top flange circumferential weld after the stress relief treatment.
17. When "adjacent" base metal is specified in the inspection coverage requirement, it is intended to include the base metal heat-affected zone (HAZ) adjacent to the weld. When "weld region" is specified, it is intended to include the weld and the adjacent base metal. The adjacent base metal to be examined is defined in MRP-228.
18. Examination coverage requires a minimum of 50% of the length of the specified surface of the weld being examined due to potential obstruction of the upper thermal shield restraints at the top of the core barrel cylinder.
19. Applicable to plants that have had weld repairs performed in their center circumferential weld after the stress relief treatment.
20. The following note is contained in Section 3.2, Item H, of MRP-189, Rev. 3 [10] regarding the fatigue ranking analysis used to perform the preliminary categorization with respect to fatigue:

    Note: The PWR internals fatigue ranking analysis performed was specific to ONS-1, ONS-2, and ONS-3 but is considered representative for the B&W design. However, a plant-specific analysis is required to validate applicability to a given non-ONS plant when implementing this revision of MRP-189 or the associated downstream reports

21. Based on review of original fabrication records, the ferrite content of a partial representation of the IMI guide tube spiders is known and less than the screening criteria for TE in Type CF8 castings. It is possible that the remainder of the unknown ferrite contents, based on original fabrication records, may also be less than this screening criterion. In addition, PWROG-15032-NP [40] describes the statistical analysis of a large number of heats of CASS material used in US PWRs in order to determine statistical upper bounds on the ferrite content. The report demonstrates that there is a high probability that all low-molybdenum CASS (Type CF3 or CF8) used in PWR internals in the United States are below the screening criterion for TE of 20% delta ferrite.

Table 4-2
CE plants Primary components (Note 1)

Primary Item	Applicability (Note 11)	Effect (Mechanism)	Expansion Link (Note 2)	Examination Method/Frequency (Note 2)	Examination Coverage
C2. Core Shroud Assembly (Welded) Core shroud plate-former plate weld	Plant designs with core shrouds assembled in two vertical sections	Cracking (IASCC) Aging management (IE)	C2.1. Remaining axial welds	Enhanced visual (EVT-1) examination no later than 2 refueling outages from the beginning of the license renewal period and subsequent examination at a 10-year interval.	Axial and horizontal weld seams at the core shroud re-entrant corners as visible from the core side of the shroud, within 6 in. (15 cm) of central flange and horizontal stiffeners and 0.75 in. (1.91 cm) of adjacent base metal. See Figure 4-15.
C3. Core Shroud Assembly (Welded) Shroud plates	Only plants with welded core shrouds assembled with full-height shroud plates	Cracking (IASCC) Aging management (IE)	C3.1. Remaining axial welds	Enhanced visual (EVT-1) examination no later than 2 refueling outages from the beginning of the license renewal period and subsequent examination at a 10-year interval.	Axial weld seams at the core shroud reentrant corners, at the core mid-plane (± 3 ft [91.4 cm] in height) as visible from the core side of the shroud and 0.75 in. (1.91 cm) of adjacent base metal. See Figure 4-16.
C4a. Core Shroud Assembly (Welded) Assembly	Plant designs with core shrouds assembled in two vertical sections	Distortion (void swelling), as evidenced by measurable separation between the upper and lower core shroud segments Aging management (IE)	None	Visual (VT-1) examination no later than 2 refueling outages from the beginning of the license renewal period. Subsequent examinations at a 10-year interval.	100% of the horizontal seam between the upper and lower core shroud segments. (Note 3) See Figure 4-15.

Table 4-2 (continued)
CE plants Primary components (Note 1)

Primary Item	Applicability (Note 11)	Effect (Mechanism)	Expansion Link (Note 2)	Examination Method/Frequency (Note 2)	Examination Coverage
C5. Core Support Barrel Assembly Upper flange weld (UFW)	All plants	Cracking (SCC)	C5.2. Upper girth weld (UGW) C5.1. Lower girth/flange weld (LGW/LFW) C5.3. Upper axial welds (UAW) C5.4. Lower core support beams C5.5. CSB flexure weld (CSBFW)	Enhanced visual (EVT-1), volumetric (UT), or surface (ET) examination no later than two refueling outages from the beginning of the license renewal period. Subsequent examinations at a 10-year interval. (Note 4)	100% of the accessible weld length of one side of the UFW and 0.75 in. (1.91 cm) of adjacent base metal shall be examined. (Note 5) See Figure 4-17.
C6. Core Support Barrel Assembly Middle girth weld (MGW)	All plants	Cracking (SCC, IASCC) Aging management (IE)	C6.1. Middle axial weld (MAW) C6.2. Lower axial weld (LAW) C6.3. Core support columns C6.4. Fuel alignment plate (SLR only)	Enhanced visual (EVT-1), volumetric (UT), or surface (ET) examination no later than two refueling outages from the beginning of the license renewal period. Subsequent examinations at a 10-year interval. (Note 4)	100% of the accessible weld length of the OD of the MGW and 0.75 in. (1.91 cm) of adjacent base metal shall be examined. (Note 6) See Figure 4-17.
C7. Core Support Barrel Assembly CSB flexure weld (CSBFW)	All plants with welded core shrouds	Cracking (fatigue)	None	If screening for fatigue cannot be satisfied by plant-specific evaluation, perform enhanced visual (EVT-1), volumetric (UT), or surface (ET) examination, no later than two refueling outages from the beginning of the license renewal period. Subsequent examination at a 10-year interval. (Note 4)	Examination coverage to be defined by evaluation to determine the potential location and extent of cracking. See Figure 4-18.

Table 4-2 (continued)
CE plants Primary components (Note 1)

Primary Item	Applicability (Note 11)	Effect (Mechanism)	Expansion Link (Note 2)	Examination Method/Frequency (Note 2)	Examination Coverage
C9. Lower Support Structure Core support plate	All plants with a core support plate	Cracking (fatigue) Aging management (IE)	None	If screening for fatigue cannot be satisfied by plant-specific evaluation, enhanced visual (EVT-1) examination, no later than two refueling outages from the beginning of the license renewal period. Subsequent examination at a 10-year interval.	Examination coverage to be defined by evaluation to determine the potential location and extent of fatigue cracking. See Figure 4-22.
C10. Upper Internals Assembly Fuel alignment plate	Only plants with welded core shrouds assembled with full-height shroud plates	Cracking (fatigue) Aging management (IE)	None	If screening for fatigue cannot be satisfied by plant-specific evaluation, enhanced visual (EVT-1) examination, no later than two refueling outages from the beginning of the license renewal period. Subsequent examination at a 10-year interval.	Examination coverage to be defined by evaluation to determine the potential location and extent of fatigue cracking. See Figure 4-19.
C11. Control Element Assembly Instrument guide tubes and supports	All plants with instrument guide tubes attached to the CEA shroud assemblies	Cracking (SCC, fatigue) that results in missing supports or separation at the welded joint between the tubes and supports	C11.1. Remaining instrument guide tubes and supports within the CEA shroud assemblies	Visual (VT-3) examination, no later than two refueling outages from the beginning of the license renewal period. Subsequent examination at a 10-year interval.	100% of instrument guide tubes in peripheral CEA shroud assemblies (those adjacent to the perimeter of the fuel alignment plate), focusing on the supports and the connecting welds between the supports and the guide tube and CEA shroud. See Figure 4-20.

Table 4-2 (continued)
CE plants Primary components (Note 1)

Primary Item	Applicability (Note 11)	Effect (Mechanism)	Expansion Link (Note 2)	Examination Method/Frequency (Note 2)	Examination Coverage
C12.Lower Support Structure Deep beams	Only plants with welded core shrouds assembled with full-height shroud plates	Cracking (SCC, IASCC, fatigue) that results in a detectable surface-breaking indication in the welds or beams. Aging management (IE)	Remaining deep beams	Enhanced visual (EVT-1) examination, no later than two refueling outages from the beginning of the license renewal period. Subsequent examination at a 10-year interval if adequacy of remaining fatigue life cannot be demonstrated.	Examine 25% of the total number of beam-to-beam welds. Coverage on each weld includes the top 4 in. (10.2 cm) of the weld in the vertical orientation and 0.75 in. (1.91 cm) of adjacent base metal. The inspection coverage must be evenly distributed across the deep beam structure. (Notes 7, 8, and 9) See Figure 4-21.
C18. Core Shroud Assembly (Welded) Core shroud tie rods and nuts	All plants with core shroud tie rods	Loss of material (wear), Aging management (ISR/IC)	None	Nonqualified visual inspection (see Section 4.2.3) no later than two refueling outages from the beginning of the first license renewal period. Subsequent inspections during every refueling outage.	Examination of the top end of 100% of the core shroud tie rods. Top-down and side views of each tie rod must be obtained. See Figure 4-24.
C19. CEA Shroud Assemblies CEA shroud bolts	All plants with CEA shroud bolts	Cracking (IASCC, fatigue) Aging management (IE)	None	If screening for IASCC cannot be satisfied by plant-specific or generic evaluation, volumetric (UT) examination within two refueling outages of subsequent license renewal. The plant-specific or generic analysis must also demonstrate that wear and fatigue are either adequately managed or that the plant falls below screening thresholds. Subsequent examinations are at a 10-year interval.	100% of accessible CEA shroud bolts (Note 10) See Figure 4-25.

Notes:

1. The examination requirements detailed in this table may be replaced or modified by a plant implementing an alternate aging management strategy that addresses the aging degradation mechanisms within these guidelines, supported by a plant-specific technical justification. This may be necessary in cases such as bolt replacements or component modification. See Appendix C for additional details on performing such evaluations.
2. Examination acceptance criteria and expansion criteria for the CE components are in Table 5-2.
3. If evidence of distortion is detected by visual exam, consideration should be given to making supplementary measurements (minimum of 3 to 5, depending on extent of observed condition) of gap opening between the upper and lower core shroud segments.
4. UT or ET examination of core barrel welds must be supported by a technical justification developed per MRP-228 [3].
5. Examination coverage requires a minimum of 75% of the length of either the ID or the OD of the weld being examined.
6. Examination coverage requires a minimum of 75% of the length of OD of the weld being examined.
7. The stated coverage requirement is the minimum if no significant indications are found. However, the Examination Acceptance criteria in Section 5 require that additional coverage must be achieved in the same outage if significant flaws are found. This contingency should be considered for inspection planning purposes.
8. Inspections subsequent to the first 25% sampling inspection must cover weld length that was not inspected during previous examinations. A minimum of 20% out of the 25% inspection coverage of each subsequent inspection must include previously uninspected weld length as possible within the limitation of the remaining accessible un-inspected weld.
9. Justification that adequate distribution of the inspection coverage has been achieved can be based on geometric or layout arguments. For example, because each rectangular axial compartment in the structure has four welds around it, which are shared with the adjacent compartments on two sides, the inspection coverage could consist of the selection of one weld from every second compartment in the structure.
10. A minimum of 75% of the total CEA shroud bolts population (examined + unexamined) must be examined for inspection credit.
11. The entries in this table are applicable to CE-designed plants operating 40 to 80 years.

Table 4-3
Westinghouse plants Primary components (Note 1)

Primary Item	Applicability (Note 12)	Effect (Mechanism)	Expansion Link (Note 2)	Examination Method/Frequency (Note 2)	Examination Coverage
W2. Control Rod Guide Tube Assembly Lower flange welds	All plants	Cracking (SCC, IASCC, fatigue) Aging management (IE and TE)	W2.1. Remaining CRGT assembly lower flange welds W2.2. BMI column bodies	Enhanced visual (EVT-1) examination to determine the presence of cracklike surface flaws in flange welds no later than two refueling outages from the beginning of the license renewal period and subsequent examination at a 10-year interval.	100% of outer (accessible) CRGT lower flange weld surfaces and 0.25 in. (0.64 cm) of the adjacent base metal on the individual periphery CRGT assemblies. (Note 3) See Figure 4-31.
W3. Core Barrel Assembly Upper flange weld (UFW)	All plants	Cracking (SCC)	W3.1. Upper girth weld (UGW) W3.3. Lower flange weld (LFW) W3.2. Upper axial welds (UAW) (secondary expansion of W3.1. UGW or W3.3. LFW) W3.4. Lower support forging or casting (secondary expansion of W3.3. LFW)	Enhanced visual (EVT-1), volumetric (UT), or surface (ET) examination, no later than two refueling outages from the beginning of the license renewal period and subsequent examination at a 10-year interval. (Note 4)	100% of the accessible weld length of one side of the UFW and 0.75 in. (1.91 cm) of adjacent base metal shall be examined. (Note 5) See Figure 4-32.
W4. Core Barrel Assembly Lower girth weld (LGW)	All plants	Cracking (SCC, IASCC) Aging management (IE)	W4.1. Upper core plate W4.4. Lower support column bodies (cast, non-cast) W4.2. Middle axial welds (MAW) W4.3. Lower axial welds (LAW)	Enhanced visual (EVT-1), volumetric (UT), or surface (ET) examination, no later than two refueling outages from the beginning of the license renewal period and subsequent examination at a 10-year interval. (Note 4)	100% of the accessible weld length of the OD of the LGW and 0.75 in. (1.91 cm) of adjacent base metal shall be examined. Accessibility may be limited by the thermal shield or neutron pads, but removal of the thermal shield or neutron pads is not required. (Note 6) See Figure 4-32.

Table 4-3 (continued)
Westinghouse plants Primary components (Note 1)

Primary Item	Applicability (Note 12)	Effect (Mechanism)	Expansion Link (Note 2)	Examination Method/Frequency (Note 2)	Examination Coverage
W5. Baffle-Former Assembly Baffle-edge bolts	All plants with baffle-edge bolts	Cracking (IASCC, fatigue) that results in: • Lost or broken locking devices • Failed or missing bolts • Protrusion of bolt heads Aging management (IE and ISR) (Note 7)	None	Visual (VT-3) examination, with baseline examination no later than 40 effective full power years (EFPY) and subsequent examinations at a 10-year interval.	Bolts and locking devices on high fluence seams. 100% of components accessible from core side. See Figure 4-33.
W6a. Baffle-Former Assembly Baffle-former bolts (Tier 1) (Note 8)	Tier 1 plants (4-loop downflow) [47]	Cracking (IASCC, fatigue) Aging management (IE and ISR) (Note 7)	W6.2. Lower support column bolts W6.1. Barrel-former bolts (secondary expansion of W6.2. Lower support column bolts if large clusters of degraded baffle-former bolts are not detected; see Table 4-6)	Baseline volumetric (UT) examinations have been completed at all these plants. Subsequent examination is dependent on the plant design and the results of the baseline inspection. (Note 9)	100% of accessible bolts. (Note 10) See Figure 4-34.
W6b. Baffle-Former Assembly Baffle-former bolts (Tier 2) (Note 8)	Tier 2 plants (2-loop and 3-loop downflow plants) [47]	Cracking (IASCC, fatigue) Aging management (IE and ISR) (Note 7)	W6.2. Lower support column bolts W6.1. Barrel-former bolts (secondary expansion of W6.2. Lower support column bolts if large clusters of degraded baffle-former bolts are not detected; see Table 4-6)	Baseline volumetric (UT) examination no later than 30 EFPY. Subsequent examination is dependent on the plant design and the results of the baseline inspection. (Note 9)	100% of accessible bolts. (Note 10) See Figure 4-34.
W6c. Baffle-Former Assembly Baffle-former bolts (Tier 3 and 4) (Note 8)	Tier 3 plants (converted upflow plants) (Note 11) Tier 4 plants (design upflow plants) [47]	Cracking (IASCC, fatigue) Aging management (IE and ISR) (Note 7)	W6.2. Lower support column bolts W6.1. Barrel-former bolts (secondary expansion of W6.2. Lower support column bolts if large clusters of degraded baffle-former bolts are not detected; see Table 4-6)	Baseline volumetric (UT) examination no later than 35 EFPY. Subsequent examination is dependent on the plant design and the results of the baseline inspection. (Note 9)	100% of accessible bolts. (Note 10) See Figure 4-34.

Table 4-3 (continued)
Westinghouse plants Primary components (Note 1)

Primary Item	Applicability (Note 12)	Effect (Mechanism)	Expansion Link (Note 2)	Examination Method/Frequency (Note 2)	Examination Coverage
W7. Baffle-Former Assembly Assembly (includes baffle plates, bracket bolts (if applicable), corner bolts (if applicable), and indirect effects of void swelling in former plates)	All plants	Distortion (void swelling), or Cracking (IASCC) that results in: • Abnormal interaction with fuel assemblies • Gaps between plates • Vertical displacement of baffle plates • Broken or damaged bolts	None	Visual (VT-3) examination to check for evidence of distortion, with baseline examination no later than 40 EFPY and subsequent examinations at a 10-year interval.	Core side surface: • High fluence baffle joints • Top and bottom edge of baffle plates • Bolts and locking devices See Figure 4-35.
W8. Alignment and Interfacing Components Internals hold-down spring	All plants with Type 304 stainless steel hold-down springs	Distortion (loss of load due to stress relaxation)	None	Direct measurement of spring height within three cycles of the beginning of (before or after) the license renewal period. If the first set of measurements is not sufficient to assess remaining life to the end of licensed plant life (whether to the end of the first period of extended operation or the end of SLR), additional spring height measurements will be required.	Measurements should be taken at several points around the circumference of the spring, with a statistically adequate number of measurements at each point to minimize uncertainty. See Figure 4-36.
W9. Thermal Shield Assembly Thermal shield flexures	All plants with thermal shields (see WEC TB-19-5 [50])	Cracking (SCC, fatigue) that results in thermal shield flexure fracture, or complete separation	None	Visual (VT-3) no later than two refueling outages from the beginning of the license renewal period. Subsequent examinations at a 10-year interval.	100% of accessible surfaces of 100% of thermal shield flexures. Minimum coverage shall include the top and bottom accessible surfaces of the inner flexure weld (closest to the attachment to the core barrel) and the outer surface of the thermal shield to flexure weld, including the transition radii of this weld. See Figure 4-37.

Notes:

1. The examination requirements detailed in this table may be replaced or modified by a plant implementing an alternate aging management strategy that addresses the aging degradation mechanisms within these guidelines, supported by a plant-specific technical justification. This may be necessary in cases such as bolt replacements or component modification. See Appendix C for additional details on performing such evaluations.
2. Examination acceptance criteria and expansion criteria for the Westinghouse components are in Table 5-3.

3. A minimum of 75% of the total identified sample population must be examined.
4. UT or ET examination of core barrel welds must be supported by a technical justification developed per MRP-228 [3].
5. Examination coverage requires a minimum of 75% of the length of either the ID or the OD of the weld being examined.
6. Examination coverage requires a minimum of 50% of the length of the weld being examined.
7. Void swelling effects on this component are managed through management of void swelling on the entire baffle-former assembly.
8. Baffle-former bolt inspection includes inspection of the corner plate bolts when applicable.
9. Reexamination periods shall be determined by plant-specific evaluation as documented and dispositioned in the owner's plant corrective action program. If evaluation justifies a longer reinspection interval, it is not permitted to exceed 10 years.
10. A minimum of 75% of the total bolt population (examined + unexamined), including coverage consistent with the Expansion criteria in Table 5-3, must be examined for inspection credit.
11. Plants that operated in a downflow configuration for more than 20 calendar years prior to upflow conversion must follow the initial inspection guidance for the applicable downflow Tier: Tier 1 for 4-loop plants or Tier 2 for 2-loop or 3-loop plants.
12. The entries in this table are applicable to Westinghouse-designed plants operating 40 to 80 years.

Table 4-4
B&W plants Expansion components

Expansion Item	Applicability (Note 1)	Effect (Mechanism)	Primary Link (Note 2)	Examination Method/Frequency (Notes 2, 3)	Examination Coverage
Plenum Cover Assembly B20.1. Plenum cover weldment ribs to each other welds	All plants 60 < years ≤ 80 (Note 4)	Cracking (fatigue), including the detection of linear indications	B20. Core barrel cylinder top flange circumferential weld regions	Enhanced visual (EVT-1) examination. Subsequent examination during each 10-year ISI interval unless an applicant/licensee provides an evaluation for NRC staff approval that justifies a longer interval between inspections. Alternatively, in lieu of examination, this item can be addressed by evaluation that is submitted for NRC staff approval.	100% of the exterior plenum cover weldment rib welds accessible from the top of the plenum assembly at or just under the edge of the plenum cover plate. See Figure 4-13.
Core Support Shield Assembly B20.2. Core support shield cylinder top flange	All plants 60 < years ≤ 80 (Note 4)	Cracking (fatigue), including the detection of linear indications	B20. Core barrel cylinder top flange circumferential weld regions	Enhanced visual (EVT-1) examination. Subsequent examination during each 10-year ISI interval unless an applicant/licensee provides an evaluation for NRC staff approval that justifies a longer interval between inspections. Alternatively, in lieu of examination, this item can be addressed by evaluation that is submitted for NRC staff approval.	100% of the accessible OD surface of the core support shield top flange thickness transition; the coverage shall be 2 in. (5 cm) wide on the radius of the transition (see Figure 4-12(a) and (b)). (Note 5) See Figure 4-12 (a) and (b).
Upper Grid Assembly B13.1. Alloy X-750 dowels-to-upper grid fuel assembly support pad welds	All plants 40 < years ≤ 80	Cracking (SCC), including the detection of separated or missing locking weld, or missing dowels	B13. Alloy X-750 dowel-to-guide block weld (except DB) B21. Alloy X-750 dowels-to-lower grid fuel assembly support pad welds (DB only)	Visual (VT-3) examination. Subsequent examination during each 10-year interval unless an applicant/licensee provides an evaluation for NRC staff approval that justifies a longer interval between inspections.	Accessible surfaces of 100% of the support pad dowel locking welds. See Figure 4-14.

Table 4-4 (continued)
B&W plants Expansion components

Expansion Item	Applicability (Note 1)	Effect (Mechanism)	Primary Link (Note 2)	Examination Method/Frequency (Notes 2, 3)	Examination Coverage
Upper Grid Assembly B15.2. Upper grid fuel assembly support pad items: pad, Alloy X-750 dowels, cap screw, and their locking welds	All plants 60 < years ≤ 80	Cracking (IE), including the detection of separated or missing welds, missing support pads, dowels, cap screws and locking welds, or misalignment of the support pads (Note 6)	B15.a. IMI guide tube spiders and B15.b. IMI guide tube spider-to-lower grid rib section welds	Visual (VT-3) examination. Subsequent examination during each 10-year ISI interval unless an applicant/licensee provides an evaluation for NRC staff approval that justifies a longer interval between inspections.	Accessible surfaces of the pad, dowels, cap screw, and associated welds for 100% of the upper grid fuel assembly support pads. See Figure 4-14.
Core Barrel Assembly B7.1. Upper thermal shield (UTS) bolts	All plants 40 < years ≤ 80	Bolts: Cracking (SCC)	B7. UCB, B8. LCB, or B12. FD bolts	Bolts: volumetric (UT) examination. Subsequent examination during each 10-year ISI interval unless an applicant/licensee provides an evaluation for NRC staff approval that justifies a longer interval between inspections.	100% of accessible bolts. (Note 7) See Figure 4-7.
Core Barrel Assembly B10.2. Former plates	All plants 60 < years ≤ 80	Cracking (IE, VS)	B10. Baffle plates	No examination requirements. Justify by evaluation or by replacement.	Inaccessible. See Figure 4-2.
Core Barrel Assembly B9.1. Baffle-to-baffle bolts B9.2. Core barrel-to-former bolts	All plants 40 < years ≤ 60	Cracking (IASCC, IE, ISR/IC/fatigue/wear, overload) (Notes 8,9)	B9. Baffle-to-former bolts	Internal baffle-to-baffle bolts: no examination requirements. Justify by evaluation or by replacement.	An acceptable examination technique currently not available. See Figure 4-2.
				External baffle-to-baffle bolts, core barrel-to-former bolts: No examination requirements. Justify by evaluation or by replacement.	Inaccessible. See Figure 4-2.

Table 4-4 (continued)
B&W plants Expansion components

Expansion Item	Applicability (Note 1)	Effect (Mechanism)	Primary Link (Note 2)	Examination Method/Frequency (Notes 2, 3)	Examination Coverage
Core Barrel Assembly B9.1. Baffle-to-baffle bolts B9.2. Core barrel-to-former bolts	All plants 60 < years ≤ 80	Cracking (IASCC, IE, ISR/IC/fatigue/wear, VS, overload) (Notes 8,10)	B9. Baffle-to-former bolts	Internal baffle-to-baffle bolts: no examination requirements. Justify by evaluation or by replacement.	An acceptable examination technique currently not available. See Figure 4-2.
				External baffle-to-baffle bolts, core barrel-to-former bolts: no examination requirements. Justify by evaluation or by replacement.	Inaccessible. See Figure 4-2.
Core Barrel Assembly B11.1. Locking devices, including locking welds, for the external baffle-to-baffle bolts and core barrel-to-former bolts	All plants 40 < years ≤ 80	Cracking (IASCC, IE) (Note 11)	B11. Locking devices, including locking welds, for the baffle-to-former bolts and internal baffle-to-baffle bolts	No examination requirements. Justify by evaluation or by replacement.	Inaccessible. See Figure 4-2.
Core Barrel Assembly B7.2. Surveillance specimen holder tube (SSHT) bolts	DB 40 < years ≤ 60	Bolts: Cracking (SCC, ISR/IC/fatigue/wear) (Notes 8,12)	B7. UCB, B8. LCB, or B12. FD bolts	Bolts: volumetric (UT) examination. Subsequent examination during each 10-year ISI interval unless an applicant/licensee provides an evaluation for NRC staff approval that justifies a longer interval between inspections.	100% of accessible bolts. (Note 7) See Figure 4-8(c).

Table 4-4 (continued)
B&W plants Expansion components

Expansion Item	Applicability (Note 1)	Effect (Mechanism)	Primary Link (Note 2)	Examination Method/Frequency (Notes 2, 3)	Examination Coverage
Lower Grid Assembly B15.1. Lower grid fuel assembly support pad items: pad, pad-to-rib section welds, Alloy X-750 dowels, cap screw, and their locking welds	All plants 40 < years ≤ 80	Cracking (IE), including the detection of separated or missing welds, missing support pads, dowels, cap screws and locking welds, or misalignment of the support pads (Note 6) (Note: The pad, dowels, and cap screw are included because of IE of the welds (Note 13))	B15.a. IMI guide tube spiders and B15.b. IMI guide tube spider-to-lower grid rib section welds	Visual (VT-3) examination. Subsequent examination during each 10-year interval unless an applicant/licensee provides an evaluation for NRC staff approval that justifies a longer interval between inspections.	Accessible surfaces of the pad, dowels, cap screw, and associated welds for 100% of the lower grid fuel assembly support pads. See Figure 4-6.
Lower Grid Assembly B10.3. Lower grid rib section	All plants 40 < years ≤ 60	Cracking (IE), including the detection of readily detectable cracking (Note 6)	B10. Baffle plates	Visual (VT-3) examination. Subsequent examination during each 10-year interval unless an applicant/licensee provides an evaluation for NRC staff approval that justifies a longer interval between inspections.	100% of accessible surfaces of 0.25 in. (0.64 cm) of the adjacent base metal of the lower grid rib to the spider-to-lower grid rib section welds. (Note 14) See Figures 4-3 and 4-6.
Lower Grid Assembly B13.2. Alloy X-750 dowels-to-lower grid fuel assembly support pad welds	All plants (except DB) 40 < years ≤ 80	Cracking (SCC), including the detection of separated or missing locking welds, or missing dowels	B13. Alloy X-750 dowel-to-guide block weld	Visual (VT-3) examination. Subsequent examination during each 10-year interval unless an applicant/licensee provides an evaluation for NRC staff approval that justifies a longer interval between inspections.	Accessible surfaces of 100% of the support pad dowel locking welds. See Figure 4-6.

Table 4-4 (continued)
B&W plants Expansion components

Expansion Item	Applicability (Note 1)	Effect (Mechanism)	Primary Link (Note 2)	Examination Method/Frequency (Notes 2, 3)	Examination Coverage
Lower Grid Assembly B8.1. Lower thermal shield (LTS) bolts (ANO-1, DB) or studs and nuts (ONS-1, ONS-2, and ONS-3)	All plants 40 < years ≤ 80	Bolts or studs: cracking (SCC) Nuts: cracking (SCC)	B7.UCB, B8. LCB, or B12. FD bolts	Bolts or studs: volumetric (UT) examination. Nuts: visual (VT-3) examination. Subsequent examination during each 10-year interval unless an applicant/licensee provides an evaluation for NRC staff approval that justifies a longer interval between inspections.	100% of accessible bolts or studs and nuts. (Note 7) See Figure 4-8(a) and (b).

Notes:

1. Applicability in this column is both for plant and renewed licensing period, as noted.
2. Examination acceptance criteria and expansion criteria for the B&W component items and welds are in Sections 5.1–5.3 of this document. Degradation exhibited in any of these primary links requires expansion in accordance with the criteria noted in Table 5-1.
3. The term "10-year ISI interval" is intended to mean the plant's existing schedule associated with removal of the core barrel assembly, that is, during the next scheduled 10-year ISI interval examination. As defined in the ASME B&PV Code Section XI, the first inspection interval is defined as 10 years following the initial start of a plant's commercial startup, and successive inspection intervals are defined as 10 years following the previous inspection interval. Each inspection interval may be extended by as much as 1 year and may be reduced without restriction, provided the examinations required for the interval have been completed. Successive intervals shall not extend more than 1 year beyond the original pattern of 10-year intervals and shall not exceed 11 years in length.
4. The following note is contained in Section 3.2, Item H, of MRP-189, Rev. 3 [10] regarding the fatigue ranking analysis used to perform the preliminary categorization with respect to fatigue:

   Note: The PWR internals fatigue ranking analysis performed was specific to ONS-1, ONS-2, and ONS-3 but is considered representative for the B&W design. However, a plant-specific analysis is required to validate applicability to a given non-ONS plant when implementing this revision of MRP-189 [10] or the associated downstream reports.
5. Examination coverage requires a minimum of 75% of the accessible OD surface of the core support shield top flange thickness transition with the radius coverage specified.
6. Loss of ductility and fracture toughness, which are induced by thermal aging or neutron irradiation embrittlement, are not directly monitored. These effects are indirectly managed by performing periodic visual examinations capable of detecting cracking in the component.
7. A minimum of 75% of the total population (examined + unexamined) must be examined for inspection credit.
8. The primary age-related degradation mechanisms for loss of joint tightness for this item are ISR/IC. Fatigue and wear, which can also lead to cracking, are secondary age-related degradation mechanisms after significant stress relaxation and loss of preload has occurred due to ISR/IC. Bolt stress relaxation cannot readily be inspected by NDE. Only bolt cracking could be inspected by volumetric (UT) examination if it were possible for these bolts. Therefore, the effects of loss of joint tightness and/or cracking on the functionality of these bolts relative to the entire core barrel assembly will be addressed by analysis of the core barrel assembly.
9. The age-related degradation mechanism consequence of overload is applicable only to the internal baffle-to-baffle bolts, not the core barrel-to-former bolts and external baffle-to-baffle bolts.
10. The age-related degradation mechanism of VS is applicable only to the baffle-to-baffle bolts, not the core barrel-to-former bolts.

11. The age-related degradation mechanism of IASCC is applicable only to the Primary baffle-to-former bolt and internal baffle-to-baffle bolt locking devices and Expansion external baffle-to-baffle bolt locking devices. The age-related degradation mechanism of IASCC is Category A for the core barrel-to-former bolt locking devices and all locking welds.
12. This table entry for the SSHT bolts also includes the age-related degradation mechanisms of ISR/IC/wear/fatigue for the compression collar and washer of the SSHT bolt.
13. The parenthetic information is only applicable for 40–60 years. For 60–80 years, all component items and welds are considered potentially susceptible to IE so the parenthetical information is not applicable.
14. When adjacent base metal is specified in the inspection coverage requirement, it is intended to include the base metal HAZ adjacent to the weld. When "weld region" is specified, it is intended to include the weld and the adjacent base metal. The adjacent base metal to be examined is defined in MRP-228 [3].

Table 4-5
CE plants Expansion components (Note 1)

Expansion Item	Applicability (Note 9)	Effect (Mechanism)	Primary Link (Note 2)	Examination Method/Frequency (Note 2)	Examination Coverage
Core Support Barrel Assembly C5.1. Lower girth weld (LGW)	All plants	Cracking (SCC)	C5. Upper flange weld (UFW)	Enhanced visual (EVT-1), volumetric (UT), or surface (ET) examination. Reinspection every 10 years following initial inspection. (Note 3)	100% of the accessible weld length of the OD of the LGW and 0.75 in (1.91 cm) of adjacent base metal shall be examined. (Note 4) See Figure 4-17 and Figure 4-18.
Core Support Barrel Assembly C5.2. Upper girth weld (UGW) and C5.3. Upper axial weld (UAW)	All plants	Cracking (SCC) Aging management (IE)	C5. Upper flange weld (UFW)	Enhanced visual (EVT-1), volumetric (UT), or surface (ET) examination. Reinspection every 10 years following initial inspection. (Note 3)	100% of the accessible weld length of one side of the UGW and UAW and 0.75 in. (1.91 cm) adjacent base metal shall be examined. (Note 5) See Figure 4-17.
Lower Support Structure C5.4. Lower core support beams	All plants except those with welded core shrouds assembled with full-height shroud plates	Cracking (SCC, fatigue) including damaged or fractured material	C5. Upper flange weld (UFW)	Enhanced visual (EVT-1) examination. Reinspection every 10 years following initial inspection.	25% of welds and 0.75 in. (1.91 cm) of adjacent base metal or locations as justified by plant-specific evaluation. See Figure 4-22.
Core Support Barrel Assembly C5.5. CSB flexure weld (CSBFW)	All plants with welded core shrouds (full-height and two-section)	Cracking (SCC)	C5. Upper flange weld (UFW)	Enhanced visual (EVT-1), volumetric (UT), or surface (ET) examination. Reinspection every 10 years following initial inspection. (Note 3)	100% of the accessible weld length of the CSBFW and 0.75 in. (1.91 cm) of adjacent base metal shall be examined. (Note 8) See Figure 4-18.
Core Support Barrel Assembly C6.1. Middle axial weld (MAW), C6.2. Lower axial weld (LAW)	All plants	Cracking (SCC, IASCC) Aging management (IE)	C6. Middle girth weld (MGW)	Enhanced visual (EVT-1), volumetric (UT), or surface (ET) examination Reinspection every 10 years following initial inspection. (Note 3)	100% of the accessible weld length of the OD of the MAW and LAW and 0.75 in. (1.91 cm) of adjacent base metal shall be examined. (Note 4) See Figure 4-17.

Table 4-5 (continued)
CE plants Expansion components (Note 1)

Expansion Item	Applicability (Note 9)	Effect (Mechanism)	Primary Link (Note 2)	Examination Method/Frequency (Note 2)	Examination Coverage
Upper Internals Assembly C6.4. Fuel alignment plate (Expansion applicable only after entering SLR period)	All plants with welded core shrouds assembled in two vertical sections	Cracking (SCC, IASCC, fatigue), Aging management (IE)	C6. Middle girth weld (MGW)	Visual (VT-3) examination. Reinspection every 10 years following initial inspection.	Minimum of 25% of core side surfaces. See Figure 4-19.
Core Shroud Assembly (Welded) C2.1. Remaining axial welds	Plant designs with core shrouds assembled in two vertical sections	Cracking (IASCC), Aging management (IE)	C2. Core shroud plate-former plate weld	Enhanced visual (EVT-1) examination. Reinspection every 10 years following initial inspection.	75% of the remaining axial weld length and 0.75 in. (1.91 cm) of adjacent base metal as visible from the core side of the shroud other than that already inspected under the primary link. See Figure 4-15.
Core Shroud Assembly (Welded) C3.1. Remaining axial welds	Only plants with welded core shrouds assembled with full-height shroud plates	Cracking (IASCC), Aging management (IE)	C3. Shroud plates of welded core shroud assemblies	Remaining axial welds: Enhanced visual (EVT-1) examination. Reinspection every 10 years following initial inspection.	Remaining axial welds: 75% of the remaining axial weld length and 0.75 in. (1.91 cm) of adjacent base metal as visible from the core side of the shroud other than that already inspected under the primary link. See Figure 4-23.
Control Element Assembly C11.1. Remaining instrument guide tubes and supports	All plants with instrument guide tubes in the CEA shroud assembly	Cracking (SCC, fatigue) that results in missing supports or separation at the welded joint between the tubes and supports.	C11. Peripheral instrument guide tubes and supports within the CEA shroud assemblies	Visual (VT-3) examination. Reinspection every 10 years following initial inspection.	100% of tubes in CEA shroud assemblies (minimum of 75% of the total population of remaining instrument guide tubes), focusing on the supports and the connecting welds between the supports and the guide tube and CEA shroud. See Figure 4-20.

Table 4-5 (continued)
CE plants Expansion components (Note 1)

Expansion Item	Applicability (Note 9)	Effect (Mechanism)	Primary Link (Note 2)	Examination Method/Frequency (Note 2)	Examination Coverage
Lower Support Structure C6.3. Core support columns	Plant designs with core shrouds assembled in two vertical sections	Cracking (SCC, IASCC, fatigue including damaged or fractured material) Aging management (IE, TE)	C6. Middle girth weld (MGW)	Visual (VT-3) examination. Reinspection every 10 years following initial inspection.	25% of the accessible surfaces of the core support column welds, from the top side of the core support plate. The inspection coverage must be evenly distributed across the population of core support column welds. (Notes 6 and 7) See Figure 4-22.

Notes:

1. The examination requirements detailed in this table may be replaced or modified by a plant implementing an alternate aging management strategy that addresses the aging degradation mechanisms within these guidelines, supported by a plant-specific technical justification. This may be necessary in cases such as bolt replacements or component modification. See Appendix C for additional details on performing such evaluations.
2. Examination acceptance criteria and expansion criteria for the CE components are in Table 5-2.
3. UT or ET examination of core barrel welds must be supported by a technical justification developed per MRP-228 [3].
4. Examination coverage requires a minimum of 75% of the length of OD of the weld being examined.
5. Examination coverage requires a minimum of 75% of the length of either the ID or the OD of the weld being examined.
6. The stated minimum coverage requirement is the minimum if no significant indications are found. However, the Examination Acceptance criteria in Section 5 require that additional coverage must be achieved in the same outage if significant flaws are found. This contingency should be considered for inspection planning purposes.
7. Justification that adequate distribution of the inspection coverage has been achieved can be based on geometric or layout arguments. Possible examples include, but are not limited to, inspection of all column assemblies or accessible core support column welds in one quadrant of the core support plate (based on the azimuthal symmetry of the plate) or inspecting every fourth column or weld across the entire plate.
8. Examination coverage requires a minimum of 75% of the length of the weld being examined.
9. The entries in this table are applicable to CE-designed plants operating 40 to 80 years.

Table 4-6
Westinghouse plants Expansion components (Note 1)

Expansion Item	Applicability (Note 10)	Effect (Mechanism)	Primary Link (Note 2)	Examination Method/Frequency (Note 2)	Examination Coverage
Control Rod Guide Tube Assembly W2.1. Remaining CRGT lower flange welds	All plants	Cracking (SCC, IASCC, fatigue) Aging management (IE and TE)	W2. CRGT lower flange welds	Enhanced visual (EVT-1) examination to determine the presence of crack-like surface flaws in flange welds. Subsequent examination at a 10-year interval.	A minimum of 75% of the CRGT assembly lower flange weld surfaces and 0.25 in. (0.64 cm) of the adjacent base metal for the flange welds at locations with control rods not inspected under the primary link. See Figure 4-31.
Bottom Mounted Instrumentation System W2.2. Bottom-mounted instrumentation (BMI) column bodies and cruciforms	All plants	Cracking (fatigue) including the detection of completely fractured column bodies Aging management (IE and TE)	W2. CRGT lower flange welds	Visual (VT-3) examination. Reinspection every 10 years following initial inspection.	100% of BMI column bodies for which difficulty is detected during flux thimble insertion/withdrawal. See Figure 4-43.
Core Barrel Assembly W3.1. Upper girth weld (UGW)	All plants	Cracking (SCC)	W3. Upper core barrel flange weld (UFW)	Enhanced visual (EVT-1), volumetric (UT), or surface (ET) examination. Reinspection every 10 years following initial inspection. (Note 3)	100% of the accessible weld length of one side of the UGW and 0.75 in. (1.91 cm) of adjacent base metal shall be examined (Notes 4 and 5). See Figure 4-32.
Core Barrel Assembly W3.2. Upper axial weld (UAW)	All plants	Cracking (SCC)	W3. Upper core barrel flange weld (UFW) (secondary expansion of W3.1. UGW or W3.3. LFW)	Enhanced visual (EVT-1), volumetric (UT), or surface (ET) examination. Reinspection every 10 years following initial inspection. (Note 3)	100% of the accessible weld length of one side of the UAW and 0.75 in. (1.91 cm) of adjacent base metal shall be examined (Notes 4 and 5). See Figure 4-32.

Table 4-6 (continued)
Westinghouse plants Expansion components (Note 1)

Expansion Item	Applicability (Note 10)	Effect (Mechanism)	Primary Link (Note 2)	Examination Method/Frequency (Note 2)	Examination Coverage
Core Barrel Assembly W3.3. Lower flange weld (LFW)	All plants	Cracking (SCC)	W3. Upper core barrel flange weld (UFW)	Enhanced visual (EVT-1), volumetric (UT), or surface (ET) examination. Reinspection every 10 years following initial inspection. (Note 3)	100% of the accessible weld length of the OD surface of the LFW and 0.75 in. (1.91 cm) of adjacent base metal shall be examined (Note 5). See Figure 4-32.
Lower Internals Assembly W3.4. Lower support forging or castings	All plants	Cracking (SCC) Aging management (TE in casting) [40]	W3. Upper core barrel flange weld (UFW) (secondary expansion of W3.3. LFW)	Visual (VT-3) examination. Reinspection every 10 years following initial inspection.	Minimum of 25% of bottom (non-core side) surface (Note 6). See Figure 4-39.
Upper Internals Assembly W4.1. Upper core plate	All plants	Cracking (IASCC), Aging management (IE)	W4. Lower girth weld (LGW)	Visual (VT-3) examination. Reinspection every 10 years following initial inspection.	Minimum of 25% of core side surfaces (Note 6). See Figure 4-38.
Core Barrel Assembly W4.2. Middle axial welds (MAW) and W4.3. Lower axial welds (LAW)	All plants	Cracking (SCC, IASCC) Aging management (IE)	W4. Lower girth weld (LGW)	Enhanced visual (EVT-1), volumetric (UT), or surface (ET) examination. Reinspection every 10 years following initial inspection (Note 3)	100% of the accessible weld length of the OD of the MAW and LAW and 0.75 in. (1.91 cm) of adjacent base metal shall be examined. Accessibility may be limited by the thermal shield or neutron pads, but removal of the thermal shield or neutron pads is not required. (Note 5). See Figure 4-32.

Table 4-6 (continued)
Westinghouse plants Expansion components (Note 1)

Expansion Item	Applicability (Note 10)	Effect (Mechanism)	Primary Link (Note 2)	Examination Method/Frequency (Note 2)	Examination Coverage
Lower Support Assembly W4.4. Lower support column bodies (both cast and non-cast)	All plants	Cracking (IASCC) Aging management (IE)	W4. Lower girth weld (LGW)	Visual (VT-3) examination. Reinspection every 10 years following initial inspection.	25% of the total number of column assemblies (both visible and non-visible from above the lower core plate) using a VT-3 examination from above the lower core plate. The inspection coverage must be evenly distributed across the population of column assemblies (Notes 6 and 7). See Figure 4-42.
Core Barrel Assembly W6.1. Barrel-former bolts	All plants	Cracking (IASCC, fatigue) Aging management (IE and ISR)	W6. Baffle-former bolts (secondary expansion of W6.2. lower support column bolts)	Volumetric (UT) examination. Reinspection every 10 years following initial inspection.	100% of accessible barrel-former bolts (minimum of 75% of the total population). Accessibility may be limited by presence of thermal shield or neutron pads. Removal of thermal shield or neutron pads is not required. See Figure 4-40.
			W6. Baffle-former bolts (after large clusters of degraded baffle-former bolts are detected) (Note 8)	One-time visual (VT-3) examination of barrel-former bolts if large clusters of baffle-former bolts with unacceptable indications are observed	Visual (VT-3) examination: barrel-former-bolts adjacent to a large cluster of baffle-former bolts with unacceptable indications (Note 9). Accessibility may be limited by presence of thermal shield or neutron pads. Based on the known accessibility limitations, the accessibility of the barrel-former bolts adjacent to a large cluster of baffle-former bolts with unacceptable indications must be evaluated on a plant-specific case-by-case basis. Removal of thermal shield or neutron pads is not required. See Figure 4-40.

Table 4-6 (continued)
Westinghouse plants Expansion components (Note 1)

Expansion Item	Applicability (Note 10)	Effect (Mechanism)	Primary Link (Note 2)	Examination Method/Frequency (Note 2)	Examination Coverage
Lower Support Assembly W6.2. Lower support column bolts	All plants	Cracking (IASCC, fatigue) Aging management (IE and ISR)	W6. Baffle-former bolts	Volumetric (UT) examination. Reinspection every 10 years following initial inspection.	100% of accessible LSC bolts (minimum of 75% of the total population) or as supported by plant-specific justification. See Figure 4-41.

Notes:

1. The examination requirements detailed in this table may be replaced or modified by a plant implementing an alternate aging management strategy that addresses the aging degradation mechanisms within these guidelines, supported by a plant-specific technical justification. This may be necessary in cases such as bolt replacements or component modification. See Appendix C for additional details on performing such evaluations.
2. Examination acceptance criteria and expansion criteria for the Westinghouse components are in Table 5-3.
3. UT or ET examination of core barrel welds must be supported by a technical justification developed per MRP-228 [3].
4. Examination coverage requires examination of either the ID or the OD of the weld.
5. A minimum coverage of 75% of the weld length on the surface being examined shall be achieved; however, for welds with limited access (such as due to the thermal shield or neutron pads/panels), a minimum examination coverage of 50% of the weld length on the surface being examined shall be achieved.
6. The stated minimum coverage requirement is the minimum if no significant indications are found. However, the Examination Acceptance criteria in Section 5 require that additional coverage must be achieved in the same outage if significant flaws are found. This contingency should be considered for inspection planning purposes.
7. Justification that adequate distribution of the inspection coverage has been achieved can be based on geometric or layout arguments. Possible examples include, but are not limited to, inspection of all column assemblies in one quadrant of the lower core plate (based on the azimuthal symmetry of the plate) or inspecting every fourth column across the entire plate.
8. A large cluster of degraded baffle-former bolts is defined as any group of adjacent baffle-former-bolts at least 3 rows high by at least 10 columns wide, or at least 4 rows high by at least 6 columns wide where 80% or greater of the baffle-former-bolts have unacceptable UT indications or are visibly degraded [48].
9. The barrel-former bolts adjacent to the cluster include the following [48]:
   a. Barrel-former bolts in the same area as the cluster of baffle-former bolts with indications if that area is projected radially onto the core barrel
   b. Barrel-former bolts on the two rows above and the two rows below the projected area
   c. Barrel-former bolts on each of the two columns of bolts that are circumferentially adjacent to the projected area.
10. The entries in this table are applicable to Westinghouse-designed plants operating 40 to 80 years.

4.4 Existing Programs Component Requirements

Component items in the Existing Programs tables are PWR internals for which current aging and/or plant asset management activities are being generically implemented either by adherence to ASME Code Section XI [2] or previous industry recommendations to address degradation during the original 40-year operating period and first license renewal operating period. The continuation of these activities for the specific component items delineated in Table 4-7, Table 4-8, and Table 4-9 is credited within these guidelines as adequate for continued aging management during the extended period of operation. (See Section 4.2.8 regarding coordination of the Code and MRP inspections.) The expectation of these guidelines is that these examinations will be conducted in accordance with the Code as well as the associated standards and practices that are normally invoked in such inspections.

For PWRs, ASME Code Section XI specifies examination of the vessel interior according to Table IWB-2500-1 [2]. There are three subcategories of Examination Category B-N in the tables titled B-N-1, "Interior of Reactor Vessel," B-N-2, "Welded Core Support Structures and Interior Attachments to Reactor Vessels," and B-N-3, "Removable Core Support Structures." Only interior attachments within and outside the beltline (and not welded core support structures) are applicable to PWRs under B-N-2, B13.50, and B13.60, respectively. B-N-3 is applicable only to PWRs under B13.70. B13.70, Note 2 specifies that the core support structure be removed for examination and deferral of the examination to the end of the interval is permissible for all but B-N-1, for which examination is required each examination period.

Because the removal of the core support structures (that is, core barrel/core support assembly/core support barrel) is a major undertaking for plants, it is commonly performed once per 10-year interval in conjunction with ASME Code Section XI volumetric weld examinations required for pressure-retaining welds in the reactor vessel and reactor vessel nozzles. Thus, ASME Code examinations associated with core support structure removal have typically been coordinated into a single plant outage designated the 10-year in-service inspection or "10-year ISI."

Component items associated with the removable core support structure are typically examined during the 10-year ISI under B-N-3, but additional vessel interior items (including nonremovable components with core support function) are also rendered accessible because of the removal of the core support structure and are typically included in the examination scope. Regardless of whether a component item is designated B-N-1 or B-N-3, the requirements of B-N-1 and B-N-3 (visual VT-3) are considered sufficient to monitor for the aging effects addressed by these guidelines. Included in the Existing Programs are PWR internals that are typically examined during the 10-year ISI whether as removable core support structures or internals. ASME Section XI, IWB-2500, Examination Category B-N-2 does not provide component-specific nomenclature associated with the reactor interior examination requirements. Accordingly, factors such as original design, licensing, code of construction, and documentation (clerical) variability

can result in significant differences in how an individual plant's current Category B-N-1/B-N-2/B-N-3 requirements are fulfilled. Regardless of classification, however, the basic inspection requirements and effectiveness are considered equivalent. These guidelines therefore credit examination of specific components contained within the general Category B-N-1/B-N-2/ B-N-3 classification for monitoring age-related degradation.

Also included in Existing Programs are those components for which existing guidance has been issued (for instance, from industry response fleet operating experience) to address degradation experienced during the original operating life of the PWR fleet. The continued implementation of this guidance has been determined to adequately manage the aging effects for these components.

These examination requirements, as applied to the components designated in Table 4-7, Table 4-8, and Table 4-9, have been determined to provide sufficient aging management for these components. Utility owners should submit any deviations related to these inspections to the relevant materials IP responsible for the overarching guidance (for example, EPRI-MRP or PWROG). Multiple deviations are not required. Utility owners that file Relief Requests to ASME B&PV Code Section XI inspection requirements (Existing programs components) should also inform the EPRI-MRP of this relief request filing. The impact to the utility's MRP-227 aging management program shall also be evaluated.

4.4.1 B&W Components

Table 4-7
B&W plants Existing Programs components

There are no Existing Programs components for B&W plants.

No existing generic industry programs were considered sufficiently specific for monitoring the aging effects addressed by these guidelines for B&W plants. Therefore, no components for B&W plants were placed into the Existing Programs group, and there is no Table 4-7.

4.4.2 Components

Table 4-8 lists the Existing examinations that are credited for aging management in the CE-design plants. Many of these items may be considered core support structures that are typically examined during the 10-year ISI per ASME Code Section XI Table IWB-2510 [2]. For these component items, the requirements of the Code (visual VT-3) are considered sufficient to monitor for the aging effects addressed by these guidelines.

ICI thimble tubes were not included in Table 4-2, Table 4-5, or Table 4-8 for previous revisions of the I&E guidelines because they have been addressed through plant-specific programs. These programs included replacements of the thimble tubes with shorter tubes to prevent irradiation-induced growth of the tubes from causing interference with other components. However, operation beyond the current 60-year licenses into the SLR period could

result in growth that affects the function of the ICI thimble tubes. Therefore, the ICI thimble tubes—lower have been added as an Existing Programs component in Table 4-8, referencing the plant-specific program. As part of application for SLR operation, the affected plants should review the ICI thimble tube program and the results of any periodic measurements of tube growth that have been conducted and determine whether further actions will be required during the proposed SLR operation.

4.4.3 Westinghouse Components

Table 4-9 lists the Existing examinations that are credited for aging management in the Westinghouse-design plants. Many of these component items are considered core support structures that are typically examined during the 10-year ISI per ASME Code Section XI Table IWB-2510 [2]. For these component items, the Code requirements for visual VT-3 are considered sufficient to monitor for the aging effects addressed by these guidelines.

The guide plates (cards) (W1) have been moved from the Primary components table to the Existing Programs components table for the current revision of the I&E guidelines. This does not reduce or modify the current industry requirements for the guide plates (cards). Instead, this change is based on the aging management for the guide plates (cards) being fully covered by the existing NEI 03-08 "needed" requirements in WCAP-17451-P [44]. This change reduces duplicate coverage and the potential for revisions of different guidance and requirements to not match. The c-tubes and sheaths have been added to the entry, as WCAP-17451-P also includes aging management requirements for those continuous section components as well.

Within the Westinghouse fleet are three distinct upper support plate assembly designs (deep beam, top hat, and inverted top hat) [12]. In each design, the assembly is composed of a distinct set of components. The original screening process identified SCC at structural welds and fatigue as potential degradation mechanisms. The location of potential degradation is dependent on the design, but generally occurs in the structural plates (for example, flanges, rings, skirts). The top or outer surfaces of these structural plates should be readily available for visual inspection when the upper internals assembly is removed from the core barrel. In all three designs, the assembly is considered part of the core support structure and inspection of the accessible surfaces would be required by the ASME Code. IE is not a concern in the upper support assembly and the VT-3 examination should be sufficient for monitoring for cracking.

A plant-specific Westinghouse-design item that is managed within the plant program is guidance for flux thimble tubes. The bottom mounted instrumentation flux thimble tubes (applicable to all plants) are inspected to ensure pressure boundary integrity, as initially prompted by Bulletin IEB 88-09 [63]. Each operating plant has an existing aging management program for the flux thimble tubes. These programs vary significantly because of differences in operation, replacement of the thimble tubes with different designs, and various commitments. Both NUREG-1801 [5] and NUREG-2191 [6] contain a Section XI.M37, "Flux Thimble Tube Inspection,"

which requires the creation of a plant aging management program for the flux thimble tubes. Because the flux thimble tubes are managed under a separate NUREG-1801 or NUREG-2191 aging management program, the previous line item for W13, "Flux Thimble Tubes," in the Existing Programs components table (Table 4-9) has been deleted to avoid potential issues with attempting to manage the same component through two separate requirements.

The thermal sleeves are a new Existing Programs component added to Table 4-9 for the current revision of the I&E guidelines. This addition is to address recent operating experience for the thermal sleeves. The degradation issues of wear through the upper flange of the thermal sleeves and cracking just below the upper flange of the thermal sleeves are already covered by NEI 03-08 requirements in letters MRP 2018-027 [54] and OG-20-113 [55], respectively.

4.5 No Additional Measures Components

It has been determined that no additional aging management is necessary for components in this group. Certain components designated as not requiring aging management may still be subject to ASME Code Section XI IWB-2500 [2] ISI requirements. In no case does a determination of no inspection for aging management in this guideline relieve utilities of any ASME Code Section XI IWB-2500 ISI requirement unless specific relief is granted as allowed by 10 CFR 50.55a [4].

A plant-specific Westinghouse-designed item that has been managed by modification is the upper internals guide tube support pins (split pins). The degradation of split pins is not a safety issue, but it is an asset management concern. In Westinghouse-designed plants, the originally installed Alloy X-750 split pins have typically been replaced with components with improved designs and less susceptible materials, such as Type 316 stainless steel. Type 316 stainless steel split pins are a Category A component, which is assigned to components for which the aging effects are below the screening criteria or for which aging degradation significance is minimal. Therefore, the Type 316 stainless steel split pins are considered a "no additional measures component" and do not require a plant-specific aging management program. For this reason, the Type 316 stainless steel split pins are not included in Table 4-9.

The plant owner should review the specific design, upgrade status, and asset management plans for guide tube split pins. If the originally installed Alloy X-750 split pins have not been replaced by components with a less susceptible material, a plant-specific evaluation shall be performed to determine an appropriate aging management program for the component and shall be included in the plant-specific reactor-vessel internals (RVI) program for the period of extended operation, or until replacement is performed.

Table 4-8
CE plants Existing Programs components

Item	Applicability	Effect (Mechanism)	Reference	Examination Method	Examination Coverage
C13. Core Shroud Assembly Guide lugs	All plants	Loss of material (wear) Aging management (ISR)	ASME Code Section XI	Visual (VT-3) examination, general condition examination for detection of excessive or asymmetrical wear.	Accessible surfaces at specified frequency. See Figure 4-26.
C14. Upper Internals Assembly Guide lug inserts and bolts	All plants	Loss of material (wear) Aging management (ISR)	ASME Code Section XI	Visual (VT-3) examination, general condition examination for detection of excessive or asymmetrical wear.	Accessible surfaces at specified frequency. See Figure 4-26.
C15a. Lower Support Structure Fuel alignment pins	All plants with core shrouds assembled with full-height shroud plates	Cracking (SCC, IASCC, fatigue) Aging management (IE and ISR)	ASME Code Section XI	Visual (VT-3) examination to detect severed fuel alignment pins, missing locking tabs, or excessive wear on the fuel alignment pin nose or flange.	Accessible surfaces at specified frequency. See Figure 4-27.
C15b. Lower Support Structure Fuel alignment pins	All plants with core shrouds assembled in two vertical sections	Loss of material (wear) Aging management (IE and ISR)	ASME Code Section XI	Visual (VT-3) examination.	Accessible surfaces at specified frequency. See Figure 4-27.
C16. Core Barrel Assembly Upper flange	All plants	Loss of material (wear)	ASME Code Section XI	Visual (VT-3) examination.	Area of the upper flange potentially susceptible to wear. See Figure 4-17.
C17. Alignment and Interfacing Components Core stabilizing lugs and shims Core stabilizing lug shim bolts	All plants (TB-14-5 [56])	Cracking (SCC) of bolting	ASME Code Section XI as supplemented by TB-14-5 and OG-21-160 [56] (Note 1)	Visual (VT-3) examination or UT examination per OG-21-160	Accessible surfaces at specified frequency See Figure 4-28.

Table 4-8 (continued)
CE plants Existing Programs components

Item	Applicability	Effect (Mechanism)	Reference	Examination Method	Examination Coverage
C20. Top-mounted ICI ICI thimble tubes—lower	All plants with top-mounted ICI	Irradiation growth	Plant-specific programs	Set by plant-specific programs but may require updates for SLR operation.	All ICI thimble tubes—lower See Figure 4-29.

Note:
1. The core stabilizing lugs are attached to the reactor vessel and the shims are bolted to the lugs. The ASME Code examination of accessible surfaces is considered to include all details of the shim configuration, including the bolting and bolt lock pins. The bolting is fabricated from nickel-based materials and is susceptible to SCC. Although failure of the bolting does not itself cause loss of support function, asset impairment or issues with core barrel removal are a subsequent possibility. Westinghouse technical bulletin TB 14-5 [56] provides additional information regarding possible visual indications that shim bolting failure may have occurred. This information should be reviewed to ensure that a heightened awareness of the examiners is applied to this Code inspection. See also OG-21-160, dated 9/1/2021, entitled "PWR Owners Group NEI 03-08 Needed Guidance: PWR Lower Radial Support Clevis Insert X-750 Bolt Inspection Requirements."

Table 4-9
Westinghouse plants Existing Programs components

Item	Applicability	Effect (Mechanism)	Reference	Examination Method	Examination Coverage
W1. Control Rod Guide Tube Assembly Guide plates (cards), c-tubes, and sheaths	All plants (see WEC NSAL-17-1 [43])	Loss of material (wear)	WCAP-17451-P	Per the requirements of WCAP-17451-P, including subsequent examinations (Note 1)	Examination coverage per the requirements of WCAP-17451-P [44]. (Note 1) See Figure 4-30.
W10.Core Barrel Assembly Core barrel flange	All plants	Loss of material (wear)	ASME Code Section XI	Visual (VT-3) exam to determine general condition for excessive wear	All accessible surfaces at specified frequency. See Figure 4-32.
W11.Upper Internals Assembly Upper support ring or skirt	All plants	Cracking (SCC, fatigue)	ASME Code Section XI	Visual (VT-3) examination	All accessible surfaces at specified frequency. See Figure 4-44.
W12.Lower Internals Assembly Lower core plate XL lower core plate (Note 2)	All plants	Cracking (IASCC, fatigue) Aging management (IE) Loss of material (wear)	ASME Code Section XI	Visual (VT-3) exam of the lower core plates to detect evidence of distortion and/or loss of bolt integrity	All accessible surfaces at specified frequency. See Figure 4-39.
W14.Alignment and Interfacing Components Clevis bearing Stellite wear surface Clevis insert bolts (Note 3)	All plants (see TB-14-5 [56])	Loss of material (wear) Cracking (SCC)	ASME Code Section XI as supplemented by TB-14-5 [56] and OG-21-160 (Note 3)	Visual (VT-3) or UT examination per OG-21-160	All accessible surfaces at specified frequency. See Figure 4-45.
W15.Alignment and Interfacing Components Upper core plate alignment pins	All plants	Loss of material (wear)	ASME Code Section XI	Visual (VT-3) examination	All accessible surfaces at specified frequency. See Figure 4-46.

Table 4-9 (continued)
Westinghouse plants Existing Programs components

Item	Applicability	Effect (Mechanism)	Reference	Examination Method	Examination Coverage
W16. Upper Internals Assembly Upper fuel alignment pins	All plants with Malcomized fuel alignment pins (see TB-16-4 [59])	Loss of material (wear)	ASME Code Section XI as supplemented by TB-16-4 [59]	Visual (VT-3) examination to determine general condition for excessive wear	All accessible surfaces at specified frequency. See Figure 4-47.
W17. Lower Internals Assembly Lower fuel alignment pins	All plants with Malcomized fuel alignment pins (see TB-16-4 [59])	Loss of material (wear)	ASME Code Section XI as supplemented by TB-16-4 [59]	Visual (VT-3) examination to determine general condition for excessive wear	All accessible surfaces at specified frequency. See Figure 4-47.
W18. Lower Internals Assembly XL Lower fuel alignment pins	All XL design plants	Cracking (IASCC, fatigue), Aging management (IE)	ASME Code Section XI	Visual (VT-3) examination to determine general condition	All accessible surfaces at specified frequency. See Figure 4-47.
W19. Alignment and Interfacing Components Upper core plate inserts	All plants with upper core plate inserts	Loss of material (wear)	ASME Code Section XI	Visual (VT-3) examination	All accessible surfaces at specified frequency. See Figure 4-48.
W20. Radial Support Keys Radial support keys	All plants	Loss of material (wear)	ASME Code Section XI	Visual (VT-3) examination	All accessible surfaces at specified frequency See Figure 4-49.
W21a. Alignment and Interfacing Components Thermal sleeves	All plants with thermal sleeves (see NSAL-18-1 [52])	Loss of material (wear)	MRP 2018-027 [54] IN 2018-10 [53] OG-19-101 [77]	Per the requirements of PWROG-16003-P [76]	All thermal sleeves at locations with control rods See Figure 4-50.

Table 4-9 (continued)
Westinghouse plants Existing Programs components

Item	Applicability	Effect (Mechanism)	Reference	Examination Method	Examination Coverage
W21b. Alignment and Interfacing Components Thermal sleeves	All plants with thermal sleeves with a stepped collar susceptible to cracking per Table 1 of NSAL-20-1 [51]	Cracking (fatigue)	OG-20-113 [55]	Visual (VT-1) examination per OG-20-113 [55]	All thermal sleeves at locations with control rods for plants that meet the criterion of NSAL-20-1 [51]. See Figure 4-50.

Notes:

1. In WCAP-17451-P [44], the baseline examination schedule has been adjusted for various CRGT designs, the extent of individual CRGT examination modified, and flexible subsequent examination regimens correlating to initial baseline sample size, accuracy of wear estimation, and examination results. Initial inspection prior to the license renewal period may be required.
2. XL = "Extra Long" referring to Westinghouse plants with 14-foot cores.
3. The clevis inserts are attached to integrally welded reactor vessel lugs and the inserts are bolted to the lugs. The ASME Code examination of accessible surfaces is considered to include all details of the clevis configuration, including the bolting and locking devices. The bolting is fabricated from nickel-based materials and is susceptible to SCC. Although failure of the bolting does not itself cause loss of support function, asset impairment or issues with core barrel removal are a subsequent possibility. Westinghouse technical bulletin TB 14-5 [55] provides additional information regarding possible visual indications that clevis bolting failure may have occurred. This information should be reviewed to ensure a heightened awareness of the examiners is applied to this Code inspection. See also OG-21-160, dated 9/1/2021, entitled "PWR Owners Group NEI 03-08 Needed Guidance: PWR Lower Radial Support Clevis Insert X-750 Bolt Inspection Requirements."

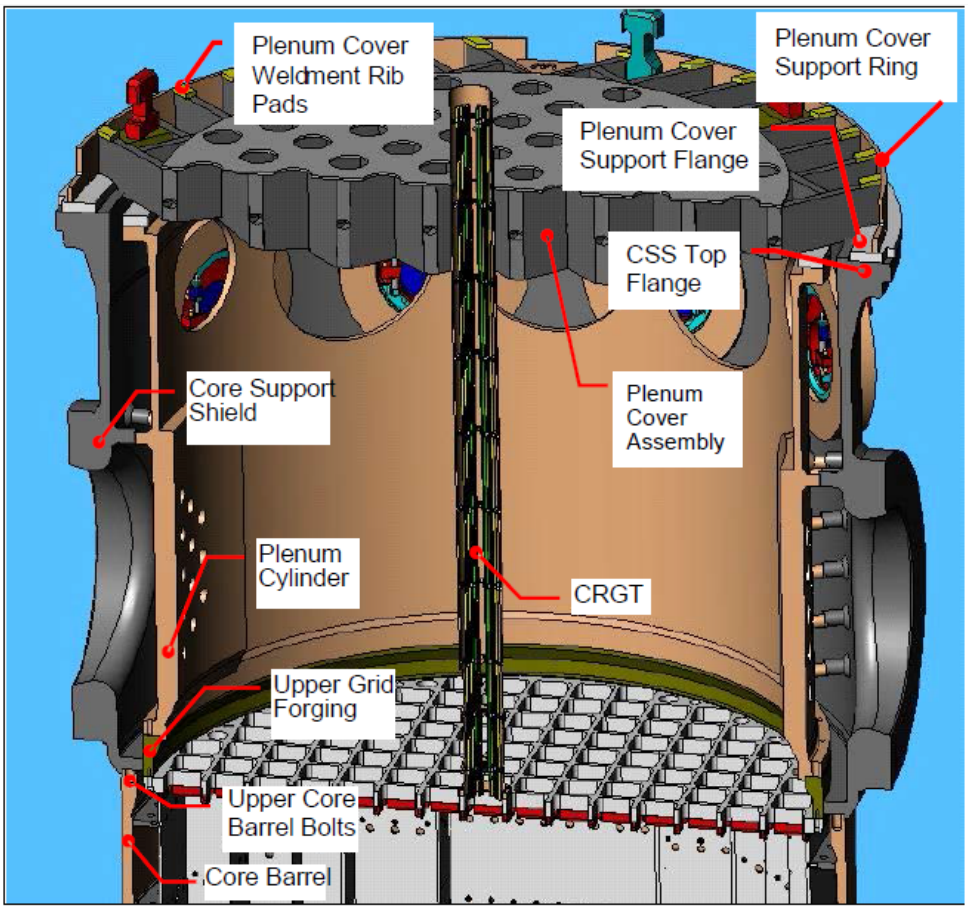

Figure 4-1
Typical upper internals arrangement for B&W-designed PWRs

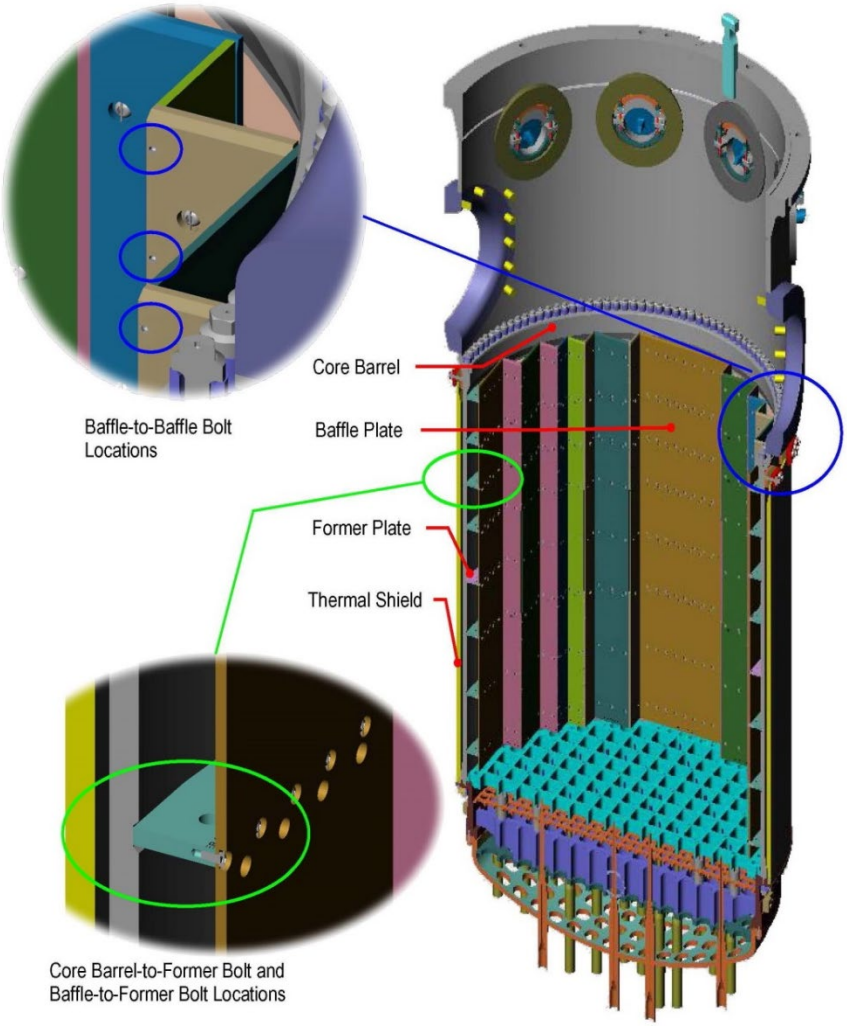

Figure 4-2
Typical internals core barrel arrangement for B&W-designed PWRs

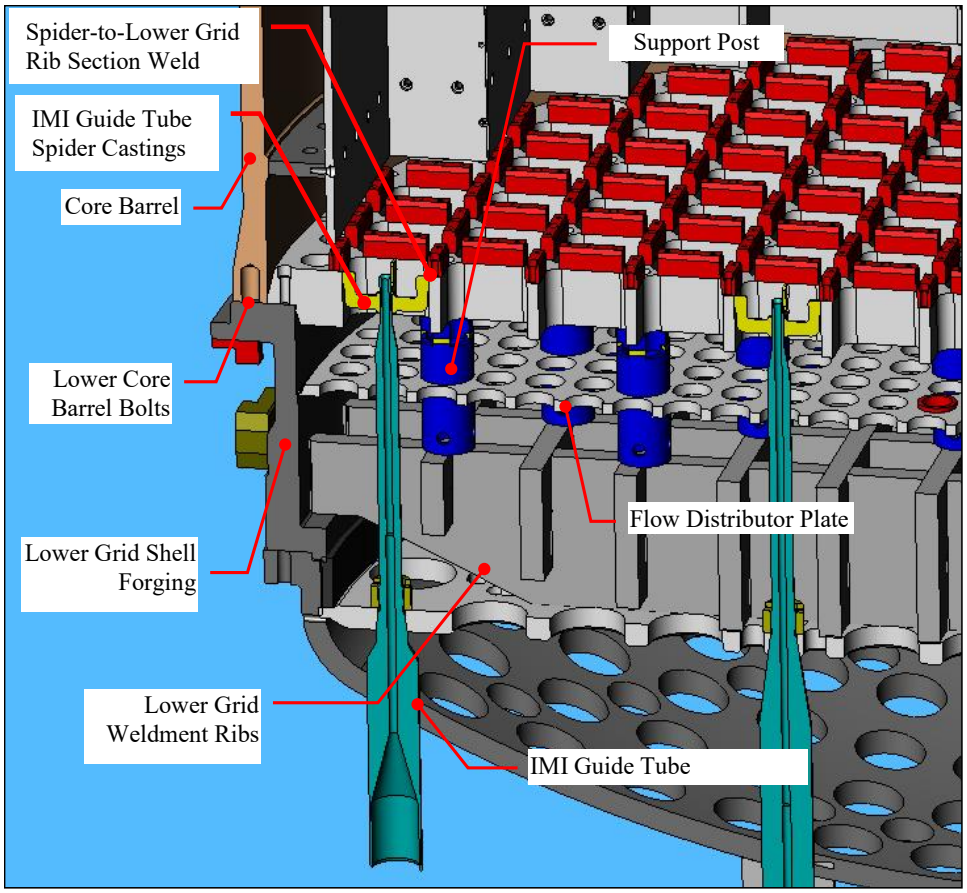

Figure 4-3
Typical lower internals arrangement for B&W-designed PWRs

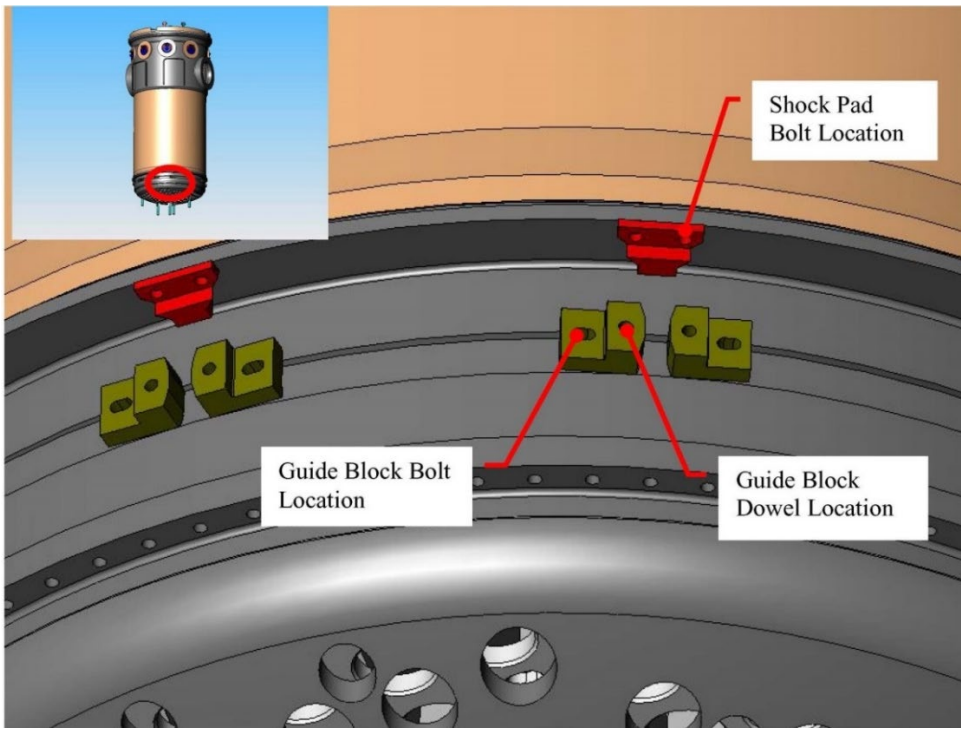

Figure 4-4
Typical guide block and shock pad locations for B&W-designed PWRs (some component items and welds not shown, for clarity)

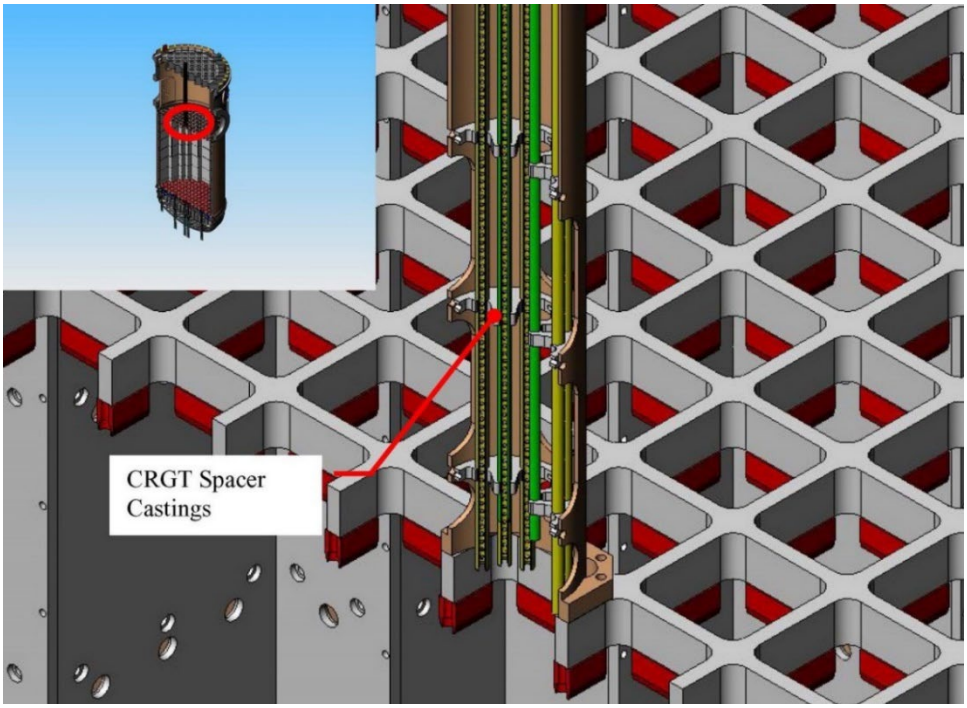

Figure 4-5
Typical control rod guide tube (CRGT) for B&W-designed PWRs (1 of 69 CRGTs shown)

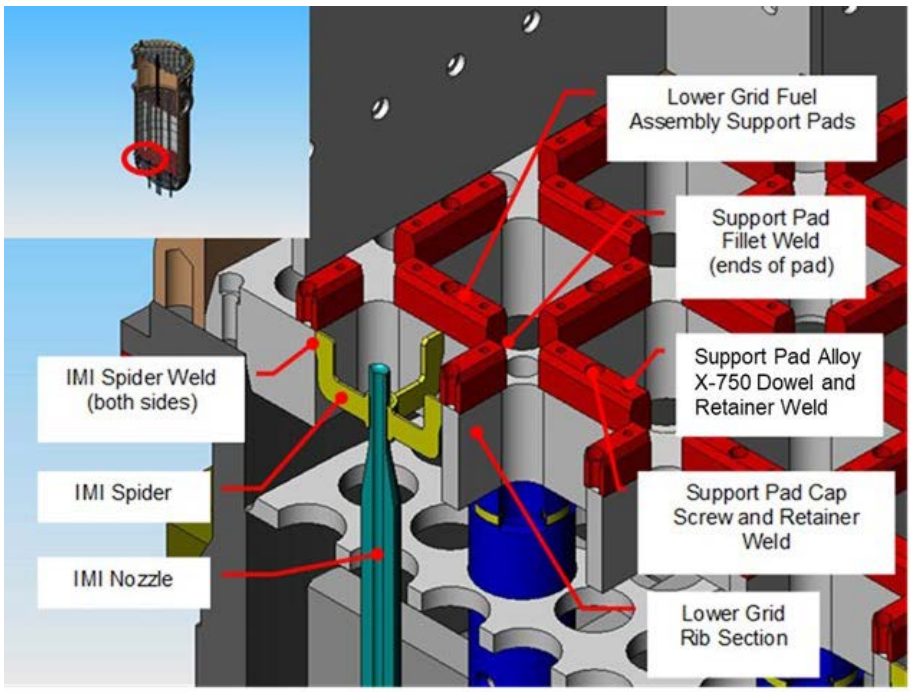

Figure 4-6
Typical lower grid assembly and lower grid fuel assembly support pads for B&W-designed PWRs

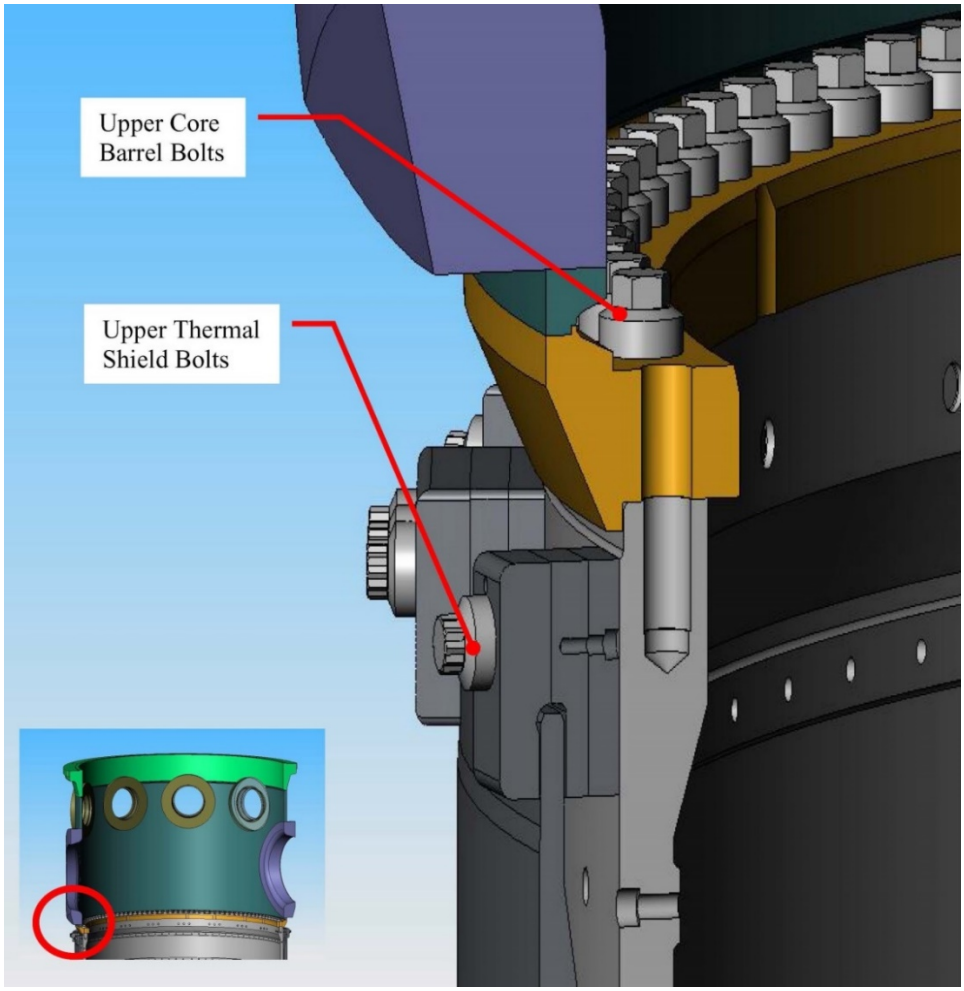

Figure 4-7
Typical upper thermal shield bolts and upper core barrel bolts for B&W-designed PWRs

(a)

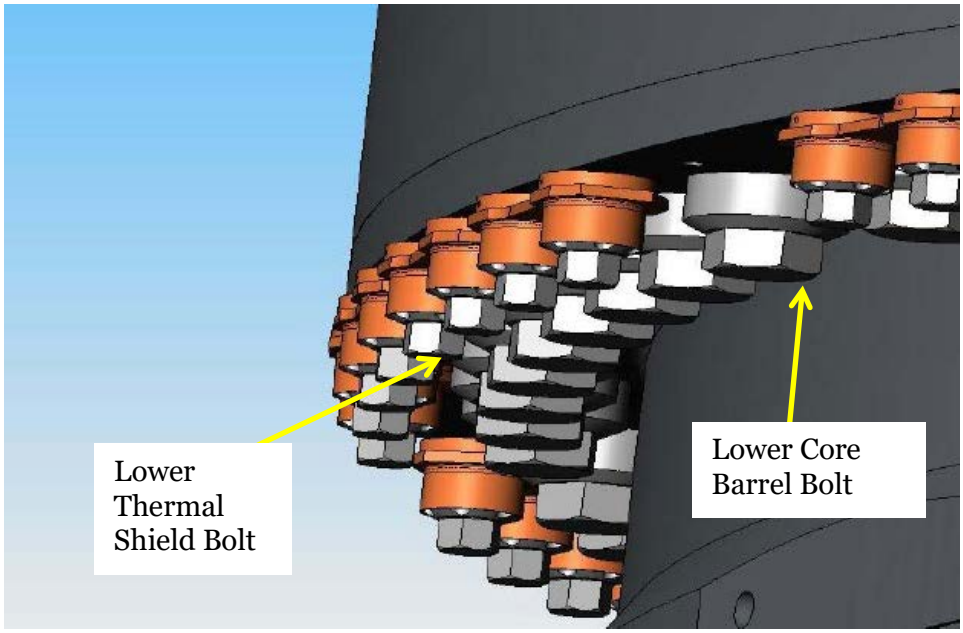

(b)

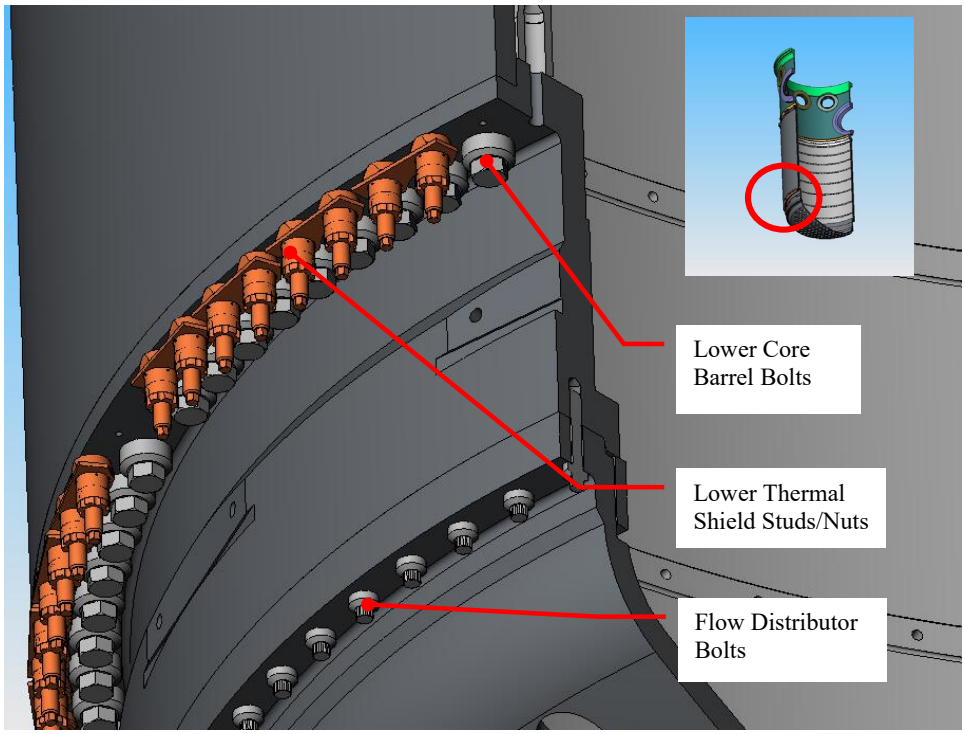

Figure 4-8
Typical (a) lower thermal shield bolts and lower core barrel bolts, (b) lower thermal shield studs/nuts, lower core barrel bolts, flow distributor bolts, and (c) surveillance specimen holder tube bolts for B&W-designed PWRs

(c)

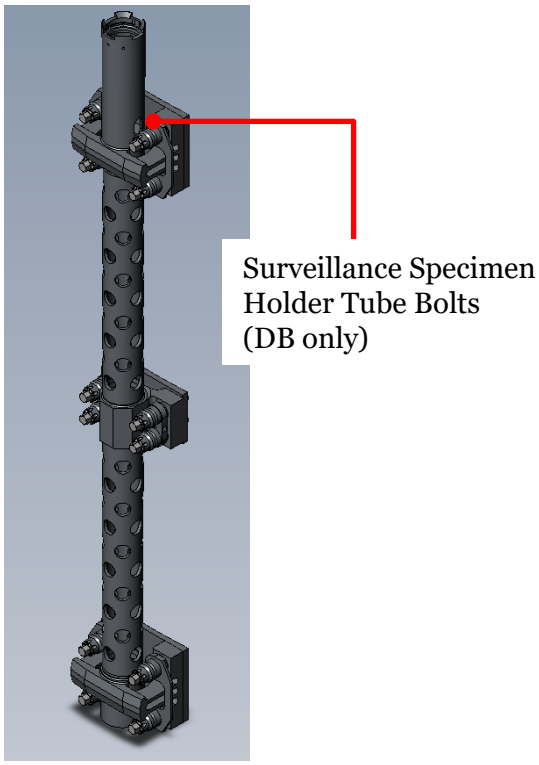

Figure 4-8 (continued)
Typical (a) lower thermal shield bolts and lower core barrel bolts, (b) lower thermal shield studs/nuts, lower core barrel bolts, flow distributor bolts, and (c) surveillance specimen holder tube bolts for B&W-designed PWRs

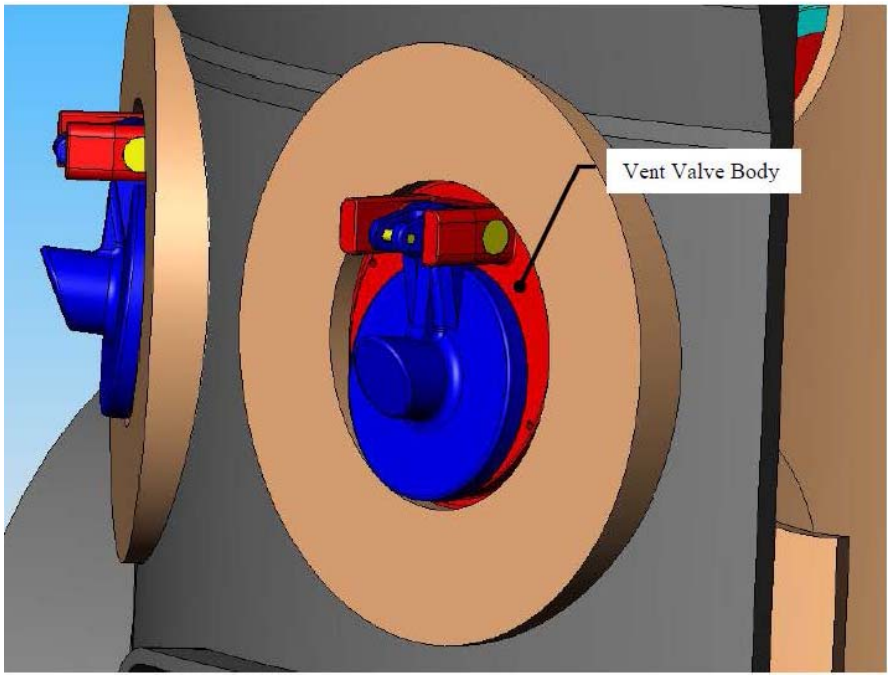

Figure 4-9
Typical vent valve assembly (outside view) for B&W-designed PWRs

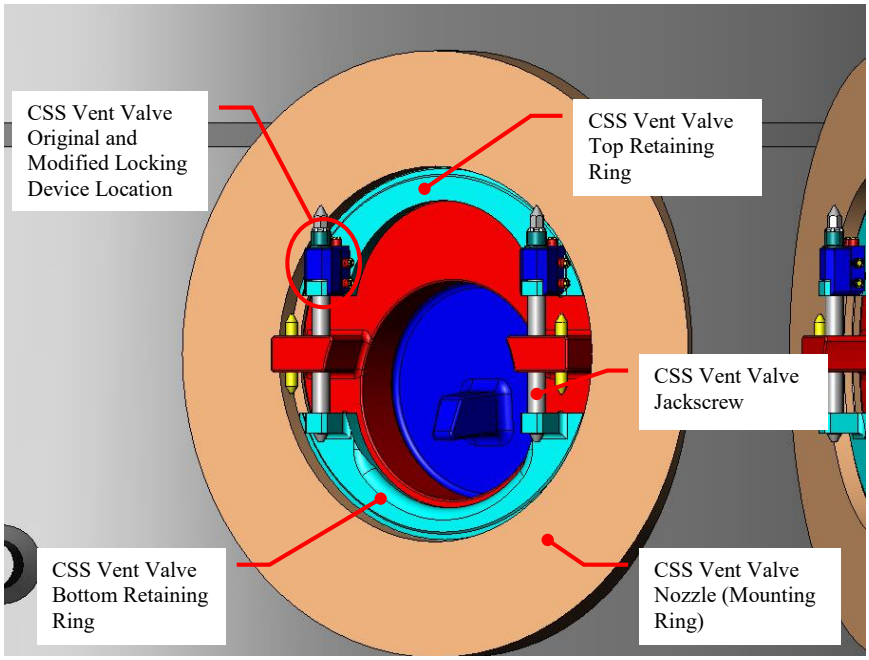

Figure 4-10
Typical vent valve assembly (inside view) for B&W-designed PWRs

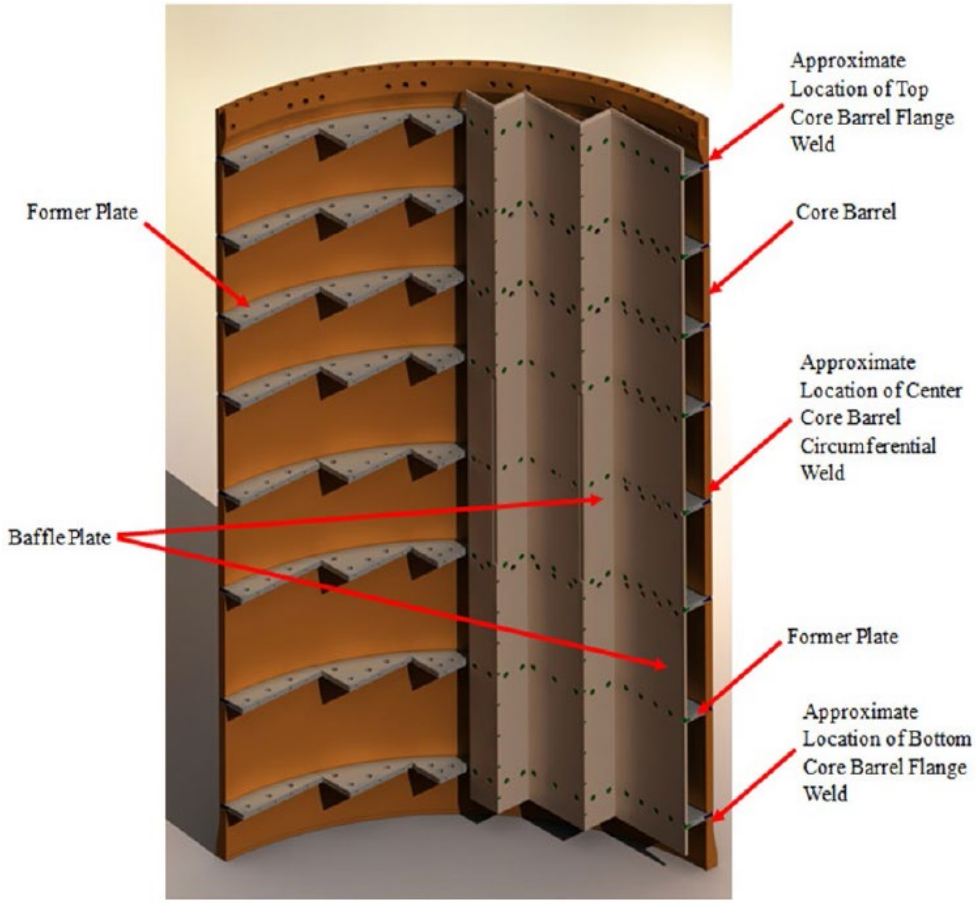

Figure 4-11
Typical core barrel assembly (cutaway view) for B&W-designed PWRs (some component items, such as bolts, not shown, for clarity)

(a)

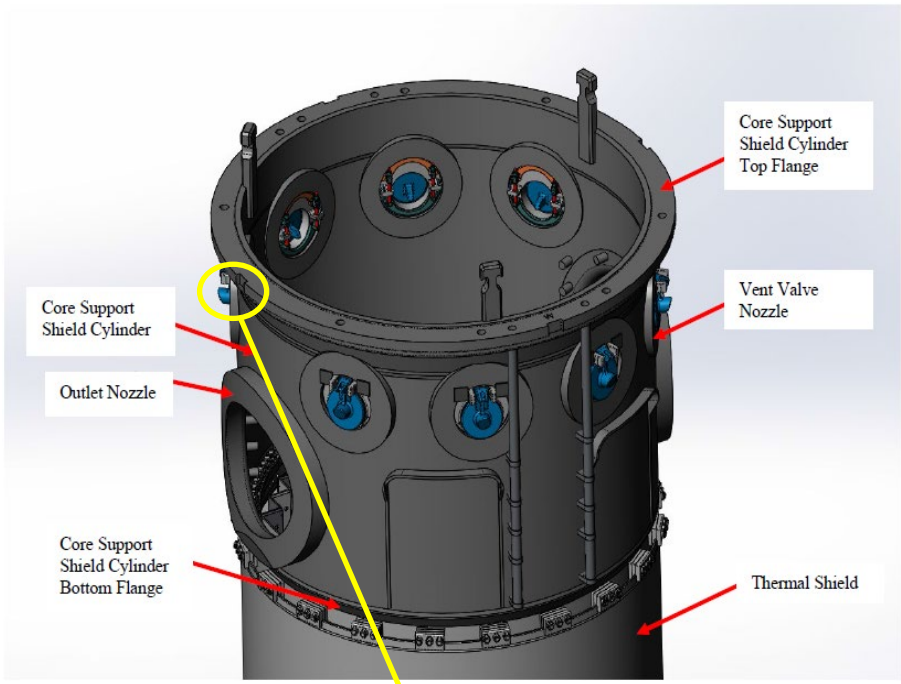

(b)

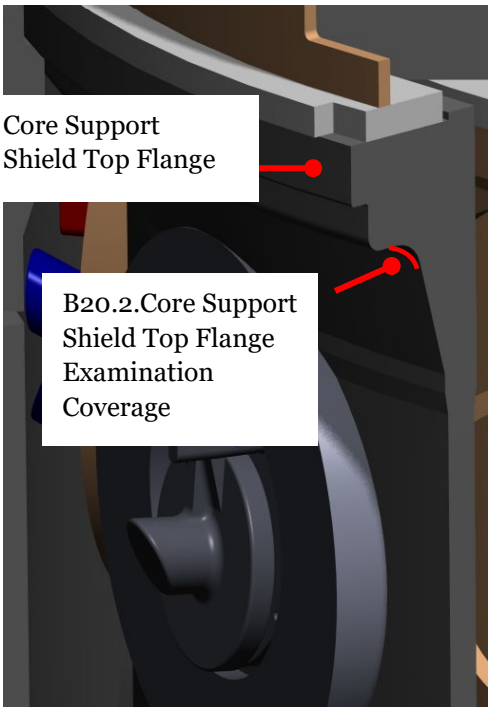

Figure 4-12
Typical (a) overall core support shield assembly, B&W-designed PWRs and (b) item B20.2. core support shield top flange with examination coverage highlighted

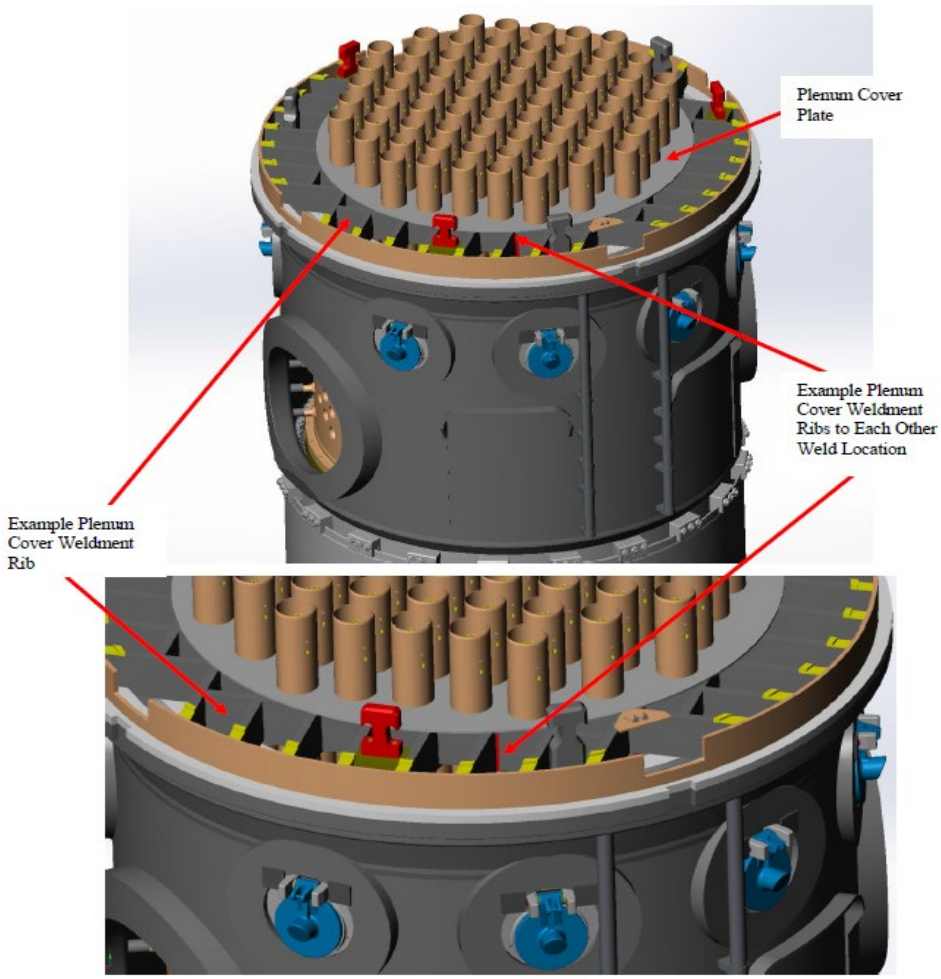

Figure 4-13
Typical plenum cover weldment ribs to each other, example weld location—B&W-designed PWRs (example weld location highlighted in red)

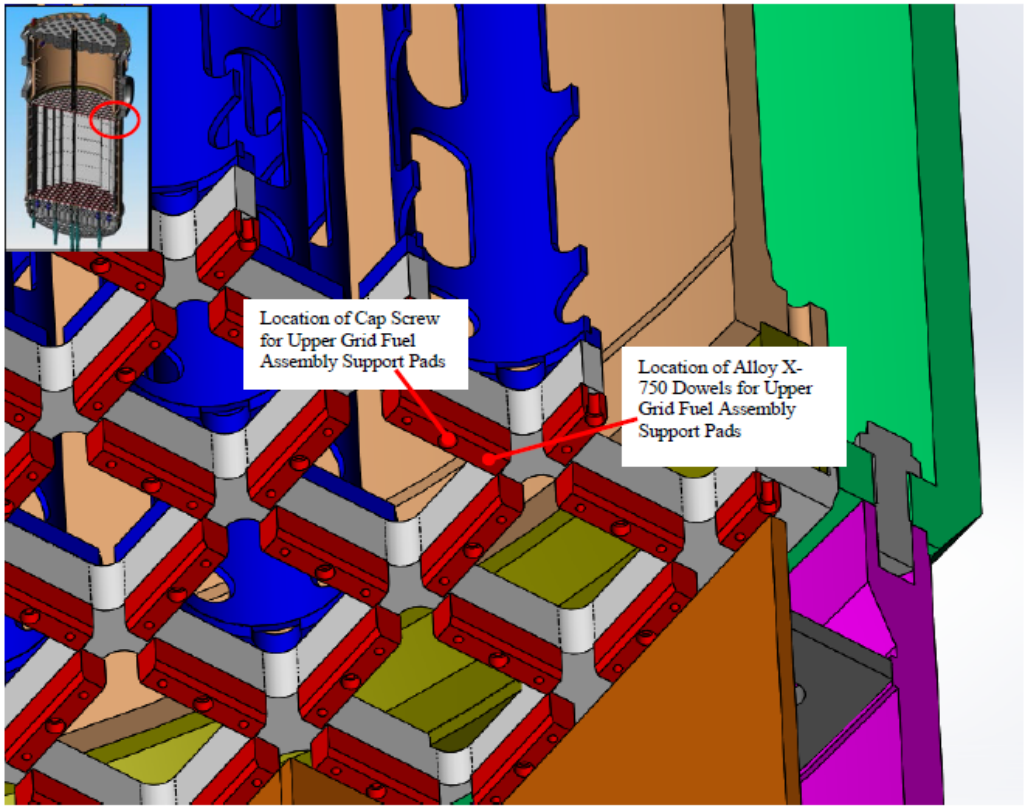

Figure 4-14
Typical upper grid fuel assembly support pads—B&W-designed PWRs (some component items not shown, for clarity)

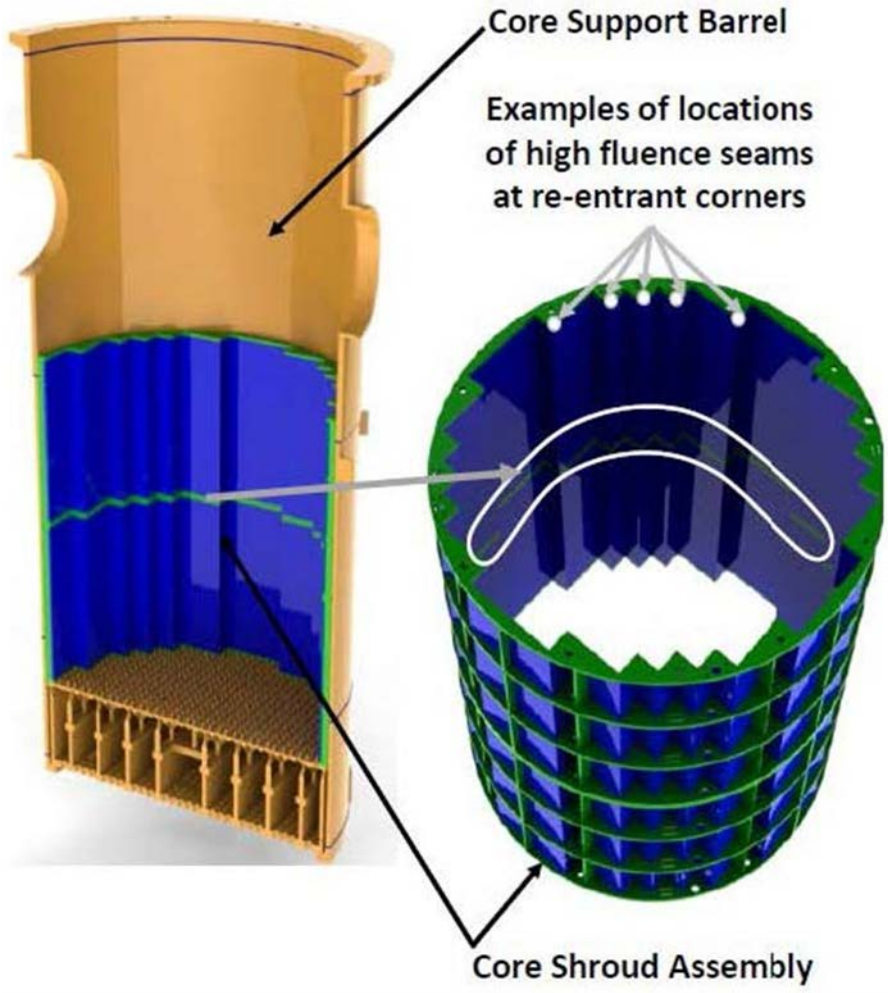

Figure 4-15
Typical CE-design core shroud assembly (welded) assembly and core shroud plate–former plate weld

(Figure intended to represent the component features and relative position to other portions of the structure and system. Figure does not contain or transmit design information and is not meant to be used for performing engineering assessments, evaluations, or examinations.)

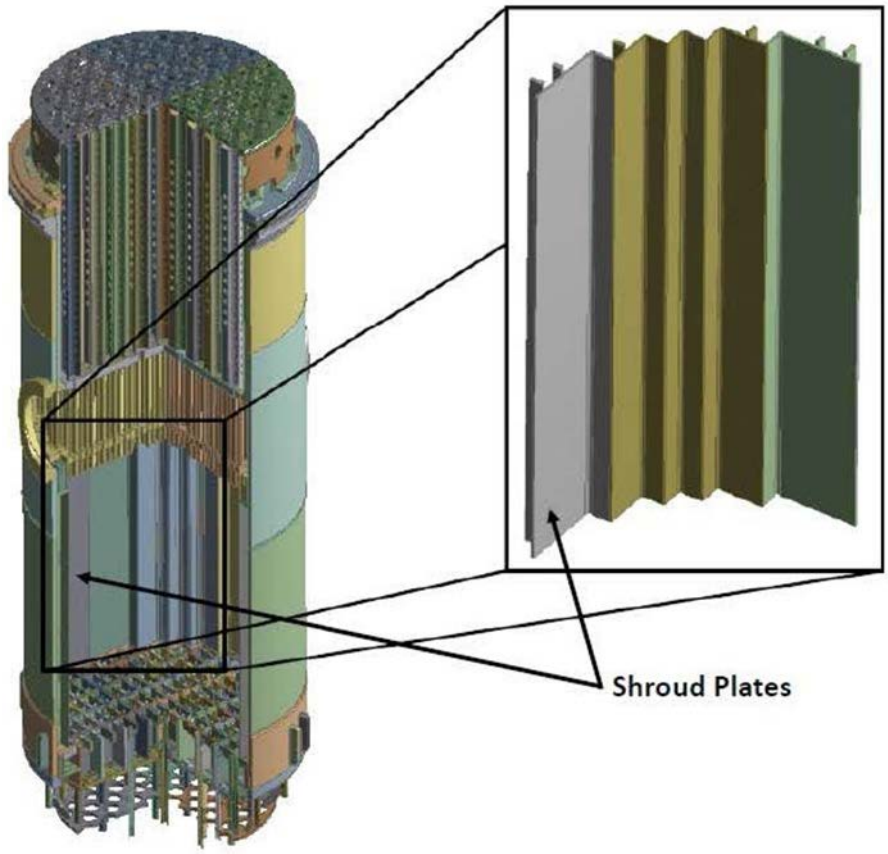

Figure 4-16
Typical CE-design core shroud assembly (welded) shroud plates

(Figure intended to represent the component features and relative position to other portions of the structure and system. Figure does not contain or transmit design information and is not meant to be used for performing engineering assessments, evaluations, or examinations.)

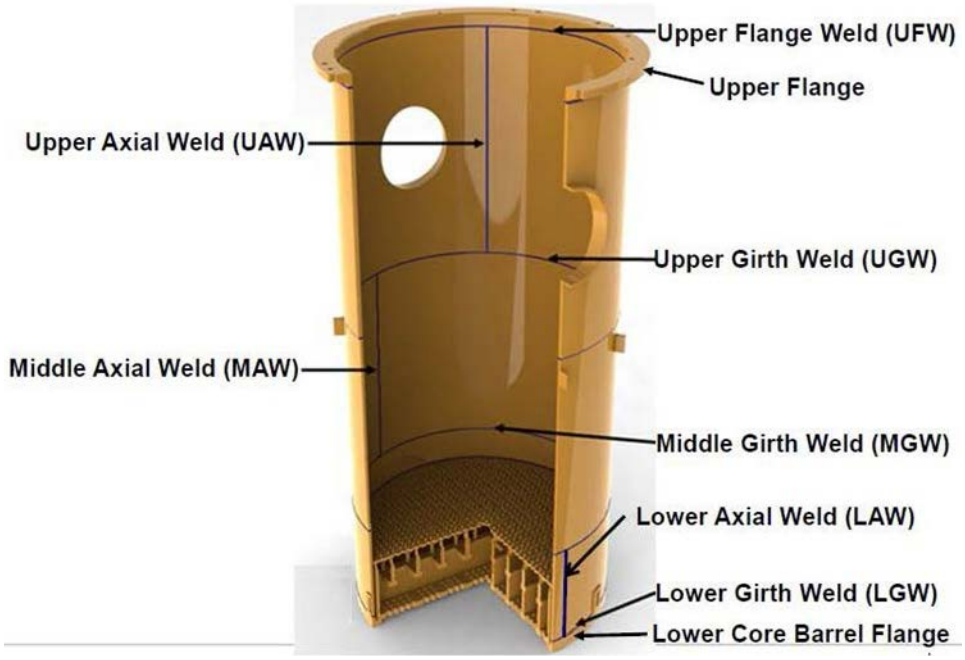

Figure 4-17
Typical CE-design core support barrel assembly—welds, upper cylinder (including welds), upper core barrel flange, core barrel assembly axial welds, lower core barrel flange

(Figure intended to represent the component features and relative position to other portions of the structure and system. Figure does not contain or transmit design information and is not meant to be used for performing engineering assessments, evaluations, or examinations.)

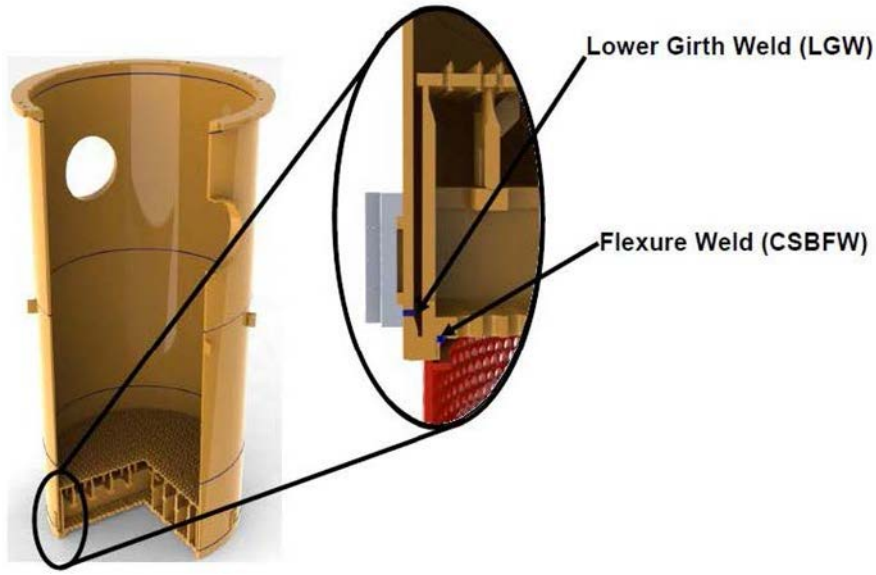

Figure 4-18
Typical CE-design core support barrel assembly CSB flexure weld (CSBFW)

(Figure intended to represent the component features and relative position to other portions of the structure and system. Figure does not contain or transmit design information and is not meant to be used for performing engineering assessments, evaluations, or examinations.)

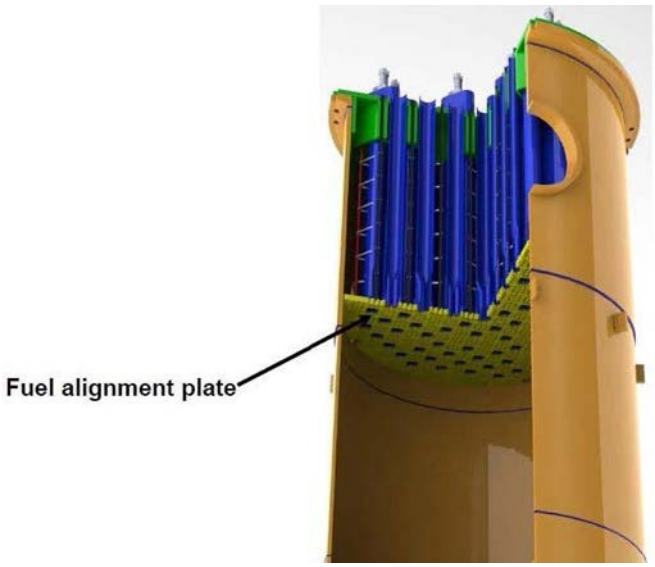

Figure 4-19
Typical CE-design upper internals assembly fuel alignment plate

(Figure intended to represent the component features and relative position to other portions of the structure and system. Figure does not contain or transmit design information and is not meant to be used for performing engineering assessments, evaluations, or examinations.)

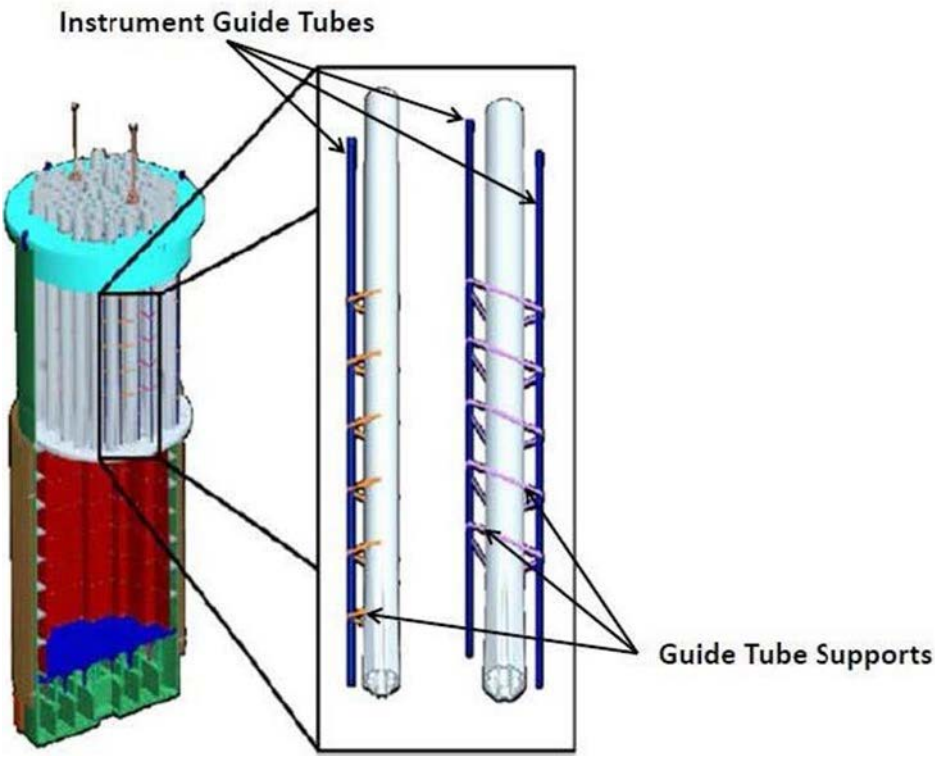

Figure 4-20
Typical CE-design control element assembly instrument guide tubes

(Figure intended to represent the component features and relative position to other portions of the structure and system. Figure does not contain or transmit design information and is not meant to be used for performing engineering assessments, evaluations, or examinations.)

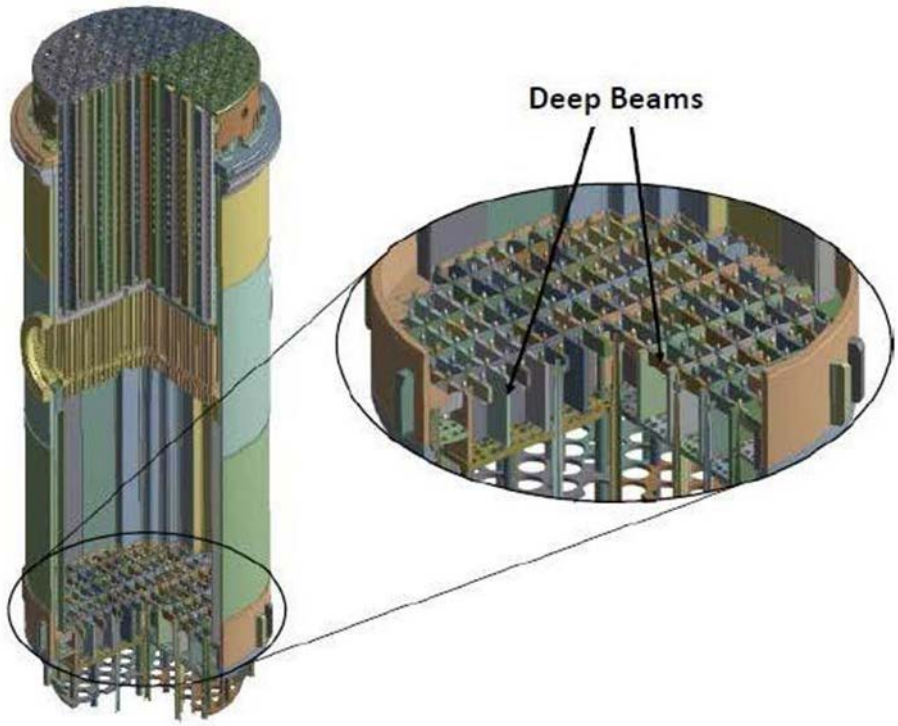

Figure 4-21
Typical CE-design lower support structure deep beams

(Figure intended to represent the component features and relative position to other portions of the structure and system. Figure does not contain or transmit design information and is not meant to be used for performing engineering assessments, evaluations, or examinations.)

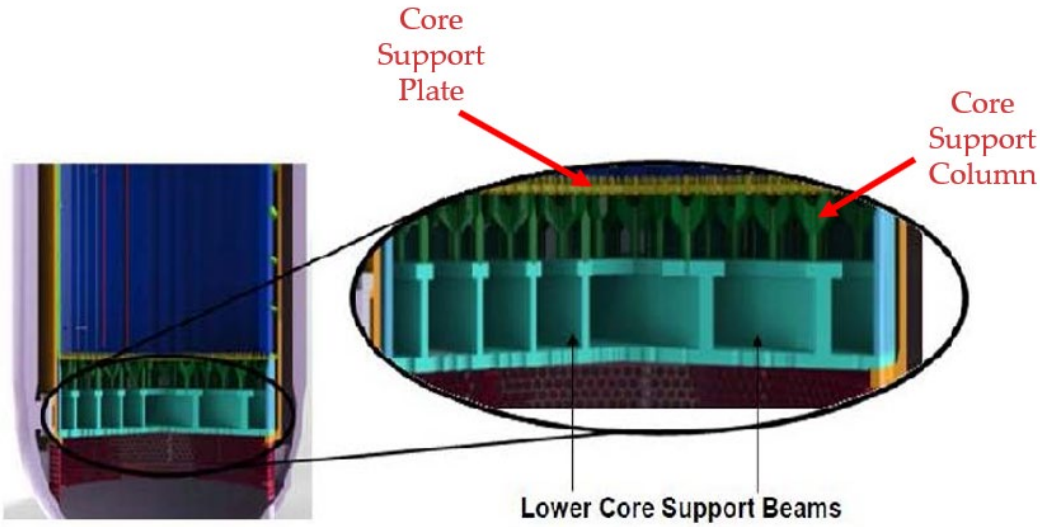

Figure 4-22
Typical CE-design lower support structure: lower core support beams, core support plate, and core support columns

(Figure intended to represent the component features and relative position to other portions of the structure and system. Figure does not contain or transmit design information and is not meant to be used for performing engineering assessments, evaluations, or examinations.)

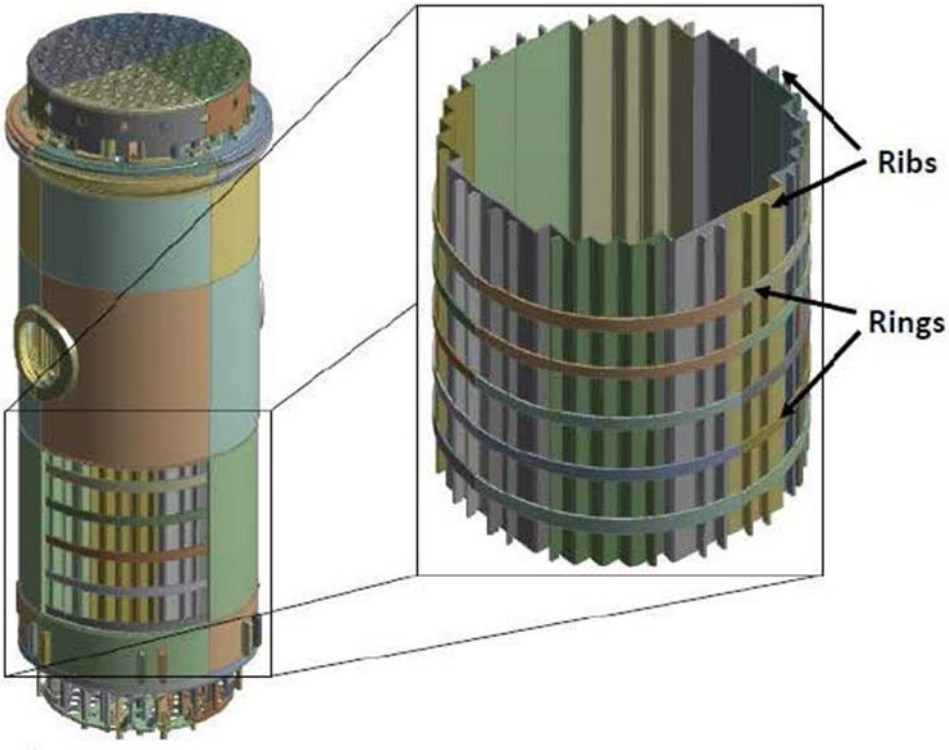

Figure 4-23
Typical CE-design core shroud assembly (welded full-height) core shroud assembly

(Figure intended to represent the component features and relative position to other portions of the structure and system. Figure does not contain or transmit design information and is not meant to be used for performing engineering assessments, evaluations, or examinations.)

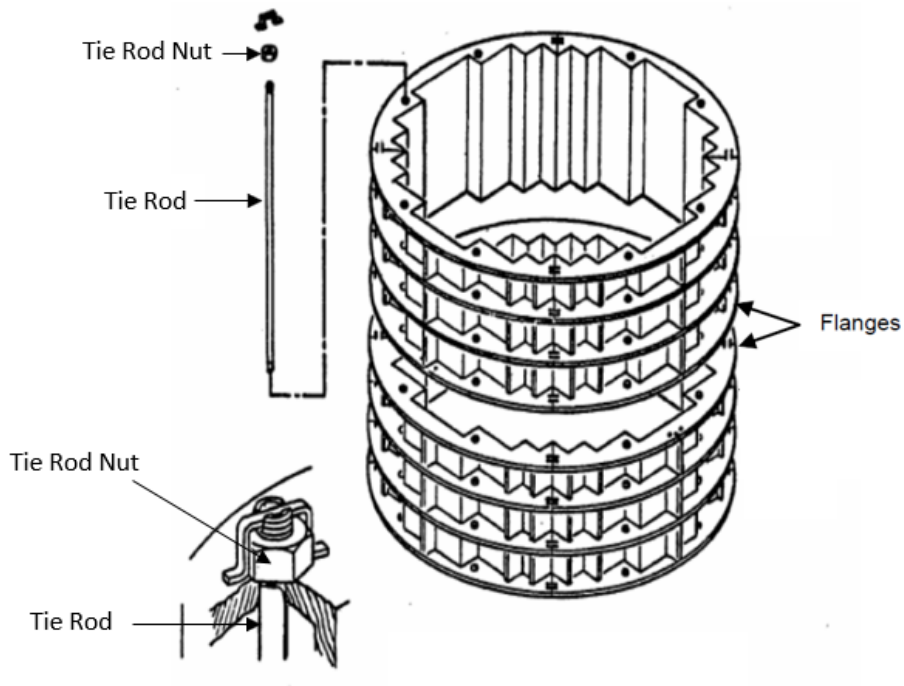

Figure 4-24
Typical CE-design core shroud assembly (welded) core shroud tie rods and nuts

(Figure intended to represent the component features and relative position to other portions of the structure and system. Figure does not contain or transmit design information and is not meant to be used for performing engineering assessments, evaluations, or examinations.)

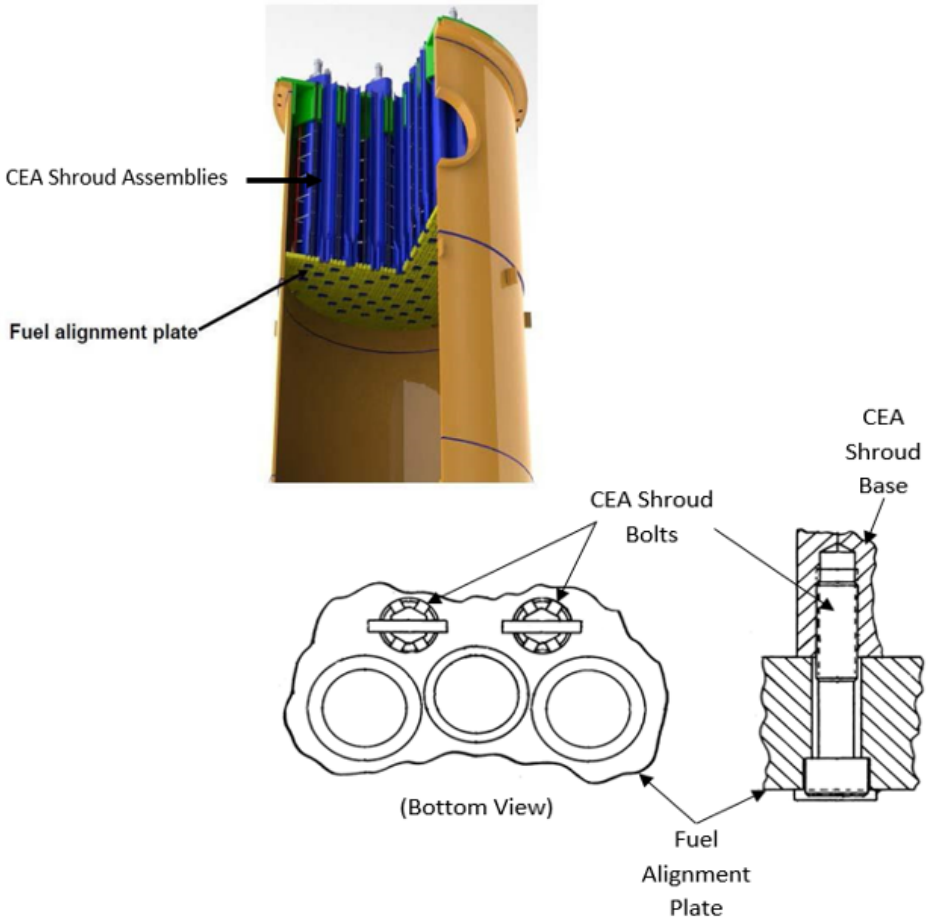

Figure 4-25
Typical CE-design CEA shroud assemblies and CEA shroud bolts

(Figure intended to represent the component features and relative position to other portions of the structure and system. Figure does not contain or transmit design information and is not meant to be used for performing engineering assessments, evaluations, or examinations.)

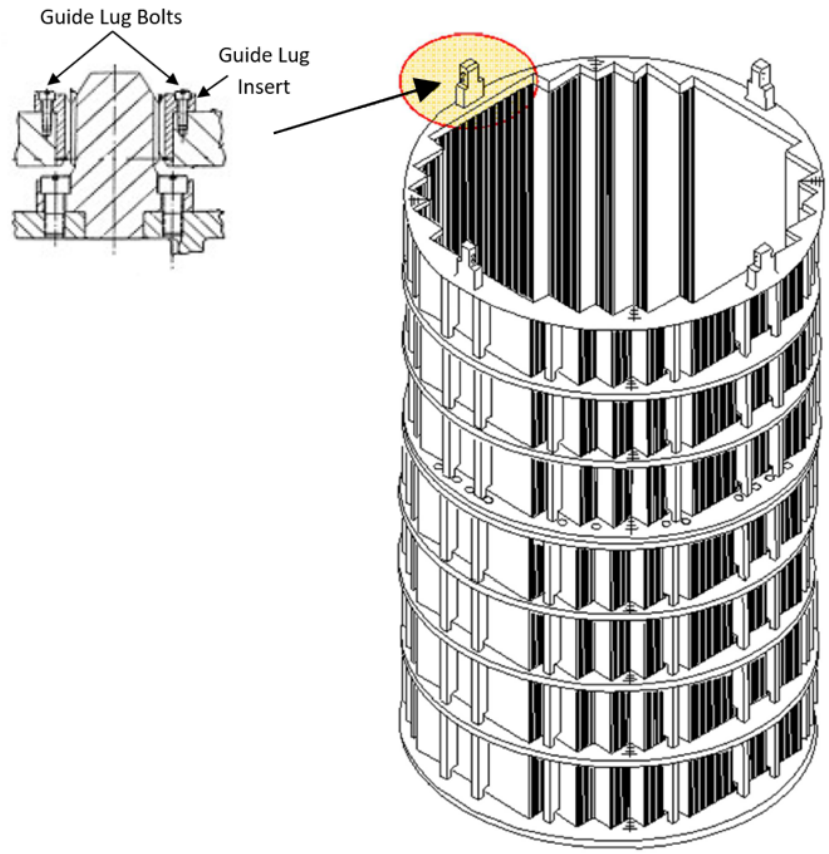

Figure 4-26
Typical CE-design core shroud assembly guide lugs, guide lug inserts, and guide lug bolts

(Figure intended to represent the component features and relative position to other portions of the structure and system. Figure does not contain or transmit design information and is not meant to be used for performing engineering assessments, evaluations, or examinations.)

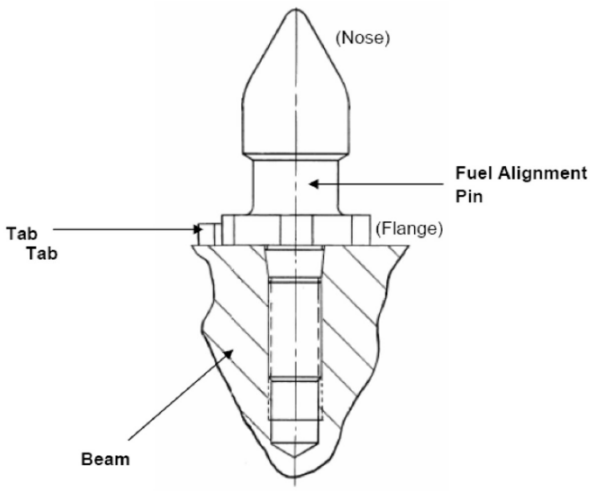

Figure 4-27
Typical CE-design lower support structure fuel alignment pins

(Figure intended to represent the component features and relative position to other portions of the structure and system. Figure does not contain or transmit design information and is not meant to be used for performing engineering assessments, evaluations, or examinations.)

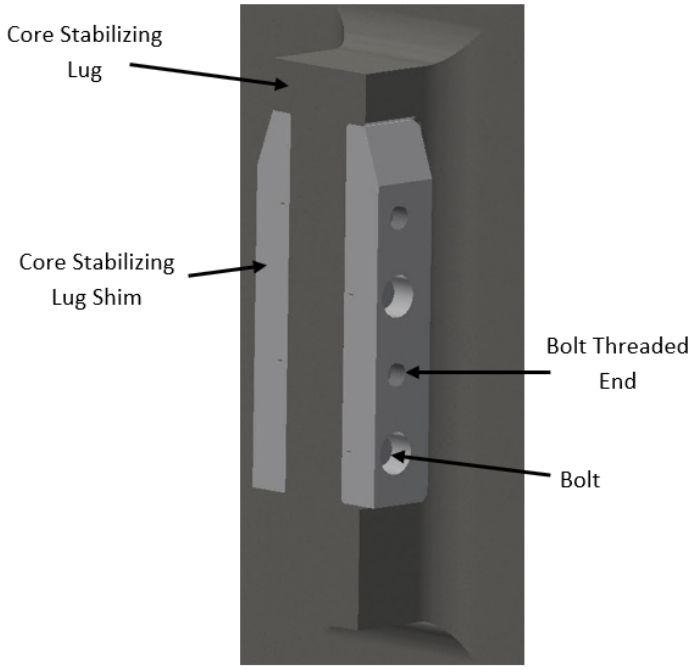

Figure 4-28
Typical CE-design core-stabilizing lugs and shims and core-stabilizing lug shim bolts

(Figure intended to represent the component features and relative position to other portions of the structure and system. Figure does not contain or transmit design information and is not meant to be used for performing engineering assessments, evaluations, or examinations.)

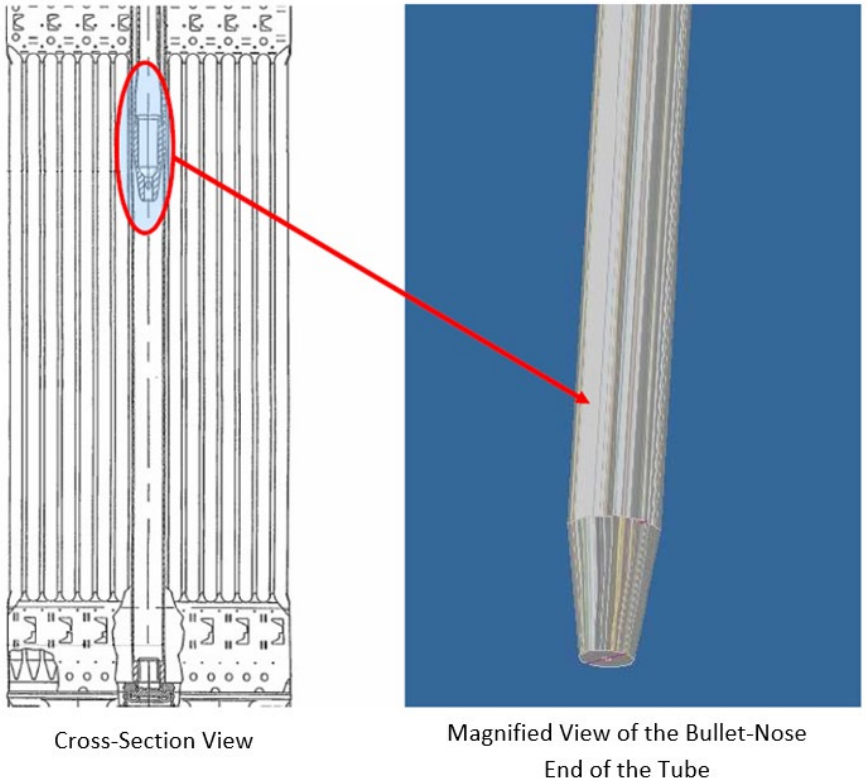

Figure 4-29
Typical CE-design in-core instrumentation thimble tubes—lower

(Figure intended to represent the component features and relative position to other portions of the structure and system. Figure does not contain or transmit design information and is not meant to be used for performing engineering assessments, evaluations, or examinations.)

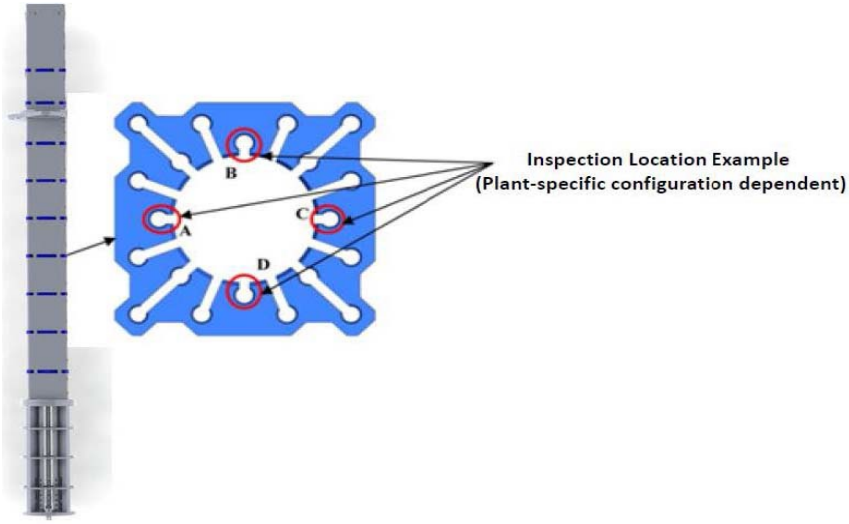

Figure 4-30
Typical Westinghouse-design control rod guide tube assembly guide plates (cards)

(Figure intended to represent the component features and relative position to other portions of the structure and system. Figure does not contain or transmit design information and is not meant to be used for performing engineering assessments, evaluations, or examinations.)

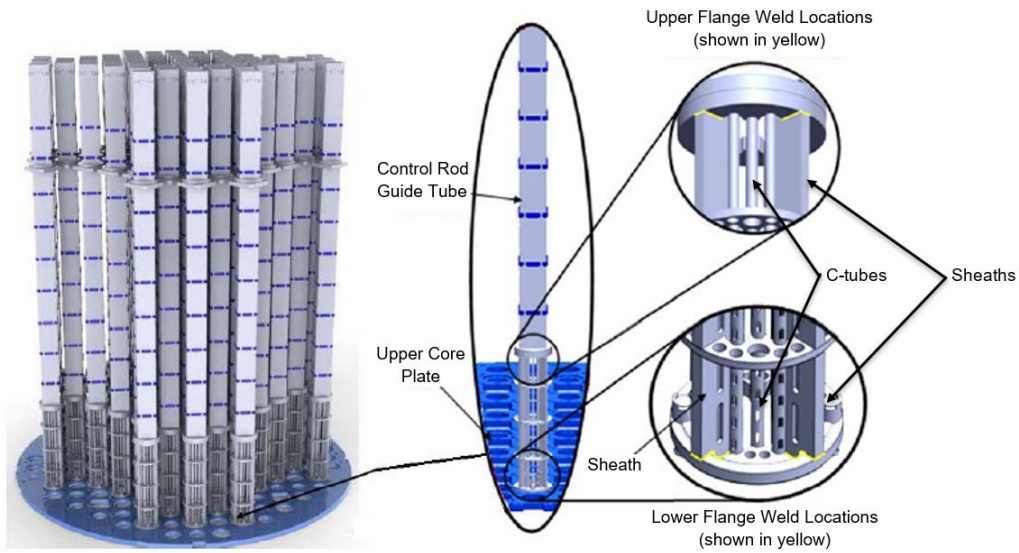

Figure 4-31
Typical Westinghouse-design control rod guide tube assembly lower flange welds, C-tubes, and sheaths

(Figure intended to represent the component features and relative position to other portions of the structure and system. Figure does not contain or transmit design information and is not meant to be used for performing engineering assessments, evaluations, or examinations.)

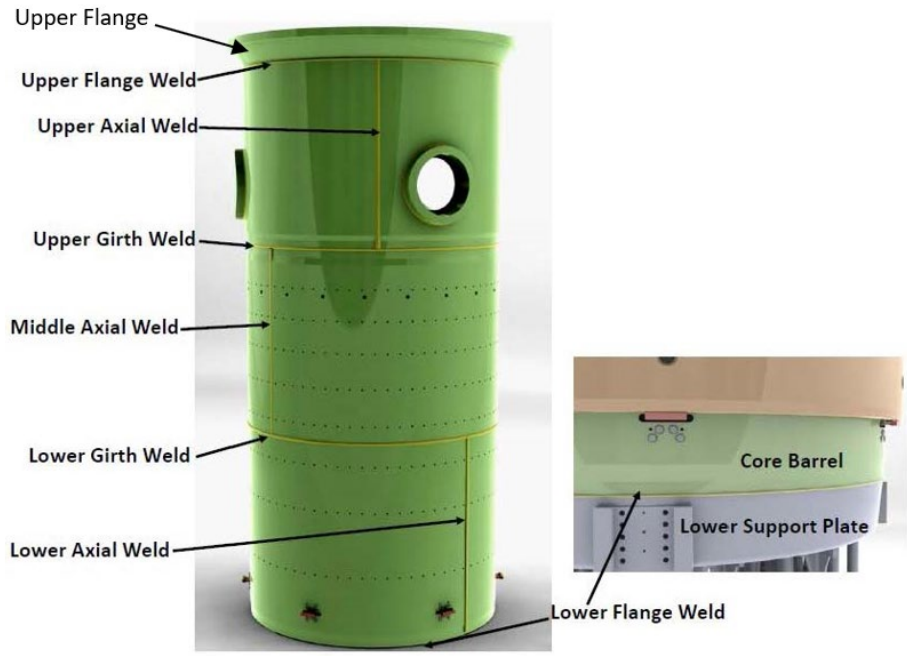

Figure 4-32
Typical Westinghouse-design core barrel assembly core barrel welds

(Figure intended to represent the component features and relative position to other portions of the structure and system. Figure does not contain or transmit design information and is not meant to be used for performing engineering assessments, evaluations, or examinations.)

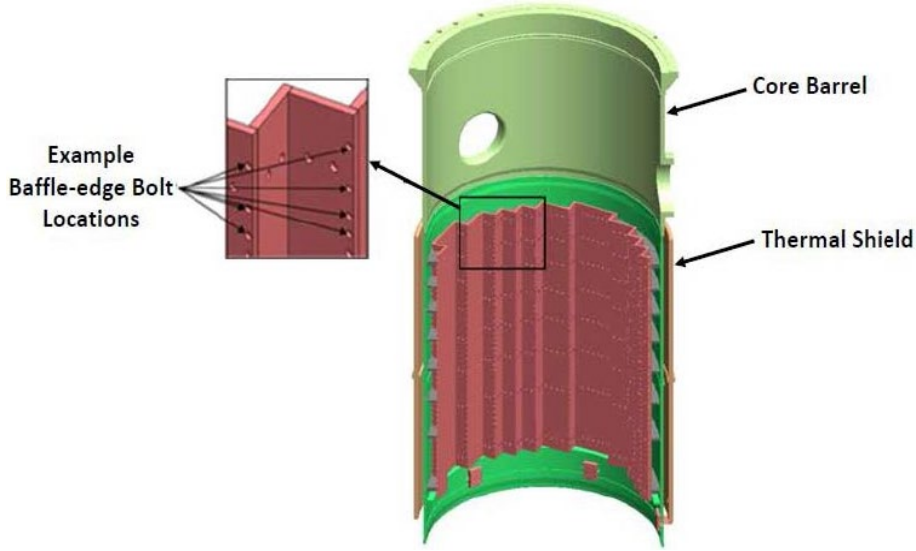

Figure 4-33
Typical Westinghouse-design baffle-former assembly baffle-edge bolts

(Figure intended to represent the component features and relative position to other portions of the structure and system. Figure does not contain or transmit design information and is not meant to be used for performing engineering assessments, evaluations, or examinations.)

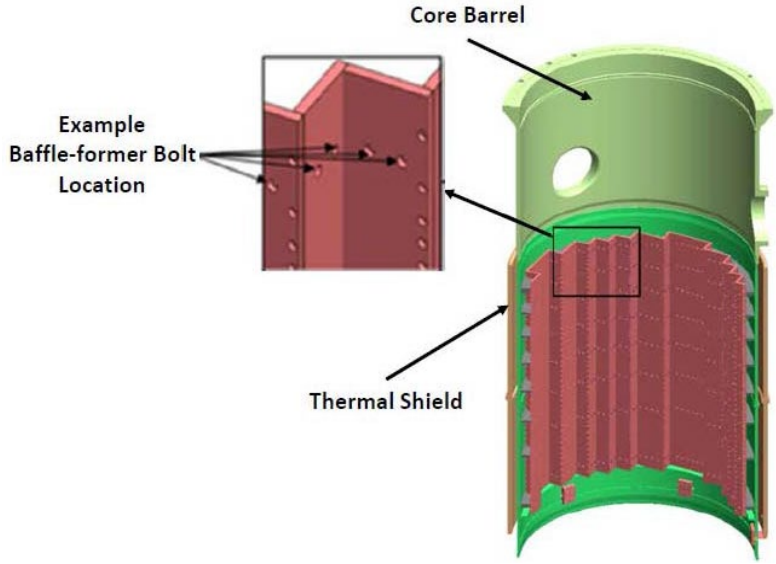

Figure 4-34
Typical Westinghouse-design baffle-former assembly baffle-former bolts

(Figure intended to represent the component features and relative position to other portions of the structure and system. Figure does not contain or transmit design information and is not meant to be used for performing engineering assessments, evaluations, or examinations.)

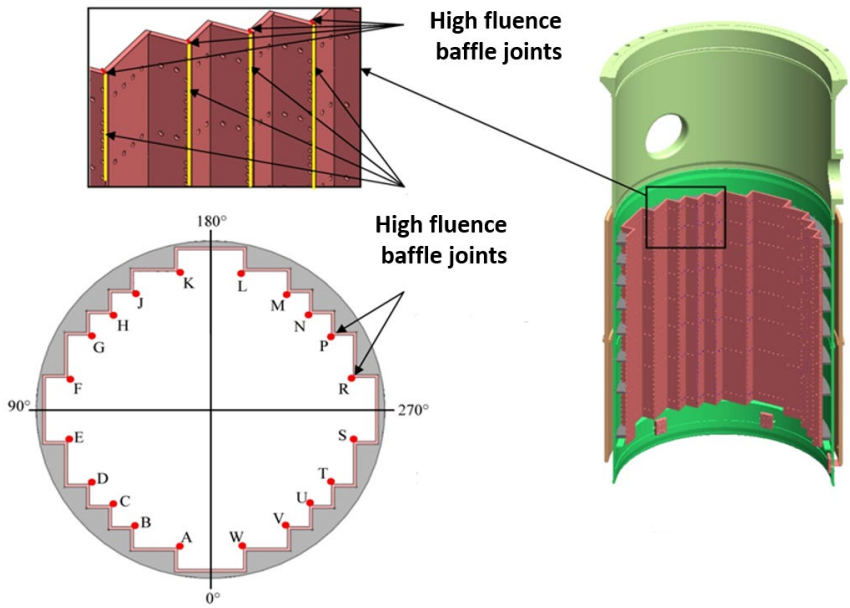

Figure 4-35
Typical Westinghouse-design baffle-former assembly

(Figure intended to represent the component features and relative position to other portions of the structure and system. Figure does not contain or transmit design information and is not meant to be used for performing engineering assessments, evaluations, or examinations.)

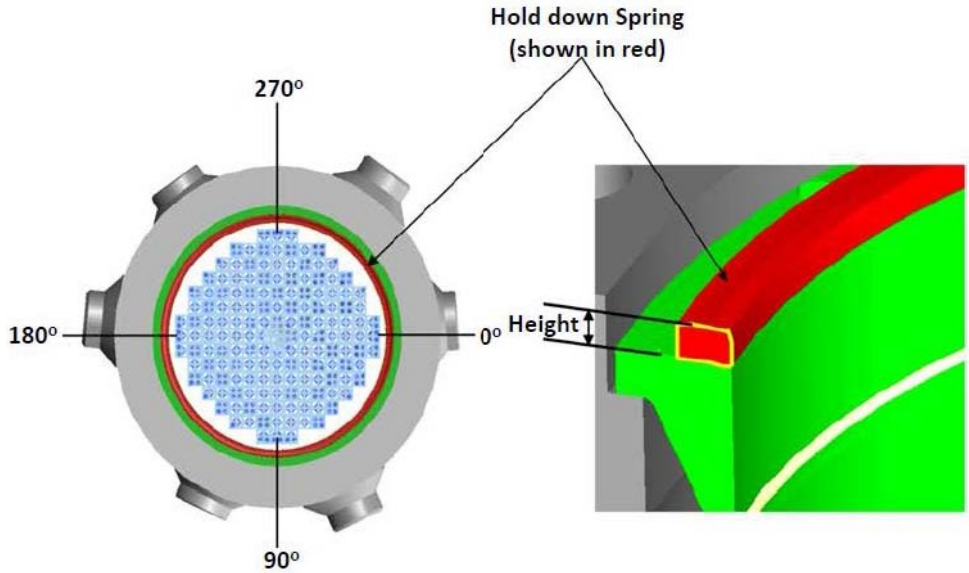

Figure 4-36
Typical Westinghouse-design alignment and interfacing components internals hold-down spring

(Figure intended to represent the component features and relative position to other portions of the structure and system. Figure does not contain or transmit design information and is not meant to be used for performing engineering assessments, evaluations, or examinations.)

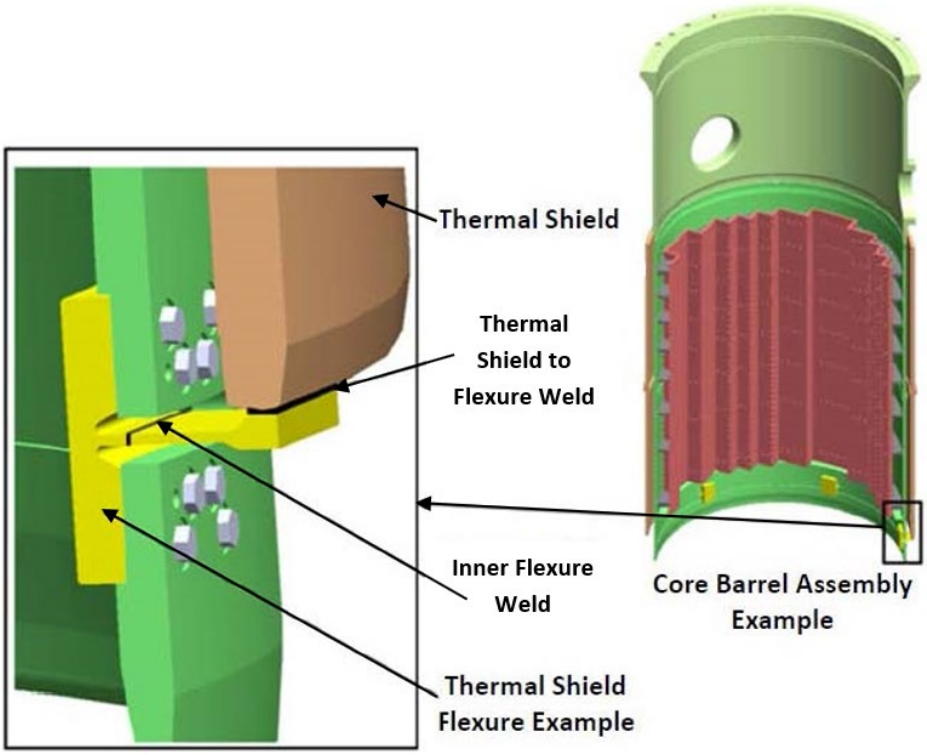

Figure 4-37
Typical Westinghouse-design thermal shield assembly thermal shield flexures

(Figure intended to represent the component features and relative position to other portions of the structure and system. Figure does not contain or transmit design information and is not meant to be used for performing engineering assessments, evaluations, or examinations.)

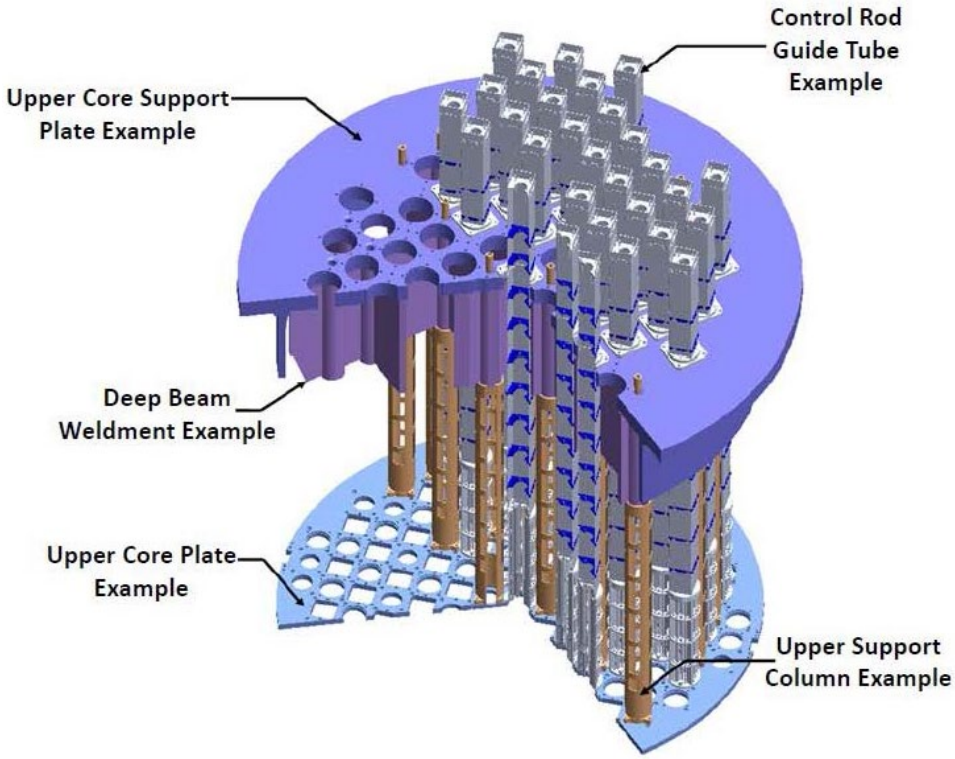

Figure 4-38
Typical Westinghouse-design upper internals assembly upper core plate

(Figure intended to represent the component features and relative position to other portions of the structure and system. Figure does not contain or transmit design information and is not meant to be used for performing engineering assessments, evaluations, or examinations.)

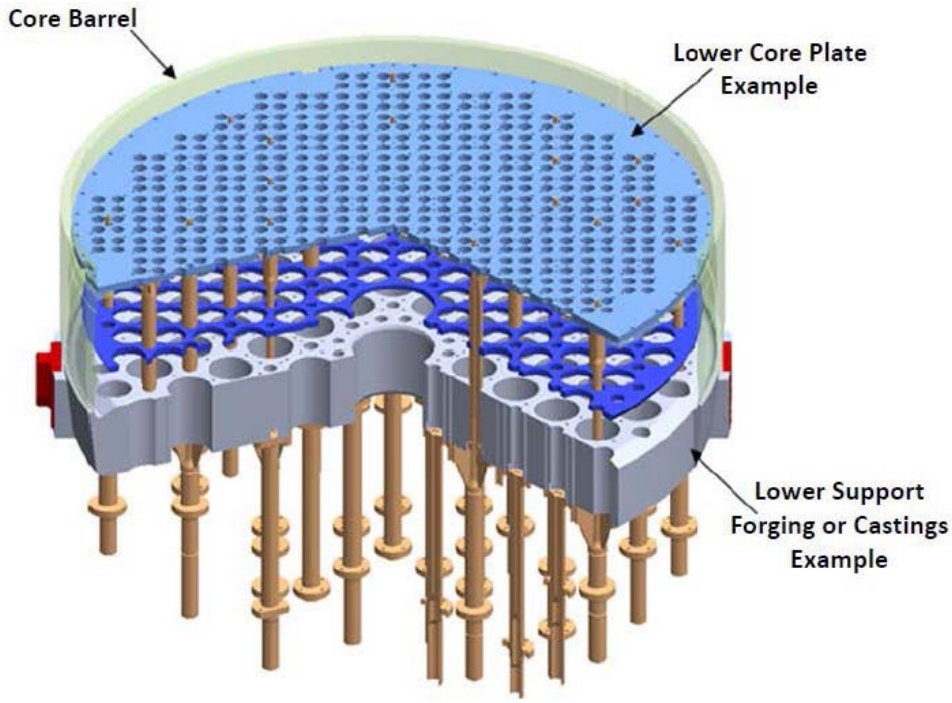

Figure 4-39
Typical Westinghouse-design lower internals assembly lower support forging or castings

(Figure intended to represent the component features and relative position to other portions of the structure and system. Figure does not contain or transmit design information and is not meant to be used for performing engineering assessments, evaluations, or examinations.)

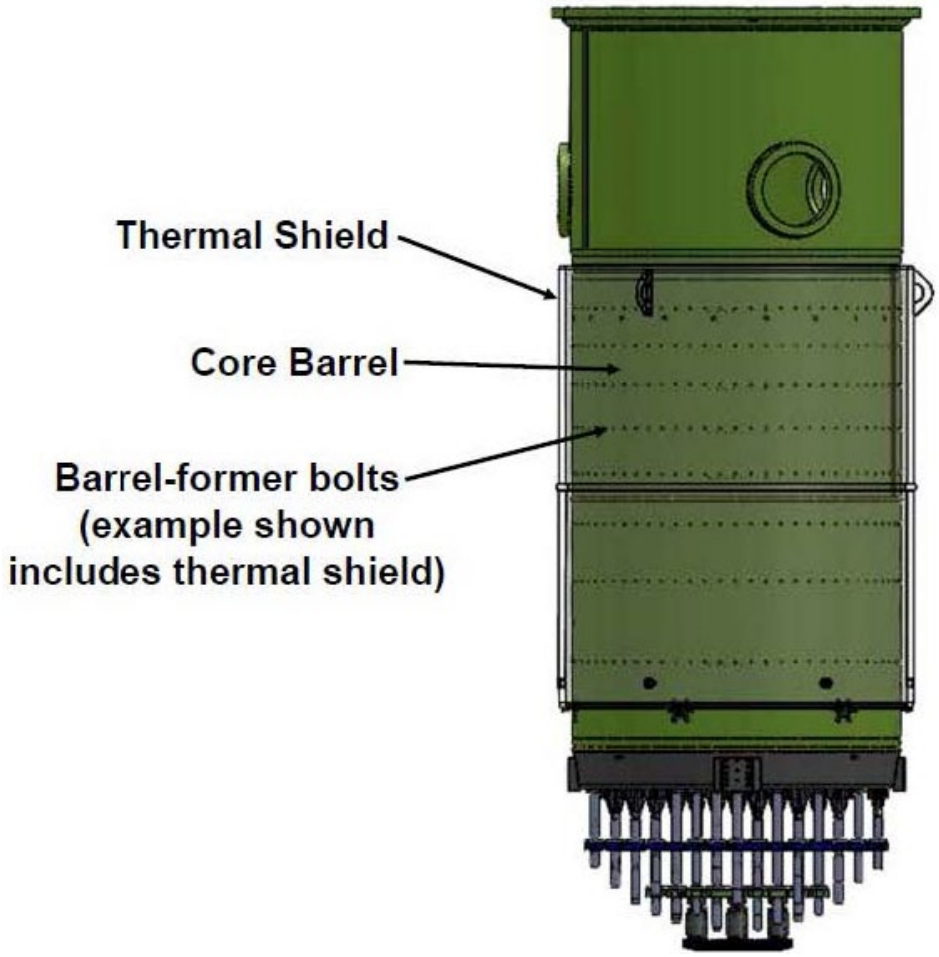

Figure 4-40
Typical Westinghouse-design core barrel assembly barrel-former bolts

(Figure intended to represent the component features and relative position to other portions of the structure and system. Figure does not contain or transmit design information and is not meant to be used for performing engineering assessments, evaluations, or examinations.)

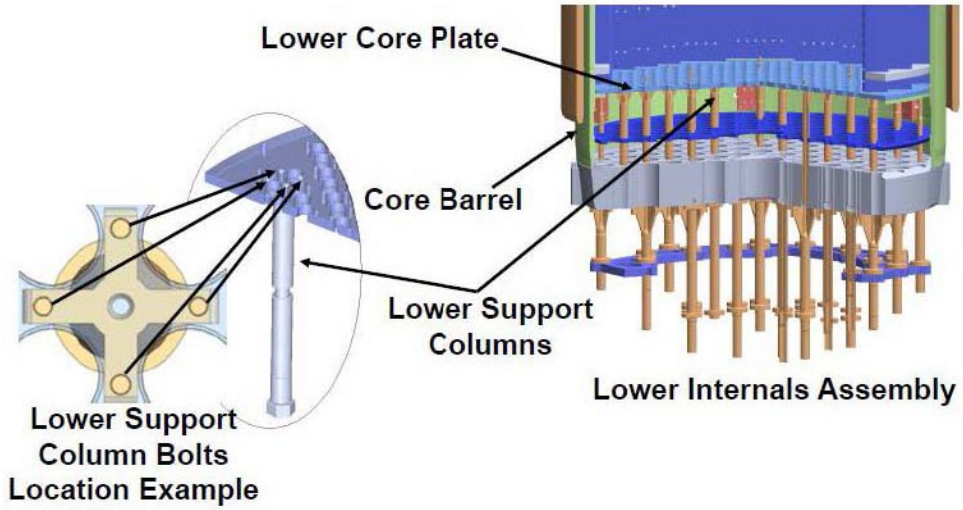

Figure 4-41
Typical Westinghouse-design lower support assembly lower support column bolts

(Figure intended to represent the component features and relative position to other portions of the structure and system. Figure does not contain or transmit design information and is not meant to be used for performing engineering assessments, evaluations, or examinations.)

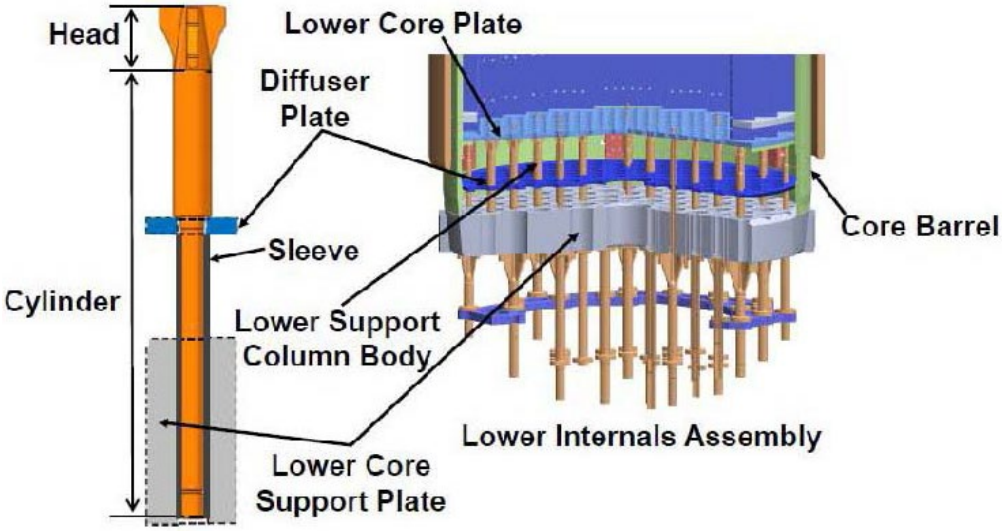

Figure 4-42
Typical Westinghouse-design lower support assembly lower support column bodies (cast and non-cast)

(Figure intended to represent the component features and relative position to other portions of the structure and system. Figure does not contain or transmit design information and is not meant to be used for performing engineering assessments, evaluations, or examinations.)

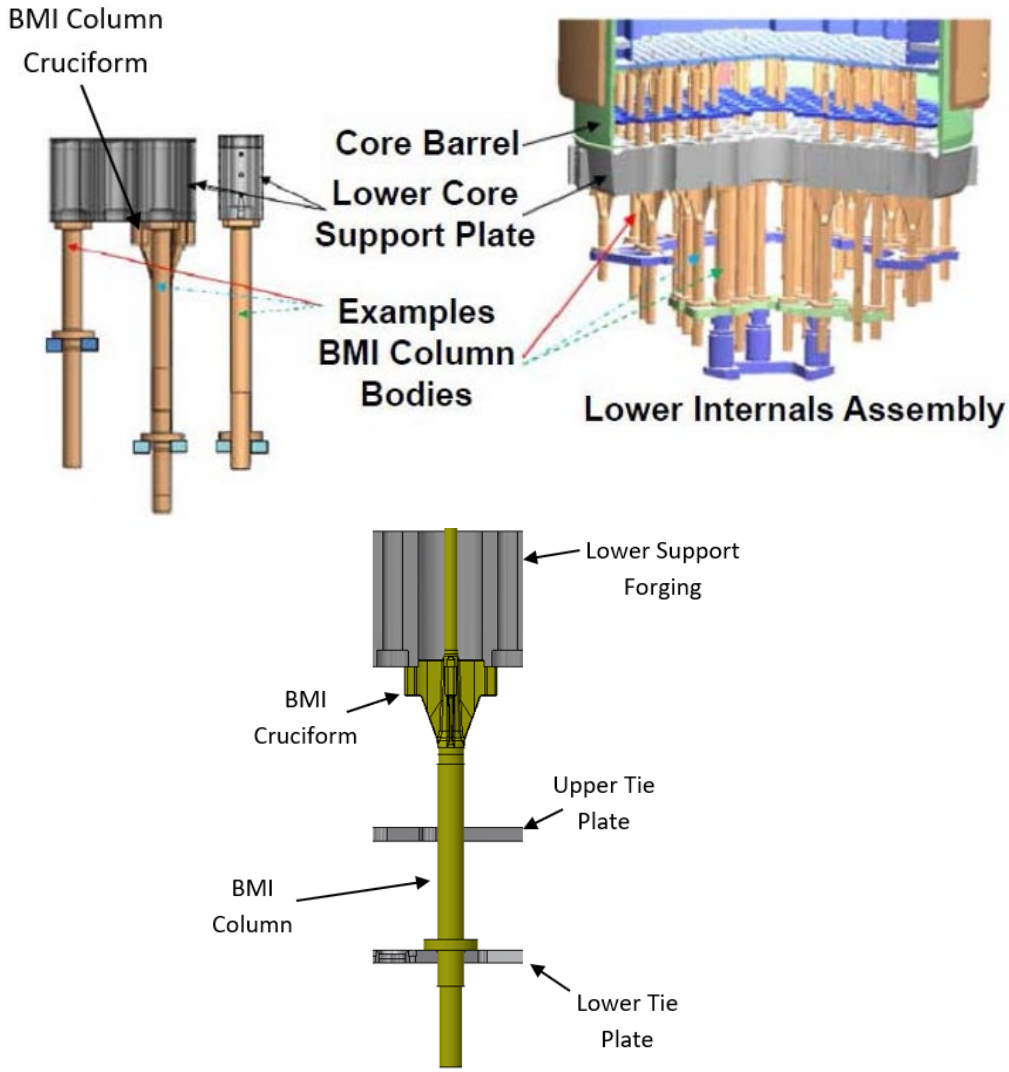

Figure 4-43
Typical Westinghouse-design lower support assembly bottom-mounted instrumentation (BMI) column bodies and cruciforms

(Figure intended to represent the component features and relative position to other portions of the structure and system. Figure does not contain or transmit design information and is not meant to be used for performing engineering assessments, evaluations, or examinations.)

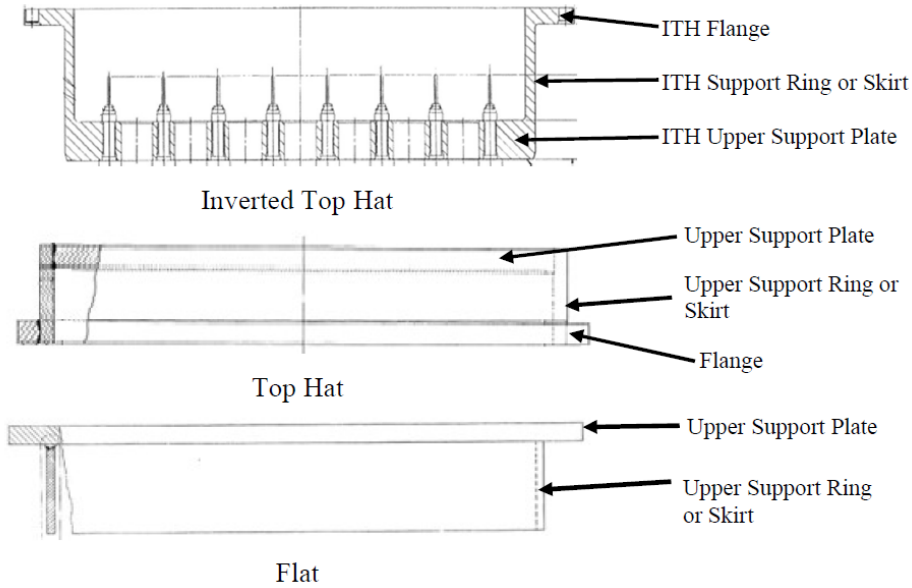

Figure 4-44
Typical Westinghouse-design upper support ring or skirt

(Figure intended to represent the component features and relative position to other portions of the structure and system. Figure does not contain or transmit design information and is not meant to be used for performing engineering assessments, evaluations, or examinations.)

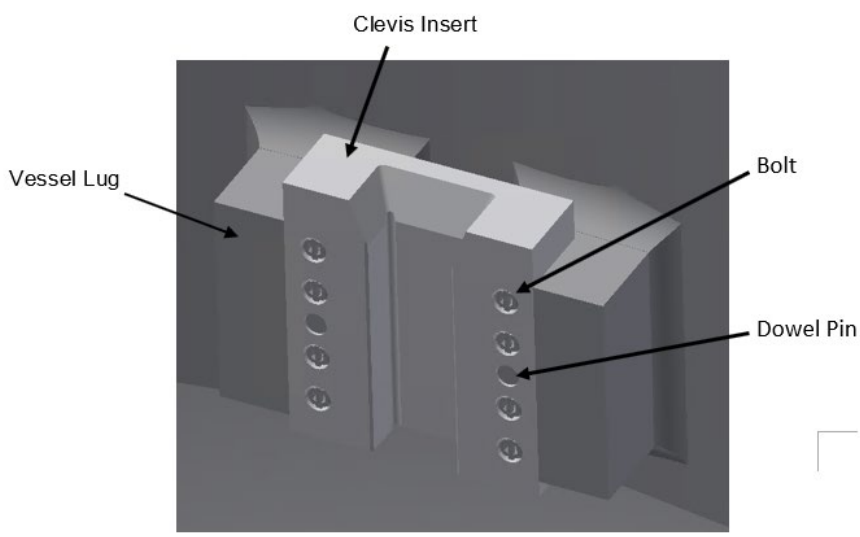

Figure 4-45
Typical Westinghouse-design clevis insert and clevis insert bolts

(Figure intended to represent the component features and relative position to other portions of the structure and system. Figure does not contain or transmit design information and is not meant to be used for performing engineering assessments, evaluations, or examinations.)

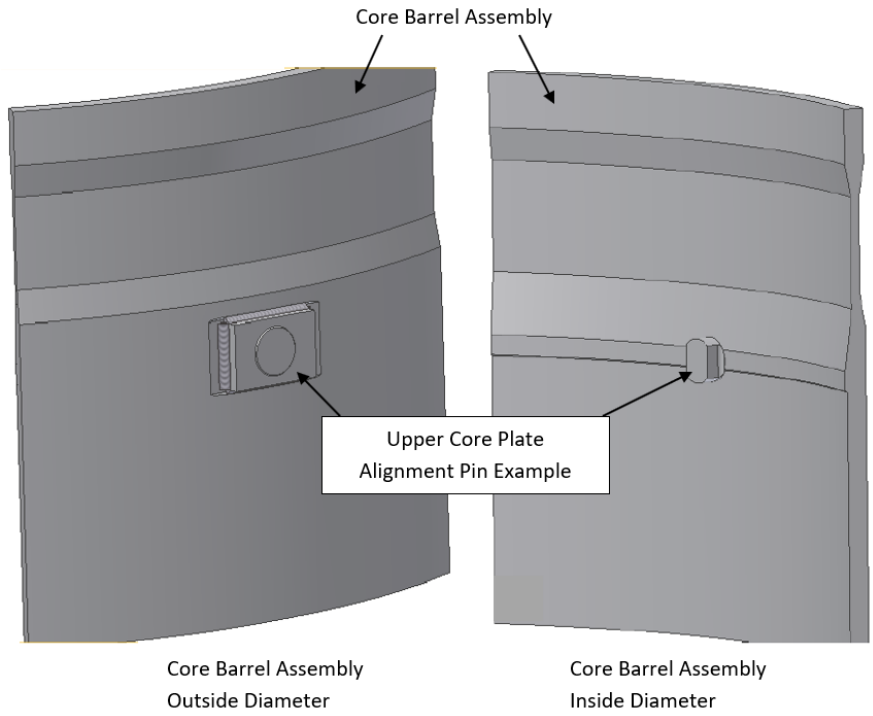

Figure 4-46
Typical Westinghouse-design upper core plate alignment pins

(Figure intended to represent the component features and relative position to other portions of the structure and system. Figure does not contain or transmit design information and is not meant to be used for performing engineering assessments, evaluations, or examinations.)

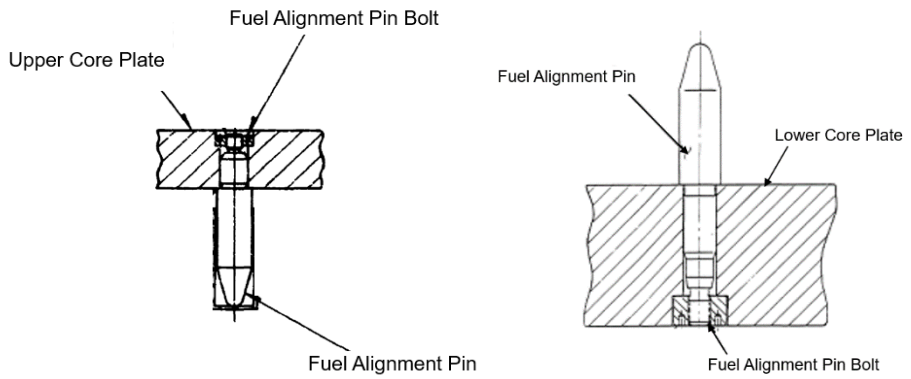

Figure 4-47
Typical Westinghouse-design upper fuel alignment pins and lower fuel alignment pins

(Figure intended to represent the component features and relative position to other portions of the structure and system. Figure does not contain or transmit design information and is not meant to be used for performing engineering assessments, evaluations, or examinations.)

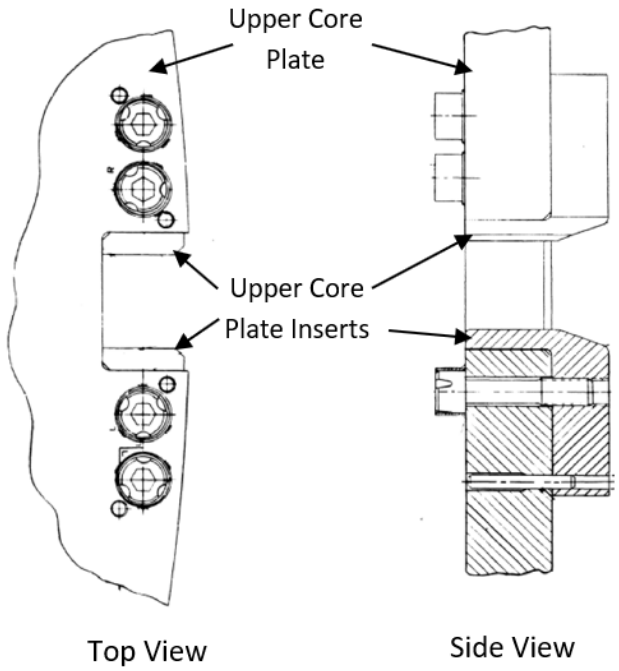

Figure 4-48
Typical Westinghouse-design upper core plate inserts

(Figure intended to represent the component features and relative position to other portions of the structure and system. Figure does not contain or transmit design information and is not meant to be used for performing engineering assessments, evaluations, or examinations.)

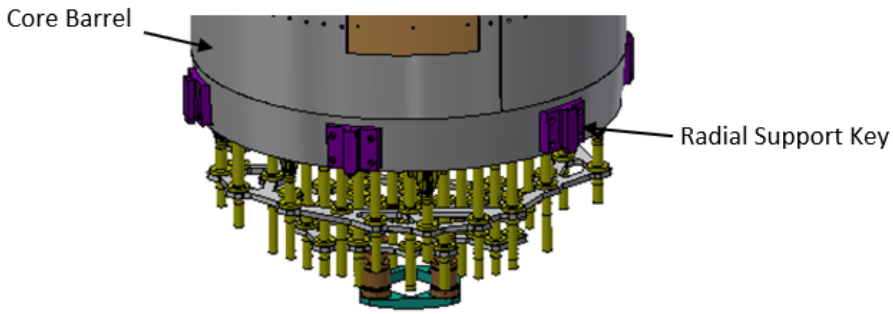

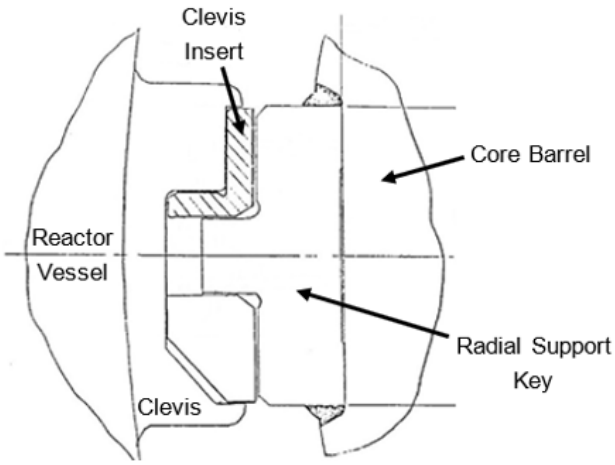

Top View of Radial
Support Key

Figure 4-49
Typical Westinghouse-design radial support keys

(Figure intended to represent the component features and relative position to other portions of the structure and system. Figure does not contain or transmit design information and is not meant to be used for performing engineering assessments, evaluations, or examinations.)

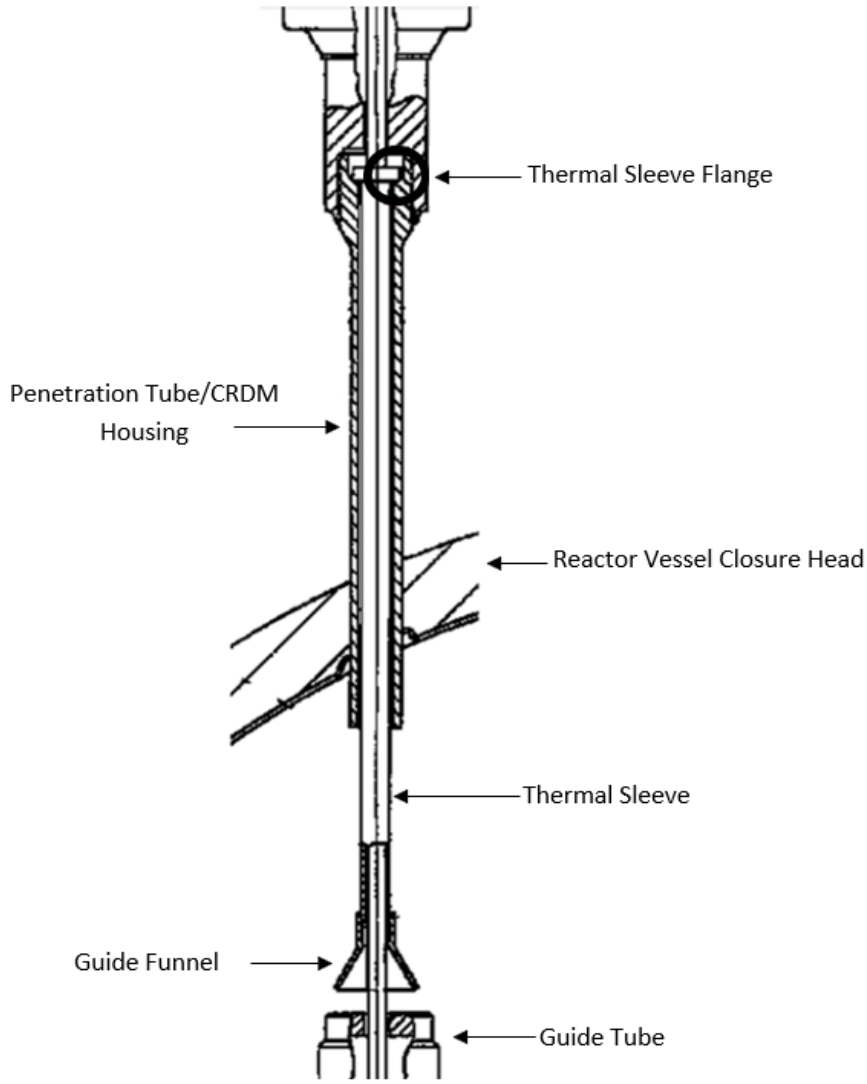

Figure 4-50
Typical Westinghouse-design thermal sleeves

(Figure intended to represent the component features and relative position to other portions of the structure and system. Figure does not contain or transmit design information and is not meant to be used for performing engineering assessments, evaluations, or examinations.)

Section 5: Examination Acceptance Criteria and Expansion Criteria

The purpose of this section is to provide examination acceptance criteria for conditions detected as a result of the examination requirements in Section 4, Table 4-1 through Table 4-6, and criteria for expanding examinations to the Expansion components when warranted by the level of degradation detected in the Primary components.

Examination acceptance criteria identify the visual examination relevant condition(s) or signal-based level or relevance of an indication that requires formal disposition for acceptability. Based on the identified condition, and supplemental examinations if required, the disposition process results in an evaluation and determination of whether to accept the condition until the next examination or repair or replace the item. An acceptable disposition process is described in Section 6 and in WCAP-17096-NP-A [33]. Section 5.1 provides a discussion of relevant conditions applicable to the visual examination methods and of relevant indications applicable to the volumetric examinations employed in the guidelines. Section 5.2 provides examination acceptance criteria for physical measurements. These criteria are contained in Table 5-1, Table 5-2, and Table 5-3 for B&W, CE, and Westinghouse plants, respectively.

Table 5-1, Table 5-2, and Table 5-3 also contain expansion criteria for B&W, CE, and Westinghouse plants, respectively. Expansion criteria are intended to form the basis for decisions about expanding the set of components selected for examination or other aging management activity, to determine whether the level of degradation represented by the detected conditions has extended to other components judged to be less affected by the degradation.

The component population for expansion criteria is a population that has received adequate service time to experience the relevant aging degradation mechanism. For example, if a plant has replaced a partial number of relevant components and the replacement components have not received adequate operating time by calendar year or EFPY to experience degradation as specified in Table 4-1, Table 4-2, or Table 4-3, then only the original population of components would be considered toward expansion criteria. Guidance for addressing this partial replacement scenario and other potential impacts on the Primary–Expansion relationships is provided in Appendix C.

Table 5-1
B&W plants examination acceptance and expansion criteria

Primary Item	Applicability (Note 1)	Primary Item Examination Acceptance Criteria (Notes 2,3)	Expansion Link(s)	Expansion Criteria (Note 3)	Expansion Item Examination Acceptance Criteria
B1. Plenum Cover Assembly and Core Support Shield Assembly a. Plenum cover weldment rib pads b. Plenum cover support flange c. Plenum cover support ring d. CSS top flange	All plants 40 < years ≤ 80	Visual (VT-3) examination. The specific relevant condition for these items is (a) evidence of a general polished area over the plenum cover support ring and plenum cover weldment rib pad region and a smeared image of the RV closure head contact region, or (b) observance of an interrupted ring in the circumferential direction on the topside of the CSS top flange contact region.	None	N/A	N/A
B2. Control Rod Guide Tube Assembly CRGT spacer castings	All plants 40 < years ≤ 80	Visual (VT-3) examination. The specific relevant condition is evidence of fractured spacers, missing screws, or any other anomalies near the threaded region.	None	N/A	N/A
B3. Vent Valve Assembly a. Vent valve top retaining ring b. Vent valve bottom retaining ring	All plants 40 < years ≤ 80	Visual (VT-3) examination. The specific relevant condition is evidence of damaged or fractured retaining ring material in the flanged region of the retaining ring, evidence of missing material, or evidence that the threaded connection has failed.	None	N/A	N/A
B4. Vent Valve Assembly Original locking devices (pressure plates, spring retainers, springs, U-covers)	All plants with original vent valves 40 < years ≤ 80	Visual (VT-3) examination. The specific relevant condition is evidence of damage or wear to the U-cover; misalignment of the pressure plate with the jackscrew, U-cover, or spring retainer; damage to the pressure plate or spring retainer; or the jackscrew out of the design configuration. Other specific relevant conditions are evidence that the valve is not symmetrical in the mounting ring or the jackscrew thread extensions from the lower retaining ring threaded flange are unequal.	None	N/A	N/A

Table 5-1 (continued)
B&W plants examination acceptance and expansion criteria

Primary Item	Applicability (Note 1)	Primary Item Examination Acceptance Criteria (Notes 2,3)	Expansion Link(s)	Expansion Criteria (Note 3)	Expansion Item Examination Acceptance Criteria
B5. Vent Valve Assembly Original locking devices (key rings, pins)	All plants with original vent valves 40 < years ≤ 80	Visual (VT-3) examination. The key ring and pin are inaccessible items; therefore, the specific relevant condition is evidence that the valve is not symmetrical in the mounting ring or the jackscrew thread extensions from the lower retaining ring threaded flange are unequal.	None	N/A	N/A
B6. Vent Valve Assembly Modified locking devices (bolt crimped locking cups, jackscrew crimped locking cups, bolted blocks)	All plants with modified vent valves 40 < years ≤ 80	Visual (VT-3) examination. The specific relevant condition is evidence of fractured or missing locking cups and welds; a torn crimp or visual evidence that the crimp and sleeve slot are not aligned or engaged; or a fractured or missing bolted block. Other specific relevant conditions are missing cap screws associated with the crimped locking cups or the jackscrew thread extensions from the lower retaining ring threaded flange are unequal.	None	N/A	N/A
B7. Core Support Shield Assembly Upper core barrel (UCB) bolts	All plants 40 < years ≤ 60	Volumetric (UT) examination. The examination acceptance criteria shall be established as part of the examination technical justification.	B7.1. UTS bolts and B8.1. LTS bolts or studs and nuts B7.2. SSHT bolts (DB)	Confirmed unacceptable indications exceeding 10% of the UCB bolts (including previously failed/uninspectable bolts) is the Expansion criterion. If the Expansion criterion is met, the UT examination shall be expanded by the completion of the next refueling outage to include: *For all plants* 100% of the accessible UTS bolts and 100% of the accessible LTS bolts or studs.	The examination acceptance criteria for the examination of the expansion bolting or studs/nuts shall be established as part of the examination technical justification.

Table 5-1 (continued)
B&W plants examination acceptance and expansion criteria

Primary Item	Applicability (Note 1)	Primary Item Examination Acceptance Criteria (Notes 2,3)	Expansion Link(s)	Expansion Criteria (Note 3)	Expansion Item Examination Acceptance Criteria
B7. Core Support Shield Assembly Upper core barrel (UCB) bolts (continued)				*Additionally for DB* 100% of the accessible SSHT bolts. If the Expansion criterion is met, VT-3 examination shall be performed by the completion of the next refueling outage to include: *For all plants with LTS studs/nuts* 100% of the accessible LTS nuts.	
B7. Core Support Shield Assembly Upper core barrel (UCB) bolts	All plants 60 < years ≤ 80	Volumetric (UT) examination. The examination acceptance criteria shall be established as part of the examination technical justification.	B7.1. UTS bolts and B8.1. LTS bolts or studs and nuts	Confirmed unacceptable indications exceeding 10% of the UCB bolts (including previously failed/uninspectable bolts) is the Expansion criterion. If the Expansion criterion is met, the UT examination shall be expanded by the completion of the next refueling outage to include: 100% of the accessible UTS bolts and 100% of the accessible LTS bolts or studs.	The examination acceptance criteria for the examination of the expansion bolting or studs/nuts shall be established as part of the examination technical justification.

Table 5-1 (continued)
B&W plants examination acceptance and expansion criteria

Primary Item	Applicability (Note 1)	Primary Item Examination Acceptance Criteria (Notes 2,3)	Expansion Link(s)	Expansion Criteria (Note 3)	Expansion Item Examination Acceptance Criteria
B7. Core Support Shield Assembly Upper core barrel (UCB) bolts (continued)				If the Expansion criterion is met, the VT-3 examination shall be performed by the completion of the next refueling outage to include: *For all plants with LTS studs/nuts* 100% of the accessible LTS nuts.	
B8. Core Barrel Assembly Lower core barrel (LCB) bolts	All plants 40 < years ≤ 60	Volumetric (UT) examination. The examination acceptance criteria shall be established as part of the examination technical justification.	B7.1. UTS bolts and B8.1. LTS bolts or studs and nuts B7.2. SSHT bolts (DB only)	Confirmed unacceptable indications exceeding 10% of the LCB bolts (including previously failed/uninspectable bolts) is the Expansion criterion. If the Expansion criterion is met, the UT examination shall be expanded by the completion of the next refueling outage to include: *For all plants* 100% of the accessible UTS bolts and 100% of the accessible LTS bolts or studs. *Additionally for DB* 100% of the accessible SSHT bolts.	The examination acceptance criteria for the examination of the expansion bolting or studs/nuts shall be established as part of the examination technical justification.

Table 5-1 (continued)
B&W plants examination acceptance and expansion criteria

Primary Item	Applicability (Note 1)	Primary Item Examination Acceptance Criteria (Notes 2,3)	Expansion Link(s)	Expansion Criteria (Note 3)	Expansion Item Examination Acceptance Criteria
B8. Core Barrel Assembly Lower core barrel (LCB) bolts (continued)				If the Expansion criterion is met, the VT-3 examination shall be performed by the completion of the next refueling outage to include: *For all plants with LTS studs/nuts* 100% of the accessible LTS nuts.	
B8. Core Barrel Assembly Lower core barrel (LCB) bolts	All plants 60 < years ≤ 80	Volumetric (UT) examination. The examination acceptance criteria shall be established as part of the examination technical justification.	B7.1. UTS bolts and B8.1. LTS bolts or studs and nuts	Confirmed unacceptable indications exceeding 10% of the LCB bolts (including previously failed/uninspectable bolts) is the Expansion criterion. If the Expansion criterion is met, the UT examination shall be expanded by the completion of the next refueling outage to include: 100% of the accessible UTS bolts and 100% of the accessible LTS bolts or studs.	The examination acceptance criteria for the examination of the expansion bolting or studs/nuts shall be established as part of the examination technical justification.

Table 5-1 (continued)
B&W plants examination acceptance and expansion criteria

Primary Item	Applicability (Note 1)	Primary Item Examination Acceptance Criteria (Notes 2,3)	Expansion Link(s)	Expansion Criteria (Note 3)	Expansion Item Examination Acceptance Criteria
B8. Core Barrel Assembly Lower core barrel (LCB) bolts (continued)				If the Expansion criterion is met, the VT-3 examination shall be performed by the completion of the next refueling outage to include: *For all plants with LTS studs/nuts* 100% of the accessible LTS nuts.	
B9.Core Barrel Assembly Baffle-to-former bolts	All plants 40 < years ≤ 80	Volumetric (UT) examination. The examination acceptance criteria shall be established as part of the examination technical justification.	B9.1. Baffle-to-baffle bolts B9.2. Core barrel-to-former bolts	Confirmed unacceptable indications in greater than or equal to 5% of the baffle-to-former bolts (including previously failed bolts/uninspectable) is the Expansion criterion. The 5% Expansion criterion is based on cumulative failures over the lifetime of the plant. If the Expansion criterion is met, an evaluation of the baffle-to-baffle bolts and core barrel-to-former bolts shall be performed and submitted to the NRC within one year of expansion. The evaluation shall also assess functionality of the core barrel assembly with aging degradation of the baffle-to-baffle bolts and core barrel-to-former bolts for the purpose of determining continued operation or replacement.	N/A

Table 5-1 (continued)
B&W plants examination acceptance and expansion criteria

Primary Item	Applicability (Note 1)	Primary Item Examination Acceptance Criteria (Notes 2,3)	Expansion Link(s)	Expansion Criteria (Note 3)	Expansion Item Examination Acceptance Criteria
B10.Core Barrel Assembly Baffle plates	All plants 40 < years ≤ 60	Visual (VT-3) examination. The specific relevant condition is readily detectable cracking in the baffle plates.	B10.3. Lower grid rib section	Gross cracking (if confirmed) within one inch of one or more bolt or flow/slot hole locations in the baffle plates shall require that the VT-3 examination be expanded by the completion of the next refueling outage to include 100% of the accessible portions of the lower grid rib section heat-affected zones adjacent to the IMI guide tube spider-to-lower grid rib section welds.	The specific relevant condition is readily detectable cracking in the lower grid rib section.
B10. Core Barrel Assembly Baffle plates	All plants 60 < years ≤ 80	Visual (VT-3) examination. The specific relevant condition is readily detectable cracking in the baffle plates.	B10.2. Former plates	Gross cracking (if confirmed) within one inch of a bolt or flow/slot hole location in the baffle plates shall require an evaluation of the former plates for the purpose of determining continued operation or repair/replacement shall be submitted to the NRC within one year of expansion. Alternatively, repair/replacement activities may be initiated based on results of a best effort former plate examination.	N/A

Table 5-1 (continued)
B&W plants examination acceptance and expansion criteria

Primary Item	Applicability (Note 1)	Primary Item Examination Acceptance Criteria (Notes 2,3)	Expansion Link(s)	Expansion Criteria (Note 3)	Expansion Item Examination Acceptance Criteria
B11. Core Barrel Assembly Locking devices, including locking welds, for the baffle-to-former bolts and internal baffle-to-baffle bolts	All plants 40 < years ≤ 80	Visual (VT-3) examination. The specific relevant condition is evidence of broken, separated, or missing bolt locking devices or welds.	B11.1. Locking devices, including locking welds, for the external baffle-to-baffle bolts and core barrel-to-former bolts	Confirmed relevant aging degradation conditions in greater than or equal to 1% of the baffle-to-former and internal baffle-to-baffle bolt locking devices and locking welds (including those previously failed/uninspectable) shall require an evaluation of the external baffle-to-baffle and core barrel-to-former bolt locking devices and welds for the purpose of determining continued operation or replacement shall be submitted to the NRC within one year of expansion.	N/A
B19. Core Barrel Assembly Surveillance specimen holder tube (SSHT) bolts and their locking devices	DB 60 < years ≤ 80	1) Volumetric (UT) examination. The examination acceptance criteria shall be established as part of the examination technical justification. 2) Visual (VT-3) examination. The specific relevant condition is loss of material, damaged or distorted or missing bolt locking devices or welds.	None	N/A	N/A
B16. Core Barrel Assembly Core barrel cylinder top flange circumferential weld HAZ	Note 4 40 < years ≤ 80	Enhanced visual (EVT-1), volumetric (UT), or eddy current (ECT) examination. The specific relevant condition is a detectable cracklike surface indication.	None	None	None

Table 5-1 (continued)
B&W plants examination acceptance and expansion criteria

Primary Item	Applicability (Note 1)	Primary Item Examination Acceptance Criteria (Notes 2,3)	Expansion Link(s)	Expansion Criteria (Note 3)	Expansion Item Examination Acceptance Criteria
B17. Core Barrel Assembly Core barrel top and bottom cylinders center circumferential weld regions	Note 5 60 < years ≤ 80	Enhanced visual (EVT-1), volumetric (UT), or eddy current (ECT) examination. The specific relevant condition is a detectable cracklike surface indication.	None	None	None
B20. Core Barrel Assembly Core barrel cylinder top flange circumferential weld regions	All plants 60 < years ≤ 80 (Note 6)	Enhanced visual (EVT-1), volumetric (UT), or eddy current (ECT) examination. The specific relevant condition is a detectable cracklike surface indication.	B20.1. Plenum cover weldment ribs to each other welds B20.2. Core support shield cylinder top flange	Confirmed evidence of relevant conditions at one or more locations shall require that examination be expanded to include an EVT-1 examination of B20.1. and B20.2. by the completion of the next refueling outage.	The specific relevant condition is a detectable cracklike surface indication.
B13. Lower Grid Assembly Alloy X-750 dowel-to-guide block weld	All plants (except DB) 40 < years ≤ 80	Visual (VT-3) examination. The specific relevant condition is separated or missing locking welds, or missing dowels.	Alloy X-750 dowels to B13.1. upper and B13.2. lower grid fuel assembly support pad welds	Confirmed evidence of relevant conditions at two or more locations shall require that the VT-3 examination be expanded to include 100% of the Alloy X-750 dowel locking welds to the upper and lower grid fuel assembly support pads by the completion of the next refueling outage.	The specific relevant condition is separated or missing locking welds, or missing dowels.
B21. Lower Grid Assembly Alloy X-750 dowels-to-lower grid fuel assembly support pad welds	DB 40 < years ≤ 80	Visual (VT-3) examination. The specific relevant condition is separated or missing locking welds, or missing dowels.	B13.1. Alloy X-750 dowels-to-upper grid fuel assembly support pad welds	Confirmed evidence of relevant conditions at two or more locations shall require that the VT-3 examination be expanded to include 100% of the Alloy X-750 dowel locking welds to the upper grid fuel assembly support pads by the completion of the next refueling outage.	The specific relevant condition is separated or missing locking welds, or missing dowels.

Table 5-1 (continued)
B&W plants examination acceptance and expansion criteria

Primary Item	Applicability (Note 1)	Primary Item Examination Acceptance Criteria (Notes 2,3)	Expansion Link(s)	Expansion Criteria (Note 3)	Expansion Item Examination Acceptance Criteria
B18. Lower Grid Assembly Lower grid rib section	All plants 60 < years ≤ 80	Visual (VT-3) examination. The specific relevant condition is readily detectable cracking in the lower grid rib section.	None	N/A	N/A
B12. Flow Distributor Assembly Flow distributor (FD) bolts	All plants 40 < years ≤ 60	Volumetric (UT) examination The examination acceptance criteria shall be established as part of the examination technical justification.	B7.1. UTS bolts and B8.1. LTS bolts or studs and nuts B7.2. SSHT bolts (DB only)	Confirmed unacceptable indications exceeding 10% of the FD bolts (including previously failed/uninspectable bolts) is the Expansion criterion. If the Expansion criterion is met, the UT examination shall be expanded by the completion of the next refueling outage to include: *For all plants* 100% of the accessible UTS bolts and 100% of the accessible LTS bolts or studs. *Additionally for DB* 100% of the accessible SSHT bolts. If the Expansion criterion is met, the VT-3 examination shall be performed by the completion of the next refueling outage to include: *For all plants with LTS studs/nuts* 100% of the accessible LTS nuts.	The examination acceptance criteria for the examination of the expansion bolting or studs/nuts shall be established as part of the examination technical justification.

Table 5-1 (continued)
B&W plants examination acceptance and expansion criteria

Primary Item	Applicability (Note 1)	Primary Item Examination Acceptance Criteria (Notes 2,3)	Expansion Link(s)	Expansion Criteria (Note 3)	Expansion Item Examination Acceptance Criteria
B12. Flow Distributor Assembly Flow distributor (FD) bolts	All plants 60 < years ≤ 80	Volumetric (UT) examination. The examination acceptance criteria shall be established as part of the examination technical justification.	B7.1. UTS bolts and B8.1. LTS bolts or studs and nuts	Confirmed unacceptable indications exceeding 10% of the FD bolts (including previously failed/uninspectable bolts) is the Expansion criterion. If the Expansion criterion is met, the UT examination shall be expanded by the completion of the next refueling outage to include: 100% of the accessible UTS bolts and 100% of the accessible LTS bolts or studs. If the Expansion criterion is met, the VT-3 examination shall be performed by the completion of the next refueling outage to include: *For all plants with LTS studs/nuts* 100% of the accessible LTS nuts.	The examination acceptance criteria for the examination of the expansion bolting or studs/nuts shall be established as part of the examination technical justification.

Table 5-1 (continued)
B&W plants examination acceptance and expansion criteria

Primary Item	Applicability (Note 1)	Primary Item Examination Acceptance Criteria (Notes 2,3)	Expansion Link(s)	Expansion Criteria (Note 3)	Expansion Item Examination Acceptance Criteria
B15. In-Core Monitoring Instrumentation (IMI) Guide Tube Assembly a. IMI guide tube spiders b. IMI guide tube spider-to-lower grid rib section welds	All plants 40 < years ≤ 60	1) Visual (VT-3) examination. The specific relevant conditions for the IMI guide tube spiders are fractured or missing spider arms or a spider arm that does not align with the lower grid fuel assembly support pad screw (as viewed from the top). 2) Visual (VT-3) examination. The specific relevant conditions for the IMI spider-to-lower grid rib section welds are separated or missing welds.	B15.1. Lower grid fuel assembly support pad items: pad, pad-to-rib section welds, Alloy X-750 dowel, cap screw, and their locking welds	Confirmed evidence of relevant conditions at two or more IMI guide tube spider locations or IMI guide tube spider-to-lower grid rib section welds shall require that the VT-3 examination be expanded to include accessible surfaces of the pads, dowels, and cap screws for 100% of the lower grid fuel assembly support pads by the completion of the next refueling outage.	The specific relevant conditions are separated or missing welds, missing support pads, dowels, cap screws and locking welds, or misalignment of the support pads.
B15. In-Core Monitoring Instrumentation (IMI) Guide Tube Assembly a. IMI guide tube spiders b. IMI guide tube spider-to-lower grid rib section welds	All plants 60 < years ≤ 80	1) Visual (VT-3) examination. The specific relevant conditions for the IMI guide tube spiders are fractured or missing spider arms or a spider arm that does not align with the lower grid fuel assembly support pad screw (as viewed from the top). 2) Visual (VT-3) examination. The specific relevant conditions for the IMI spider-to-lower grid rib section welds are separated or missing welds.	B15.1. Lower grid fuel assembly support pad items: pad, pad-to-rib section welds, Alloy X-750 dowels, cap screw, and their locking welds B15.2. Upper grid fuel assembly support pad items: pad, Alloy X-750 dowels, cap screws, and their locking welds	Confirmed evidence of relevant conditions at two or more IMI guide tube spider locations or IMI guide tube spider-to-lower grid rib section welds shall require that the VT-3 examination be expanded to include accessible surfaces of the pads, dowels, cap screws, and associated welds for 100% of the lower grid fuel assembly support pads by the completion of the next refueling outage. Confirmed evidence of relevant conditions at two or more accessible surfaces of the pads, dowels, cap screws, and associated welds for	The specific relevant conditions are separated or missing welds, missing support pads, dowels, cap screws and locking welds, or misalignment of the support pads.

Table 5-1 (continued)
B&W plants examination acceptance and expansion criteria

Primary Item	Applicability (Note 1)	Primary Item Examination Acceptance Criteria (Notes 2,3)	Expansion Link(s)	Expansion Criteria (Note 3)	Expansion Item Examination Acceptance Criteria
B15. In-Core Monitoring Instrumentation (IMI) Guide Tube Assembly a. IMI guide tube spiders b. IMI guide tube spider-to-lower grid rib section welds (continued)				100% of the lower grid fuel assembly support pads shall require that the VT-3 examination be expanded to include accessible surfaces of the pads, dowels, cap screws, and associated welds for 100% of the upper grid fuel assembly support pads by the completion of the next refueling outage.	

Notes:

1. Applicability in this column is both for plant and renewed licensing period, as noted.
2. The examination acceptance criterion for visual examination is the absence of the specified relevant condition(s).
3. Refer to MRP-231 [15] Section 3.3 for additional details on examination acceptance and expansion criteria.
4. Applicable to plants that have had weld repairs performed in their top flange circumferential weld after the stress relief treatment.
5. Applicable to plants that have had weld repairs performed in their center circumferential weld after the stress relief treatment.
6. The following note is contained in Section 3.2, Item H, of MRP-189, Rev. 3 [10] regarding the fatigue ranking analysis used to perform the preliminary categorization with respect to fatigue:

   Note: The PWR internals fatigue ranking analysis performed was specific to ONS-1, ONS-2, and ONS-3 but is considered representative for the B&W design. However, a plant-specific analysis is required to validate applicability to a given non-ONS plant when implementing this revision of MRP-189 or the associated downstream reports.

Table 5-2
CE plants examination acceptance and expansion criteria

Primary Item	Applicability	Examination Acceptance Criteria (Note 1)	Expansion Link(s)	Expansion Criteria	Expansion Item Examination Acceptance Criteria
C2. Core Shroud Assembly (Welded) Core shroud plate-former plate weld	Plant designs with core shrouds assembled in two vertical sections	Visual (EVT-1) examination. The specific relevant condition is a detectable cracklike surface indication.	C2.1. Remaining axial welds	Confirmation that a surface-breaking indication greater than 2 in. (5.08 cm) in length has been detected and sized in the core shroud plate-former plate weld at the core shroud re-entrant corners (as visible from the core side of the shroud), within 6 inches of the central flange and horizontal stiffeners, shall require inspection of all remaining axial welds by the completion of the next refueling outage.	The specific relevant condition is a detectable cracklike surface indication.
C3. Core Shroud Assembly (Welded) Shroud plates	Only plants with welded core shrouds assembled with full-height shroud plates	Visual (EVT-1) examination. The specific relevant condition is a detectable cracklike surface indication.	C3.1. Remaining axial welds	Confirmation that a surface-breaking indication greater than 2 in. (5.08 cm) in length has been detected and sized in the axial weld seams at the core shroud re-entrant corners at the core mid-plane shall require inspection of all remaining axial welds by the completion of the next refueling outage.	The specific relevant condition is a detectable cracklike surface indication.
C4a. Core Shroud Assembly (Welded) Assembly	Plant designs with core shrouds assembled in two vertical sections	Visual (VT-1) examination. The specific relevant condition is evidence of physical separation between the upper and lower core shroud sections.	None	N/A	N/A

Table 5-2 (continued)
CE plants examination acceptance and expansion criteria

Primary Item	Applicability	Examination Acceptance Criteria (Note 1)	Expansion Link(s)	Expansion Criteria	Expansion Item Examination Acceptance Criteria
C5. Core Support Barrel Assembly Upper Flange Weld (UFW)	All plants	Visual (EVT-1), volumetric (UT), or eddy current (ET) examination. The specific relevant condition is a detectable cracklike surface indication.	C5.2. Upper girth weld (UGW) C5.1. Lower girth weld (LGW) C5.3. Upper axial weld (UAW) C5.4. Lower core support beams C5.5. CSB flexure weld (CSBFW)	*Core support barrel welds*: The confirmed detection and sizing of a surface-breaking indication with a length greater than 2 in. (5.08 cm) in the UFW shall require that the inspection be expanded to include the UGW, LGW, and UAW by the completion of the next refueling outage. *Lower core support beams:* The confirmed detection and sizing of a surface-breaking indication with a length greater than 2 in. (5.08 cm) in the UFW shall require inspection of the lower core support beams within the next three refueling outages. *CSBFW*: The confirmed detection and sizing of a surface-breaking indication with a length greater than 2 in. (5.08 cm) in the UFW shall require that the inspection be expanded to include the CSBFW within the next three fuel cycles.	*All components*: The specific relevant condition is a detectable cracklike surface indication.

Table 5-2 (continued)
CE plants examination acceptance and expansion criteria

Primary Item	Applicability	Examination Acceptance Criteria (Note 1)	Expansion Link(s)	Expansion Criteria	Expansion Item Examination Acceptance Criteria
C6. Core Support Barrel Assembly Middle girth weld (MGW)	All plants	Visual (EVT-1), volumetric (UT), or eddy current (ET) examination. The specific relevant condition is a detectable cracklike surface indication.	C6.1. Middle axial weld (MAW) C6.2. Lower axial weld (LAW) C6.3. Core support columns C6.4. Fuel alignment plate (applicable only after entering SLR period)	*Core support barrel welds*: The confirmed detection and sizing of a surface-breaking indication with a length greater than 2 in. (5.08 cm) in the MGW shall require that the inspection be expanded to include the MAW and LAW by the completion of the next refueling outage. *Core support columns*: Plants with core shrouds assembled in two vertical sections: The confirmed detection of a surface-breaking linear indication in the MGW shall require examination of 25% (of the total of both visible and nonvisible as seen from above the core support plate) of the core support column assemblies by the completion of the next refueling outage. The confirmed detection of a relevant disruption of discontinuity in the surface of a core support column weld shall require examination of 100% of the accessible uninspected core support column welds from the top side of the core support plate (minimum of 75% of the total population of core support column welds) during the same outage. *Fuel alignment plate*: The confirmed detection and sizing of a surface-breaking indication with a length greater than 2 in. (5.08 cm) in the MGW shall require that the inspection be expanded to include the fuel alignment plate by the completion of the next refueling outage (if plant has entered the SLR period).	*Core barrel welds*: The specific relevant condition for the expansion lower cylinder axial welds is a detectable cracklike surface indication. *Core support columns*: The specific relevant condition for the core support column welds is a disruption or discontinuity in the surface of the weld. The specific relevant condition for the core support columns viewed from above the core support plate is missing or separated welds, or fractured, misaligned, or missing columns. *Fuel alignment plate*: The specific relevant condition for the fuel alignment plate inspection is deformed ligaments, broken ligaments, and cracking visible to a general visual (VT-3) inspection.

Table 5-2 (continued)
CE plants examination acceptance and expansion criteria

Primary Item	Applicability	Examination Acceptance Criteria (Note 1)	Expansion Link(s)	Expansion Criteria	Expansion Item Examination Acceptance Criteria
C7. Core Support Barrel Assembly CSB flexure weld (CSBFW)	All plants with welded core shrouds	Visual (EVT-1), volumetric (UT), or eddy current (ET) examination. The specific relevant condition is a detectable crack-like indication.	None	N/A	N/A
C9. Lower Support Structure Core support plate	All plants with a core support plate	Visual (EVT-1) examination. The specific relevant condition is a detectable crack-like surface indication.	None	N/A	N/A
C10. Upper Internals Assembly Fuel alignment plate	Only plants with welded core shrouds assembled with full-height shroud plates	Visual (EVT-1) examination. The specific relevant condition is a detectable crack-like surface indication.	None	N/A	N/A
C11. Control Element Assembly Instrument guide tubes and supports	All plants with instrument guide tubes in the CEA shroud assembly	Visual (VT-3) examination. The specific relevant conditions are missing supports or separation at the welded joint between the tubes and the supports.	C11.1. Remaining instrument guide tubes and supports within the CEA shroud assemblies	Confirmed evidence of missing supports or separation at the welded joint between the tubes and supports shall require the inspection coverage to be expanded to the remaining instrument tubes within the CEA shroud assemblies by completion of the next refueling outage.	The specific relevant conditions are missing supports or separation at the welded joint between the tubes and the supports.
C12. Lower Support Structure Deep beams	Only plants with welded core shrouds assembled with full-height shroud plates	Visual (EVT-1) examination. The specific relevant condition is a detectable crack-like indication.	Remaining deep beams	Confirmed evidence of a detectable cracklike indication in one or more of the deep beams examined in the 25% population selected for the Primary component inspection shall require the inspection coverage to be expanded to the remaining deep beams by the completion of the next refueling outage.	The specific relevant condition is a detectable cracklike indication.

Table 5-2 (continued)
CE plants examination acceptance and expansion criteria

Primary Item	Applicability	Examination Acceptance Criteria (Note 1)	Expansion Link(s)	Expansion Criteria	Expansion Item Examination Acceptance Criteria
C18. Core Shroud Assembly (Welded) Core shroud tie rods and nuts	All plants with core shroud tie rods	Nonqualified visual inspection. The specific relevant conditions include broken locking tabs, missing nuts, displaced tie rods, or evidence of wear.	None	N/A	N/A
C19. CEA Shroud Assemblies CEA shroud bolts	All plants with CEA shroud bolts	Volumetric (UT) examination. The examination acceptance criteria for the UT of the CEA shroud bolts shall be established as part of the examination technical justification.	None	N/A	N/A

Note:
1. The examination acceptance criterion for visual examination is the absence of the specified relevant condition(s).

Table 5-3
Westinghouse plants examination acceptance and expansion criteria

Primary Item	Applicability	Examination Acceptance Criteria (Note 1)	Expansion Link(s)	Expansion Criteria	Expansion Item Examination Acceptance Criteria
W2. Control Rod Guide Tube Assembly Lower flange welds	All plants	Enhanced visual (EVT-1) examination. The specific relevant condition is a detectable cracklike surface indication.	W2.1. Remaining CRGT lower flange welds W2.2. Bottom-mounted instrumentation (BMI) column bodies	Confirmation of surface-breaking indications in two or more CRGT lower flange welds shall require visual (EVT-1) examination of the remaining CRGT lower flange welds at locations with control rods and visual (VT-3) examination of BMI column bodies by the completion of the next refueling outage.	For BMI column bodies, the specific relevant condition for the VT-3 examination is completely fractured column bodies.
W3. Core Barrel Assembly Upper flange weld (UFW)	All plants	Periodic enhanced visual (EVT-1), volumetric (UT), or surface (ET) examination. The specific relevant condition is a detectable cracklike surface indication.	W3.1. Upper girth weld (UGW) W3.3. Lower flange weld (LFW) (Note 2) W3.2. Upper axial welds (UAW) (secondary expansion of W3.1. UGW or W3.3. LFW) W3.4. Lower support forging/casting (secondary expansion of W3.3. LFW)	*UGW and LFW*: The confirmed detection and sizing of a surface-breaking indication with a length greater than 2 in. (5.08 cm) in the UFW shall require that the inspection be expanded to include the UGW and LFW by the completion of the next refueling outage. *UAW (secondary expansion of UGW or LFW)*: The confirmed detection and sizing of a surface-breaking indication with a length greater than 2 in. (5.08 cm) in either the UGW or LFW shall require that the inspection be expanded to include the UAW by the completion of the next refueling outage. *Lower support forging/casting (secondary expansion of LFW)*: The confirmed detection of a surface-breaking indication with a length greater than 2 in. (5.08 cm) in the LFW shall require the inspection of the lower support forging or casting (25% of the non-core side surface) within the next three refueling outages. If an indication is found in this inspection of the lower support forging or casting, the examination coverage shall be expanded to 100% of the accessible surface of the non-core side surface of the lower support forging or casting during the same refueling outage.	The specific relevant condition for the expansion core barrel welds (UGW, LFW, UAW) and lower support forging or casting examinations is a detectable cracklike surface indication.

Table 5-3 (continued)
Westinghouse plants examination acceptance and expansion criteria

Primary Item	Applicability	Examination Acceptance Criteria (Note 1)	Expansion Link(s)	Expansion Criteria	Expansion Item Examination Acceptance Criteria
W4. Core Barrel Assembly Lower girth weld (LGW)	All plants	Periodic enhanced visual (EVT-1), volumetric (UT), or surface (ET) examination. The specific relevant condition is a detectable cracklike surface indication.	W4.1. Upper core plate W4.4. Lower support column bodies (cast and non-cast) W4.2. Middle axial welds (MAW) W4.3. Lower axial welds (LAW)	*Upper core plate*: The confirmed detection and sizing of a surface-breaking indication with a length greater than 2 in. (5.08 cm) in the LGW shall require inspection of the upper core plate (25% of the core-side surface) within the next three refueling outages. If an indication is found in this inspection of the upper core plate, the examination coverage shall be expanded to 100% of the accessible surface of the core-side surface of the upper core plate during the same refueling outage. *Lower support column bodies*: The confirmed detection and sizing of a surface-breaking indication with a length greater than 2 in. (5.08 cm) in the LGW shall require inspection of the lower support column bodies (cast and non-cast) within the next three refueling outages. The confirmed detection of fractured, misaligned, or missing lower support columns shall require examination of 100% of the accessible uninspected lower support column assemblies using a VT-3 examination from above the lower core plate (minimum of 75% of the total population of lower support column assemblies) during the same outage. *MAW and LAW*: The confirmed detection and sizing of a surface-breaking indication with a length greater than 2 in. (5.08 cm) in the LGW shall require that the inspections be expanded to include the lower core barrel cylinder axial welds by the completion of the next refueling outage.	*Upper core plate*: The specific relevant conditions for the inspection of the upper core plate are broken or missing parts of the plate. *Lower support column bodies*: The specific relevant conditions for the inspection of the lower support column bodies (cast and non-cast) are fractured, misaligned, or missing columns. *MAW and LAW*: The specific relevant condition for the expansion MAW and LAW inspections is a detectable cracklike surface indication.

Table 5-3 (continued)
Westinghouse plants examination acceptance and expansion criteria

Primary Item	Applicability	Examination Acceptance Criteria (Note 1)	Expansion Link(s)	Expansion Criteria	Expansion Item Examination Acceptance Criteria
W5. Baffle-Former Assembly Baffle-edge bolts	All plants with baffle-edge bolts	Visual (VT-3) examination. The specific relevant conditions are missing or broken locking devices, cracked/failed or missing bolts, and protrusion of bolt heads.	None	N/A	N/A
W6. Baffle-Former Assembly Baffle-former bolts	All plants	Volumetric (UT) examination. The examination acceptance criteria for the UT of the baffle-former bolts shall be established as part of the examination technical justification.	W6.2. Lower support column bolts W6.1. Barrel-former bolts (secondary expansion of W6.2. Lower support column bolts if large clusters of degraded baffle-former bolts are not detected)	*Lower support column bolts*: Confirmation that more than 5% of the baffle-former bolts actually examined on the four baffle plates at the largest distance from the core (presumed to be the lowest dose locations) contain unacceptable indications shall require inspection of the lower support column bolts within the next three fuel cycles. *Barrel-former bolts (secondary expansion of Lower support column bolts)*: Confirmation that more than 5% of the lower support column bolts actually examined contain unacceptable indications shall require UT inspection of the barrel-former bolts within three refueling cycles. *Barrel-former bolts (after large clusters of degraded baffle-former bolts are detected)*: Confirmation of the presence of a large cluster of degraded baffle-former bolts (Note 3) shall require visual VT-3 inspection of the barrel-former bolts adjacent to the cluster of failed baffle-former bolts (Note 4) within three refueling cycles.	*Lower support column bolts and barrel-former bolts (UT)*: The examination acceptance criteria for the UT of the lower support column bolts and the barrel-former bolts shall be established as part of the examination technical justification. *Barrel-former bolts (VT-3)*: The specific relevant conditions for the visual VT-3 inspection of the barrel-former bolts are missing bolts or lock bars, protruding bolts or lock bars, and visibly cracked bolts, lock bars, or lock bar welds.

Table 5-3 (continued)
Westinghouse plants examination acceptance and expansion criteria

Primary Item	Applicability	Examination Acceptance Criteria (Note 1)	Expansion Link(s)	Expansion Criteria	Expansion Item Examination Acceptance Criteria
W7. Baffle-Former Assembly Assembly (Includes baffle plates, bracket bolts (if applicable), corner bolts (if applicable), and indirect effects of void swelling in former plates)	All plants	Visual (VT-3) examination. The specific relevant conditions are evidence of abnormal interaction with fuel assemblies, gaps along high fluence baffle plate joints, vertical displacement of baffle plates near high fluence joints, or more than two broken or damaged bolt locking systems near high fluence baffle plate joints.	None	N/A	N/A
W8. Alignment and Interfacing Components Internals hold-down spring	All plants with 304 stainless steel hold-down springs	Direct physical measurement of spring height. The examination acceptance criterion for this measurement is that the remaining compressible height of the spring shall provide hold-down forces within the plant-specific design tolerance.	None	N/A	N/A
W9. Thermal Shield Assembly Thermal shield flexures	All plants with thermal shields	Visual (VT-3) examination. The specific relevant conditions for thermal shield flexures are cracking which indicates or could result in complete separation.	None	N/A	N/A

Notes:
1. The examination acceptance criterion for visual examination is the absence of the specified relevant condition(s).
2. The lower core barrel flange weld may alternatively be designated as the core barrel-to-support plate weld in some Westinghouse plant designs.
3. A large cluster of degraded baffle-former bolts is defined as any group of adjacent baffle-former bolts at least 3 rows high by at least 10 columns wide, or at least 4 rows high by at least 6 columns wide where 80% or greater of the baffle-former-bolts have unacceptable UT indications or are visibly degraded [48].
4. The barrel-former bolts adjacent to the cluster include the following [48]:
   a. Barrel-former bolts in the same area as the cluster of baffle-former bolts with indications if that area is projected radially onto the core barrel
   b. Barrel-former bolts on the two rows above and the two rows below the projected area
   c. Barrel-former bolts on each of the two columns of bolts that are circumferentially adjacent to the projected area

5.1 Examination Acceptance Criteria

5.1.1 Visual (VT-3) Examination

Visual (VT-3) examination has been determined to be an appropriate NDE method for the detection of general degradation conditions in many of the susceptible components. ASME Code Section XI, Examination Category B-N-3 [2], provides a set of relevant conditions for the visual (VT-3) examination of removable core support structures in IWB-3520.2, as follows:

- Structural distortion or displacement of parts to the extent that component function may be impaired
- Loose, missing, cracked, or fractured parts, bolting, or fasteners
- Corrosion or erosion that reduces the nominal section thickness by more than 5%
- Wear of mating surfaces that may lead to loss of function
- Structural degradation of interior attachments such that the original cross-sectional area is reduced more than 5%

For components in the Existing Programs group, these general relevant conditions are sufficient. However, for components for which visual (VT-3) is specified in the Primary or the Expansion group, more specific descriptions of the relevant conditions are provided in Table 5-1, Table 5-2, and Table 5-3 for the benefit of the examiners. Typical examples are "fractured material" and "separated material." One or more of these specific relevant condition descriptions may be applicable to the Primary and Expansion components listed in Table 5-1, Table 5-2, and Table 5-3.

The examination acceptance criterion for components requiring visual (VT-3) examination is thus the absence of the relevant condition(s) specified in Table 5-1, Table 5-2, and Table 5-3.

The disposition can include a supplementary examination to further characterize the relevant condition, an engineering evaluation to show that the component is capable of continued operation with a known relevant condition, or repair/replacement to remediate the relevant condition.

5.1.2 Visual (VT-1) Examination

Visual (VT-1) examination is defined in ASME Code Section XI [2] as an examination "conducted to detect discontinuities and imperfections on the surface of components, including such conditions as cracks, wear, corrosion, or erosion." For these guidelines, VT-1 has been selected only to detect distortion as evidenced by small gaps between the upper-to-lower mating surfaces of CE welded core shrouds assembled in two vertical sections.

The examination acceptance criterion is thus the absence of the relevant condition of gaps that would be indicative of distortion from void swelling.

5.1.3 Enhanced Visual (EVT-1) Examination

Enhanced visual (EVT-1) examination has the same requirements as the ASME Code Section XI [2] visual (VT-1) examination, with additional requirements given in the Inspection Standard [3]. These enhancements are intended to improve the detection and characterization of discontinuities, taking into account the remote visual aspect of PWR internals examinations. As a result, EVT-1 examinations are capable of detecting small surface-breaking cracks and surface crack length sizing when used in conjunction with sizing aids (for example, landmarks, ruler, and tape measure). EVT-1 examination has been selected to be an appropriate NDE method for detection of cracking in plates or their welded joints. Thus, the relevant condition applied for EVT-1 examination is the same as found for cracking [2], which is cracklike surface-breaking indications.

Therefore, until such time as generic engineering studies develop the basis by which a quantitative amount of degradation can be shown to be tolerable for the specific component, any relevant condition is to be dispositioned. In the interim, the examination acceptance criterion is thus the absence of any detectable surface-breaking indication.

5.1.4 Nonqualified Visual Inspection

The EVT-1, VT-1, and VT-3 inspections have detailed quality requirements, which include a need for special equipment and trained and qualified inspectors (see MRP-228 for additional information [3]). Many plants do not have personnel or equipment on site meeting these qualifications and requirements, but they do typically have the ability to perform nonqualified visual inspections as part of maintenance or foreign object search and retrieval operations. These nonqualified visual inspections are capable of detecting loose parts and the effects of substantial degradation in the internals [24]. The relevant conditions for a nonqualified visual inspection would be specific to the particular component and expected degradation effect. For the core shroud tie rods and nuts, as an example, the examination acceptance criterion would be detection of broken, displaced, or missing tie rods or nuts. These nonqualified visual inspections are to be the equivalent of the foreign object search and retrieval inspections performed regularly at each plant.

5.1.5 Surface Examination

Surface ET (eddy current) examination is specified as an alternative or as a supplement to visual examinations. No specific acceptance criteria for surface (ET) examination of PWR internals locations are provided in ASME Code Section XI [2]. Because surface ET is employed as a signal-based examination, a technical justification according to the Inspection Standard [3] provides the basis for detection and length sizing of surface-

breaking or near-surface cracks. The signal-based relevant indication for surface (ET) examination is thus the same as the relevant condition for enhanced visual (EVT-1) examination. The acceptance criteria for enhanced visual (EVT-1) examinations in Section 5.1.3 (and accompanying entries in Table 5-1, Table 5-2, and Table 5-3) are therefore applied when this method is used as an alternative or supplement to visual examination.

5.1.6 Volumetric Examination

The intent of volumetric examinations specified for bolts or pins in Section 4.3 of these I&E guidelines is to detect planar defects. No flaw-sizing measurements are recorded or assumed in the acceptance or rejection of individual bolts or pins. Individual bolts or pins are dispositioned based on the detection of relevant indications established as part of the examination technical justification. When a relevant indication is detected in the cross-sectional area of the bolt or pin, it is assumed to be nonfunctional and the indication is recorded. A bolt or pin that passes the criterion of the examination is assumed to be functional.

Because of this pass/fail acceptance of individual bolts or pins, the examination acceptance criterion for volumetric (UT) examination of bolts and pins is based on a reliable detection of indications as established by the individual technical justification for the proposed examination. This is in keeping with current industry practice. For example, planar flaws on the order of 30% of the cross-sectional area have been demonstrated to be reliably detectable in previous bolt NDE technical justifications for baffle-former bolting. Requirements for developing technical justifications of volumetric (UT) examinations of bolts are provided in the inspection standard, MRP-228 [3].

Bolted and pinned assemblies are evaluated for acceptance based on meeting a specified number and distribution of functional bolts and pins. Evaluation options are discussed in Section 6.

Volumetric (UT) examination is also specified as an alternative or as a supplement to visual examinations for cracking in certain welded components. Because volumetric (UT) examinations employ a signal-based examination, a technical justification according to the Inspection Standard [3] provides the basis for detection and length sizing of cracks in these components. The signal-based relevant indication for volumetric (UT) examination is thus the same as the relevant condition for enhanced visual (EVT-1) examination. The acceptance criteria for enhanced visual (EVT-1) examinations in Section 5.1.3 (and accompanying entries in Table 5-1, Table 5-2, and Table 5-3) are therefore applied when this method is used as an alternative or supplement to visual examination.

5.2 Physical Measurements Examination Acceptance Criteria

Continued functionality can be confirmed by physical measurements in which, for example, loss of material caused by wear, loss of preload of clamping force caused by various degradation mechanisms, or distortion/deflection caused by void swelling may occur. When appropriate, these physical measurements are described in Section 4.2.6, with limits or tolerances applicable to the various designs. These measurements are to be compared with established limits or tolerances that are defined within a reasonable period of time prior to the measurements being taken. Satisfaction of limits on these physical measurements is intended to demonstrate that the affected components remain functional or they can continue in service for a determined period until the next set of physical measurements. If the limits are exceeded, it is recognized that the component(s) may still be acceptable as is, but corrective action or evaluation for continued service is still required.

For B&W designs, the acceptable tolerance for the measured differential height from the top of the plenum rib pads to the vessel seating surface has been generically established and is provided in Table 5-1. For Westinghouse designs, tolerances are available on a design or plant-specific basis and thus are not provided generically in these guidelines. For CE designs, no physical measurements are specified.

5.3 Expansion Criteria

The criteria for expanding the scope of examination from the Primary components to their linked Expansion components are contained in Table 5-1, Table 5-2, and Table 5-3 for B&W, CE, and Westinghouse plants, respectively. These were originally solidified for earlier revisions of the I&E guidelines through an expert panel process [20] and have been updated as required by later revisions of the guidelines.

Section 6: Evaluation Methodologies

Various options are available for the disposition of conditions detected during examinations (Section 4) that are unable to satisfy the examination acceptance criteria (Section 5). These options include, but are not limited to, supplemental examinations, such as a surface examination to supplement a visual (VT-1) or an enhanced visual (EVT-1) examination, to further characterize and potentially dispose of a detected condition; engineering evaluation that demonstrates the acceptability of a detected condition; repair to restore a component with a detected condition to acceptable status; or replacement of a component with an unacceptable detected condition.

The first option involves the reexamination of a component with an unacceptable detected condition with an alternative examination method that has the potential capability to further define or confirm the component physical condition with greater precision. This additional characterization may enable the more precise character of that detected condition to be found acceptable for continued service. An example would be the volumetric (UT) examination to depth-size a surface-breaking flaw detected by either visual (VT-1) or enhanced visual (EVT-1) examination.

The second option involves performing engineering evaluations. Acceptable methodologies range from the satisfaction of limit load requirements for the internals assembly or component cross section to the satisfaction of flaw stability requirements using either linear elastic fracture mechanics (LEFM) or elastic-plastic fracture mechanics (EPFM), depending on applicability. The evaluation process depends on the loading applied to the component, assembly, or system. In addition, flaw depth assumptions, in the absence of flaw depth sizing during examination and flaw growth assumptions for subsequent operation until the next examination, must be considered. Justification for flaw evaluation fracture toughness limits must also be considered. This justification should include consideration of the potential impact of aging (for example, thermal and irradiation embrittlement) on fracture toughness and flaw growth. In the report MRP-210, EPRI developed an assessment of the fracture toughness of irradiated stainless steel for BWR core shrouds [26, 29]. There is also some information related to fracture toughness data and models in various technical reports and industry literature [26–31, 36], including the EPRI report MRP-211 [32]. EPRI also developed IASCC crack growth rate (CGR) models for both PWR and BWR internals [38], which have been incorporated into Code Case N-889 [39]; these CGR models can be used in PWR internals evaluations. Design-specific or fleet-specific flaw

handbooks may be used as an engineering evaluation tool. The NRC-approved report WCAP-17096-NP-A [33] provides approved methods for evaluating examination results that do not meet the examination acceptance criteria in Section 5. The WCAP-17096-NP-A methods are an acceptable option for evaluating detected degradation in accordance with the Needed requirement of Section 7.5.

Other approaches to address conditions detected during inspections include repair, such as mechanical repairs or repairs using welding methods, or replacement, such as installing new bolts or replacing an entire internals assembly. It is recognized that implementation of these options is controlled by owner-specific and OEM-specific processes. Appendix C provides guidance for evaluating the impact of replacements or repairs on a plant's internals aging management program. The aging management program must continue to address Primary–Expansion component relationships, manage all eight of the aging-related degradation mechanisms for the various types of internals components, and address relevant operating experience.

Welding repairs present a problem specific to reactor vessel internals components because of the difficulty in welding irradiated materials. As documented in MRP-379, EPRI developed a PWR irradiated materials welding guideline [37] that concluded that, in a typical PWR, a number of components can be repaired by welding with conventional techniques. Guidance presented in this MRP-379 report describes distances from landmark points in each reactor design where helium thresholds are anticipated to occur, and these distances can be used to evaluate weldability.

Section 7: Implementation Requirements

The purpose of this section is to summarize the implementation requirements of these guidelines. As stated previously, these guidelines do not reduce, alter, or otherwise affect current ASME B&PV Code Section XI, guidance issued under NEI 03-08 by another IP, or plant-specific licensing in-service inspection requirements. These guidelines do not apply to new plants beginning construction after calendar year 2007.

Utilities may elect to use this document to meet the requirement for an integrated plant assessment (IPA) under 10 CFR 54.21. If this approach is used, then the utility owners are to confirm that PWR internals components and materials within the scope of license renewal are consistent with MRP-189 [10] and MRP-191 [12]. If components or materials are not consistent, then they must be dispositioned using the same process.

PWR Internals Asset Management/Preservation

Long-term asset preservation and management planning for PWR reactor internals can substantially mitigate severely adverse impacts of otherwise impactful and high-economic-risk inspection findings (for instance, refueling outage extensions and high-repair-cost components) and is also considered crucial under the NEI 03-08 materials management initiative. Additional background and supporting information may be found in the latest revision of EPRI letter report MRP 2021-007 [89].

7.1 NEI 03-08 Implementation Protocol

These guidelines are a work product of the EPRI MRP, an IP as defined in NEI 03-08 [1]. Appendix B to NEI 03-08, Implementation Protocol, defines the processes and expectations for implementing industry guidance issued under the Materials Initiative, and requires that IPs identify the specific implementation category for requirements identified by guideline-type work products.

The three implementation categories described in NEI 03-08 are as follows:

- Mandatory—to be implemented at all plants where applicable
- Needed—to be implemented wherever possible, but alternative approaches are acceptable

- Good Practice—implementation is expected to provide significant operational and reliability benefits, but the extent of use is at the discretion of the individual utility

The following sections list or summarize the requirements contained in this document. MRP-227, Revision 2 incorporates all Needed and Mandatory guidance from MRP 2014-006 [45], MRP 2017-009 [78] (including NSAL-16-1 [47]), MRP 2018-002 [48] (including NSAL-16-1 [47]), MRP 2018-007 [79] (including NSAL-17-1 [43]), MRP 2018-022 [84], MRP 2018-027 [54] (including NSAL-18-1 [52]), MRP 2019-002 [71], TB-07-2 [75], TB-12-5 [46], TB-14-5 [56], TB-16-4 [59], TB-19-5 [50], OG-19-101 [77] (including NSAL-18-1 [52]), and OG-20-113 [55] (including NSAL-20-1 [51]); these guidance documents are referenced for use in these guidelines as appropriate. A failure to meet a Needed or a Mandatory requirement is a deviation from the guidelines; a written justification for the deviation must be prepared and approved as described in Appendix B to NEI 03-08 [1]. A copy of the deviation is sent to the MRP so that improvements to the guidelines can be developed.

7.2 Aging Management Requirement

Mandatory: *Each commercial U.S. PWR unit shall develop, document, and maintain an engineering program for management of aging of reactor internal components.*

Unless otherwise specified by the issuance letter for this guideline, updates of programs reflecting the requirements of this guideline may be in accordance with plant-specific utility procedures.

7.3 Reactor Internals Guidelines Implementation Requirement

Needed: *Each commercial U.S. PWR unit shall implement the requirements of Tables 4-1 through 4-9 and Tables 5-1 through 5-3 for the applicable design. The examination requirements detailed in these tables may be replaced or modified without deviation by a plant implementing an alternate aging management strategy, that addresses the aging degradation mechanisms within these guidelines, supported by a plant-specific technical justification. This may be necessary in cases such as bolt replacements or component modification. See Appendix C for additional details on performing such evaluations.*

Implementation means performance of examinations (or plant-specific modifications) of applicable components within the time frame specified in the applicable tables. As stated previously, these guidelines do not reduce, alter, or otherwise affect current ASME B&PV Code Section XI, guidance issued under NEI 03-08 by another IP or plant-specific licensing in-service inspection requirements. It is acknowledged that certain PWR internals component items are managed independently from MRP-227 but are referenced herein for awareness and information.

In accordance with Appendix C of NEI 03-08 [1], it was determined that NRC approval of MRP-227, Revision 2 via safety evaluation is needed prior to generic release for implementation. Therefore, implementation of Tables 4-1 through 4-9 and Tables 5-1 through 5-3 in MRP-227, Revision 2 is not required at this time. MRP-227 will be revised upon approval by the NRC (Revision 2-A), and an implementation timeline will be included at that time. If a site chooses to follow Tables 4-1 through 4-9 and Tables 5-1 through 5-3 in MRP-227, Revision 2, the site is responsible for reviewing its site-specific design bases, license renewal commitments and in-service relief requests per NEI-03-08 to ensure that there are no limitations that would preclude implementation.

7.4 Examination Procedures Requirement

Needed*: Examinations specified in these guidelines shall comply with the Needed requirements in the MRP-228 Inspection Standard [3].*

7.5 Examination Results Requirement

Needed*: Examination results that do not meet the examination acceptance criteria defined in Section 5 of these guidelines shall be recorded and entered in the owner's plant corrective action program and dispositioned. Engineering evaluations used to disposition an examination result that does not meet the examination acceptance criteria in Section 5, shall be conducted in accordance with NRC approved evaluation methods (that is, ASME Code Section XI, PWR Owners Group topical report WCAP-17096-NP-A or equivalent method).*

7.6 Results Reporting Requirement

Needed*: Each commercial U.S. PWR unit shall provide a summary report of all inspections and monitoring (including coverage[s] achieved and inspection limitations), items requiring evaluation, and new repairs to the MRP Program Manager within six months of the completion of an outage during which PWR internals with NEI 03-08 inspection requirements and within the scope of MRP-227 are examined.*

This summary of the results will be compiled into an overall industry report that will track industry progress, aid in evaluation of significant issues, identify fleet trends, and provide a determination of any needed revisions to these guidelines. The industry report will be updated biennially for the benefit of the fleet, the regulator, the PWROG, and other industry stakeholders. This biennial report will serve to assist in review of operating experience and required monitoring and trending for aging management programs established by the industry.

Section 8: References

1. Guidelines for the Management of Materials Issues, NEI 03-08, Nuclear Energy Institute, Washington, DC, latest edition.
2. ASME Boiler & Pressure Vessel Code, Section XI, Division 1, "Rules for Inservice Inspection of Nuclear Power Plant Components," American Society of Mechanical Engineers, New York, NY, 2001 Edition, Plus 2003 Addenda, or later.
3. *Materials Reliability Program: Inspection Standard for Pressurized Water Reactor Internals – 2020 Update (MRP-228, Rev. 4)*. EPRI, Palo Alto, CA: 2020. 3002018245, or subsequent revision.
4. 10 CFR 50.55a, Codes and Standards, Title 10 (Energy), Part 50 (Domestic Licensing of Production and Utilization Facilities) of the Code of Federal Regulations, U.S. Nuclear Regulatory Commission, Washington, DC, 2020.
5. U.S. Nuclear Regulatory Commission Report, NUREG-1801, Revision 2, "Generic Aging Lessons Learned (GALL) Report," December 2010. (ML103490041).
6. U.S. Nuclear Regulatory Commission Report, NUREG-2191, Revision 0, "Generic Aging Lessons Learned for Subsequent License Renewal (GALL-SLR) Report," July 2017. (ML17187A031).
7. *Materials Reliability Program: Framework and Strategies for Managing Aging Effects in Reactor Internals (MRP-134)*. EPRI, Palo Alto, CA: 2005. 1008203.
8. *Materials Reliability Program: Characterization of Decommissioned PWR Vessel Internals Material Samples—Material Certification, Fluence, and Temperature (MRP-128)*. EPRI, Palo Alto, CA: 2003. 1008202.
9. *Materials Reliability Program: PWR Internals Material Aging Degradation Mechanism Screening and Threshold Values (MRP-175, Revision 1)*. EPRI, Palo Alto, CA: 2017. 3002010268.
10. *Materials Reliability Program: Screening, Categorization, and Ranking of B&W-Designed PWR Internals (MRP-189, Revision 3)*. EPRI, Palo Alto, CA: 2019. 3002013218.
11. *Materials Reliability Program: Failure Modes, Effects, and Criticality Analysis of B&W-Designed PWR Internals (MRP-190)*. EPRI, Palo Alto, CA: 2006. 1013233.

12. *Materials Reliability Program: Screening, Categorization, and Ranking of Reactor Internals Components for Westinghouse and Combustion Engineering PWR Design (MRP-191, Revision 2)*. EPRI, Palo Alto, CA: 2018. 3002013220.

13. *Materials Reliability Program: Functionality Analysis for B&W Representative PWR Internals (MRP-229, Revision 4)*. EPRI, Palo Alto, CA: 2020. 3002018247.

14. *Materials Reliability Program: Functionality Analysis for Westinghouse and Combustion Engineering Representative PWR Internals (MRP-230, Revision 3)*. EPRI, Palo Alto, CA: 2020. 3002018248.

15. *Materials Reliability Program: Aging Management Strategies for B&W PWR Internals (MRP-231, Revision 4)*. EPRI, Palo Alto, CA: 2021. 3002020103.

16. *Materials Reliability Program: Aging Management Strategies for Westinghouse and Combustion Engineering PWR Internal Components (MRP-232, Revision 2)*. EPRI, Palo Alto, CA: 2020. 3002020104.

17. *Materials Reliability Program: Pressurized Water Reactor Internals Inspection and Evaluation Guidelines (MRP-227-A)*. EPRI, Palo Alto, CA: 2011. 1022863.

18. *Materials Reliability Program: Pressurized Water Reactor Internals Inspection and Evaluation Guidelines (MRP-227, Revision 1-A)*. EPRI, Palo Alto, CA: 2019. 3002017168.

19. Final Safety Evaluation of Action Items 1 and 7 from Topical Report MRP-227-A, "Materials Reliability Program: Pressurized Water Reactor Internals Inspection and Evaluations Guideline" (CAC NO. MF7223 EPID: L-2016-TOP-0001), January 29, 2018. (ML18016A008).

20. Letter to Reactor Internals Focus Group from MRP, Subject: Minutes of the Expert Panel Meetings on Expansion Criteria for Reactor Internals I&E Guidelines, MRP 2008-036 (via email), June 12, 2008.

21. ASME Boiler & Pressure Vessel Code, Section V, Nondestructive Examination, American Society of Mechanical Engineers, New York, NY, 2004 Edition, July 1, 2004.

22. *Nondestructive Evaluation: Evaluation of Remote Visual Examination Methods*. EPRI, Palo Alto, CA: 2006. 1013537.

23. *Remote Visual Testing Round-Robin Study*. EPRI, Palo Alto, CA: 2016. 3002007793.

24. *Evaluation of the Basis for Periodic Visual Examinations of Accessible Areas of Reactor Vessel Interior per Examination Category B-N-1 of ASME Section XI, Division 1*. EPRI, Palo Alto, CA: 2018. 3002012966.

25. Topical Report BAW-2248A, "Demonstration of the Management of Aging Effects for the Reactor Vessel Internals," March 2000.

26. *BWRVIP-100 Revision 1-A: BWR Vessel and Internals Project, Updated Assessment of the Fracture Toughness of Irradiated Stainless Steel for BWR Core Shrouds*. EPRI, Palo Alto, CA: 2016. 3002008388.

27. ASME Boiler & Pressure Vessel Code, Section XI, Division 1, Nonmandatory Appendices, Appendix C, "Evaluation of Flaws in Austenitic Piping," American Society of Mechanical Engineers, New York, NY, 2004 Edition, July 1, 2004.

28. ASME Boiler & Pressure Vessel Code, Section III, Division 1, Nonmandatory Appendices, Appendix F, "Rules for Evaluation of Service Loadings with Level D Service Limits," American Society of Mechanical Engineers, New York, NY, 2004 Edition, July 1, 2004.

29. *Materials Reliability Program: Fracture Toughness Evaluation of Highly Irradiated PWR Stainless Steel Internal Components (MRP-210)*. EPRI, Palo Alto, CA: 2007. 1016106.

30. BWRVIP-14-A: BWR Vessel and Internals Project, Evaluation of Crack Growth in BWR Stainless Steel Reactor Pressure Vessel Internals (BWRVIP-14-A). EPRI, Palo Alto, CA: 2008. 1016569.

31. BWRVIP-99-A: BWR Vessels and Internals Project, Crack Growth Rates in Irradiated Stainless Steels in BWR Internal Components. EPRI, Palo Alto, CA: 2008. 1016566.

32. *Materials Reliability Program: PWR Internals Age-Related Material Properties, Degradation Mechanisms, Models, and Basis Data – State of Knowledge (MRP-211, Revision 1)*. EPRI, Palo Alto, CA: 2017. 3002010270.

33. WCAP-17096-NP-A, "Reactor Internals Acceptance Criteria Methodology and Data Requirements" Revision 2 (August 2016), or latest NRC-approved revision.

34. *Materials Reliability Program: Thermal Aging and Neutron Embrittlement Assessment of Cast Austenitic Stainless Steels and Stainless Steel Welds in PWR Internals (MRP-276)*. EPRI, Palo Alto, CA: 2010. 1020959.

35. *Materials Reliability Program: Evaluation of Westinghouse PWR Reactor Core Barrel Weld Inspection Requirements (MRP-376)*. EPRI. Palo Alto, CA: 2014. 3002002685.

36. S. Fyfitch, H. Xu, A. Demma, R. Carter, R. Gamble, and P. Scott. "Fracture Toughness of Irradiated Stainless Steel in Nuclear Power Systems," 14th Env-Deg Conference, 2009.

37. *Materials Reliability Program: Irradiated Materials Welding Guideline (MRP-379)*. EPRI, Palo Alto, CA: 2014. 3002002954.

38. *Models of Irradiation-Assisted Stress Corrosion Cracking of Austenitic Stainless Steels in Light Water Reactor Environments: Volume 1: Disposition Curves Development*. EPRI, Palo Alto, CA: 2014. 3002003103.

39. ASME Boiler & Pressure Vessel Code, Case N-889, "Reference Stress Corrosion Crack Growth Rate Curves for Irradiated Austenitic Stainless Steels in Light Water Reactor Environments," July 12, 2018.

40. PWR Owners Group report PWROG-15032-NP Revision 0, "Statistical Assessment of PWR Reactor Vessel Internals Cast Austenitic Stainless Steel (CASS) Materials," Westinghouse Electric Company LLC, 2015.

41. U.S. Nuclear Regulatory Commission letter "Final Safety Evaluation for Electric Power Research Institute Topical Report MRP-227, Revision 1, "Materials Reliability Program: Pressurized Water Reactor Internals Inspection and Evaluations Guideline" (CAC NO. MF7223; EPID L-2016-TOP-0001)," dated April 25, 2019.

42. Letter from Charles R. Pierce to the U.S. Nuclear Regulatory Commission, "Edwin I. Hatch Nuclear Plant Unit 1 Updated Status/Analysis of Core Shroud," May 14, 2014 (ADAMS Accession No. ML14139A178).

43. Westinghouse Nuclear Safety Advisory Letter, NSAL-17-1, "Guide Tube Guide Card Wear Attributed to Ion Nitride Rod Cluster Control Assembly," January 16, 2017.

44. WCAP-17451-P, Revision 2, "Reactor Internals Guide Tube Wear—Westinghouse Domestic Fleet Operational Projections," November 2018. (*Proprietary*)

45. Materials Reliability Program Letter, MRP 2014-006, "*Materials Reliability Program: Pressurized Water Reactor Internals Inspection and Evaluation Guidelines (MRP-227-A)*. EPRI, Palo Alto, CA: 2011. 1022863, Transmittal of Interim Guidance," February 18, 2014.

46. Westinghouse Technical Bulletin, TB-12-5, "Baffle Bolt Degradation in a Westinghouse NSSS Plant with Downflow Reactor Internal Design," March 7, 2012.

47. Nuclear Safety Advisory Letter, NSAL-16-1, Rev. 1, "Baffle-Former Bolts," August 1, 2016.

48. Materials Reliability Program Letter, MRP 2018-002, "Transmittal of NEI-03-08 "Needed" Interim Guidance Regarding MRP-227-A and MRP-227, Revision 1 Baffle-Former Bolt Expansion Inspection Requirements for PWR Plants," January 17, 2018.

49. INPO Operating Experience Report, 455142, "Bolt Degradation Identified During Inspection of Reactor Vessel Internals Results in Outage Delay," April 18, 2019.

50. Westinghouse Technical Bulletin, TB-19-5, Revision 1, "Westinghouse NSSS PWR Thermal Shield Degradation," February 22, 2021.

51. Westinghouse Nuclear Safety Advisory Letter, NSAL-20-1, "Reactor Vessel Head Control Rod Drive Mechanism Penetration Thermal Sleeve Cross-Sectional Failure," February 14, 2020.

52. Westinghouse Nuclear Safety Advisory Letter, NSAL-18-1, "Thermal Sleeve Flange Wear Leads to Stuck Control Rod," July 9, 2018.

53. U.S. Nuclear Regulatory Information Notice, 2018-10, "Thermal Sleeve Flange Wear Leads to Stuck Control Rod at Foreign Nuclear Plant," August 29, 2018.

54. Materials Reliability Program Letter, MRP 2018-027, "NEI 03-08 Needed Inspection Guidance for PWR CRDM Thermal Sleeve Wear," August 31, 2018.

55. Pressurized Water Reactor Owners Group Letter, OG-20-113, "NEI 03-08 Needed and Good Practice Guidance: Thermal Sleeve Cross-Sectional Failure – Westinghouse Nuclear Safety Advisory Letter NSAL-20-1," April 13, 2020.

56. Westinghouse Technical Bulletin, TB-14-5, "Reactor Internals Lower Radial Support Clevis Insert Cap Screw Degradation," August 25, 2014.

57. Materials Reliability Program Letter, MRP 2017-024, "Notification of Recent Operating Experience (OE) Related to PWR Clevis Insert Bolting Fabricated from X-750," September 19, 2017.

58. Materials Reliability Program Letter, MRP 2020-011, "Notification of Recent Operating Experience (OE) Related to Displaced PWR Clevis Insert Assembly," April 28, 2020.

59. Westinghouse Technical Bulletin, TB-16-4, "Fuel Alignment Pin Malcomized Surface Degradation," August 15, 2016.

60. U.S. Nuclear Regulatory Commission, "Office of Nuclear Reactor Regulation Evaluation of WCAP-17780-P, "Reactor Internals Aging Management MRP-227-A Applicability for Combustion Engineering [(CE)] and Westinghouse [Electric Company (Westinghouse)] Pressurized Water Reactor Designs," and MRP-227-A, Applicability Guidelines for CE and Westinghouse Pressurized Water Reactor Designs" (ADAMS Accession No. ML14309A484).

61. Letter from David M. Czufin and Brian Burgos to the PWR Plant Site Vice Presidents, Subject: Notification of Recent PWR Core Barrel Operating Experience and Recommended Plant Actions, MRP Letter 2018-028, August 9, 2018.

62. Materials Reliability Program Letter, MRP 2019-009, "Transmittal of NEI-03-08 "Good Practice" Interim Guidance Regarding MRP-227-A and MRP-227, Revision 1 PWR Core Barrel and Core Support Barrel Inspection Requirements," July 17, 2019.

63. U.S. Nuclear Regulatory Commission, BL-88-09, "Thimble Tube Thinning in Westinghouse Reactors," July 26, 1988.

64. U.S. Nuclear Regulatory Commission, NUREG-1800, "Standard Review Plan for Review of License Renewal Applications for Nuclear Power Plants," December 2010. (ML103490036).

65. U.S. Nuclear Regulatory Commission Report, NUREG-2192, "Standard Review Plan for Review of Subsequent License Renewal Applications for Nuclear Power Plants," July 2017. (ML17188A158)

66. U.S. Nuclear Regulatory Commission Information Notice, IN 90-68, "Stress Corrosion Cracking of Reactor Coolant Pump Bolts," October 30, 1990.

67. U.S. Nuclear Regulatory Commission Information Notice, IN 82-29, "Control Rod Drive (CRD) Guide Tube Support Pin Failures at Westinghouse PWRS," July 23, 1982.

68. Pressurized Water Reactor Owners Group Report, PWROG-19028-NP, Revision 0, "Identification of High Risk and High Priority Westinghouse and CE Reactor Vessel Internals Components for Asset Management," October 2019.

69. Pressurized Water Reactor Owners Group Report, PWROG-19024-P, Revision 0, "Risk Mitigation Strategies for High Risk/High Priority Issues," March 2020. (*Proprietary*)

70. Pressurized Water Reactor Owners Group Report, PWROG-14048-P, Revision 2, "Functionality Analysis: Lower Support Columns," August 2017. (*Proprietary*)

71. Materials Reliability Program Letter, MRP 2019-002, "Interim Guidance to MRP-227-A NEI 03-08 Needed Requirements for US Domestic PWR Plants Implementing 'Flexible Power Operations'," March 6, 2019.

72. *Westinghouse and Combustion Engineering Fleet Nuclear Power Plant Operational Variables During Load-Following Operations*. EPRI, Palo Alto, CA: 2016. 3002008119.

73. *Materials Reliability Program: Screening, Categorization, and Ranking of Reactor Internals Components for Westinghouse and Combustion Engineering PWR Design (MRP-191, Revision 1)*. EPRI, Palo Alto, CA: 2016. 3002007960.

74. *Materials Reliability Program: PWR Internals Material Aging Degradation Mechanism Screening and Threshold Values (MRP-175)*. EPRI, Palo Alto, CA: 2005. 1012081.

75. Westinghouse Technical Bulletin, TB-07-2, Rev. 3, "Reactor Vessel Head Adapter Thermal Sleeve Wear," December 7, 2015.

76. Pressurized Water Reactor Owners Group Report, PWROG-16003-P, Revision 2, "Evaluation of Potential Thermal Sleeve Flange Wear," May 2019. (*Proprietary*)

77. Pressurized Water Reactor Owners Group Letter, OG-19-101, "Transmittal of Final PWROG Report PWROG-16003-P, Revision 2, "Evaluation of Potential Thermal Sleeve Flange Wear" (PA-MSC-1654R1)," May 13, 2019. *(Proprietary)*

78. Letter from David Czufin and Brian Burgos to the MRP Integration Committee Members, Subject: Transmittal of NEI-03-08 "Needed" Interim Guidance Regarding Baffle Former Bolt Inspections for PWR Plants as Defined in Westinghouse NSAL 16-01 Rev. 1, MRP Letter 2017-009, March 15, 2017 (ADAMS Accession No. ML17087A106).

79. Letter from David Czufin and Brian Burgos to the PMMP Executive Committee Members and MRP Integration Committee Members, Subject: Transmittal of NEI-03-08 "Needed" Interim Guidance to Address Accelerated Guide Card Wear Operating Experience (OE) Discussed in NSAL-17-1, MRP Letter 2018-007, March 7, 2018.

80. Pressurized Water Reactor Owners Group Report, PWROG-20034-NP, Revision 0, "Reactor Vessel Internals Remote Condition Monitoring," March 2021. (*Proprietary*)

81. *Materials Reliability Program: Pressurized Water Reactor Internals Inspection and Evaluation Guidelines (MRP-227-A)*. EPRI, Palo Alto, CA: 2011. 1022863.

82. Materials Reliability Program Letter, MRP 2013-025, "MRP-227-A Applicability Template Guideline," October 14, 2013.

83. WCAP-16911-P, Revision 0, "Reactor Vessel Head Thermal Sleeve Wear Evaluation for Westinghouse Domestic Plants," July 2008. (*Proprietary*)

84. Materials Reliability Program Letter, MRP 2018-022, "Transmittal of MRP-191-SLR Screening, Ranking and Categorization Results and Interim Guidance in Support of Subsequent License Renewal at U.S. PWR Plants," August 31, 2018.

85. Westinghouse Letter, LTR-AMLR-20-96, Revision 0, "MRP-227 Revision 2 Subsequent License Renewal Peer Review Meeting Minutes," December 15, 2020. *(Proprietary)*

86. Westinghouse Letter, LTR-AMLR-20-58, Revision 0, "MRP-232 Revision 2 Expert Panel Meeting Minutes," October 12, 2020. *(Proprietary)*

87. Pressurized Water Reactor Owners Group Letter, OG-20-31, "Guidance: Westinghouse NSSS PWR Thermal Shield Degradation – Westinghouse Technical Bulletin 19-5," January 23, 2020.

88. Materials Reliability Program Letter, MRP 2018-018, "PWR Reactor Materials Degradation "Heat Maps" for the Westinghouse/Combustion Engineering Designs," July 13, 2018.

89. Materials Reliability Program Letter, MRP 2021-007, "Transmit Asset Preservation/Asset Management Considerations for Westinghouse and CE Designs to PWR Utility Members for Use and Consideration when Implementing MRP-227 Guidance," June 14, 2021.

90. M. Foucault and C. Benhamou, "Influence of Surface Condition on the Susceptibility of Alloy X750 to Crack Initiation in PWR Primary Water," Environmental Degradation of Materials in Nuclear power Systems Water Reactors (Proc. 6th Int. Conf., San Diego, CA, USA, 1993). Minerals Metals and Materials Society, Curran Associates, Inc., 1994.

Appendix A: Reactor Internals Operational Experience

In Revision 0 to MRP-227, Appendix A provided guidance for development of an AMP for PWR internals components. This guidance has been deleted from MPR-227. Guidance for AMP preparation may be found in AMP XI.M16A of NUREG-1801, Revision 2 (or subsequent revisions) [5] for first license renewal or in AMP XI.M16A of NUREG-2191, Revision 0 (or subsequent revisions) [6] for SLR.

The following compilation of operational experience neither replaces efforts by licensees to review and document their plant-specific operating experience that may affect plant programs, nor does it preclude licensee participation in industry initiatives that perform these functions.

Commercial PWR vessel internals in the United States have experienced safe, relatively trouble-free operation. There have been no instances to date in which a PWR in the United States has posed a threat to public safety as a result of PWR internals material aging degradation. Although relatively few incidents of PWR vessel internals aging degradation have been reported in operating U.S. commercial PWR plants, a summary of the current operating experience including international experience is useful for licensees developing aging management programs. This summary is organized first by the aging effect and subsequently by the age-related degradation mechanism leading to that effect. The operating experience includes findings made prior to and after the implementation of MRP-227.

Cracking

IGSCC—Three B&W-designed PWRs experienced internals bolt failures of the lower thermal shield bolts discovered during the 1981 and 1982 in-service inspections. The thermal shield bolt locking clips at these three plants were visually observed to be missing or loose. Subsequent examinations during 1982, 1983, and 1984 revealed bolt failures at four additional units. These failures included upper core barrel, lower core barrel, upper thermal shield, and surveillance specimen holder tube bolts. All the affected fasteners were fabricated from Alloy A-286 ASTM A 453,

Grade 660, Class A[1] or B[2] material. The results of an extensive evaluation program revealed that the failure mechanism was due predominantly to an environmentally assisted IGSCC mechanism. However, for some bolts, there was evidence that fatigue was also a contributor, likely in the form of corrosion fatigue. The initial examinations, according to the guidelines in MRP-227-A [17], were completed in the 2007–2014 time frame. Examinations of the upper core barrel, lower core barrel, and flow distributor bolts identified a small number of additional bolts with cracklike indications. Subsequent examination has occurred for the UCB bolts at one unit, which resulted in no new indications.

In general, the primary mechanism causing cracking and failure of the Alloy A-286 PWR internals bolts was IGSCC. All the failures occurred in the bolt head-to-shank fillet. Information Notice (IN) 90-68 [66] provides information about IGSCC cracking in Alloy A-286 bolts used to hold the turning vanes to reactor coolant pumps at a foreign plant. The IN 90-68 document includes a general discussion of the problems experienced with cracking of Alloy A-286 bolting materials, including the problems identified with respect to B&W PWR internals bolting.

In addition, in 2012, as a result of impact damage to a B&W unit vent valve, an Alloy A-286 jackscrew normally in compression was subjected to a bending stress and cracked as a result of IGSCC.

In 2005, cracking of replacement core barrel-to-former plate bolts fabricated from cold-worked (CW) Type 316Ti stainless steel was observed in a German PWR by visual inspection. These bolts had replaced the original Alloy X-750 core barrel bolts in the late 1980s, which had exhibited failure because of primary water stress corrosion cracking (PWSCC) (described later). Subsequent UT inspection and failure analysis confirmed that the cracking was confined to the bolt head initiating from the bolt fillet transition, but the bolt threads and shank were free from cracking. The failure mechanism of the CW Type 316Ti stainless steel replacement core barrel bolts has been identified as IGSCC. To date, all known IGSCC failures of core barrel bolts have been limited to the original Alloy X-750 and the replacement CW Type 316Ti stainless steel in German PWRs.

PWSCC—Alloy X-750 has experienced numerous worldwide failures in the Westinghouse-designed PWR internals involving the control rod guide tube support pins (or split pins). As noted in IN 82-29 [67], these failures first appeared in Japan in the late 1970s. Split pin failures prompted investigations and modifications to manufacturing practices.

---

[1] Solution anneal at 1650°F for 1 hour; oil or water quench; age at 1325°F for 16 hours; air cool.

[2] Solution anneal at 1800°F for 1 hour; oil or water quench; age at 1325°F for 16 hours; air cool.

The original heat treatment condition AH[3] of the age-hardenable material has shown the most susceptibility to PWSCC cracking. By the early 1980s, nearly all of the original design split pins had been replaced with the improved HTH[4] heat treatment condition.

In 1987, failures of Alloy X-750 HTH condition control rod guide tube support pins in French PWRs occurred at much shorter times and lower stresses than expected. Foucault and Benhamou showed that these early failures were due to the surface condition of the pins [90]. Any heat treatment after machining degrades the performance of Alloy X-750. The greatest resistance to IGSCC was found when machining or polishing was performed after heat treatment, which removes an oxide layer from the surface of the material. Additional refinements have since been made to the manufacturing practices used to produce a newer version of Alloy X-750 HTH split pins.

After an extensive worldwide industry program to develop a material heat treatment for Alloy X-750 that would have maximum resistance to SCC, Westinghouse and utility customers conducted a campaign during the 1980s to replace guide tube support pins. Ultimately, Westinghouse developed a CW Type 316 stainless steel support pin as a replacement and a number of utilities have performed replacements with this design. A few utilities have opted to perform ultrasonic inspections rather than initiate wholesale replacements, whereas still other utilities have preferred to take no action at this time.

Alloy X-750, in a condition similar to AH, was used for the baffle-to-former plate bolts in the German Biblis-type reactors. After about four years of service, several bolts were found either cracked or severed. The cracking occurred in the bolt head-to-shank fillet area and was attributed to IGSCC (that is, PWSCC in nickel-base materials). The bolt stress levels were reportedly at the yield strength of the material.

Failures have been attributed to the following three factors:

1. Heat treatment condition
2. High peak stresses
3. Surface damage due to fabrication processes

Failures of the lower radial support system (LRSS) Alloy X-750 clevis insert bolts were reported by one Westinghouse-designed plant in 2010. The lower clevis structure interfaces with the radial keyways on the core barrel to provide rotational alignment and lateral support for the lower internals. The Alloy X-750 bolting was used to fasten the Alloy 600 clevis inserts to the RV lugs. The failed clevis insert bolts were removed. A

---

[3] Hot finish at 1800°F; equalize at 1625°F for 24 hours; age at 1300°F for 20 hours; air cool.

[4] Hot roll to 35% min. reduction; solution anneal at 2025°F for 1 hour; rapid cool; age at 1300°F for 20 hours; air cool.

metallurgical examination was performed on the removed bolts which showed the cause of failure to be PWSCC (Ref. Westinghouse TB-14-5 [56]). The clevis insert bolting had been heat treated using a low temperature process that has proven to be susceptible to PWSCC in the guide tube support pins. The relatively long time to failure in the clevis insert bolting may be attributed to the lower service temperature.

Two additional cases of clevis insert bolt degradation have been reported to the industry. Two visually degraded clevis insert bolts were detected in one plant in 2017 [57]. The degradation of these two bolts was dispositioned by evaluation and the plant has continued operation. In 2020, another plant discovered a clevis insert that had displaced from its installed position [58]. The displacement indicated that all eight clevis insert bolts intended to hold that insert in place must have failed. The displacement of this clevis insert also demonstrated that clevis insert bolt degradation may lead to further degradation in the clevis assembly.

During 2012–2016 inspections of four B&W units with modified vent valve locking devices, crimped Alloy 600 locking cups were inspected and cracklike indications associated with some of the locking cup crimps were identified at three of the units.

IASCC—A considerable amount of PWR internals IASCC has been observed in European PWRs since the 1980s, with emphasis on cracking of baffle-former bolting. Ultrasonic (UT) testing of baffle-former bolts in six French PWRs discovered failure rates ranging from 1.2% to 11% of the 960 total bolts. For this reason, the U.S. PWR owners and operators began a program to inspect the baffle-former bolting to determine whether similar problems might be expected in U.S. plants. One benefit of this program was the experience gained with the UT examination techniques used in the inspections. In addition, the industry began laboratory testing projects to gather the materials data necessary to support future inspections and evaluations.

As part of the U.S. baffle-former bolt program, UT inspections were performed at two units with CW Type 316 stainless steel bolting (1998/1999). In one unit, 1086 of 1088 bolts were inspected with no indications. Two bolts could not be inspected because of accessibility and were replaced. In the second unit, all 1088 bolts were inspected, again with no indications. A proactive minimum bolt pattern replacement was performed at these plants (276 bolts for Unit 1 and 203 bolts for Unit 2). Bolts removed from these plants were subject to follow-on mechanical testing and hot cell examination. This follow-on testing confirmed the NDE results.

The program also included inspection of two plants with solution-annealed (SA) Type 347 stainless steel baffle-former bolting. In one plant, all 728 baffle-former bolts were inspected by UT in 1998, with 55 bolts (7.5%) having indications that exceeded the UT acceptance criteria. At another unit, 639 of the 728 SA Type 347 stainless steel baffle-former bolts were examined in 1999, with 59 bolts (9.2%) having indications

failing to meet the UT acceptance criteria. At the first unit, on-site underwater mechanical testing of the removed baffle-former bolts indicated that the actual number of defective bolts was lower than suggested by the UT inspection. However, these known European or domestic baffle-former bolt IASCC indications are not necessarily applicable to all PWR designs. To date, the incidents have been generally associated with CW Type 316 stainless steel or SA Type 347 stainless steel.

Bolts fabricated from SA Type 304 stainless steel appear to be less susceptible. An inspection was performed at one B&W-designed unit in 2005 on all 864 baffle-former bolts and no UT indications were observed.

In 2010, one Westinghouse plant reported finding several broken SA Type 347 stainless steel baffle-former bolt heads and Type 304 stainless steel locking bars on the lower core plate during a normal refueling outage [46]. Subsequent investigation identified a region containing approximately 40 broken or severely damaged bolts. The damage was limited to the upper area of a single large baffle plate.

Visual and volumetric inspections of baffle-former bolts have been conducted under the guidance of MRP-227 at a number of U.S. B&W and Westinghouse-design units. Four B&W units performed the initial MRP-227 examination of the baffle-former bolts between 2012 and 2016. All the bolts were original and constructed of SA Type 304 SS. Of the 3,450 bolts inspected, only 1 displayed cracklike indications. Six bolts were not inspectable because of fit-up problems between the UT probe and bolt heads. Subsequent examination has occurred for the baffle-former bolts at one B&W unit in 2020, which resulted in 25 bolts with UT indications.

Visual and volumetric inspections of baffle-former bolts have been conducted under the guidance of MRP-227 at a number of Westinghouse-designed units. Nine Westinghouse units performed baffle-former bolt inspections between 2011 and 2014. The majority of the bolts were original and constructed of SA Type 347 SS; however, two of the units also inspected a number of replacement CW Type 316 SS bolts, previously installed under the baffle-former bolt program. The bolt designs included both internal and external hex heads. The internal hex heads did present some difficulties for proper mating of the UT probe with 58 bolts at one of the units. Of the 6,053 original SA Type 347 SS bolts inspected, 134 or approximately 2% exhibited cracklike indications. None of the 231 replacement CW Type 316 SS bolts inspected exhibited cracklike indications. One unit also reported missing lock bar welds associated with one baffle-former bolt and one baffle-edge bolt; both were assumed to be original fabrication defects.

Starting in 2016, several Westinghouse 4-loop design plants operating in a downflow configuration with Type 347 stainless steel baffle-former bolts observed higher-than-expected levels of baffle-former bolt degradation, including significant clusters of degraded bolts. During the spring 2016 refueling outage, one Westinghouse-designed plant performed MRP-227-A

baffle-former bolt inspections. A visual inspection identified 31 baffle-former bolts with protruding heads and lock bar damage, including 2 bolts with missing heads, whereas the UT inspection identified 182 baffle-former bolts with indications and 14 nontestable bolts, for a total of 227 bolts with potential indications out of a total of 832 bolts. Clustering of the degraded bolts was noted. A visual inspection of the baffle-to-baffle edge bolts and the baffle plates was performed and did not identify any damaged edge bolts or any abnormalities with the baffle plates. In addition, there were no leaking fuel rods in the core [47].

Furthermore, during the spring 2016 refueling outage, a second Westinghouse-designed plant performed baffle-former bolt visual and UT inspections. During the visual inspection, 18 baffle-former bolts were identified with missing bolt heads or protruding heads. The UT inspection identified 138 baffle-former bolts with indications and 18 nontestable bolts. Additionally, 8 baffle-former bolts were not UT inspected because they were identified to have visually cracked lock bar welds. This represents a total of 182 bolts with potential indications, of a total of 832 bolts. An additional 7 failures were discovered while replacement work was being performed, bringing the total to 189. Clustering of the degraded bolts was noted. A visual inspection of the baffle-to-baffle edge bolts and baffle plates was performed and did not identify any damaged edge bolts or abnormalities in the baffle plates. There was one leaking fuel rod in the core. The leak mechanism was debris fretting from a separated bolt head or lock bar and not from baffle jetting [47]. During this plant's 2019 outage, visually degraded baffle-former bolts were discovered during refueling operations [49]. Visual and volumetric examination of the original and some replacement bolts found 272 degraded baffle-former bolts, which were then replaced. This represented a much more accelerated rate of degradation than experienced at other plants conducting baffle-former bolt reinspections and may be the result of an alternate (non-IASCC) degradation mechanism related to the degradation of thermal shield support structures observed at the plant during the same outage [50].

In 2017, multiple Westinghouse-designed downflow plants with Type 347 stainless steel baffle-former bolts performed MRP-227-A baffle-former bolt inspections. One plant identified 256 bolts with indications during a UT inspection of 829 bolts. A subsequent UT inspection was performed during the spring 2019 refueling outage, observing 12 additional bolts with indications out of 562 bolts inspected. Another plant identified 48 bolts with indications during a UT inspection of 828 bolts during its 2017 inspection. A subsequent UT inspection was performed during the spring 2019 refueling outage, observing 13 additional bolts with indications out of 620 bolts inspected. Of the remaining plants that performed baffle-former bolt inspections in 2017, one identified 9 bolt indications during a UT inspection of 832 bolts, another identified 1 bolt indication during a UT inspection of 832 bolts, and another identified no bolt indications during a visual inspection of 832 bolts.

In the spring refueling outage of 2018, three other Westinghouse-designed downflow plants with Type 347 stainless steel baffle-former bolts performed MRP-227-A baffle-former bolt inspections. One plant identified 3 bolts with indications during a UT inspection of 831 bolts, another plant identified 13 bolts with indications during a UT inspection of 554 bolts, and the third plant identified 6 bolts with indications during a UT inspection of 825 bolts.

In the spring refueling outage of 2019, one Westinghouse-designed converted upflow plant with Type 316 stainless steel baffle-former bolts performed MRP-227-A baffle-former bolt inspections. Of a total of 1088 baffle-former bolts, 6 bolts were nontestable, and 13 bolts were confirmed to have indications. In the fall refueling outage of 2019, one Westinghouse-designed standard upflow plant with Type 316 stainless steel baffle-former bolts performed MRP-227, Revision 1-A baffle-former bolt inspections. Of a total of 960 baffle-former bolts, 11 bolts were nontestable, and no bolts were confirmed to have indications.

Little IASCC has been observed aside from the baffle-former bolt experience. One potential area with experience is the core barrel. During spring 2018 inspections, one CE-designed plant identified cracklike surface indications at the CSB assembly welds—specifically, 1 vertically oriented indication at the middle girth weld and 45 indications adjacent to the middle axial weld. Most of the middle axial weld indications were oriented perpendicular to the weld, circumferential to the barrel. A supplemental volumetric examination to characterize the indications was subsequently performed. The examination confirmed that the visually identified indications did not extend through the CSB thickness. These flaws were located in material with neutron dose levels high enough for potential IASCC, but the degradation mechanism has not been confirmed. The potential for cracking of CE-designed CSBs and Westinghouse-designed core barrels (CBs) was acknowledged in the previous I&E guidelines; however, the observed condition was inconsistent with expectations for number, location, and orientation of the indications. The OE was communicated to the PWR fleet in MRP 2018-028 [61]. NEI 03-08 "Good Practice" recommendations to inspect the axial welds in CE CSBs and Westinghouse CBs was issued in MRP 2019-009 [62]. Several plants have conducted these axial weld inspections and detected no indications.

Flow-Induced Vibration—In the earlier PWRs, a number of incidents occurred indicating that thermal shields and their support system could be vulnerable to the high flow forces in the vessel-core barrel downcomer. Westinghouse, CE, and B&W responded to these experiences in different ways. The Westinghouse approach was to add vibration resistance to the shields and to embark on a program to develop advanced thermal shield designs for future plants. For CE plants, thermal shields were removed from operation for all but one facility, which maintained integrity through positioning pin replacement, tightening, and inspection. The B&W approach was to modify and repair the thermal shields for improved resistance to vibration.

The dominant degradation mechanisms in thermal shields are high-cycle fatigue and SCC resulting from flow-induced vibration, with mechanical wear as a potential consequence. These degradation events appeared predominantly in the earliest thermal shield designs. Typically, the degraded components were fasteners or thermal shield support structures, not the thermal shield itself.

Two CE plants reported cases in which failures in the thermal shield resulted in damage to the core barrel. The thermal shields were removed from both plants and the damage to the core barrels was mitigated. One of these two plants with past thermal shield experience is the same plant mentioned in the earlier IASCC section with regard to potential IASCC-related degradation of the core support barrel.

Three early Westinghouse plants identified thermal shield degradation. The thermal shield degradation in these three plants was repaired; however, they are no longer operating and no operating plant has the same thermal shield design. Two additional Westinghouse plants have reported isolated failures of core barrel bolting that may be linked to flow-induced vibration.

Two Westinghouse-designed plants have experienced degradation of the thermal shield support block bolts located at the top of the thermal shield [50]. The first event occurred in 1988, and the plant replaced the affected bolt. No further degradation has been observed at that plant since 1988. During a 2019 outage, a different plant experienced difficulty removing the upper internals assembly, which was traced to a failed thermal shield support block bolt interfering with the end of the upper core plate. Inspections during the same outage detected four total failed thermal shield support block bolts, and the bolts were replaced [50].

Loss of Material

Wear—Wear of the in-core instrumentation thimble tubes was observed in the top part of the Zircaloy-4 thimble tubes at three CE-designed units. These tubes experienced through-wall tube degradation as a result of flow-induced vibration in the vicinity of the fuel alignment plate. This particular wear phenomenon was addressed by making modifications to the fuel alignment plate to alter the flow conditions in the vicinity of the entry point of the thimble tubes into the plate. Wear as a result of flow-induced vibration has not been observed in these components after implementing the modifications to the fuel alignment plate. Accordingly, these components are not considered susceptible to this type of wear in the future.

Problems were noted involving the original locking devices for the B&W-design vent valve jackscrews in the late 1970s and early 1980s. The jackscrew locking mechanism was vibrating and wearing through the locking cup. A new locking mechanism was designed and supplied to most B&W units. At least four of the eight vent valves were modified with the redesigned locking devices. The four vent valves next to the two outlet

nozzles were replaced. In the late 1970s and early 1980s, problems were also noted involving the original jackscrew guide bushing, which was found to be improperly secured on some valves. Procedures were developed to install the modified locking device on the jackscrew and to secure the bushing when necessary.

Wear of the Westinghouse control rod guide tube assembly guide cards has been reported at several domestic and international plants. The wear enlarges the guide card holes that guide the control rods through the assembly and maintain the alignment of the rods. Specific guidelines for the visual inspection and evaluation of guide card wear have been established by the PWROG (Ref. EPRI letter MRP-2014-006 [45], NSAL-17-1 [43], MRP 2018-007 [79], and WCAP-17451-P [44]) and referenced in MRP-227. The PWROG guidelines use operational time extension curves to determine the remaining life of guide cards. These curves are also used in conjunction with empirical wear data to establish the scope and timing of initial and subsequent inspections.

Six U.S. Westinghouse-designed units performed inspections of guide cards within 124 guide tube assemblies under the guidance of MRP-227 and WCAP-17451-P between 2012 and 2014. Significant wear of isolated guide cards within two guide tube assemblies was observed at two 14 × 14 units; however, the associated guide tube assemblies were deemed suitable for continued service. The remaining units showed only minor guide card wear.

In 2016, based on OE from a European utility regarding aggressive guide card wear for 17 × 17 AXLR guide tubes, several foreign material exclusion (FME) videos of Westinghouse-designed plants with 17 × 17 A/AS/AXLR guide tubes and ion nitride RCCAs were assessed for guide card wear. Although 17 × 17 A/AS/AXLR guide tube FME videos were reviewed in WCAP-17451-P [44], none of these plants had ion nitride rod cluster control assemblies (RCCAs). The evaluations indicated that the guide tube guide cards were wearing at an accelerated pace for this combination of guide tube and RCCA. The wear did not appear to be significant enough to create a nuclear safety concern, but guide card wear measurements were taken during the fall 2016 outage at one of the plants to better quantify the wear. The guide card wear measurement data confirmed the presence of accelerated guide card wear with 17 × 17 A guide tubes and ion nitride RCCAs. Further evaluation of the guide card wear measurement data indicated that one guide tube needed to be taken out of service and that several others would need to be replaced soon afterward. The guide tube taken out of service was judged to have less than one remaining functional cycle of operation. Three more plants with this combination of guide tube and RCCA have been inspected since. Two of these three plants have aggressive guide card wear, and the other plant has wear that could be categorized as moderate. One additional difference in the four plants inspected in the United States with 17 × 17 A/AS guide tubes and ion nitride RCCAs is that the plant with moderate wear uses a heavier absorber rodlet, categorized as Ag-In-Cd, versus the plants with aggressive wear, which use B_4C pellet absorber material. In addition,

plants with 17 × 17 AS guide tube and chrome-plated RCCAs have indicated moderate wear, further strengthening the conclusion that the 17 × 17 A/AS/AXLR guide tube styles are more susceptible to wear as compared with the 14 × 14 and 15 × 15 guide tube styles. For one of the 17 × 17 AS plants inspected, high wear was also noted in the continuous section. The wear was dispositioned to be acceptable.

A total of approximately 29 plants have performed guide card wear measurements in the United States to date. The breakdown of these 29 plants with respect to guide tube design is as follows:

- 14 × 14—4 plants
- 15 × 15—7 plants
- 17 × 17 Std.—12 plants
- 17 × 17 A/AS/AXLR—6 plants

The wear at 14 × 14 and 15 × 15 plants is categorized mostly as low. Moderate to high (aggressive) wear was noted at 17 × 17 guide tube plants.

The wear surfaces on the radial keys and clevis inserts are routinely examined as part of the PWR internals ASME B&PV Code Section XI in-service inspection programs. Although reports of scratches, superficial wear, or both are common in these inspections, one European plant has reported significant wear scars at these surfaces. Guidance for inspection of radial key and clevis insert interfacing surfaces has been provided by Westinghouse in TB-14-5 [56].

In all currently operating Westinghouse and B&W plants, the in-core flux detectors are directed through the reactor vessel (RV) bottom head via thimble tubes or guideways. For the bottom-mounted instrumentation design, the thimble tubes are retractable; the insertion and retraction of these tubes are directed by long-radius guides below the bottom head and by internals guides between the bottom head and fuel assemblies. There is significant variation among plants with regard to thimble tube diameters (outer and inner), thimble tube-to-guide path clearance, length of thimble tube exposed to coolant, and flow conditions. No wear concerns have been identified in the B&W design.

The primary historical concerns with flux thimble degradation in Westinghouse-designed plants have been obstruction of the flux detector pathways, wear due to flow-induced vibration of the thimble tube, flow-induced vibration fatigue damage to thimble tube guideways, and damage to in-core instrumentation flange seating surfaces at refueling. The obstruction problem can often be mitigated by appropriate cleaning procedures at refueling. All Westinghouse plants are required by NRC Bulletin 88-09 [63] to have an inspection program to periodically confirm in-core neutron monitoring system thimble tube integrity. Reductions in

wall thickness caused by wear are normally monitored with an eddy-current inspection. Many plants have chosen to replace the flux thimbles with improved designs. These programs have been successful in managing thimble tube degradation.

A visual inspection in 1973 at one CE-designed plant revealed worn areas in the RV flange and head resulting from inadequate hold-down spring design and subsequent PWR internals vibration. Prior to shutdown, higher-than-normal ex-core neutron detector readings had suggested the possibility of excessive internals vibration. Wear was found on the mating surfaces, alignment keys and slots, snubbers, and outlet nozzle faces. The worn surfaces were repaired and a new design using Belleville spring assemblies greatly increased hold-down capacity and mitigated the issue. This CE-designed plant is scheduled for decommissioning.

Several Westinghouse-designed units performed measurements of 304 SS hold-down spring height between 2012 and 2019. All springs displayed acceptable levels of relaxation that indicated that adequate hold-down capability would be maintained for at least 60 years of operation.

In 2007, anomalies were identified during ISI activities of a reactor vessel closure head at one Westinghouse-designed plant [75]. Several thermal sleeves were found to have wear areas extending up to as much as 360 degrees around the thermal sleeve, where the thermal sleeve exits the bottom end of the control rod drive mechanism (CRDM) head adapter tube. Wear was found in rodded and unrodded penetration locations, as well as at reactor vessel level monitoring instrumentation locations. The wear was attributed to the thermal sleeve contacting the inside diameter (ID) of the CRDM head adapter tube due to a flow-induced impact/whirling motion of the thermal sleeve. The sleeve-to-adapter contact resulted in wear of material on the outside diameter (OD) of the sleeve. Four thermal sleeves that exhibited the most extensive wear were removed [75].

During the spring 2014 outage season, an additional thermal sleeve wear mechanism was identified at one plant when a thermal sleeve at a partial-length CRDM location fell from the reactor vessel closure head during an ISI [75]. Examination of the fallen sleeve showed that the upper flange, which rests inside the CRDM head adapter tube, had worn through. Further inspection of the damaged sleeve and adapter concluded that a mutual wear mechanism existed between the two components. The wear was attributed to flow-induced and pump-induced vibration [75].

Further OE in 2018 has shown that Westinghouse-designed plants that have thermal sleeves in CRDM penetration tubes have the potential for wear of the thermal sleeve flange against the head adapter tube [52]. This type of wear can lead to consequences such as interference with control rod movement. Inspection of the 2018 failed thermal sleeve and the CRDM penetration tube concluded that a mutual wear mechanism existed between the two components [52].

During a planned 2019 refueling outage at a Westinghouse-designed plant, a thermal sleeve was observed to be fractured and resting on an upper internals upper guide tube [51]. This OE showed that a mechanical failure of the thermal sleeve had occurred across its cross section. The fracture occurred beneath the collar that is present on a subset of thermal sleeves supplied by Westinghouse. Based on this OE, Westinghouse-designed plants that operate in a T-cold configuration, and that have CRDM thermal sleeves with a collar below the flange, are potentially susceptible to cracking and separation of the flange from the sleeve [51].

Various plants have experienced thermal sleeve OD/ID wear and flange wear since the publication of references 75, 52, and 51.

Change in Dimension

Irradiation-Induced Growth—Although irradiation-induced growth of zirconium alloys in CE-designed plants was not explicitly identified in MRP-175 [9] as an age-related degradation mechanism to be evaluated as part of the screening process, irradiation-induced growth in the axial direction of the in-core instrumentation thimble tubes has reduced the clearance between the thimble nose and the bottom of the fuel assembly. Some plants had observed that the thimble tube support plate was raised above its normal support position when the upper internals structure was set in place after fuel reload. This indicated that, for some of the thimbles, the gap tolerance between the thimble tube and the bottom end fitting of the fuel assembly had been reduced until the tube contacted the bottom fitting of the fuel assembly and was being loaded in compression. All the currently operating plants affected by this phenomenon have taken action, including replacement of the original thimble tubes with shorter tubes and periodic monitoring of the growth. These actions will address the irradiation-induced growth for the first period of extended operation. CE-designed plants with these top-mounted ICIs that apply for SLR may need to evaluate the potential for irradiation growth of the thimble tubes to cause the same issue again during SLR operation [16].

Miscellaneous

Barrel-Former Bolting—In the mid-1990s, one Westinghouse plant reported finding a Type 347 stainless steel barrel-former bolt on the lower core plate during a refueling outage. Subsequent investigation identified a total of three barrel-former bolts in the top former row that were either loose or completely displaced. The bolts and associated holes all had observable thread wear. All bolt heads were completely or partially intact; there was not complete separation at the head-to-shank interface on any of the three specimens. Stress corrosion cracking was ruled out as a factor in the mode of failure. Contributing causes were reported as elevated bolt stress near the thermal shield support block and bending stress on the bolts during normal steady state operation, but no specific root cause was identified.

Visual inspections of the barrel-former bolts under the requirements of MRP 2018-002 [48] at two plants with large clusters of degraded baffle-former bolts have been performed. One plant observed three barrel-former bolts with indications and the other plant did not observe any barrel-former bolt indications.

Thermal Shield Flexures—During the 2019 outage at the plant with degraded thermal shield support block bolts, cracklike indications and potential indications were detected on the thermal shield flexures [50]. These potential indications were later confirmed, along with degradation at an additional flexure. Five thermal shield flexures were found to be completely fractured at the inner flexure weld region during the fall 2020 refueling outage.

B&W Design Impact Damage—Vent valve damage has been observed at some units that was due to an interaction with the plenum assembly during insertion and removal activities. Items include jackscrew locking cups, vent valve bodies, and guide blocks. One vent valve was identified to have the key ring not engaged on both jackscrews. Vent valves are replaceable items and, as noted previously, have been replaced as necessary. In addition, one B&W unit identified a guide block bent outward from the lower grid shell forging. Marks on the guide block and core barrel stand leg indicate that the damage may have occurred during a previous outage when setting the core barrel in the stand.

Mechanism Unidentified to Date—Visual examinations at one B&W-designed unit in 2005 indicated that three or four internal baffle-to-baffle bolts were found protruding. The bolt heads extended beyond the baffle plate surface. This was an indication that the locking devices, and potentially the bolts as well, had failed. As noted earlier, a UT inspection of 100% of the baffle-former bolts was performed, with no detected indications of broken bolts. No UT inspection was performed on the internal baffle-to-baffle bolts, and the potentially failed baffle-to-baffle bolts have yet to be removed to confirm failure and, if failed, the mechanism of failure. As a result of the observations, AREVA (now Framatome) performed a unit-specific evaluation to assess operational and safety functions for continued operation. That evaluation included thermal hydraulic evaluation, structural evaluation, fuel evaluation, and loose parts evaluation.

Two B&W units inspecting the IMI guide tube spiders and spider-to-lower grid rib section welds identified four linear indications in spider legs adjacent to the weld. In addition, another indication was located in the Type 304 lower grid rib section below the weld. Framatome performed unit-specific analyses for these findings. The indication in the lower grid rib section has been reinspected multiple times over several years with no observed growth.

Reactor Internals Component Replacements—Replacement of upper internals in Westinghouse designs have been made.

Beginning in 2004, replacement of the complete internals (upper and lower internals) at three Japanese PWRs has been performed. It has been stated that these replacements have been performed for the following reasons:

- To keep and improve operational reliability, safety, and a high load factor for the nuclear power units
- To maintain the plant against aging degradation of the PWR internals
- To mitigate degradation risks that would rise with increasing operational time in the future

Appendix B: Guidance on Plant-Specific Applicability Related to Fuel Design or Fuel Management

The applicability criteria contained in this appendix have been maintained as written in MRP-227, Revision 1-A [18]. These criteria were originally provided in MRP 2013-025 [82] to address applicant/licensee action item (A/LAI) 1 from the safety evaluation on MRP-227-A [81] and have been implemented by the industry since. Continued operation into SLR can result in higher component fluence, but this has been addressed throughout Revision 2 of the MRP-227 guidelines.

MRP-227-A Applicant Licensee Action Item 1: MRP-227-A Applicability Guidelines for Combustion Engineering and Westinghouse Pressurized Water Reactor Designs (*Ref. WCAP-17780-P, MRP-2013-025, and ML14309A484*)

Several public meetings were held in 2012 and 2013 with the NRC staff to discuss NRC expectations and concerns regarding industry responses to MRP-227-A, A/LAIs 1 and 2. The concerns were addressed to owners of currently operating pressurized water reactor plants designed by Westinghouse and CE. At these meetings, the NRC, Westinghouse, EPRI, and utility representatives discussed regulatory concerns and determined a path for a comprehensive and consistent utility response to demonstrate applicability of MRP-227.

The information provided by the industry to the NRC staff demonstrated that the MRP-227 I&E guidelines are applicable for the range of conditions expected at the currently operating Westinghouse and CE-designed plants in the United States. As a result of the technical discussions with the NRC staff, this appendix was developed to provide utilities with the basis for a plant to respond to the NRC's Request for Additional Information (RAI) to demonstrate compliance with the basic technical applicability assumptions in MRP-227 for originally licensed and uprated conditions.

BACKGROUND

The safety evaluation (SE) issued on MRP technical report MRP-227, Revision 0, by the U.S. NRC contained eight A/LAIs. These eight action items must be completed in the implementation of the I&E Guidelines outlined in MRP-227-A.

On November 28, 2012, a public meeting was held at the NRC office to discuss staff expectations and concerns regarding industry responses to A/LAIs 1 and 2. The concerns were addressed to owners of currently operating pressurized water reactor plants designed by Westinghouse and CE. A series of proprietary and public meetings were conducted from January to June 2013. At these meetings, the NRC, Westinghouse, EPRI, and utility representatives discussed regulatory concerns and determined a path for a comprehensive and consistent utility response to demonstrate applicability of MRP-227.

Westinghouse summarized the proprietary meeting presentations and supporting proprietary generic design basis information in WCAP-17780-P and provided it to the NRC. WCAP-17780-P provides background proprietary design information regarding variances in stress, fluence, and temperature in the plants designed by Westinghouse and CE to support NRC reviews of utility submittals to demonstrate plant-specific applicability of MRP-227. NRC staff assessed this information provided in WCAP-17780-P and EPRI MRP-2013-025 as documented in ML14309A484 [60].

Plant-specific evaluation to demonstrate the applicability of MRP-227 for managing aging would need to consider the following items:

- Designated design specific criteria in responding to specific NRC RAIs
- Criteria defined in MRP-227, Section 2.4
- Plant-specific regulatory commitments for managing aging in PWR internals

The NRC staff subsequently stated that the information provided by the industry to the NRC staff demonstrated that the MRP-227 I&E guidelines are applicable for the range of conditions expected at the currently operating Westinghouse- and CE-designed plants in the United States.

As a result of the technical discussions with the NRC staff, the basis for a plant to respond to the NRC's RAI to demonstrate compliance with MRP-227 for originally licensed and uprated conditions was determined to be satisfied with plant-specific responses to the following question related to plant-specific fuel design and/or fuel management:

Question: *Does the plant have atypical fuel design or fuel management that could render the assumptions of MRP-227 regarding core loading/core design nonrepresentative for that plant?*

GUIDANCE ON PLANT-SPECIFIC APPLICABILITY DEMONSTRATION

Guidance for demonstrating compliance with MRP-227 conditions in responding to NRC questions and assessments for uprated conditions, if applicable, is provided in the following paragraphs.

Fuel Design or Fuel Management—Question Response Guidance: The MRP-227 inspection recommendations require extensive inspections of the components surrounding an active core. Additional inspection requirements are not anticipated. The aging degradation analysis completed in the development of MRP-227 indicated decreased degradation rates under the low leakage core loading assumptions assumed during the second 30 years of operation. To provide assurance that there would not be higher-than-anticipated rates of degradation in the later years of operation, MRP-227 guidance on applicability of the recommendations precludes return to out-in core loading patterns. MRP-227 does not provide a quantitative definition of out-in core loading that could be used to evaluate the potential impact on internals degradation. The primary impact of out-in core loading is increased rates of nuclear heat generation in the PWR internals.

Plant-specific fuel design or fuel management application were identified as having potential to invalidate the fluence, temperature, and stress assumptions used to develop MRP-227. The goal in the development of this guideline was to define a simple parameter to demonstrate that the assumptions of MRP-227 are representative of the plant. Subsection 4.3.2 of MRP-191 states:

> *The core power density that was assumed for projecting the fluence values for the Westinghouse plant was 104.5 W/cm^3. The core power density assumed in the analysis of the CE-designed plant was 83.0 W/cm^3. Higher core power densities result in higher neutron fluence values.*

The largest impact of changes in the fluence distribution on recommendations occurs in components near the lower bound fluence for susceptibility. Any limit on fluence or on the heat generation rate is effectively a limit on core power spatial distribution.

Three different boundaries were explored in developing this guideline:

1. Radial boundary (components laterally surrounding core)
2. Upper axial boundary (components above core)
3. Lower axial boundary (components below core)

Radial Boundary Limitations

The primary driver for the radial core power distribution is the MRP-227 basis of 30 years of "out-in" management, in which fresh fuel is placed in peripheral core locations, followed by operation with low leakage fuel management for the remainder of plant life. Any change in this scenario has the potential to affect reinspection, but not the initial inspection timing or affected components. Because of design similarities across the currently operating Westinghouse and CE U.S. fleet, in most, but not all, cases, internals component geometry is a secondary effect. Neutron flux and heating rate could be expected to vary by as much as a factor of 5, depending on radial core power distribution and absolute rated power.

Local effects at key locations are dominated by a few (typically 3–5) fuel assemblies located on the core periphery. There is no impact on the initial inspection, but a change from the low leakage operating characteristics could affect the MRP-227 reinspection recommendations. To provide assurance that there would not be higher-than-anticipated rates of degradation in the later years of operation, MRP-227 guidance on applicability of the recommendations precludes return to out-in core loading patterns. The limitations on power for demonstrating applicability in the peripheral assemblies provided in this guideline preclude return to the more damaging out-in core loading pattern.

Plant-specific applicability of MRP-227 in the radial direction with no further evaluation required is demonstrated by meeting the following limits:

CE: Heat generation figure of merit, $F \leq 68$ W/cm^3

Average core power density < 110 W/cm^3

Westinghouse: Heat generation figure of merit, $F \leq 68$ W/cm^3

Average core power density < 124 W/cm^3

The figure of merit (refer to MRP-2013-025 Figure 1), F, is given by:

$$F = Pavg\ (W1*R1 + W2*R2 + W3*R3 + W4*R4)$$

where:

Pavg = average core power density

W*i* = generic inside corner weighting factor (MRP-2013-025 Figures 1 and 2)

R*i* = relative fuel assembly power

The limiting core power values determined for the plant-specific assessment apply to operation beyond the first 30 years. Plants that do not meet these guidelines may require additional evaluation to demonstrate the applicability of the MRP-227-A recommendations. Plants that exceed the radial boundary limitations should evaluate the impact on the reinspection schedules for components in the Westinghouse baffle/former/barrel/shield or the CE core shroud/barrel/shield structure.

Upper Axial Boundary Limitations

The limitations for the upper axial components or components above the reactor core are based on the embrittlement input assumptions and dose limits evaluated in the MRP-227, Revision 2 basis documents, such as MRP-191, Revision 2 and MRP-232, Revision 2. The primary driver is the fuel assembly geometry, noting the position of the active fuel stack and the use of axial blankets.

Similar to the radial components due to design similarities across the fleet, in most cases, upper axial component geometry is a secondary effect. Contrary to the radial boundary components, out-in versus low leakage operation has only a small effect on the maximum exposure. Neutron flux and heating rate above the reactor core could be expected to vary in the fleet by as much as a factor of 4, depending on fuel assembly design, core power distribution, and absolute rated power. Variations could affect screening results for components above the core; some plants may exceed the screening criterion, others may not.

Plant-specific applicability of MRP-227 in the upper axial direction with no further evaluation required is demonstrated by meeting the following limits:

CE: Active fuel to fuel alignment plate distance > 12.4 in, (31.5 cm)

Average core power density < 110 W/cm^3

Westinghouse: Active fuel – upper core plate distance > 12.2 in. (31.0 cm)

Average core power density < 124 W/cm^3

Evaluations shall consider the entire plant operational period, original and extended life. Plants that exceed the limits for more than a cumulative two years of operation shall perform further evaluations to demonstrate compliance with this applicability requirement. A plant-specific analysis may be required to demonstrate that the fluence in the components above the core does not exceed the levels considered in MRP-191, Revision 2 and MRP-232, Revision 2. If this fluence limit is not met, an evaluation of potential irradiation effects in components immediately above the core plate may be required.

Lower Axial Boundary Limitations

The limits for the lower axial components or components below the reactor core were evaluated based on the MRP-175 and MRP-191 fluence threshold for irradiation embrittlement.

The parameters affecting the lower axial components are identical to those for the upper axial components. The primary driver is the fuel assembly geometry. Because of design similarities across the fleet, in most cases, lower axial component geometry is a secondary effect. Out-in versus low leakage operation has only a small effect on the maximum exposure. Neutron flux and the heating rate below the reactor core could be expected to vary in the fleet by as much as a factor of 4, depending on fuel assembly design, core power distribution, and absolute rated power. However, the variations do not affect the MRP-227 recommendations for managing aging for the lower axial components in the currently operating CE and Westinghouse fleets. Plant-specific applicability of MRP-227 in the lower axial direction with no further evaluation required is demonstrated by meeting the MRP-227, Section 2.4 criteria.

Extended Power Uprate (EPU)

Further consideration related to EPUs need to be addressed, specifically:

If the plant implemented an Extended Power Uprate (EPU), are the peak internal metal temperatures within the assumptions made in developing MRP-227?

If the plant implemented an EPU, all changes should be assessed against the plant-specific aging management review, AMP, and any other pertinent documents that support the aging management of PWR internals (including physical modifications to PWR internals supporting the EPU). The preceding question related to fuel design or fuel management should be evaluated for the EPU and responses should be provided as applicable.

If there were no physical modifications to the PWR internals as a result of the EPU, then the applicability requirements outlined earlier should be reexamined for EPU conditions. An EPU results in increases in average core power. The MRP-227 I&E guidelines should remain applicable as long as the previously discussed average core power and peripheral heat generation limits imposed remain bounding. If these criteria are not met, plant-specific evaluations may be required to demonstrate the applicability of the guideline.

Thus, the utility response with regard to the applicability of MRP-227 for the EPU condition should consist of appropriate text to identify the uprated plant condition and comparisons with the preceding criteria.

SUMMARY

To demonstrate plant-specific applicability of the MRP-227 sampling inspection strategy for managing aging in PWR internals, licensees must demonstrate that the criteria of MRP-227, Section 2.4 are met, and that the neutron fluence and heat generation rates are within the range of the following variables summarized. The limiting threshold values are as follows:

- Active fuel – upper core plate distance > 12.2 in. (30.0 cm) for Westinghouse plants
- Active fuel to fuel alignment plate distance > 12.4 in. (30.5 cm) for CE plants
- Average core power density < 124 W/cm^3 for Westinghouse plants
- Average core power density < 110 W/cm^3 for CE plants
- Heat generation figure of merit, F ≤ 68 W/cm^3 for both Westinghouse and CE

Plants that exceed the thresholds defined previously do not necessarily fall outside the MRP-227 recommendations; instead, they require additional evaluations to fully demonstrate plant-specific applicability. The limiting core power values apply to operation beyond the first 30 years and should be based on the full as-licensed operational (original and extended life) life of the plant.

A plant that maintains core loading patterns that meet the limits would satisfy the MRP-227 requirement to avoid operation above this limit. Short periods of operation (fewer than two years total) above this limit would not invalidate the requirement to not return to out-in fuel management. Plants that exceed these limits for more than a cumulative two years of operation would need to provide further evaluations to demonstrate compliance with this applicability requirement.

Appendix C: Options for Alternate Aging Management Approaches for Westinghouse and CE Designs

As the expected plant operating life increases to 80 years or longer, implementing a proactive replacement or modification strategy may be preferable over performing multiple inspections and risking unexpected degradation. Alternate strategies (for instance, repairs, replacements, modifications, remote condition monitoring) are permissible, but the impact on the affected component and on the overall RVI AMP must be considered. This impact on components and the AMP will typically be addressed through plant-specific evaluations and justifications because it is not possible in all cases to create a generic, one-size-fits-all option for these types of noninspection aging management approaches. The considerations in this section have also been provided in MRP-232, Revision 2, Section 2.6 [16]. Alternate aging management considerations associated with B&W-designed plants are addressed outside of this guidance on a unit-specific basis.

No alternate strategy (for example, repairs, replacements, modifications, remote condition monitoring) is "sitting on the shelf" ready for immediate deployment without additional work. Even for repairs, replacements, or modifications that have been performed in the past, some combination of plant-specific design and analysis, preparation of repair equipment and procedures, acquisition of replacement parts, and personnel training would be required. Even remote condition monitoring as an aging management strategy, such as neutron noise monitoring, would require application-specific justification [80]. As any particular alternate approach becomes more popular, the industry could consider creating generic evaluations and justifications for that case through the PWROG or other industry group. However, the wide variability in plant designs and potential proactive approaches makes it likely that case- and plant-specific evaluations and justifications will constitute most cases.

Alternate aging management evaluations and justifications must address at least the following three areas as part of showing continued applicability of the I&E guidelines for internals aging management:

- Impacts on the documented component groupings (that is, "waterfalls" or Primary–Expansion component relationships) related to the component or assembly being addressed
- Continued management of all the individual degradation mechanisms
- Incorporation of relevant issues based on operating experience

The alternate aging management strategy and the results of evaluations in these three areas must be incorporated into the plant's AMP and inspection program. The plant should also evaluate any potential impacts to downstream program implementation documentation and licensing submittals and commitments.

The following paragraphs provide an overview of each of the three evaluation areas along with some examples of how these areas could be affected by an alternate aging management strategy. Neither the overview description nor the examples should be considered limiting for those developing plant-specific evaluations in support of alternate RVI aging management approaches.

Impacts on Primary–Expansion Component Relationships

Evaluating the effect of an alternate approach on the documented Primary–Expansion component relationships is a first and obvious step in reconciling plant changes with application of the I&E guidelines. If a Primary component is replaced or repaired, it may no longer be a reasonable lead item for the particular component waterfall grouping. For redundant structures like bolts, a full replacement may lead to a different aging management strategy than a partial replacement. At a minimum, the following steps should be included in the evaluation of the impacts on the Primary–Expansion component relationships:

1. Select planned approach (for example, partial versus full replacement).
2. Review operating experience for prior experience with planned approach.
3. Evaluate precedence of lead component relationships.
    - Do the replaced or repaired components still lead the Expansion components?
    - For partial replacements, do the remaining original parts still lead the Expansion components?
4. Determine whether a new lead component is needed.
    - Is it appropriate to continue with remaining original Primary component parts as lead component items?
    - Is it appropriate to continue with replaced Primary parts as lead component items?

- Is it appropriate to move to the next Expansion component as the lead component item?
- Is it necessary to find an alternate Primary component as the lead component item?

5. Address any issues with sampling.
   - For partial replacements, do the remaining original parts constitute an adequate sample size?
   - For a promoted Expansion component, does the new inspection provide an adequate sample size?
6. Evaluate any impacts on managing all degradation mechanisms.
7. Update AMP.

Ultimately, this evaluation should conclude whether the aging management strategy will do the following:

- Continue to use the remaining original Primary component parts as lead components
- Use the replaced parts as Primary components
- Switch to using a downstream Expansion component as the lead item
- Implement an alternate component as the Primary item
- Determine whether the sample size for a particular component or set of redundant components is still adequate for a Primary inspection

The following examples provide additional clarity on the effects of alternate approaches:

- Full replacement of the baffle-former bolts (all bolts) will leave the expansion components (lower support column and barrel-former bolts) without a Primary component to be inspected.
- Partial replacement of the baffle-former bolts could affect the ability to manage aging in the Expansion components (lower support column and barrel-former bolts). Options include continued inspection of the remaining original baffle-former bolts, analysis to show that the replacement baffle-former bolts continue to lead the Expansion components, and expansion to inspect the lower support column bolts as a new Primary component.
- Replacement of the peripheral control rod guide tube assemblies could leave the plant with no easy way to sample the lower flange welds and monitor for potential degradation in the assemblies away from the periphery.
- Similar to the control rod guide tube assemblies, replacement or mitigation of potential degradation in the peripheral instrument guide tubes could leave the plant with no easy way to monitor for potential degradation in the guide tubes away from the periphery.

- Actions to mitigate the potential for cracking at the lead core barrel welds (perhaps peening, for example) would require evaluation to determine whether the Expansion components from those welds would continue to be managed by the Primary–Expansion component relationship.

Some of these cases have already occurred at individual plants, so a review of operating experience related to Primary–Expansion component relationship evaluations is recommended for any utility considering alternate aging management approaches.

Continued Management of Aging Degradation Mechanisms

Addressing the documented Primary–Expansion component relationships is only part of confirming that reactor vessel internals aging degradation is appropriately managed for extended operation. The basis of these I&E guidelines recognized the need to manage each of the eight aging degradation mechanisms detailed in Section 3.2. The strategy was not to inspect every component in the internals that is potentially susceptible to one of these aging degradation mechanisms. Rather, lead components were selected for inspection and monitoring based on susceptibility and groupings of related components. It is possible that after all Primary–Expansion component relationships are addressed for an alternate aging management approach, there could be an applicable aging degradation mechanism that is no longer managed by the new aging management strategy.

Consideration should be given not only to the degradation mechanism, but also to the degradation mechanism combined with a specific component type, such as a bolt or small weld. The evaluation and justification for an alternate approach to internals aging management must address each degradation mechanism and consider the impact for component groupings as well. Conversely, if it is determined that no additional components in the internals are subject to a particular aging-related degradation mechanism (for example, if a plant replaces the full lower internals, then void swelling may not be applicable again for an extended period of time), then justification can be developed for having no components selected to manage that mechanism.

At a minimum, the following steps should be included in the evaluation of continued aging management of each aging-related degradation mechanism:

1. Review aging degradation mechanism management as part of planning for alternate approach implementation.
2. Identify potential gaps in mechanism-component combination management.

3. Evaluate complete AMP to determine needs.
    - Mechanism-component combination is addressed by another current management action (inspection, monitoring, and so on)
    - Combination can be addressed by actions with the affected component or assembly
    - Combination can be addressed through addition of a new inspection
4. Perform evaluations to support the revised aging approach, if needed.
    - Examples: project degradation in an alternate component, compare neutron fluence projections of alternate and replaced component, disposition wear in the replaced component
5. Update AMP with revised aging approach based on consideration of managing the mechanism-component combination.

Examples include, but are not limited to, the following:

- For replacement of all control rod guide tube assemblies, the potential fatigue and SCC degradation should be considered to determine whether further actions are required to continue managing those degradation mechanisms in similar types and sizes of structures.
- If all the Primary and Expansion component bolting in a Westinghouse-designed plant is replaced (baffle-former, baffle-edge, lower support column, and barrel-former bolts), degradation of other less susceptible bolts should be considered to ensure that fatigue or SCC of bolting continues to be managed.
- For a full lower internals replacement, the components affected by void swelling are all new and would not require void swelling monitoring for an extended period of time, but components closest to the core in the upper internals assembly (or upper guide structure) must be considered for potential long-term effects of void swelling because the lead items are no longer being managed for the degradation mechanism.

In addition, if a modification introduces a new lead location for a degradation mechanism, this must be evaluated and justified for continued application of the I&E guidelines for the RVI AMP.

Incorporation of Relevant Operating Experience

As a living program, the I&E guidelines are periodically updated to incorporate developing industry knowledge and the latest internals OE. An AMP at an individual plant should also consider the impacts of operating experience on its strategies. This is particularly true when a strategy not specifically considered in the I&E guidelines is being implemented, because the guideline may not have considered that approach in detail or may not evaluate the applicable operating experience.

Examples of relevant operating experience for alternate approaches include, but are not limited to, the following:

- Aging degradation of replacement baffle-former bolts for a proactive replacement campaign
- Increased radiation exposure of the reactor vessel if the thermal shield were to be removed
- Replacement of a 304 SS hold down spring with a 403 SS hold down spring
- Neutron noise as a remote condition monitoring technique for identification of thermal shield flexure degradation [80]
- Impacts on the other half of a wear couple when a component with concerns for wear is replaced with a more wear-resistant material (such as the replacement of control rods with surface-hardened material causing accelerated wear of the guide cards in Westinghouse-designed plants)

The link between plant modifications, repairs, or replacements and the impact on the current I&E guidelines is not always obvious or direct. Thus, it is recommended that the update to the aging management program for an alternate approach include a thorough review of o perating experience and that the utility consider consultation with the original equipment manufacturer for additional operating experience and lessons learned.

It is recommended that the operating experience review and aging management program update be conducted prior to implementing an alternate aging management approach, if possible.

Appendix D: Guidance for Flexible Power Operation of Westinghouse and CE Designs

In recent years, wind and solar electric power generation have been introduced into the electric grid, causing a number of domestic and foreign utilities operating nuclear power plants to consider operating their nuclear power plants as load-following units. Several plants have already begun flexible operation, reducing power output in response to the needs of the local electric grid. This new operational characteristic is in response to the intermittent nature of electric power generation of renewables, such as wind and solar without energy storage.

However, one of the basic assumptions and applicability requirements of these I&E guidelines is that the plant operates as a base-loaded unit. Base load operation is defined here as operation without any power reductions for the purpose of following the needs of the grid, whether those operations are daily, weekly, monthly, or some other frequency. Power reductions due to reactor trips, refueling outages, and other transients covered in the design basis are included in this definition of base load. Therefore, utilities that have already implemented or plan to implement flexible operation must either perform a plant-specific justification for why this applicability criterion has been met or develop a plant-specific RVI AMP to meet the requirements of license renewal.

This appendix provides guidance to assist Westinghouse plants that have implemented or plan to implement flexible operations and is based on the evaluation described in MRP 2019-002 [71]. According to the EPRI report *Westinghouse and Combustion Engineering Fleet Nuclear Power Plant Operational Variables During Load-Following Operations* [72], CE-designed reactor vessel internals are substantially less susceptible to flexible operation than the Westinghouse-designed internals and would not be impacted by flexible operation as long as the CE unit operates within its design transient cycles. Flexible operations associated with B&W-designed plants are addressed outside this guidance on a unit-specific basis.

Three different flexible operation transients are considered in this appendix:

- Case 1: 100% to 80% thermal power change at 5% thermal power per minute
- Case 2: 100% to 70% thermal power change at 5% thermal power per minute
- Case 3: 100% to 30% thermal power change at 5% thermal power per minute

The requirements for each of these three cases are described in the following subsections and are based on an assessment of the impact of flexible operation on baffle-former bolt (BFB) fatigue because the BFBs are expected to be the lead Westinghouse component for fatigue [71, 72]. These I&E guidelines are based on a lead component approach to managing aging; this same approach can be applied to managing the fatigue that would be induced by flexible operations.

The screening criteria used for each case are provided in Table D-1 for plants that contain baffle-edge bolts and Table D-2 for plants that do not contain baffle-edge bolts. For the EFPY columns of these tables, the flexible operation must have been weekly or less than weekly to apply the weekly column or daily or less than daily to apply the daily column. An out-in core loading pattern and a low leakage core loading pattern were considered for each case. The screening criteria provided for each case are applicable to flexible operation accumulated during both initial license operation and first license extension. Therefore, if a plant has performed flexible operation early in life, flexible operation events from that previous operation must be added to the event counts from current or future planned operation. Furthermore, plant-specific screening criteria can be developed and justified at a utility's discretion and used in place of the criteria provided in Table D-1 and Table D-2.

Table D-3 summarizes the components screened in for fatigue for the Westinghouse internals based on MRP-191, Revision 1 [73], which formed the fatigue screening basis for the flexible operation evaluation described in MRP 2019-002 [71]. This table also lists the final categorization applied to the components by the MRP-191, Revision 1 expert panel. The screening threshold for fatigue used by the MRP-191, Revision 1 expert panel was a cumulative usage factor (CUF) of 0.1 at 40 years (for evaluations for the first period of extended operation to 60 years) [73], consistent with MRP-175, Revision 0 [74]. The screening threshold for fatigue was changed in MRP-175, Revision 1 [9] to account for the potential impact of environmental effects. The potential effects of environmentally assisted fatigue (EAF) could reduce the fatigue life of RVI components by a factor of 14. This resulted in the fatigue screening threshold being a CUF at 40 years of 0.036, when considering 80 years of operation. Significantly more components screen in for fatigue in MRP-191, Revision 2 [12] because of this smaller screening threshold.

However, the lead components listed in this section will also be affected by EAF and are expected to remain the lead components. Thus, it is not necessary to consider the effect of EAF when determining the lead component affected by flexible operation.

The MRP-191, Revision 1 expert panel determined that among the components subject to potential fatigue degradation, only a limited list of components should be assigned to the highest risk category, C. The reactor vessel internals components listed in Table D-3 are the lead items that will be affected by flexible operation. As noted previously, the BFBs are expected to be the leading component item for fatigue for all Westinghouse internals components, including those listed in Table D-3.

Case 1: 100% to 80% thermal power change at 5% thermal power per minute

According to Table D-1 and Table D-2, the Case 1 flexible operation of a 100% to 80% thermal power change at 5% thermal power per minute has little impact on the BFBs both in the out-in condition and the low leakage condition. A plant that has implemented flexible operation, in which the reduction in power does not go below 80% and the rate of the reduction or of the increase back to 100% does not exceed 5% per minute, can continue to implement the MRP-227 guidance with no changes. This applies whether the plant performed these flexible operations during out-in or low leakage operation, and it applies whether the plant has used this type of flexible operation in the past, is currently using it, or implements this level of flexible operation in the future. This is applicable to the first period of extended operation up to 60 calendar years of operation. These conclusions are consistent with documented results [72].

Case 2: 100% to 70% thermal power change at 5% thermal power per minute

According to Table D-1 and Table D-2, the Case 2 flexible operation of a 100% to 70% thermal power change at 5% thermal power per minute has a larger impact on the BFBs compared with Case 1, both in the out-in condition and the low leakage condition. For weekly cycling, the allowable number of EFPY is well beyond a plant life of 60 years in all combinations considered (out-in or low leakage core loading and with or without edge bolts). More frequent cycling can, however, result in the flexible operation screening criterion being reached within design life-relevant time frames. The daily cycling EFPY limits demonstrate this in both tables.

A plant that has implemented flexible operation in which the reduction in power does not go below 70% and the rate of the reduction or of the increase back to 100% does not exceed 5% per minute can continue to implement the MRP-227 guidance herein with no changes as long as the number of cycles or the relevant number of EFPY provided in Table D-1 or Table D-2 are not exceeded. This is applicable to the first period of extended operation, up to 60 calendar years of operation.

If the allowable number of fatigue cycles or relevant EFPY will be exceeded before the end of plant life, including first license extension, or has already been exceeded, additional actions beyond those specified in the MRP-227 guidance are required. These additional actions could include a plant-specific or bounding evaluation of the lead components for fatigue listed in Table D-3, or the action could be to perform accelerated inspections of the confirmed lead component for the plant design. For Westinghouse plants, this would be an accelerated inspection of the BFBs supported by an evaluation to justify the adjusted inspection timing and the re-inspection interval. See the later subsection, *Reinspection Interval Requirements,* for guidance on determination of the reinspection interval. This is applicable to the first period of extended operation, up to 60 calendar years of operation.

Case 3: 100% to 30% thermal power change at 5% thermal power per minute

According to Table D-1 and Table D-2, the Case 3 flexible operation case of 100% to 30% thermal power change at 5% thermal power per minute has a large impact on the BFBs both in the out-in condition and the low leakage condition. For weekly cycling with an out-in core loading pattern, the allowable number of EFPY in all cases is less than 2 EFPY. For daily cycling, the screening criterion is reduced to less than 0.5 EFPY in all cases shown by the tables.

A plant that has implemented flexible operation in which the reduction in power does not go below 30% and the rate of the reduction or of the increase back to 100% does not exceed 5% per minute can continue to implement the MRP-227 guidance with no changes as long as the number of cycles or the relevant number of EFPY provided in Table D-1 or Table D-2 are not exceeded. This is applicable to the first period of extended operation, up to 60 calendar years of operation.

If the allowable number of fatigue cycles or relevant EFPY will be exceeded before the end of plant life, including first license extension, or has already been exceeded, additional actions beyond those specified in the MRP-227 guidance are required. These additional actions could include a plant-specific or bounding evaluation of the lead components for fatigue listed in Table D-3, or the action could be to perform accelerated inspections of the confirmed lead component for the plant design. For Westinghouse plants, this would be an accelerated inspection of the BFBs supported by an evaluation to justify the adjusted inspection timing and the re-inspection interval. See the later subsection, *Reinspection Interval Requirements* for guidance on determination of the reinspection interval. This is applicable to the first period of extended operation, up to 60 calendar years of operation.

Table D-1
Fatigue operational limits for cases with edge bolts installed

Core Loading Pattern	Flexible Operation Case	Number of Allowable Fatigue Cycles	EFPY with Weekly Cycling	EFPY with Daily Cycling
Out-in	100% to 80%	Below endurance limit	Below endurance limit	Below endurance limit
	100% to 70%	4879	93.8	13.4
	100% to 30%	81	1.6	0.2
Low leakage	100% to 80%	Below endurance limit	Below endurance limit	Below endurance limit
	100% to 70%	7246	139.3	19.8
	100% to 30%	105	2.0	0.3

Table D-2
Fatigue operational limits for cases with no edge bolts installed

Core Loading Pattern	Flexible Operation Case	Number of Allowable Fatigue Cycles	EFPY with Weekly Cycling	EFPY with Daily Cycling
Out-in	100% to 80%	Below endurance limit	Below endurance limit	Below endurance limit
	100% to 70%	4174	80.3	11.4
	100% to 30%	74	1.4	0.2
Low leakage	100% to 80%	Below endurance limit	Below endurance limit	Below endurance limit
	100% to 70%	6,819	131.1	18.7
	100% to 30%	105	2.0	0.3

Table D-3
Westinghouse RVI components screened in for fatigue [71, 73]

Component	Material	MRP-191, Rev. 1 Category
Control rod guide tube assemblies and flow downcomers		
Flanges, intermediate	304 SS CF8	A A
Flanges, lower	304 SS CF8	A B
Guide plates/cards	304 SS 316L SS CF8	C C C
Guide tube support pins	X-750 316 SS	C A
Upper core plate and fuel alignment pins		
Upper core plate	304 SS	B
Protective skirt bolts	316 SS	A
Upper support column assemblies		
Bolts	316 SS	A
Upper support plate assembly		
Inverted top hat flange	304 SS	A
Upper support ring or skirt	304 SS CF8	B B
Baffle and former assembly		
Baffle-edge bolts	316 SS 347 SS	C C
Baffle-former bolts	316 SS 347 SS	C C
Barrel-former bolts	316 SS 347 SS	C C
Bottom-mounted instrumentation (BMI) column assemblies		
BMI column bodies	304 SS	B
BMI column bolts	316 SS	A
BMI column extension tubes	304 SS	B
BMI column nuts	304 SS	A
Core barrel		
Core barrel outlet nozzles	304 SS	B
Irradiation specimen guides		
Irradiation specimen guide bolts	316 SS	A

Table D-3 (continued)
Westinghouse RVI components screened in for fatigue [71, 73]

Component	Material	MRP-191, Rev. 1 Category
Lower core plate and fuel alignment pins		
Lower core plate, fuel alignment pin bolts	316 SS	A
Lower core plate	304 SS	B
XL lower core plate	304 SS	B
Lower support column assemblies		
Lower support column bolts	304 SS 316 SS	B B
Neutron panels/thermal shield		
Neutron panels/thermal shield	316 SS	A
Thermal shield bolts	316 SS	A
Thermal shield flexures	304 SS 316 SS	B B

Other Cases

The following cases are not covered here and require further evaluation to address:

- Flexible operation that exceeds the 5% per minute thermal power change for any level of overall power change
- Flexible operation for a power change that goes below the 30% power level evaluated in Case 3 (100% to 30% power change)
- Flexible operation beyond 60 years of plant life

In addition, given the current information available from this work, any power changes that fall between 30% and 70% must be treated in the same way as the 30% case. Any power changes that fall between 70% and 80% must be treated in the same way as the 70% case. This is conservative for many of the cases in between, but further evaluation would be required to reduce that conservatism.

Reinspection Interval Requirements

Westinghouse and CE-designed plants that are not currently using flexible operation can continue to implement the reinspection intervals for the MRP-227 components with no changes. This applies whether the fatigue damage screening criteria of Table D-1 or Table D-2 have been exceeded or have not been exceeded, because reinspection periods were determined based on the rate of damage accumulation, and base load operation was assumed in determining the original reinspection intervals.

Plants that are currently using flexible operation fall into two categories:

- Plants that have exceeded the fatigue damage screening criteria of Table D-1 or Table D-2 may have to inspect more frequently than specified in the MRP-227 guidance. A plant-specific or bounding fatigue evaluation consistent with the requirements of the MRP-227 guidance and NUREG-1801 [5] must be performed to determine the revised reinspection interval for the lead components for fatigue listed in Table D-3 or for the confirmed lead component for the plant design. This revised reinspection interval cannot exceed 10 years.
- Plants that have not exceeded the fatigue damage screening criteria of Table D-1 or Table D-2 can continue to implement the reinspection requirements of the MRP-227 guidance with no changes as long as the fatigue damage is not predicted to exceed the screening criteria before the next scheduled inspection.
    - If the fatigue damage is predicted to exceed the screening criteria before the next scheduled inspection, a plant-specific or bounding fatigue evaluation consistent with the requirements of the MRP-227 guidance and NUREG-1801 [5] must be performed to determine the revised reinspection interval for the lead components for fatigue listed in Table D-3 or for the confirmed lead component for the plant design. This revised reinspection interval cannot exceed 10 years.

Expansion Inspection Requirements

Westinghouse- and CE-designed plants that are not currently using flexible operation can continue to implement the Expansion requirements of the MRP-227 guidance with no changes. This applies whether the fatigue damage screening criteria of Table D-1 or Table D-2 have been exceeded or have not been exceeded, because the Expansion requirements were determined based on a base load assumption.

Plants that are currently using flexible operation with power decreases below 80% will continue to apply the Expansion criteria of the MRP-227 guidance. However, once degradation exceeding the Expansion trigger criterion for the confirmed lead component for fatigue is observed, a plant-specific or bounding evaluation consistent with the requirements of MRP-227 and NUREG-1801 [5] must be performed for the other reactor vessel internals components potentially susceptible to fatigue. The applicable components are those components susceptible to fatigue listed in Table D-3.

Appendix E: Incorporation of Interim Guidance from MRP 2018-022 into MRP-227, Revision 2

MRP 2018-022 [84] was developed to provide interim guidance for subsequent license renewal prior to the publication of MRP-227, Revision 2. The guidance developed for the Westinghouse- and CE-designed RVIs was based on the current state of knowledge from the EPRI Materials Reliability Program (MRP) projects developing the guidance for SLR. The guidance was categorized into the NEI 03-08 Needed and Good Practice categories and has been incorporated here. The following subsections discuss the incorporation of the Needed requirements [84] for the Westinghouse and CE fleet into the current report. The Good Practice recommendations, which are based on asset management, are also discussed.

NEI 03-08 Needed Revisions from MRP 2018-022—Westinghouse Primary Components

Table E-1 shows the suggested inspection for the clevis insert bolts and dowels for the Westinghouse design from MRP 2018-022 [84]. Considering the screening results of MRP-191, Revision 2 [12], MRP-232, Revision 2 [16] recommended that the inspection of the clevis insert dowels be eliminated since inspection of the clevis insert bolts was the main concern. It was recommended [16] and confirmed in the MRP-227 peer review [85] that the inspection of the clevis insert bolts be categorized as an Existing inspection and incorporated into the clevis bearing Stellite wear surface item in Table 4-9 of this report (as shown in Table E-2). A reference to TB-14-5 [56] was added to provide additional information regarding possible visual indications that clevis bolting failure may have occurred.

Table E-1
Suggested entry for Westinghouse clevis insert bolts and dowels from MRP 2018-022

Primary Item	Applicability	Effect (Mechanism)	Expansion Link	Examination Method/Frequency	Examination Coverage
Alignment and Interfacing Components Clevis insert bolts Clevis insert dowels	All plants	Cracking (SCC), loss of material (wear)	None	Visual (VT-3) examination no later than two refueling outages from the beginning of the first license renewal period. Subsequent examinations at a 10-year interval	All clevis insert bolts and clevis insert dowels

Table E-2 shows the final MRP-227, Revision 2 inspection for the clevis insert bolts and is the same as the entry in Table 4-9.

Table E-2
Final MRP-227, Revision 2 entry for clevis insert bolts

Item	Applicability	Effect (Mechanism)	Reference	Examination Method	Examination Coverage
Alignment and Interfacing Components Clevis bearing Stellite wear surface Clevis insert bolts (Note 1)	All plants (see TB-14-5 [56])	Loss of material (wear) Cracking (SCC)	ASME Code Section XI as supplemented by TB-14-5 [56] (Note 1)	Visual (VT-3) examination	All accessible surfaces at specified frequency

Note:

1. The clevis inserts are attached to integrally welded reactor vessel lugs and the inserts are bolted to the lugs. The ASME Code examination of accessible surfaces is considered to include all details of the clevis configuration, including the bolting and locking devices. The bolting is fabricated from nickel-based materials and is susceptible to SCC. Although failure of the bolting does not itself cause loss of support function, asset impairment or issues with core barrel removal are a subsequent possibility. Westinghouse technical bulletin TB-14-5 [56] provides additional information regarding possible visual indications that clevis bolting failure may have occurred. This information should be reviewed to ensure a heightened awareness of the examiners is applied to this Code inspection.

The recommended inspection for the thermal sleeves for the Westinghouse design from MRP 2018-022 [84] is shown in Table E-3. Because the inspection of the thermal sleeves is tied to the ISI head inspections, it was recommended [85] that the inspection be considered Existing and moved to Table 4-9. The applicability was updated to include Nuclear Safety Advisory Letter (NSAL)-18-1 [52] because this NSAL includes plants that are considered to have a higher susceptibility of thermal sleeve flange wear. Based on the recommendations of the MRP-227 peer review [85], the examination coverage was limited to only thermal sleeves at locations with control rods. It was also recommended [85] to not list all the PWROG references but, instead, reference the NEI-03-8 needed inspection guidance, MRP 2018-027 [54], and the information notice issued by the NRC (IN 2018-010 [53]). The examination method and frequency were updated in MRP-232, Revision 2 [16] to be based on MRP 2018-027

[54] and NSAL-18-1 [52], which is consistent with Westinghouse Letter, LTR-AMLR-20-96, Revision 0 [85]. The final entry for MRP-227, Revision 2 for the thermal sleeves is shown in Table E-4 and is the same as the entry in Table 4-9.

Table E-3
Suggested entry for Westinghouse thermal sleeves from MRP 2018-022

Primary Item	Applicability	Effect (Mechanism)	Expansion Link	Examination Method/ Frequency	Examination Coverage
Alignment and Interfacing Components Thermal sleeves	All plants with thermal sleeves	Loss of material (wear)	None	Volumetric (UT) examination according to the requirements and initial inspection timing of TB-07-02 [75] and WCAP-16911-P [83] Measurement of thermal sleeve guide funnels height according to the requirements and timing of TB-07-02 and PWROG-16003-P [76] Subsequent examinations based on calculated wear projections	Thermal sleeve wear surfaces according to the requirements of TB-07-02 [75], WCAP-16911-P [83], and PWROG-16003-P [76]

Table E-4
Final MRP-227, Revision 2 entry for Westinghouse thermal sleeves

Item	Applicability	Effect (Mechanism)	Reference	Examination Method	Examination Coverage
Aligning and Interfacing Components Thermal sleeves	All plants with thermal sleeves (see NSAL-18-1 [52])	Loss of material (wear)	MRP 2018-027 [54] IN 2018-010 [53] OG-19-101 [77]	Per the requirements of PWROG-16003-P [76]	All thermal sleeves at locations with control rods

Table E-5
Suggested entry for Westinghouse radial support keys from MRP 2018-022

Primary Item	Applicability	Effect (Mechanism)	Expansion Link	Examination Method/Frequency	Examination Coverage
Radial Support Keys Radial support keys	All plants	Loss of material (wear)	None	Visual (VT-3) examination no later than 2 refueling outages from the beginning of the first license renewal period. Subsequent examinations on a ten-year interval	Wear surfaces on all radial support keys

The recommended inspection for the radial support keys for the Westinghouse design from MRP 2018-022 [84] are shown in Table E-5. The MRP-232 expert panel [86] recommended moving this to an Existing inspection and crediting the ASME Code Section XI inspections. Consistent with recommendations [86], the examination frequency [84] was updated to be consistent with the ASME Code Section XI inspections. The final MRP-227, Revision 2 inspection is shown in Table E-6 and is the same as the entry in Table 4-9.

Table E-6
Final MRP-227, Revision 2 entry for Westinghouse radial support keys

Item	Applicability	Effect (Mechanism)	Reference	Examination Method	Examination Coverage
Radial Support Keys Radial support keys	All plants	Loss of material (wear)	ASME Code Section XI	Visual (VT-3) examination	All accessible surfaces at specified frequency

Table E-7
Suggested entry for Westinghouse clevis bearing Stellite wear surfaces from MRP 2018-022

Primary Item	Applicability	Effect (Mechanism)	Expansion Link	Examination Method/Frequency	Examination Coverage
Alignment and Interfacing Components Clevis bearing Stellite wear surfaces	All plants	Loss of material (wear)	None	Visual (VT-3) examination no later than 2 refueling outages from the beginning of the first license renewal period. Subsequent examinations at a 10-year interval.	Wear surfaces on all clevis inserts

The recommended inspection for the clevis bearing Stellite wear surfaces for the Westinghouse design from MRP 2018-022 [84] is shown in Table E-7. The MRP-232 expert panel [86] recommended the inspection of this component remain as Existing and credit the ASME Code Section XI VT-3 exams. The examination frequency was updated to be consistent with the ASME Code Section XI ISI inspections. This component is included with the Existing clevis insert bolt inspection shown in Table E-2 of this appendix and included in Table 4-9.

Table E-8
Suggested entry for Westinghouse bracket bolts and corner bolts from MRP 2018-022

Primary Item	Applicability	Effect (Mechanism)	Expansion Link	Examination Method/Frequency	Examination Coverage
Baffle-Former Assembly Baffle-edge bolts Bracket bolts[1]	All plants with baffle-edge bolts or bracket bolts	Cracking (IASCC, fatigue) that results in: • Lost or broken locking devices • Failed or missing bolts • Protrusion of bolt heads Aging management (IE and ISR)	None	Visual (VT-3) examination, with baseline examination between 20 and 40 EFPY, and subsequent examinations at a 10-year interval.	Bolts and locking devices on high fluence seams 100% of components accessible from core side
Baffle-Former Assembly Baffle-former bolts Corner bolts[2]	All plants (corner bolts are only applicable to some plants)	Cracking (IASCC, fatigue) Aging management (IE and ISR)	Lower support column bolts Barrel-former bolts	Examination according to the requirements of MRP 2017-009 [78]	100% of accessible bolts

Notes:
1. Bracket bolts are applicable only to 4-loop plants originally designed for downflow configuration.
2. Corner bolts are applicable only to the 3-loop design plants that include corner angle baffle plates.

The recommended inspection for the bracket bolts and corner bolts for the Westinghouse design from MRP 2018-022 [84] is shown in Table E-8. This suggested change explicitly added the bracket bolts and corner bolts as Primary items, grouping the bracket bolts with the baffle-edge bolts and the corner bolts with baffle-former bolts. MRP-232, Rev. 2 [16] screened out fatigue as a cracking mechanism for the baffle-former assembly and combined the bracket bolts and the corner bolts with the baffle plate inspection. The reference to MRP 2017-009 [78] was not included because it is specific to baffle-former bolts. Table E-9 shows the final inspection for the bracket bolts and corner bolts and is the same as the entry in Table 4-3.

Table E-9
Final MRP-227, Revision 2 entry for Westinghouse bracket bolts and corner bolts

Primary Item	Applicability	Effect (Mechanism)	Expansion Link	Examination Method/Frequency	Examination Coverage
Baffle-Former Assembly Assembly (includes baffle plates, bracket bolts [if applicable], corner bolts [if applicable], and indirect effects of void swelling in former plates)	All plants	Distortion (void swelling) or cracking (IASCC) that results in: • Abnormal interaction with fuel assemblies • Gaps between plates • Vertical displacement of baffle plates • Broken or damaged bolts	None	Visual (VT-3) examination to check for evidence of distortion, with baseline examination no later than 40 EFPY and subsequent examinations at a 10-year interval.	Core side surface: • High fluence baffle joints • Top and bottom edge of baffle plates • Bolts and locking devices

Suggested New Entries from MRP 2018-022—Westinghouse Existing Components

The recommended Existing inspection for the upper and lower fuel alignment pins for the Westinghouse design from MRP 2018-022 [84] is shown in Table E-10. These components were added as new Existing inspections in MRP-227, Revision 2 with minor editorial changes, examination method clarification consistent with [16], and the addition of TB-16-4 [59] as shown in Table E-11 and are the same as the entry in Table 4-9.

Table E-10
Suggested entry for Westinghouse upper and lower fuel alignment pins from MRP 2018-022

Item	Applicability	Effect (Mechanism)	Reference	Examination Method	Examination Coverage
UCP and Fuel Alignment Pins Fuel alignment pins	All plants with Malcomized fuel alignment pins on the UCP (see TB-16-4 [59])	Loss of material (wear)	ASME Code Section XI	Visual (VT-3) examination	All accessible surfaces at specified frequency
LCP and Fuel Alignment Pins Fuel alignment pins	All plants with Malcomized fuel alignment pins on the LCP (see TB-16-4 [59])	Loss of material (wear)	ASME Code Section XI	Visual (VT-3) examination	All accessible surfaces at specified frequency

Table E-11
Final MRP-227, Revision 2 entry for Westinghouse upper fuel alignment pins

Item	Applicability	Effect (Mechanism)	Reference	Examination Method	Examination Coverage
Upper Internals Assembly Upper fuel alignment pins	All plants with Malcomized fuel alignment pins (see TB-16-4 [59])	Loss of material (wear)	ASME Code Section XI as supplemented by TB-16-4 [59]	Visual (VT-3) examination to determine general condition for excessive wear	All accessible surfaces at specified frequency
Lower Internals Assembly Lower fuel alignment pins	All plants with Malcomized fuel alignment pins (see TB-16-4 [59])	Loss of material (wear)	ASME Code Section XI as supplemented by TB-16-4 [59]	Visual (VT-3) examination to determine general condition for excessive wear	All accessible surfaces at specified frequency

Suggested New Entries from MRP 2018-022—Combustion Engineering Primary Components

The recommended inspection for the welded core shroud assembly for the CE design from MRP 2018-022 [84] is shown in Table E-12. The MRP-232 Expert panel [86] agreed that the inspection should focus on the horizontal seam between the upper and lower shroud segments. This area is expected to experience higher fluence and higher temperature compared to the seam at the lower core shroud segment and the core support plate. The note related to consideration of supplementary measurements of any observed gap opening was maintained for consistency with MRP-227, Revision 1-A [18]. The final MRP-227, Revision 2 Primary inspection for the welded core shroud assembly is shown in Table E-13 and is the same as the entry in Table 4-2.

Table E-12
Suggested entry for CE core shroud assembly from MRP 2018-022

Primary Item	Applicability	Effect (Mechanism)	Expansion Link	Examination Method/Frequency	Examination Coverage
Core Shroud Assembly (Welded) Assembly	Plant designs with core shrouds assembled in two vertical sections	Distortion (void swelling), as evidenced by measurable separation between the upper and lower core shroud segments or by shifting of the segments relative to one another or the core support plate Aging management (IE)	None	Visual (VT-1) examination no later than two refueling outages from the beginning of the first license renewal period. Subsequent examinations at a 10-year interval	100% of the horizontal seam between the upper and lower core shroud segments 100% of the seam between the lower core shroud segment and the core support plate

Table E-13
Final MRP-227, Revision 2 entry for CE core shroud assembly

Primary Item	Applicability	Effect (Mechanism)	Expansion Link	Examination Method/Frequency	Examination Coverage
Core Shroud Assembly (Welded) Assembly	Plant designs with core shrouds assembled in two vertical sections	Distortion (void swelling), as evidenced by measurable separation between the upper and lower core shroud segments Aging management (IE)	None	Visual (VT-1) examination no later than two refueling outages from the beginning of the license renewal period. Subsequent examinations at a 10-year interval	100% of the horizontal seam between the upper and lower core shroud segments. (Note 1)

Note:

1. If evidence of distortion is detected by visual exam, consideration should be given to making supplementary measurements (minimum of 3 to 5, depending on extent of observed condition) of gap opening between the upper and lower core shroud segments.

Table E-14
Suggested entry for CE lower cylinder girth welds from MRP 2018-022

Primary Item	Applicability	Effect (Mechanism)	Expansion Link	Examination Method/Frequency	Examination Coverage
Core Support Barrel Assembly Lower cylinder girth welds (Note 1)	All plants	Cracking (SCC, IASCC) Aging management (IE)	Lower cylinder axial welds Fuel alignment plate (plant designs with core shrouds assembled in two vertical sections only)	Enhanced visual (EVT-1) examination no later than two refueling outages from the beginning of the first license renewal period. Subsequent examinations at a 10-year interval	100% of the accessible surfaces of the lower cylinder welds.

Note:

1. Under MRP-227, Revision 1, this component would be the core support barrel assembly middle girth weld (MGW) with expansions to the middle axial weld (MAW) and lower axial weld (LAW). Per the responses to NRC RAIs on MRP-227, Revision 1, the core support columns could also become an expansion to the MGW. Once MRP-227, Revision 1 has received a safety evaluation with acceptance of these changes, revisions to the naming of the Primary and Expansion components for the MRP-227-A "lower cylinder girth welds" provided in the approved version of MRP-227, Revision 1 should be substituted here.

The recommended inspection for the lower cylinder girth welds for the CE design from MRP 2018-022 [84] is shown in Table E-14. The main difference between this entry and previous entries for the lower cylinder girth welds is the expansion to the fuel alignment plate. As indicated in the note [84], based on RAIs from the NRC, the core support columns could also become an expansion to the middle girth weld (MGW). The final inspection specified in MRP-227, Revision 2 (shown in Table E-15 and Table 4-2) incorporates the expansion to the specified core support columns, middle axial weld (MAW), lower axial welds (LAW), and fuel alignment plate specified in MRP 2018-022 [84]. The final inspection in

MRP-227, Revision 2 also includes the update to the naming convention (middle girth weld) and clarification of the examination coverage to include 0.75 in. (1.91 cm) of the adjacent base metal. The examination method includes the option for volumetric (UT) or surface (ET) examinations consistent with reference 16.

Table E-15
Final MRP-227, Revision 2 entry for CE core support barrel middle girth weld

Primary Item	Applicability	Effect (Mechanism)	Expansion Link	Examination Method/Frequency	Examination Coverage
Core Support Barrel Assembly Middle girth weld (MGW)	All plants	Cracking (SCC, IASCC) Aging management (IE)	Middle axial weld (MAW) Lower axial weld (LAW) Core support columns Fuel alignment plate (SLR only)	Enhanced visual (EVT-1), volumetric (UT), or surface (ET) examination no later than two refueling outages from the beginning of the license renewal period. Subsequent examinations at a 10-year interval (Note 1)	100% of the accessible weld length of the OD of the MGW and 0.75 in. (1.91 cm) of adjacent base metal shall be examined (Note 2)

Notes:
1. UT or ET examination of core barrel welds must be supported by a technical justification developed per MRP-228.
2. Examination coverage requires a minimum of 75% of the length of OD of the weld being examined.

Table E-16
Suggested entry for CE core shroud tie rods from MRP 2018-022

Primary Item	Applicability	Effect (Mechanism)	Expansion Link	Examination Method/Frequency	Examination Coverage
Core shroud assembly (welded) Core shroud tie rods	All plants with core shroud tie rods	Cracking IASCC, fatigue), loss of material (wear), distortion (void swelling) Aging management (IE and ISR/IC)	Welded core shroud assembly	Visual (VT-3) examination no later than two refueling outages from the beginning of the first license renewal period. Subsequent examinations during every refueling outage.	Examination of the top end of 100% of the core shroud tie rods. Top-down and side views of each tie rod must be obtained.

The recommended inspection for the core shroud tie rods and nuts for the CE design from MRP 2018-022 [84] is shown in Table E-16. MRP-232, Revision 2 [16] updated the component to include nuts because these are included in the potential wear mechanism. MRP-232 was also able to rule out all aging mechanisms with the exception of wear and ISR/IC. Because of the limited age-related degradation mechanisms (ARDMs), expansion to the welded core shroud assembly was not considered necessary. The MRP-227 peer review [85] concluded that a VT-3 level examination was not required, so a nonqualified visual inspection was specified. The final MRP-227, Revision 2, inspection is shown in Table E-17 and Table 4-2.

Table E-17
Final MRP-227, Revision 2 entry for CE core shroud tie rods and nuts

Primary Item	Applicability	Effect (Mechanism)	Expansion Link	Examination Method/Frequency	Examination Coverage
Core Shroud Assembly (Welded) Core shroud tie rods and nuts	All plants with core shroud tie rods	Loss of material (wear) Aging management (ISR/IC)	None	Non-qualified visual inspection (see Section 4.2.3) no later than two refueling outages from the beginning of the first license renewal period. Subsequent inspections during every refueling outage.	Examination of the top end of 100% of the core shroud tie rods. Top-down and side views of each tie rod must be obtained.

Table E-18
Suggested entry for CE core stabilizing lug shim bolts from MRP 2018-022

Primary Item	Applicability	Effect (Mechanism)	Expansion Link	Examination Method/Frequency	Examination Coverage
Alignment and Interfacing Components Core stabilizing lug shim bolts	All plants	Cracking (SCC) Loss of material (wear)	None	Visual (VT-3) examination no later than 2 refueling outages from the beginning of the first license renewal period. Subsequent examinations at a 10-year interval.	All core stabilizing lug shim bolts

The recommended inspection for the core stabilizing lugs, shims, and lug shim bolts for the CE design from MRP 2018-022 [84] is shown in Table E-18. MRP-232 was able rule out wear as an ARDM. Based on the MRP-232 expert panel [86], these were included as Existing components crediting ASME Code Section XI inspections. A reference to TB-14-5 [56] was added for clarification of the applicability and as a supplement to the ASME Code Section XI inspection criteria. The final MRP-227, Revision 2, inspection is shown in Table E-19 and Table 4-8.

Table E-19
Final MRP-227, Revision 2 entry for CE core stabilizing lugs, shims, and lug shim bolts

Item	Applicability	Effect (Mechanism)	Reference	Examination Method	Examination Coverage
Alignment and Interfacing Components Core stabilizing lugs and shims Core stabilizing lug shim bolts	All plants (TB-14-5 [56])	Cracking (SCC) of bolting	ASME Code Section XI as supplemented by TB-14-5 [56] (Note 1)	Visual (VT-3) examination	Accessible surfaces at specified frequency

Note:
1. The core stabilizing lugs are attached to the RV and the shims are bolted to the lugs. The ASME Code examination of accessible surfaces is considered to include all details of the shim configuration, including the bolting and bolt lock pins. The bolting is fabricated from nickel-based materials and is susceptible to SCC. Although failure of the bolting does not itself cause loss of support function, asset impairment or issues with core barrel removal are a subsequent possibility. Westinghouse technical bulletin TB 14-5 provides additional information regarding possible visual indications that shim bolting failure may have occurred. This information should be reviewed to ensure a heightened awareness of the examiners is applied to this Code inspection.

NEI 03-08 Needed Revisions from MRP 2018-022—Combustion Engineering Expansion Components

The recommended inspection for the fuel alignment plate for the CE design from MRP 2018-022 [84] is shown in Table E-20. As indicated in the note to Table E-20, the examination method was updated to be consistent with the Westinghouse upper core plate. This includes a reduction to a VT-3 examination and a coverage minimum of 25% of core side surfaces. The final MRP-227, Revision 2 inspection is shown in Table E-21 and Table 4-5.

Table E-20
Suggested entry for CE fuel alignment plate from MRP 2018-022

Expansion Item	Applicability	Effect (Mechanism)	Primary Link	Examination Method/Frequency	Examination Coverage
Upper Internals Assembly Fuel alignment plate (Expansion applicable only after entering SLR period)	All plants with welded core shrouds assembled in two vertical sections	Cracking (IASCC, fatigue), loss of material (wear) Aging management (IE)	Core support barrel assembly: lower cylinder girth welds	Enhanced visual (EVT-1) examination. Subsequent examination at a 10-year interval (Note 1)	100% of accessible surfaces (Note 1)

Note:
1. The inspection requirement for the fuel alignment plate is analogous to the current requirement for the Westinghouse-design UCP in MRP-227-A. The inspection technique requirement for the UCP was reduced in MRP-227, Revision 1 and justified in responses to RAIs on MRP-227, Revision 1. Once the NRC safety evaluation is complete, the resulting reduced inspection requirements of the Westinghouse-design UCP can be substituted here for the fuel alignment plate.

Table E-21
Final MRP-227, Revision 2 entry for CE fuel alignment plate

Expansion Item	Applicability	Effect (Mechanism)	Primary Link	Examination Method/Frequency	Examination Coverage
Upper Internals Assembly Fuel alignment plate (Expansion applicable only after entering SLR period)	All plants with welded core shrouds assembled in two vertical sections	Cracking (SCC, IASCC, fatigue), Aging management (IE)	Middle girth weld (MGW)	Visual (VT-3) examination Reinspection every 10 years following initial inspection	Minimum of 25% of core side surfaces

NEI 03-08 Needed Revisions from MRP 2018-022—Combustion Engineering Examination Acceptance Criteria

The recommended examination acceptance criteria for the lower cylinder girth welds for the CE design from MRP 2018-022 [84] are shown in Table E-22. As indicated in the note [84], the terminology is updated in the final examination acceptance criteria shown in Table E-23 and Table 5-2. The examination acceptance criteria column as well as the expansion links were updated to be consistent with Table 4-2. The final MRP-227, Revision 2, examination acceptance criteria are shown in Table E-23 and Table 5-2.

Table E-22
Suggested entry for CE lower cylinder girth welds examination acceptance criteria from MRP 2018-022

Primary Item	Applicability	Examination Acceptance Criteria	Expansion Link(s)	Expansion Criteria	Expansion Item Examination Acceptance Criteria
Core Support Barrel Assembly Lower cylinder girth welds (Note 1)	All plants	Visual (EVT-1) examination. The specific relevant condition is a detectable cracklike surface indication.	a. Lower cylinder axial welds b. Fuel alignment plate (plant designs with core shrouds assembled in two vertical sections only)	a. The confirmed detection and sizing of a surface-breaking indication >2 in. (5.08 cm) in length in a lower cylinder girth weld shall require an EVT-1 examination of all accessible lower cylinder axial welds by the completion of the next refueling outage. b. (Applicable only after entering SLR period) The confirmed detection and sizing of a surface-breaking indication >2 in. (5.08 cm) in length in a lower cylinder girth weld shall require an EVT-1 of the fuel alignment plate within the next three refueling outages.	a. The specific relevant condition for the expansion lower cylinder axial welds is a detectable cracklike surface indication. b. The specific relevant condition is a detectable cracklike surface indication.

Note:

1. Under MRP-227, Revision 1, this component would be the core support barrel assembly middle girth weld (MGW) with expansions to the middle axial weld (MAW) and lower axial weld (LAW). Per the responses to NRC RAIs on MRP-227, Revision 1, the core support columns could also become an expansion to the MGW. Once MRP-227, Revision 1 has received a safety evaluation with acceptance of these changes, revisions to the naming of the Primary and Expansion components for the MRP-227-A "lower cylinder girth welds" provided in the approved version of MRP-227, Revision 1 should be substituted here.

Table E-23
Final MRP-227, Revision 2 entry for CE middle girth weld

Primary Item	Applicability	Examination Acceptance Criteria	Expansion Link(s)	Expansion Criteria	Expansion Item Examination Acceptance Criteria
Core Support Barrel Assembly Middle girth weld (MGW)	All plants	Visual (EVT-1), volumetric (UT), or eddy current (ET) examination. The specific relevant condition is a detectable cracklike surface indication.	Middle axial weld (MAW) Lower axial weld (LAW) Core support columns Fuel alignment plate (applicable only after entering SLR period)	*Core support barrel welds*: The confirmed detection and sizing of a surface-breaking indication with a length greater than 2 in. (5.08 cm) in the MGW shall require that the inspection be expanded to include the MAW and LAW by the completion of the next refueling outage. *Core support columns*: Plants with core shrouds assembled in two vertical sections: The confirmed detection of a surface-breaking linear indication in the MGW shall require examination of 25% (of the total of both visible and non-visible as seen from above the core support plate) of the core support column assemblies by the completion of the next refueling outage. The confirmed detection of a relevant disruption of discontinuity in the surface of a core support column weld shall require examination of 100% of the accessible uninspected core support column welds from the top side of the core support plate (minimum of 75% of the total population of core support column welds) during the same outage. *Fuel alignment plate*: The confirmed detection and sizing of a surface-breaking indication with a length greater than 2 in. (5.08 cm) in the MGW shall require that the inspection be expanded to include the fuel alignment plate by the completion of the next refueling outage (if plant has entered the SLR period).	*Core barrel welds*: The specific relevant condition for the expansion lower cylinder axial welds is a detectable crack-like surface indication. *Core support columns*: The specific relevant condition for the core support column welds is a disruption or discontinuity in the surface of the weld. The specific relevant condition for the core support columns viewed from above the core support plate is missing or separated welds, or fractured, misaligned, or missing columns. *Fuel alignment plate*: The specific relevant condition for the fuel alignment plate inspection is deformed ligaments, broken ligaments, and cracking visible to a general visual (VT-3) inspection.

NEI 03-08 Good Practice Recommendations in MRP 2018-022

MRP 2018-022 [84] contained additional recommendations regarding asset management-related inspections for high economic consequence components. These were considered NEI 03-08 Good Practice items. Asset management recommendations from MRP 2018-022 [84] were not directly included herein, however, an asset management Good Practice item was separately included in MRP 2021-007 [89]. A comprehensive list of components to consider for asset management is included in Section 5 of MRP-232, Revision 2 [16] and MRP 2021-007 [89]. A utility could implement any of the recommendations at its discretion.

Appendix F: Summary of Changes to Document

Part 1—Summary Description of Document Changes from MRP-227 Revision 1-A to MRP-227 Revision 2

Page[1]	Section[1]	Description of Change
v	N/A	Acknowledgments page has been updated.
vii	N/A	Revision 2 statement added at the end of the first paragraph of the Report Summary and the Revision 1 statement was removed. The first paragraph of the Background was updated to include "for the first and subsequent periods of extended operation." The second paragraph was editorially changed to include "in the United States where construction began."
viii	N/A	A fourth objective bullet was added. In the Approach description, "nuclear steam supply system" was removed, as that acronym is already defined earlier and the acronym "FMECA" is defined at its first use. The second sentence of the Approach description was changed to include SLR. The last two sentences of the Approach description were added to describe Revision 2 updates.
ix	N/A	In the Applications, Value, and Use paragraph, "May 2007" was changed to "November 2017" and a reference to Appendix C was added.
xi and xii	N/A	The Executive Summary was updated for Revision 2 and SLR. Additional key findings were added.
xiii, xiv, and xv	N/A	Added several acronyms and removed other acronyms no longer used.
xvii	N/A	Record of revisions has been updated.
1-1	1	The first paragraph was edited to include "for first license renewal and subsequent license renewal (SLR)." and "constructed and initially operating" was editorially changed to "where construction began." A comma was removed from the last paragraph.
1-2	1	A comma was added to the last bullet point. The table references in the last paragraph were editorially changed.

Page[1]	Section[1]	Description of Change
-3	1	Table references were editorially changed. The acronym ISI was added. The acronym PWROG was defined. A paragraph for Revision 2 updates was added.
2-1	2.1	The first paragraph was updated. The OE acronym was deleted from the Engineering Program definition. Reference to NUREG-2191 for SLR was added to the Aging Management Program definition.
2-1 and 2-2	2.1	The bullet points for the purpose of Revision 2 were updated and additional bullet points were added.
2-2	2.1	MRP-211 was added as a reference for the database of material data and supporting results. The second set of bullet points on the page were editorially capitalized.
2-2 and 2-3	2.1	Two paragraphs were added to describe the aging management updates in Revision 2 including the inclusion of SLR, Appendix C, Appendix, D, and Appendix E.
2-4	2.3	In the second paragraph, the comma between "assemblies or" was removed. Reference to Appendix D was added. A paragraph was added describing that the MRP-227 guidelines do not take a position regarding ASME Code classification of components.
2-5	2.3	The second paragraph was editorially changed and a statement describing the interim guidance included in MRP-227, Revision 2 was added.
2-6	2.3	The title for Figure 2-2 was changed from "Links between Categorization, Engineering Evaluations and Assessments, Aging Management Strategy Development and the I&E Guidelines" to "Links between Categorization, Analysis, Aging Management Strategy Development and the I&E Guidelines."
2-7	2.4	Editorial changes in the first paragraph were made, "the guidelines" to "these guidelines", "vessel" was added, and "and SLR" was added. The first bullet was updated to "the remaining years of operation." The second bullet was updated to include "or the power plant has implemented flexible power operation within the screening limits on power change range and number of flexible power operations provided in Appendix D for Westinghouse/CE designed plants." In the last bullet, revisions were specified for MRP-189 and MRP-191.
2-8	2.4	In the first paragraph, "May 2007" was changed to "November 2017." In the second paragraph, "MRP" was added to "-191". In the third paragraph, "2007" was changed to "2017," "the" was added before "issuance," and "Revision 1" was updated to "Revision 2." In the fourth paragraph, "which" was editorially changed to "that" in two places, the Existing programs referred to were clarified as plant-specific programs outside of Table 4-8 and 4-9, and the paragraph was updated to read in the present tense.
2-8 and 2-9	2.4	In the last paragraph a discussion of plant-specific assessments of CASS materials was added for clarification.

Page(1)	Section(1)	Description of Change
3-1	3.1.1	In the first paragraph, "six" was changed to "five." A reference to MRP-189 was added.
3-3	3.1.1	Figure 3-1 was updated to a new figure.
3-4	3.1.1	The comma between "refueling and" was removed.
3-5	3.1.2	In the first paragraph, "14" was changed to "11" and the last sentence was added to clarify the removal of the CE bolted core shroud design. The reference to MRP-191 was editorially changed. In the last paragraph the acronym "ICI" was used instead of "in-core instrumentation."
3-6	3.1.2	In the Core Support Barrel description, the sentence "In one CE plant, thermal shield is part of the core support barrel assembly." was removed because this plant is no longer operating.
3-7	3.1.2	The sentence "The core shroud assembly is attached to the core support barrel by threaded structural fasteners for those internals with a bolted core shroud and top-mounted ICI." was removed.
3-8	3.1.2	The acronym "ICI" was used throughout the in-core instrumentation support system description.
3-9	3.1.3	In the first paragraph, "the" was added before "upper support," "two-loop, three-loop, and four-loop" was changed to "2-loop, 3-loop, and 4-loop," and the reference to MRP-191 was editorially changed. Figure 3-5 was updated to provide a clearer image.
3-10	3.1.3	In the second paragraph of the Upper Internals Assembly section, "s" was removed from "hold-down springs."
3-12	3.1.3	In the fourth paragraph, "four-loop" was changed to "4-loop." In the fifth paragraph "baffle/former" was changed to "baffle-former." In the sixth paragraph, "baffle/former" and "barrel/former" were changed to "baffle-former" and "barrel-former."
3-13 and 3-14	3.2	The word "Reference" was removed in the first and third paragraphs.
3-14	3.2.4	A comma was added after "structural" in the last paragraph.
3-15	3.2.7	The acronym ICI was used.
3-16	3.3.1	In the first paragraph references to MRP-189, MRP-190, and MRP-191 were added.
3-16	3.3.1	Editorial changes were made to the first paragraph, "involved" was changed to "involving" and "some of the components other than Category A components with" was changed to "the Category B and C components was performed." References to MRP-231 and MRP-232 were added.

Page[1]	Section[1]	Description of Change
3-17	3.3.1	The word "components" was added to each component category definition. The word "the" was added before "FMECA" in the last component category bullet point. References to NUREG-1800 and NUREG-2192 for SLR were added.
3-18	3.3.1	The sentence "Note that disassembly of the internals components from their respective major internals assembly is not required for this sampling and lead component approach in order to minimize the risk of damage to the internals and of personnel radiation exposure." was added in the first paragraph.
3-18	3.3.2	In the first paragraph, clarification was added to note that the Section 3 tables have been updated for OE and SLR and references to MRP-189, MRP-190, and MRP-191 were added. The last paragraph, was updated to simply note that component nomenclature in the Section 3 tables may differ from Section 4 and Section 5.
3-19 through 3-25	Table 3-1	Table 3-1 (including notes) was updated according to MRP-231 Revision 4.
3-26 through 3-28	Table 3-2	Table 3-2 was updated according to MRP-232 Revision 2 and table notes were updated. Some components were kept within the table due to specific aging-related degradation mechanisms and previous safety evaluation commitments.
3-29 through 3-33	Table 3-3	Table 3-3 was updated according to MRP-232 Revision 2 and table notes were updated. Some components were kept within the table owing to specific aging-related degradation mechanisms and previous safety evaluation commitments.
4-1	4	In the first paragraph, the word "ultimate" was deleted and "or SLR" was added.
4-2	4	In the first paragraph references were updated. In the fourth paragraph a clarification was added for the term "10-year ISI interval."
4-2	4	A reference to Appendix C was added to the last paragraph.
4-4	4.1.3	Two sentences "Volumetric examination of bolting, which has well established procedural qualifications [21], requires technical justification and a performance demonstration [3]. The other qualified methodologies specified herein require technical justification and must meet the requirements of Section 5 within MRP-228 [3]." were added. A comma between "justification or" was removed.
4-4	4.2	A reference was added for 10 CFR 50.55a.

Page[1]	Section[1]	Description of Change
4-5	4.2.1	In the third paragraph, "0.106"" was corrected to "0.105"." In the fourth paragraph, the sentence "The visual VT-3 examination has been shown to be capable of detecting intergranular stress corrosion cracking (IGSCC) cracking in boiling water reactor (BWR) shrouds and other internals components." was deleted and the last sentence was changed to "In certain instances, VT-3 has demonstrated the capability to detect cracking in the boiling water reactor (BWR) fleet (for example, as discussed in utility correspondence documented in ML14139A178 [42]).". In the last paragraph, "numerous" was deleted and "the" was added.
4-6	4.2.2	In the first paragraph, a "-" was added between "surface breaking". In the second paragraph, "Section 2.3.6.4 of" was deleted. Editorial changes adding "using the" and "specified in [2] for resolution demonstration" were made in the last paragraph.
4-6 and 4-7	4.2.2	A description of EVT-1 capability was added.
4-7	4.2.3	This subsection was added for nonqualified visual inspection. This subsection addition changed the subsection numbers for the remaining Section 4.2 subsections.
4-7	4.2.4	Examples of using surface examination were added. The first sentence in the second paragraph was changed to "When selected for use as inspection technique or as a supplemental examination," The last sentence of the last paragraph added the word "tubing" and added an "s" to "flux thimble."
4-8	4.2.5	The sentences "UT was also permitted as an alternative examination for inspecting core barrel welds for potential cracking degradation." and "An example of a component for which visual or surface examination may not detect degradation is bolting" were added to the first paragraph. "baffle/former" was changed to "baffle-former" in the first paragraph and last paragraph. In the second and last paragraph, "(UT)" was removed. The third paragraph was changed to "UT is also permissible as an alternative or supplement to the specified visual examinations (visual VT-3 or VT-1/EVT-1) specified in these guidelines. This is consistent with [2]."
4-8	4.2.6	The comma between "examination and" was removed.
4-9	4.2.8	A reference was added for the ASME Section XI Code and a reference was added for 10 CFR 50.55a.
4-9	4.3	In the second paragraph, references to NUREG-2191 and NUREG-2192 were added for SLR.

Page[1]	Section[1]	Description of Change
4-10 and 4-11	4.3	In the first paragraph, "sample" was changed to "sampling" and a description of SLR irradiation effects was added, "items is" was editorially changed to "items are" and references were added throughout. In the second paragraph, editorial changes were made in referencing the section 4 tables. The following was added to the end of the second paragraph, "Utility owners should submit any Deviations related to these Section 4 and Section 5 inspections to the relevant materials issue program (IP) responsible for the overarching guidance (for example, EPRI-MRP or PWROG). Multiple Deviations are not required. Utility owners that file Relief Requests to ASME B&PVC Section XI inspection requirements ('Existing' programs components) should also inform the EPRI-MRP of this relief request filing. The impact to the utility's MRP-227 aging management program shall also be evaluated."
4-11	4.3	A paragraph was added to explain secondary expansion components. In the second paragraph a comma was added between "However if." In the third paragraph, the references to the section 4 tables were editorially changed and a reference to ASME Section XI was added. In the last paragraph, the comma between "Program to" was removed and the references to the section 4 tables were editorially changed.
4-12 through 4-21	Table 4-1	Table 4-1 (including notes) was updated according to MRP-231 Revision 4.
4-22 through 4-26	Table 4-2	Note 1 was added to allow alternate aging management strategies. Note 11 was added to the applicability column to clarify that the table is applicable for 40 to 80 years of operation. All figure numbers in the table were updated. The components C1. Core shroud assembly (bolted) core shrouds bolts and C4. Core shroud assembly (bolted) assembly were removed due to the planned shutdown of the CE-designed plants containing these components. C3.2 Ribs and Rings was removed from the expansion column for C3. Core shroud assembly (welded) shroud plates. C5.5. CSB flexure weld (CSBFW) was added as an expansion component for SCC for C5. Core support barrel assembly upper flange weld (UFW). C6.4. Fuel alignment plate was added as an expansion component for C6. Core support barrel assembly middle girth weld (MGW) for SLR. SCC was removed from C7. Core support barrel assembly CSB flexure weld (CSBFW). Volumetric (UT) and surface (ET) examination were added to the examination method for C5. Core support barrel assembly upper flange weld (UFW), C6. Core support barrel assembly middle girth weld (MGW), and C7. Core support barrel assembly CSB flexure weld (CSBFW). "and supports" has been added to C11. Control element assembly

Page[1]	Section[1]	Description of Change
4-22 through 4-26 (continued)	Table 4-2	instrument guide tubes and supports. SCC and IASCC have been added as mechanisms for C12. Lower support structure deep beams. The components C18. Core shroud assembly (welded) core shroud tie rods and nuts and C19. CEA shroud assemblies CEA shroud bolts were added as primary components. Notes 1, 4, 6, 10, and 11 have been added. The previous Note 2 was removed. For detailed changes, see Part 2 of this appendix.
4-27 through 4-30	Table 4-3	Note 1 was added to allow alternate aging management strategies. Note 12 was added to the applicability column to clarify that the table is applicable for 40 to 80 years of operation. All figure numbers in the table were updated. W1. Control rod guide tube assembly guide plates (cards) was moved to the Existing Programs table. IASCC was added as a mechanism for W2. Control rod guide tube assembly lower flange welds. Volumetric (UT) and surface (ET) examination were added to the examination method for W3. Core barrel assembly upper flange weld (UFW) and W4. Core barrel assembly lower girth weld (LGW). An accessibility statement was added for W4. Core barrel assembly lower girth weld (LGW). Secondary expansion notes were added for W3. Core barrel assembly upper flange weld (UFW) and (W6a, W6b, and W6c) Baffle-former assembly baffle-former bolts. The examination frequency was updated to “no later than 40 EFPY” for W5. Baffle-former assembly baffle-edge bolts. W6. Baffle-former assembly baffle-former bolts was separated into three rows (W6a, W6b, and W6c) to provide the applicable examination frequency per each plant design tier. The baffle-edge bolts were removed from W7. Baffle-former assembly since they have their own component row (W5). Bracket bolts were added and the examination frequency was updated to “no later than 40 EFPY.” “Type” was added before “304” in the applicability column for W8. Alignment and interfacing comment internals hold down spring. The examination frequency was updated for SLR. SCC was added as a mechanism and wear was removed for W9. Thermal shield assembly thermal shield flexures and the examination coverage was further defined. Notes 1, 4, 5, 6, 10, 11, and 12 have been added. Note 9 was modified. The previous Notes 3, 5, 8, and 10 were removed. For detailed changes, see Part 2 of this appendix.

Page[1]	Section[1]	Description of Change
4-31 through 4-36	Table 4-4	Table 4-4 (including notes) was updated according to MRP-231 Revision 4.
4-37 through 4-39	Table 4-5	Note 1 was added to allow alternate aging management strategies. Note 9 was added to the applicability column to clarify that the table is applicable for 40 to 80 years of operation. All figure numbers in the table were updated The components C1.1. Core shroud assembly (bolted) core support column bolts and C1.2. Core shroud assembly (bolted) barrel-shroud bolts were removed due to the planned shutdown of the CE-designed plants containing these components. C3.2. Core shroud assembly (welded) ribs and rings were removed since they are inaccessible. Fatigue was removed as a mechanism for C5.1. Core support barrel assembly lower girth weld (LGW). Volumetric (UT) and surface (ET) examination were added to the examination method for C5.1. Core support barrel assembly lower girth weld (LGW), C5.2. Core support barrel assembly upper girth weld (UGW), C5.3. Core support barrel assembly upper axial weld (UAW), C5.5. Core support barrel assembly CSB Flexure Weld (CSBFW), C6.1. Core support barrel assembly middle axial weld (MAW), and C6.2. Core support barrel assembly lower axial weld (LAW). C5.5. CSB flexure weld (CSBFW) was added as an expansion component from C5. Core support barrel assembly upper flange weld (UFW) for SCC. C6.4. Upper internals assembly fuel alignment plate was added as an expansion component from C6. Core support barrel assembly middle girth weld (MGW) for SLR. "and supports" has been added to C11.1. Control element assembly remaining instrument guide tubes and supports. For C6.3. Lower support structure core support columns the applicability column was updated to "Plant designs with core shrouds assembled in two vertical sections" and the Examination Coverage column was changed to remove guidance for plants with full-height bolted core shroud plates. Notes 1, 3, 4, 8, and 9 have been added. The previous Note 2 was removed. The previous Note 5 was edited. For detailed changes, see Part 2 of this appendix.

Page[1]	Section[1]	Description of Change
4-40 through 4-43	Table 4-6	Note 1 was added to allow alternate aging management strategies. Note 10 was added to the applicability column to clarify that the table is applicable for 40 to 80 years of operation. All figure numbers in the table were updated IASCC was added as a mechanism for W2.1. Control rod guide tube assembly remaining CRGT lower flange welds and the examination coverage was updated to include the locations with control rods. The BMI cruciforms were added to W2.2. Bottom mounted instrumentation system bottom-mounted instrumentation (BMI) column bodies for clarification and TE was added as a mechanism. Volumetric (UT) and surface (ET) examination were added to the examination method for W3.1. Core barrel assembly upper girth weld (UGW), W3.2. Core barrel assembly upper axial weld (UAW), W3.3. Core barrel assembly lower flange weld (LFW), W4.2. Core barrel assembly middle axial weld (MAW), and W4.3. Core barrel assembly lower axial weld (LAW). Text was added to clarify the W3.2. Core barrel assembly upper axial weld (UAW) component as a secondary expansion component from W3.1 or W3.3. Text was added to clarify the W3.4. Lower internals assembly lower support forging or castings labeling the component as a secondary expansion component from W3.3. Fatigue and wear were removed and IASCC was added as a mechanism for W4.1. Upper internals assembly upper core plate. An accessibility statement was added for W4.2. Core barrel assembly middle axial weld (MAW) and W4.3. Core barrel assembly lower axial weld (LAW). W6.1. Core barrel assembly barrel-former bolts was separated into two rows based on primary component findings (baffle-former bolt inspection results). Text was added to clarify the component as a secondary expansion component from W6.2 (depending on baffle-former bolt inspection results), an accessibility statement was added to each row, and void swelling was removed as a mechanism. Notes 1, 3, 8, 9, and 10 have been added. The previous Note 5 was edited. The previous Note 6 was removed. For detailed changes, see Part 2 of this appendix.

Page[1]	Section[1]	Description of Change
4-44	4.4	A reference to ASME code Section XI was added, "and first license renewal operating period" was added, the table references were editorially changed, and "Section 4.2.7" was changed to "Section 4.2.8" in the first paragraph. "the" was added before "interval" in the second paragraph. Editorial changes were made to the second paragraph including "Titled" being changed to "titled" and "the" being added before "interval". Editorial changes were made to the third paragraph including an "s" added to "core support structure", "undertaking" replacing "evolution", a comma added between "plants it", a "-" added between "pressure retaining", and "the" added before "reactor". In the last paragraph a comma was added between "B-N-3 but".
4-45	4.4	The sentences discussing Table 4-8 were moved to Section 4.4.2. The sentences discussing Table 4-9 were moved to Section 4.4.3. The paragraph describing Westinghouse upper support plate assembly designs was moved to Section 4.4.3. The Westinghouse flux thimble tubes paragraph was moved to Section 4.4.3. The following was added to the last paragraph of the section, "Utility owners should submit any Deviations related to these inspections to the relevant materials Issue Program responsible for the overarching guidance (for example, EPRI-MRP or PWROG). Multiple Deviations are not required. Utility owners that file Relief Requests to ASME B&PV Code Section XI inspection requirements ('Existing' programs components) should also inform the EPRI-MRP of this relief request filing. The impact to the utility's MRP-227 aging management program shall also be evaluated."
4-45 and 4-46	4.4.2	"CE" was used in place of "Combustion Engineering" in the first paragraph. A paragraph was added for the ICI thimble tubes.
4-46	4.4.3	A paragraph was added for the guide plates.
4-47	4.4.3	Additional information regarding the flux thimble tubes was added and a paragraph on thermal sleeves was added.
4-49 through 4-50	Table 4-8	Figures have been added for each existing programs component. Core stabilizing lug shim bolts were added to C17. Alignment and interfacing components core stabilizing lugs and shims and a reference number to TB-14-5 was added. Reference to OG-21-160 was also added. C20. Top-mounted ICI thimble tubes—lower was added as an existing programs component. Note 1 was edited.
4-51 through 4-53	Table 4-9	Figures have been added for each existing programs component. W1. Control rod guide tube assembly guide plates (cards), c-tubes, and sheaths was moved to the Existing Programs table. "as supplemented by TB-16-4" was deleted from W12a, W12b, and W15. W12a and W12b were combined to one line item, W12. Lower internals assembly lower core plate XL lower core plate. W13. Bottom mounted instrumentation system flux thimble tubes were removed as described in Section 4.4.3.

Page[1]	Section[1]	Description of Change
4-51 through 4-53 (continued)	Table 4-9	A reference number was added to W14. Alignment and interfacing components clevis bearing stellite wear surface clevis insert bolts for TB-14-5 W16. Upper internals assembly upper fuel alignment pins, W17. Lower internals assembly lower fuel alignment pins, W18. Lower internals assembly XL lower fuel alignment pins, W19. Alignment and interfacing components upper core plate inserts, W20. Radial support keys radial support keys, and W21a. and W21b. Alignment and interfacing components thermal sleeves were added as existing programs components. Note 1 has been added. Note 3 was edited and was previously Note 2. Added reference to OG-21-160.
4-54 through 4-94	N/A	Previous figures were updated or removed as necessary and new figures were added. CE component figures were moved so that the order of figures is now B&W components, CE components, and then Westinghouse components to align with the organization of the Section 4 and 5 tables.
5-1	5	The word "both" was removed and table references were editorially changed throughout this section.
5-2	5	A reference to Appendix C was added.
5-3 through 5-15	Table 5-1	Table 5-1 was updated to be consistent with the updates to Tables 4-1 and 4-4.
5-16 through 5-20	Table 5-2	The Expansion Link(s) column components C1. Core shroud assembly (bolted) core shrouds bolts and C4. Core shroud assembly (bolted) assembly, C1.1. Core shroud assembly (bolted) core support column bolts, C1.2. Core shroud assembly (bolted) barrel-shroud bolts, and C3.2. Core shroud assembly (welded) ribs and rings were removed. Headings were added for individual components in the Expansion Criteria and Expansion Item Examination Acceptance Criteria column for several items in this table. Volumetric (UT) and surface (ET) examination were added to the examination method for C5. Core support barrel assembly upper flange weld (UFW), C6. Core support barrel assembly middle girth weld (MGW), and C7. Core support barrel assembly CSB flexure weld (CSBFW). C5.5. CSB flexure weld (CSBFW) was added as an expansion component from C5. Core support barrel assembly upper flange weld (UFW) for SCC. The Expansion Criteria column text for C6.3 Core support columns for plants with full-height bolted core shroud plates was removed C6.4. Upper internals assembly fuel alignment plate was added as an expansion component from C6. Core support barrel assembly middle girth weld (MGW) for SLR. "and supports" has been added to C11 and C11.1. The components C18. Core shroud assembly (welded) core shroud tie rods and nuts and C19. CEA shroud assemblies CEA shroud bolts were added.

Page[1]	Section[1]	Description of Change
5-21 through 5-25	Table 5-3	W1. Control rod guide tube assembly guide plates (cards) was removed since this component was moved to the Existing Programs table. Headings were added for individual components in the Expansion Criteria and Expansion Item Examination Acceptance Criteria column for several items in this table. "at locations with control rods" was added to the expansion criteria for W2.1 Remaining CRGT lower flange welds. Volumetric (UT) and surface (ET) examination were added to the examination method for W3. Core barrel assembly upper flange weld (UFW) and W4. Core barrel assembly lower girth weld (LGW). Secondary expansion components were labeled as such in the Expansion Link(s) column and Expansion Criteria column. The Expansion Criteria and Expansion Item Examination Acceptance Criteria for W6. Baffle-former assembly baffle-former bolts was updated for the barrel-former bolts visual VT-3 examination if large clusters of baffle-former bolts are discovered. The baffle-edge bolts were removed from W7. Baffle-former assembly since they have their own component row (W5). Bracket bolts were added and the examination acceptance criteria was changed from "along high fluence" to "near high fluence" The examination acceptance criteria for W9. Thermal shield assembly thermal shield flexures was changed to "The specific relevant conditions for thermal shield flexures are cracking which indicates or could result in complete separation." Notes 3 and 4 were added.
5-26	5.1.1	Table references were editorially changed throughout this section.
5-27	5.1.3	A comma was added after "discontinuities", a "-" was added between "surface-breaking", "an" was added in front of "appropriate", "Reference" was deleted, and a comma was added after "crack-like" in the first paragraph. A "-" was added between "surface breaking" in the second paragraph.
5-27	5.1.4	This subsection was added for non-qualified visual inspection. Note that this subsection addition changed the subsection numbers for the remaining section 5.1 subsections.
5-28	5.1.5	The references to the section 5 tables were editorially changed.
5-28	5.1.6	"accepted" was changed to "dispositioned" in the first paragraph. A reference to MRP-228 for technical justifications was added to the last paragraph. A paragraph describing the use of UT examination for alternative or supplemental examinations was added.
5-29	5.2	The Section number "4.2.5" was updated to "4.2.6"
5-29	5.3	The references to the section 5 tables were editorially changed. A sentence referencing the expert panel process was added.

Page[1]	Section[1]	Description of Change
6-1	6	The comma between "examination to" was removed. Additional references were added to the second to the last sentence in the third paragraph. Also, the acronym CGR was defined in the third paragraph.
6-2	6	Code case N-889 was referenced and the last sentence was edited in the first paragraph. The second paragraph was edited and updated to reference Appendix C. The third paragraph was separated into its own paragraph (was previously included with the "Other options…" paragraph) and a new opening sentence was added to the paragraph.
7-1	7	The second sentence in the first paragraph was changed to, "As stated previously, these guidelines do not reduce, alter, or otherwise affect current ASME B&PV Code Section XI, guidance issued under NEI 03-08 by another Issue Program or plant-specific licensing in-service inspection requirements." References to MRP-189 and MRP-191 were added to the second paragraph.
7-1 and 7-2	7.1	A sentence describing the interim guidance included in MRP-227, Revision 2 was added to the last paragraph. In addition, a paragraph was added that refers the reader to asset management considerations in MRP 2021-007.
7-2	7.2	A comma was added between "document and".
7-2 and 7-3	7.3	The reactor internals guidelines implementation requirement was updated for Revision 2, allowing alternate aging management strategies and updating the timeline for implementing MRP-227 Revision 2. The sentence, "As stated previously, these guidelines do not reduce, alter, or otherwise affect current ASME B&PV Code Section XI, guidance issued under NEI 03-08 by another Issue Program or plant-specific licensing inservice inspection requirements. It is acknowledged that certain PWR internals component items are managed independently from MRP-227 but are referenced herein for awareness and information." was also added into the Section.
7-3	7.6	"with NEI 03-08 inspection requirements and" was added into the Needed Section 7.6 requirement.
8-1 through 8-8	8	References were updated throughout, new references were added, and references no longer used were removed.
A-1	Appendix A	A reference to NUREG-2191 was added in the first paragraph.
A-2	Appendix A	"most recent" was edited to "initial" in the first paragraph and a reference to MRP-227-A was added. A sentence for subsequent examination of the UCB bolts was added. PWSCC was defined in the fourth paragraph.
A-2 and A-3	Appendix A	A reference for IN 82-29 was added and "HTH Condition" was changed to "HTH condition" in the PWSCC definition.
A-3	Appendix A	"for maintenance" was removed in the last paragraph.
A-4	Appendix A	A reference for TB-14-5 was added in the first paragraph. A paragraph describing clevis insert bolt degradation was added. The third paragraph was updated to "2010-2016", "four B&W units", and "three of the units".

Page[1]	Section[1]	Description of Change
A-5	Appendix A	A reference for baffle-former bolt OE was added to the third paragraph. "Three" was changed to "Four," "the initial MRP-227 examination of the" was added in place of "inspection," "2014" was changed to "2016," "2,586" was changed to "3,450", and a sentence about subsequent examinations was added in the fourth paragraph. A sentence mentioning visual and volumetric inspections of baffle-former bolts was added to the fifth paragraph. "s" was removed from "baffle-edge bolts" and "bolt" was added after "baffle-former" in the last sentence of the fifth paragraph.
A-6	Appendix A	A reference for the OE was added at the end of the first paragraph. A reference was added for the baffle-former bolt 2016 OE and OE from 2019 was added with references. In the third paragraph, "later" was editorially changed to "subsequent."
A-7	Appendix A	A paragraph was added for baffle-former bolt OE for a converted upflow plant and standard designed upflow plant. OE was added for axial weld inspections and the NEI 03-08 "Good Practice" recommendations were referenced at the end of the second full paragraph. "has" was removed from the second to the last sentence on the page.
A-8	Appendix A	Thermal shield support block bolt OE was added.
A-9	Appendix A	NSAL-17-1, MRP 2018-007, and WCAP-17451-P were added as references and "Rev. 1 of" was removed from before "MRP-227" in the second paragraph.
A-10	Appendix A	Guide card OE was updated. A reference to TB-14-5 was added in the third paragraph. A reference was added for NRC Bulletin 88-09 in the last paragraph.
A-11	Appendix A	A note was added about CE plant decommission in the first paragraph. "Three" was changed to "Several" in the second paragraph and "2014" was changed to "2019".
A-11 and A-12	Appendix A	Thermal sleeve OE was added.
A-12	Appendix A	In the Change in Dimension section, a reference was added for MRP-175 and further OE on the ICI thimble tubes was added for SLR. In the Miscellaneous section, "type 347" was capitalized to "Type 347, and "baffle-former" was corrected to "barrel-former" in the second paragraph. A paragraph on barrel-former bolt visual inspection OE was added.
A-13	Appendix A	In the Miscellaneous section, a paragraph on thermal shield flexure OE was added. In the Mechanism Unidentified to Date section, the paragraph on the IMI guide tubes was updated. In the Reactor Internals Component Replacements section, "and CE" was deleted in the first sentence. "also" was deleted from the second sentence.
B-2	Appendix B	A new first paragraph was added to the Appendix to note that SLR operation can result in higher component fluence but the 227 guidelines account for this and the previous applicability criteria in Appendix B is still to be applied. Various editorial adjustments in this vein were made on pages B-4, B-5, B-6.

Page[1]	Section[1]	Description of Change
C-1 through C-6	Appendix C	This is a new Appendix added to Revision 2.
D-1 through D-8	Appendix D	This is a new Appendix added to Revision 2.
E-1 through E-17	Appendix E	This is a new Appendix added to Revision 2.

Notes:

Page numbers and section numbers correspond to this Revision, MRP-227 Revision 2.

Part 2—MRP-227 Revision 2 Primary and Expansion Table Changes—Comparison from MRP-227 Revision 1-A

The following tables show Primary and Expansion item changes between MRP-227, Revision 1-A and MRP-227, Revision 2. Westinghouse and CE design table entry changes are shown by underlined text. Note that Westinghouse and CE design text deletions are hidden from the MRP-227, Revision 2 line entries; however, underline still exists in each cell corresponding to deleted text to show a change and draw the reader to compare the MRP-227, Revision 2 line entry to the MRP-227, Revision 1-A line entry.

Table 4-1: B&W plants Primary items

Item	Applicability	Effect (Mechanism)	Expansion Link	Exam. Meth/Freq.	Exam. Coverage
Existing MRP-227-A entries **Plenum Cover Assembly and Core Support Shield Assembly** Plenum cover weldment rib pads Plenum cover support flange CSS top flange	All plants	Loss of material and associated loss of core clamping preload (wear)	None	One-time physical measurement no later than two refueling outages from the beginning of the license renewal period. Perform subsequent visual (VT-3) examination at a 10-year ISI interval.	Determination of differential height of top of plenum rib pads to reactor vessel seating surface, with plenum in reactor vessel. See Figure 4-1.
MRP-227 Revision 1 entries **B1. Plenum Cover Assembly and Core Support Shield Assembly** a. Plenum cover weldment rib pads b. Plenum cover support flange c. Plenum cover support ring d. CSS top flange	NO CHANGE	NO CHANGE	NO CHANGE	One-time physical measurement no later than two refueling outages following entry into the period of extended operation. Subsequent visual (VT-3) examination prior to the end of each 10-year ISI interval.	Determination of differential height of top of plenum rib pads/plenum cover support ring location to reactor vessel seating surface, with plenum in reactor vessel. See Figure 4-1.

Table 4-1: B&W plants Primary items (continued)

Item	Applicability	Effect (Mechanism)	Expansion Link	Exam. Meth/Freq.	Exam. Coverage
MRP-227 Revision 1-A entries **B1. Plenum Cover Assembly and Core Support Shield Assembly** a. Plenum cover weldment rib pads b. Plenum cover support flange c. Plenum cover support ring d. CSS top flange	Entry remained unchanged within MRP-227 Revision 1-A.				
MRP-227 Revision 2 entries **B1.Plenum Cover Assembly and Core Support Shield Assembly** a. Plenum cover weldment rib pads b. Plenum cover support flange c. Plenum cover support ring d. CSS top flange	All plants 40 < years ≤ 80	NO CHANGE	NO CHANGE	The initial one-time physical measurement required by previous revisions of this guideline is complete for all B&W plants; no relevant indications have been observed. Subsequent visual (VT-3) examination during each 10-year ISI interval.	Accessible top surfaces of the plenum cover support ring/plenum cover weldment rib pads and CSS top flange when the RV closure head and plenum assembly are removed. See Figure 4-1.
Existing MRP-227-A entries **Control Rod Guide Tube Assembly** CRGT spacer castings	All plants	Cracking (TE), including the detection of fractured spacers or missing screws	None	Visual (VT-3) examination during the next 10-year ISI. Subsequent examinations at a 10-year ISI interval.	Accessible surfaces at each of the 4 screw locations (at every 90°) of 100% of the CRGT spacer castings (limited accessibility). See Figure 4-5.

Table 4-1: B&W plants Primary items (continued)

Item	Applicability	Effect (Mechanism)	Expansion Link	Exam. Meth/Freq.	Exam. Coverage
MRP-227 Revision 1 entries **B2. Control Rod Guide Tube Assembly** CRGT spacer castings	NO CHANGE	Cracking (TE), including the detection of fractured spacers or missing screws (Note 3)	Vent valve bodies	Visual (VT-3) examination during the next 10-year ISI interval. Subsequent examination prior to the end of each 10-year ISI interval.	Accessible surfaces at each of the four screw locations (at every 90°) of 100% of the CRGT spacer castings (limited accessibility) See Figure 4-5.
MRP-227 Revision 1-A entries **B2. Control Rod Guide Tube Assembly** CRGT spacer castings	NO CHANGE	NO CHANGE	NO CHANGE	Visual (VT-3) examination during the next 10-year ISI interval. Subsequent examination prior to the end of each 10-year ISI interval. (Note 10)	Accessible surfaces at each of the four screw locations (at every 90°) of 100% of the CRGT spacer castings (limited accessibility) (Note 12) See Figure 4-5.
MRP-227 Revision 2 entries **B2. Control Rod Guide Tube Assembly** CRGT spacer castings	All plants 40 < years ≤ 80	Cracking (TE), including the detection of fractured spacers or missing screws (Note 5)	None	Visual (VT-3) examination during the next 10-year ISI interval. Subsequent examination during each 10-year ISI interval.	Accessible surfaces at each of the four screw locations (at every 90°) of 100% of the CRGT spacer castings (limited accessibility) (Note 6) See Figure 4-5.

Table 4-1: B&W plants Primary items (continued)

Item	Applicability	Effect (Mechanism)	Expansion Link	Exam. Meth/Freq.	Exam. Coverage
Existing MRP-227-A entries **Core Support Shield Assembly** CSS vent valve top retaining ring CSS vent valve bottom retaining ring (Note 1)	All plants	Cracking (TE), including the detection of surface irregularities, such as damaged, fractured material, or missing items	None	Visual (VT-3) examination during the next 10-year ISI. Subsequent examinations at the 10-year ISI interval.	100% of accessible surfaces (see BAW-2248A, page 4.3 and Table 4-1). See Figure 4-11.
MRP-227 Revision 1 entries **B3. Vent Valve Assembly** a. Vent valve top retaining ring b. Vent valve bottom retaining ring	NO CHANGE	Cracking (TE), including the detection of surface irregularities, such as damaged or fractured material in the retaining ring flanged region, or missing material (Note 3)	NO CHANGE	Visual (VT-3) examination during the next 10-year ISI interval. Subsequent examination during each 10-year ISI interval.	100% of accessible surfaces (limited accessibility) See Figure 4-10.
MRP-227 Revision 1-A entries **B3. Vent Valve Assembly** a. Vent valve top retaining ring b. Vent valve bottom retaining ring	NO CHANGE	NO CHANGE	NO CHANGE	Visual (VT-3) examination during the next 10-year ISI interval. Subsequent examination during each 10-year ISI interval. (Note 10)	NO CHANGE

Table 4-1: B&W plants Primary items (continued)

Item	Applicability	Effect (Mechanism)	Expansion Link	Exam. Meth/Freq.	Exam. Coverage
MRP-227 Revision 2 entries a. Vent valve top retaining ring b. Vent valve bottom retaining ring	All plants 40 < years ≤ 80	Cracking (TE), including the detection of surface irregularities, such as damaged or fractured material in the retaining ring flanged region, or missing material (Note 5)	NO CHANGE	Visual (VT-3) examination during the next 10-year ISI interval. (Note 7) Subsequent examination during each 10-year ISI interval.	NO CHANGE
Existing MRP-227-A entries **Core Support Shield Assembly** Upper core barrel (UCB) bolts and their locking devices	All plants	Bolts: cracking (SCC) Locking devices: loss of material, damaged, distorted, or missing locking devices (wear or fatigue damage by failed bolts).	UTS bolts and LTS studs/nuts or bolts and their locking devices SSHT studs/nuts or bolts and their locking devices (CR-3 and DB only) Lower grid shock pad bolts and their locking devices (TMI-1 only)	Volumetric examination (UT) of the bolts within two refueling outages from 1/1/2006 or next 10-year ISI interval, whichever is first. Subsequent examination at the 10-year ISI interval unless an evaluation of the baseline results submitted for NRC staff approval justifies a longer interval between examinations. Visual (VT-3) examination of bolt locking devices at the 10-year ISI interval.	100% of accessible bolts and their locking devices. (Note 3) See Figure 4-7.

Table 4-1: B&W plants Primary items (continued)

Item	Applicability	Effect (Mechanism)	Expansion Link	Exam. Meth/Freq.	Exam. Coverage
MRP-227 Revision 1 entries **B7. Core Support Shield Assembly** Upper core barrel (UCB) bolts and their locking devices	NO CHANGE	Bolts: cracking (SCC—all bolts, fatigue–original bolts only) Locking devices: loss of material, damaged or distorted or missing locking devices (wear or fatigue damage by failed bolts)	UTS bolts and LTS studs/nuts or bolts and their locking devices SSHT bolts and their locking devices (DB only)	Bolts: volumetric (UT) examination during the next 10-year ISI interval. Locking devices: visual (VT-3) examination during the next 10-year ISI interval. Subsequent examination during each 10-year ISI interval unless an evaluation of the baseline results, submitted for NRC staff approval, justifies a longer interval between examinations.	100% of accessible bolts and their locking devices. (Note 6) See Figure 4-7.
MRP-227 Revision 1-A entries **B7. Core Support Shield Assembly** Upper core barrel (UCB) bolts and their locking devices	Entry remained unchanged within MRP-227 Revision 1-A.				

Table 4-1: B&W plants Primary items (continued)

Item	Applicability	Effect (Mechanism)	Expansion Link	Exam. Meth/Freq.	Exam. Coverage
MRP-227 Revision 2 entries **B7. Core Support Shield Assembly** Upper core barrel (UCB) bolts	All plants 40 < years ≤ 60	Bolts: cracking (SCC—all bolts, fatigue–original bolts only)	B7.1. UTS bolts and B8.1. LTS bolts or studs and nuts (Note 10) B7.2. SSHT bolts (DB)	Bolts: volumetric (UT) examination during the next 10-year ISI interval. Subsequent examination during each 10-year ISI interval unless an evaluation of the baseline results, submitted for NRC staff approval, justifies a longer interval between examinations.	100% of accessible bolts. (Note 8) See Figure 4-7.
MRP-227 Revision 2 entries **B7. Core Support Shield Assembly** Upper core barrel (UCB) bolts	All plants 60 < years ≤ 80	ISR/IC/fatigue/wear) (Note 9)	B7.1. UTS bolts and B8.1. LTS bolts or studs and nuts (Note 10)	Bolts: volumetric (UT) examination during the next 10-year ISI interval. Subsequent examination during each 10-year ISI interval unless an evaluation of the baseline results, submitted for NRC staff approval, justifies a longer interval between examinations.	100% of accessible bolts. (Note 8) See Figure 4-7.

Table 4-1: B&W plants Primary items (continued)

Item	Applicability	Effect (Mechanism)	Expansion Link	Exam. Meth/Freq.	Exam. Coverage
Existing MRP-227-A entries **Core Barrel Assembly** Lower core barrel (LCB) bolts and their locking devices	All plants	Bolt: cracking (SCC) Locking devices: Loss of material, damaged, distorted or missing locking devices (wear or fatigue damage by failed bolts).	UTS bolts and LTS studs/nuts or bolts and their locking devices SSHT studs/nuts or bolts and their locking devices (CR-3 and DB only) Lower grid shock pad bolts and their locking devices (TMI-1 only)	Volumetric examination (UT) of the bolts during the next 10-year ISI interval from 1/1/2006. Subsequent examination at the 10-year ISI interval unless an evaluation of the baseline results submitted for NRC staff approval justifies a longer interval between examinations. Visual (VT-3) examination of bolt locking devices at the 10-year ISI interval.	100% of accessible bolts and their locking devices (Note 3) See Figure 4-8.
MRP-227 Revision 1 entries **B8. Core Barrel Assembly** Lower core barrel (LCB) bolts and their locking devices	NO CHANGE	Bolts: cracking (SCC, IC/ISR/fatigue/wear) (Note 7) Locking devices: Loss of material, damaged or distorted or missing locking devices (wear or fatigue damage by failed bolts)	UTS bolts and LTS studs/nuts or bolts and their locking devices SSHT bolts and their locking devices (DB only)	Bolts: volumetric (UT) examination during the next 10-year ISI interval. Locking devices: visual (VT-3) examination during the next 10-year ISI interval. Subsequent examination during each 10-year ISI interval unless an evaluation of the baseline results, submitted for NRC staff approval, justifies a longer interval between examinations.	100% of accessible bolts and their locking devices (Note 6) See Figure 4-8(a).

Table 4-1: B&W plants Primary items (continued)

Item	Applicability	Effect (Mechanism)	Expansion Link	Exam. Meth/Freq.	Exam. Coverage
MRP-227 Revision 1-A entries **B8. Core Barrel Assembly** Lower core barrel (LCB) bolts and their locking devices	Entry remained unchanged within MRP-227 Revision 1-A.				
MRP-227 Revision 2 entries **B8. Core Barrel Assembly** Lower core barrel (LCB) bolts	All plants 40 < years ≤ 60	Bolts: cracking (SCC, ISR/IC/fatigue/ wear) (Note 9)	B7.1. UTS bolts and B8.1. LTS bolts or studs and nuts (Note 10) B7.2. SSHT bolts (DB)	Bolts: volumetric (UT) examination during the next 10-year ISI interval. Subsequent examination during each 10-year ISI interval unless an evaluation of the baseline results, submitted for NRC staff approval, justifies a longer interval between examinations.	100% of accessible bolts (Note 8) See Figure 4-8(a) and (b).
MRP-227 Revision 2 entries **B8. Core Barrel Assembly** Lower core barrel (LCB) bolts	All plants 60 < years ≤ 80	Bolts: cracking (SCC, ISR/IC/fatigue/ wear) (Notes 9,11)	B7.1. UTS bolts and B8.1. LTS bolts or studs and nuts (Note 10)	Bolts: volumetric (UT) examination during the next 10-year ISI interval. Subsequent examination during each 10-year ISI interval unless an evaluation of the baseline results, submitted for NRC staff approval, justifies a longer interval between examinations.	100% of accessible bolts (Note 8) See Figure 4-8(a) and (b).

Table 4-1: B&W plants Primary items (continued)

Item	Applicability	Effect (Mechanism)	Expansion Link	Exam. Meth/Freq.	Exam. Coverage
Existing MRP-227-A entries **Core Barrel Assembly** Baffle-to-former bolts	All plants	Cracking (IASCC, IE, overload) (Note 4)	Baffle-to-baffle bolts Core barrel-to-former bolts	Baseline volumetric examination (UT) no later than two refueling outages from the beginning of the license renewal period with subsequent examination after 10 additional years.	100% of accessible bolts (Note 3) See Figure 4-2.
MRP-227 Revision 1 entries **B9. Core Barrel Assembly** Baffle-to-former bolts	All plants	Cracking (IASCC, IE, IC/ISR/fatigue/wear, overload) (Notes 3, 7)	Baffle-to-baffle bolts Core barrel-to-former bolts	Volumetric (UT) examination during the next 10-year ISI interval. Subsequent examination during each 10-year ISI interval.	100% of accessible bolts (Note 6) See Figure 4-2.
MRP-227 Revision 1-A entries **B9. Core Barrel Assembly** Baffle-to-former bolts	NO CHANGE	NO CHANGE	NO CHANGE	Volumetric (UT) examination during the next 10-year ISI interval. Subsequent examination during each 10-year ISI interval. (Note 11)	NO CHANGE

Table 4-1: B&W plants Primary items (continued)

Item	Applicability	Effect (Mechanism)	Expansion Link	Exam. Meth/Freq.	Exam. Coverage
MRP-227 Revision 2 entries **B9. Core Barrel Assembly** Baffle-to-former bolts	All plants 40 < years ≤ 60	Cracking (IASCC, IE, ISR/IC/fatigue/ wear, overload) (Notes 5, 9)	NO CHANGE	Volumetric (UT) examination during the next 10-year ISI interval. Subsequent examination during each 10-year ISI interval. (Note 12)	100% of accessible bolts (Note 8) See Figure 4-2.
MRP-227 Revision 2 entries **B9. Core Barrel Assembly** Baffle-to-former bolts	All plants 60 < years ≤ 80	Cracking (IASCC, IE, ISR/IC/fatigue/ wear, overload) (Notes 5, 9)	B9.1. Baffle-to-baffle bolts B9.2. Core barrel-to-former bolts (Note 13)	Volumetric (UT) examination during the next 10-year ISI interval. Subsequent examination during each 10-year ISI interval. (Note 12)	100% of accessible bolts (Note 8) See Figure 4-2.
Existing MRP-227-A entries **Core Barrel Assembly** Baffle plates	All plants	Cracking (IE), including the detection of readily detectable cracking in the baffle plates	Core barrel cylinder (including vertical and circumferential seam welds), Former plates	Visual (VT-3) examination during the next 10-year ISI. Subsequent examinations at the 10-year ISI interval.	100% of the accessible surface within 1 in. (2.54 cm) around each flow and bolt hole. See Figure 4-2.

Table 4-1: B&W plants Primary items (continued)

Item	Applicability	Effect (Mechanism)	Expansion Link	Exam. Meth/Freq.	Exam. Coverage
MRP-227 Revision 1 entries **B10. Core Barrel Assembly** Baffle plates	All plants	Cracking (IE), including the detection of readily detectable cracking (Note 3)	Core barrel cylinder (including vertical and circumferential seam welds) Former plates Lower grid rib section	Visual (VT-3) examination during the next 10-year ISI interval. Subsequent examination during each 10-year ISI interval	100% of the accessible surfaces within 1 in. (2.54 cm) around each flow and bolt hole. See Figure 4-2.
MRP-227 Revision 1-A entries **B10. Core Barrel Assembly** Baffle plates	NO CHANGE	NO CHANGE	NO CHANGE	Visual (VT-3) examination during the next 10-year ISI interval. Subsequent examination during each 10-year ISI interval. (Note 10)	NO CHANGE
MRP-227 Revision 2 entries **B10. Core Barrel Assembly** Baffle plates	All plants 40 < years ≤ 60	Cracking (IE), including the detection of readily detectable cracking (Note 5)	B10.3. Lower grid rib section	Visual (VT-3) examination during the next 10-year ISI interval. Subsequent examination during each 10-year ISI interval.	100% of the accessible surfaces within 1 in. (2.54 cm) around each flow/slot and bolt hole. See Figure 4-2.

Table 4-1: B&W plants Primary items (continued)

Item	Applicability	Effect (Mechanism)	Expansion Link	Exam. Meth/Freq.	Exam. Coverage
MRP-227 Revision 2 entries **B10. Core Barrel Assembly** Baffle plates	All plants 60 < years ≤ 80	Cracking (IE, VS), including the detection of readily detectable cracking (Note 5)	B10.2. Former plates	Visual (VT-3) examination during the next 10-year ISI interval. Subsequent examination during each 10-year ISI interval.	100% of the accessible surfaces within one inch around each flow/slot and bolt hole. See Figure 4-2.
Existing MRP-227-A entries **Core Barrel Assembly** Locking devices, including locking welds, of baffle-to-former bolts and internal baffle-to-baffle bolts	All plants	Cracking (IASCC, IE, overload), including the detection of missing, nonfunctional, or removed locking devices or welds	Locking devices, including locking welds, for the external baffle-to-baffle bolts and core barrel-to-former bolts	Visual (VT-3) examination during the next 10-year ISI. Subsequent examinations on the 10-year ISI interval.	100% of accessible baffle-to-former and internal baffle-to-baffle bolt locking devices. (Note 3) See Figure 4-2.
MRP-227 Revision 1 entries **B11. Core Barrel Assembly** Locking devices, including locking welds, of baffle-to-former bolts and internal baffle-to-baffle bolts	All plants	Cracking (IASCC, IE), including the detection of missing, non-functional, or removed locking devices or welds (Note 3, 8)	Locking devices, including locking welds, of the external baffle-to-baffle bolts and core barrel-to-former bolts (Note 8)	Visual (VT-3) examination during the next 10-year ISI interval. Subsequent examination during each 10-year ISI interval.	100% of accessible baffle-to-former and internal baffle-to-baffle bolt locking devices and locking welds. (Note 6) See Figure 4-2.

Table 4-1: B&W plants Primary items (continued)

Item	Applicability	Effect (Mechanism)	Expansion Link	Exam. Meth/Freq.	Exam. Coverage
MRP-227 Revision 1-A entries **B11.Core Barrel Assembly** Locking devices, including locking welds, of baffle-to-former bolts and internal baffle-to-baffle bolts	NO CHANGE	Locking devices: cracking (IASCC, IE), including the detection of missing, nonfunctional, or removed locking devices (Note 3) Locking welds: cracking (IE) including the detection of missing, nonfunctional, or removed locking device welds (Notes 3, 8)	NO CHANGE	Visual (VT-3) examination during the next 10-year ISI interval. Subsequent examination during each 10-year ISI interval. (Note 10)	NO CHANGE
MRP-227 Revision 2 entries **B11.Core Barrel Assembly** Locking devices, including locking welds, for the baffle-to-former bolts and internal baffle-to-baffle bolts	All plants 40 < years ≤ 80	Locking devices: cracking (IASCC, IE), including the detection of missing, nonfunctional, or removed locking devices (Notes 5, 14) Locking welds: cracking (IE), including the detection of missing, nonfunctional, or removed locking device welds (Note 5)	B11.1. Locking devices, including locking welds, for the external baffle-to-baffle bolts and core barrel-to-former bolts (Note 14)	Visual (VT-3) examination during the next 10-year ISI interval. Subsequent examination during each 10-year ISI interval.	100% of accessible baffle-to-former and internal baffle-to-baffle bolt locking devices and locking welds. (Note 8) See Figure 4-2.

Table 4-1: B&W plants Primary items (continued)

Item	Applicability	Effect (Mechanism)	Expansion Link	Exam. Meth/Freq.	Exam. Coverage
Existing MRP-227-A entries **Flow Distributor Assembly** Flow distributor (FD) bolts and their locking devices	All plants	Bolt: cracking (SCC) Locking devices: loss of material, damaged or distorted or missing locking devices (wear or fatigue damage by failed bolts).	UTS bolts and LTS studs/nuts or bolts and their locking devices. SSHT studs/nuts or bolts and their locking devices (CR-3 and DB only) Lower grid shock pad bolts and their locking devices (TMI-1 only)	Volumetric examination (UT) of the bolts during the next 10-year ISI interval from 1/1/2006. Subsequent examination on the 10-year ISI interval unless an evaluation of the baseline results, submitted for NRC staff approval, justifies a longer interval between examinations. Visual (VT-3) examination of bolt locking devices at the 10-year ISI interval.	100% of accessible bolts and their locking devices. (Note 3) See Figure 4-8.
MRP-227 Revision 1 entries **B12.Flow Distributor Assembly** Flow distributor (FD) bolts and their locking devices	All plants	Bolts: cracking (SCC, fatigue) Locking devices: loss of material, damaged or distorted or missing locking devices (wear or fatigue damage by failed bolts)	UTS bolts and LTS studs/nuts or bolts and their locking devices SSHT bolts and their locking devices (DB only)	Bolts: volumetric (UT) examination during the next 10-year ISI interval. Locking devices: visual (VT-3) examination during the next 10-year ISI interval. Subsequent examination during each 10-year ISI interval unless an evaluation of the baseline results, submitted for NRC staff approval, justifies a longer interval between examinations.	100% of accessible bolts and their locking devices. (Note 6) See Figure 4-8(a).

Table 4-1: B&W plants Primary items (continued)

Item	Applicability	Effect (Mechanism)	Expansion Link	Exam. Meth/Freq.	Exam. Coverage
MRP-227 Revision 1-A entries **B12. Flow Distributor Assembly** Flow distributor (FD) bolts and their locking devices	Entry remained unchanged within MRP-227 Revision 1-A.				
MRP-227 Revision 2 entries **B12. Flow Distributor Assembly** Flow distributor (FD) bolts	All plants 40 < years ≤ 60	Bolts: cracking (SCC, fatigue)	B7.1. UTS bolts and B8.1. LTS bolts or studs and nuts (Note 10) B7.2. SSHT bolts (DB)	Bolts: volumetric (UT) examination during the next 10-year ISI interval. Subsequent examination during each 10-year ISI interval unless an evaluation of the baseline results, submitted for NRC staff approval, justifies a longer interval between examinations.	100% of accessible bolts. (Note 8) See Figure 4-8(b).
MRP-227 Revision 2 entries **B12. Flow Distributor Assembly** Flow distributor (FD) bolts	All plants 60 < years ≤ 80	Bolts: cracking (SCC, fatigue)	B7.1. UTS bolts and B8.1. LTS bolts or studs and nuts (Note 10)	Bolts: volumetric (UT) examination during the next 10-year ISI interval. Subsequent examination during each 10-year ISI interval unless an evaluation of the baseline results, submitted for NRC staff approval, justifies a longer interval between examinations.	100% of accessible bolts. (Note 8) See Figure 4-8(b).

Table 4-1: B&W plants Primary items (continued)

Item	Applicability	Effect (Mechanism)	Expansion Link	Exam. Meth/Freq.	Exam. Coverage
Existing MRP-227-A entries **Lower Grid Assembly** Alloy X-750 dowel-to-guide block welds	All plants	Cracking (SCC), including the detection of separated or missing locking welds, or missing dowels	Alloy X-750 dowel locking welds to the upper and lower grid fuel assembly support pads	Initial visual (VT-3) examination no later than two refueling outages from the beginning of the license renewal period. Subsequent examinations at the 10-year ISI interval.	Accessible surfaces of 100% of the 24 dowel-to-guide block welds. See Figure 4-4.
MRP-227 Revision 1 entries **B13. Lower Grid Assembly** Alloy X-750 dowel-to-guide block welds	All plants (except DB) (Note 9)	Cracking (SCC), including the detection of separated or missing locking welds, or missing dowels	Alloy X-750 dowel locking welds to the upper and lower grid fuel assembly support pads	Visual (VT-3) examination during the next 10-year ISI interval. Subsequent examination during each 10-year ISI interval.	Accessible surfaces of 100% of the dowel-to-guide block welds. See Figure 4-4.
MRP-227 Revision 1-A entries **B13. Lower Grid Assembly** Alloy X-750 dowel-to-guide block welds	Entry remained unchanged within MRP-227 Revision 1-A.				
MRP-227 Revision 2 entries **B13. Lower Grid Assembly** Alloy X-750 dowel-to-guide block weld	All plants (except DB) 40 < years ≤ 80	Cracking (SCC), including the detection of separated or missing locking welds, or missing dowels	Alloy X-750 dowels-to- B13.1. upper and B13.2. lower grid fuel assembly support pad welds	Visual (VT-3) examination during the next 10-year ISI interval. Subsequent examination during each 10-year ISI interval.	Accessible surfaces of 100% of the support pad dowel locking welds. See Figure 4-4.

Table 4-1: B&W plants Primary items (continued)

Item	Applicability	Effect (Mechanism)	Expansion Link	Exam. Meth/Freq.	Exam. Coverage
Existing MRP-227-A entries **In-Core Monitoring Instrumentation (IMI) Guide Tube Assembly** IMI guide tube spiders IMI guide tube spider-to-lower grid rib section welds	All plants	Cracking (TE/IE), including the detection of fractured or missing spider arms or Cracking (IE), including separation of spider arms from the lower grid rib section at the weld	Lower grid fuel assembly support pad items: pad, pad-to-rib section welds, Alloy X-750 dowel, cap screw, and their locking welds (Note: the pads, dowels, and cap screws are included because of IE of the welds)	Initial visual (VT-3) examination no later than two refueling outages from the beginning of the license renewal period. Subsequent examinations at the 10-year ISI interval.	100% of top surfaces of 52 spider castings and welds to the adjacent lower grid rib section. See Figures 4-3 and 4-6.
MRP-227 Revision 1 entries **B15. In-Core Monitoring Instrumentation (IMI) Guide Tube Assembly** IMI guide tube spiders IMI guide tube spider-to-lower grid rib section welds	All plants	Spiders: cracking (TE/IE), including the detection of fractured or missing spider arms (Note 3) Spider welds: cracking (IE), including separation of spider arms from the lower grid rib section at the weld (Note 3)	Lower grid fuel assembly support pad component items: pad, pad-to-rib section welds, Alloy X-750 dowel, cap screws, and their locking welds (Note: the pads, dowels, and cap screws are included because of IE of the welds)	Visual (VT-3) examination during the next 10-year ISI interval. Subsequent examination during each 10-year ISI interval.	Spiders: 100% of the accessible top surfaces and 100% of the accessible spider surfaces adjacent to the spider casting welds. Spider welds: 100% of the accessible welds to the adjacent lower grid rib section. See Figures 4-3 and 4-6.

Table 4-1: B&W plants Primary items (continued)

Item	Applicability	Effect (Mechanism)	Expansion Link	Exam. Meth/Freq.	Exam. Coverage
MRP-227 Revision 1-A entries **B15. In-Core Monitoring Instrumentation (IMI) Guide Tube Assembly** IMI guide tube spiders IMI guide tube spider-to-lower grid rib section welds	NO CHANGE	Spiders: cracking (TE/IE), including the detection of fractured or missing spider arms (Note 3) Spider welds: cracking (IE), including separation of spider arms from the lower grid rib section at the weld (Note 3)	NO CHANGE	NO CHANGE	Spiders: 100% of the accessible top surfaces and 100% of the accessible spider surfaces adjacent to the spider casting welds. Spider Welds: 100% of the accessible welds to the adjacent lower grid rib section. See Figures 4-3 and 4-6.
MRP-227 Revision 2 entries **B15. In-Core Monitoring Instrumentation (IMI) Guide Tube Assembly** a. IMI guide tube spiders b. IMI guide tube spiders-to-lower grid rib section welds	All plants 40 < years ≤ 60	Spiders: cracking (IE), including the detection of fractured or missing spider arms (Notes 5,21) Spider welds: cracking (IE), including separation of spider arms from the lower grid rib section at the weld (Note 5)	B15.1. Lower grid fuel assembly support pad items: pad, pad-to-rib section welds, Alloy X-750 dowels, cap screw, and their locking welds (Note: the pad, dowels, and cap screw are included because of IE of the welds)	Visual (VT-3) examination during the next 10-year ISI interval. Subsequent examination during each 10-year ISI interval.	Spiders: 100% of the accessible top surfaces and 100% of the accessible spider surfaces 0.25 in. (0.64 cm) adjacent to the spider casting welds. (Note 17) Spider welds: 100% of the accessible welds to the adjacent lower grid rib section. See Figures 4-3 and 4-6.

Table 4-1: B&W plants Primary items (continued)

Item	Applicability	Effect (Mechanism)	Expansion Link	Exam. Meth/Freq.	Exam. Coverage
MRP-227 Revision 2 entries **B15. In-Core Monitoring Instrumentation (IMI) Guide Tube Assembly** a. IMI guide tube spiders b. IMI guide tube spiders-to-lower grid rib section welds	All plants 60 < years ≤ 80	Spiders: cracking (IE), including the detection of fractured or missing spider arms (Notes 5,21) Spider welds: cracking (IE), including separation of spider arms from the lower grid rib section at the weld (Note 5)	B15.1. Lower grid fuel assembly support pad items: pad, pad-to-rib section welds, Alloy X-750 dowels, cap screw, and their locking welds B15.2. Upper grid fuel assembly support pad items: pad, Alloy X-750 dowels, cap screw, and their locking welds (secondary Expansion of B15.1. Lower grid fuel assembly support pad items)	Visual (VT-3) examination during the next 10-year ISI interval. Subsequent examination during each 10-year ISI interval.	Spiders: 100% of the accessible top surfaces and 100% of the accessible spider surfaces 0.25 in. (0.64 cm) adjacent to the spider casting welds. (Note 17) Spider welds: 100% of the accessible welds to the adjacent lower grid rib section. See Figures 4-3 and 4-6.
Entry not existing in MRP-227-A entries *The following items did not exist in the MRP-227-A table entries; items added as result of plant-specific review(s).*					

Table 4-1: B&W plants Primary items (continued)

Item	Applicability	Effect (Mechanism)	Expansion Link	Exam. Meth/Freq.	Exam. Coverage
MRP-227 Revision 1 entries **B4. Vent Valve Assembly** Original locking devices (pressure plate, spring retainer, spring, U-cover)	Note 4	Loss of material from locking device (wear associated with jack screw spring and pressure plate)	None	Visual (VT-3) examination during the next 10-year ISI interval (Note 5) Subsequent examination during each 10-year ISI interval	100% of accessible surfaces, including the overall valve symmetry in the mounting ring and the overall jackscrew thread extension from the lower retaining ring threaded flange. See Figure 4-10.
MRP-227 Revision 1-A entries **B4. Vent Valve Assembly** Original locking devices (pressure plate, spring retainer, spring, U-cover)	Entry remained unchanged within MRP-227 Revision 1-A.				
MRP-227 Revision 2 entries **B4. Vent Valve Assembly** Original locking devices (pressure plates, spring retainers, springs, U-covers)	All plants with original vent valve locking devices 40 < years ≤ 80	NO CHANGE	NO CHANGE	Visual (VT-3) examination during the next 10-year ISI interval. (Note 7) Subsequent examination during each 10-year ISI interval.	NO CHANGE

Table 4-1: B&W plants Primary items (continued)

Item	Applicability	Effect (Mechanism)	Expansion Link	Exam. Meth/Freq.	Exam. Coverage
MRP-227 Revision 1 entries **B5. Vent Valve Assembly** Original locking devices (key ring, pin)	Note 4	Cracking (TE), including the detection of reportable indications	None	Visual (VT-3) examination during the next 10-year ISI interval. (Note 5) Subsequent examination during each 10-year ISI interval.	100% of accessible surfaces, including the overall valve symmetry in the mounting ring and the overall jackscrew thread extension from the lower retaining ring threaded flange. See Figure 4-10.
MRP-227 Revision 1-A entries **B5. Vent Valve Assembly** Original locking devices (key ring, pin)	Entry remained unchanged within MRP-227 Revision 1-A.				
MRP-227 Revision 2 entries **B5. Vent Valve Assembly** Original locking devices (key rings, pins)	All plants with original vent valve locking devices 40 < years ≤ 80	Cracking (TE), including the detection of reportable indications (Note 5)	NO CHANGE	Visual (VT-3) examination during the next 10-year ISI interval. (Note 7) Subsequent examination during each 10-year ISI interval.	NO CHANGE

Table 4-1: B&W plants Primary items (continued)

Item	Applicability	Effect (Mechanism)	Expansion Link	Exam. Meth/Freq.	Exam. Coverage
MRP-227 Revision 1 entries **B6. Vent Valve Assembly** Modified locking devices (bolt locking cup, jackscrew locking cup, bolted block)	Note 4	Cracking (SCC), including detection of fractured or missing locking cups and welds, or the bolted block	None	Visual (VT-3) examination during the next 10-year ISI interval. (Note 5) Subsequent examination during each 10-year ISI interval.	100% of accessible surfaces, including the overall valve symmetry in the mounting ring and the overall jackscrew thread extension from the lower retaining ring threaded flange. See Figure 4-10.
MRP-227 Revision 1-A entries **B6. Vent Valve Assembly** Modified locking devices (bolt locking cup, jackscrew locking cup, bolted block)	Entry remained unchanged within MRP-227 Revision 1-A.				
MRP-227 Revision 2 entries **B6. Vent Valve Assembly** Modified locking devices (bolt crimped locking cups, jackscrew crimped locking cups, bolted blocks)	All plants with modified vent valve locking devices 40 < years ≤ 80	NO CHANGE	NO CHANGE	Visual (VT-3) examination during the next 10-year ISI interval. (Note 7) Subsequent examination during each 10-year ISI interval.	NO CHANGE

Table 4-1: B&W plants Primary items (continued)

Item	Applicability	Effect (Mechanism)	Expansion Link	Exam. Meth/Freq.	Exam. Coverage
MRP-227 Revision 1 entries **B14. Lower Grid Assembly** Shock pad bolts and their locking devices	TMI-1	Bolts: cracking (SCC, fatigue) Locking devices: loss of material, damaged or distorted or missing locking devices (wear or fatigue damage by failed bolts)	UTS bolts and LTS bolts and their locking devices	Bolts: volumetric (UT) examination during the next 10-year ISI interval. Locking devices: visual (VT-3) examination during the next 10-year ISI interval. Subsequent examination during each 10-year ISI interval unless an evaluation of the baseline results, submitted for NRC staff approval, justifies a longer interval between examinations.	100% of accessible bolts and their locking devices. (Note 6) See Figure 4-4.
MRP-227 Revision 1-A entries **B14. Lower Grid Assembly** Shock pad bolts and their locking devices	Entry remained unchanged within MRP-227 Revision 1-A.				
MRP-227 Revision 2 entries This item has been removed from MRP-227.	This item has been removed from MRP-227.				

Table 4-1: B&W plants Primary items (continued)

Item	Applicability	Effect (Mechanism)	Expansion Link	Exam. Meth/Freq.	Exam. Coverage
Entry not existing in MRP-227-A, MRP-227, Revision 1, or MRP-227, Revision 1-A entries *The following items did not exist in the MRP-227-A, MRP-227, Revision 1, or MRP-227, or Revision 1-A table entries.*					
MRP-227 Revision 2 entries **B16. Core Barrel Assembly** Core barrel cylinder top flange circumferential weld HAZ	Note 16 40 < years ≤ 80	Cracking (SCC, IE), including the detection of surface-breaking crack-like indications and/or readily detectable cracking (Note 5)	None	Enhanced visual (EVT-1), volumetric (UT), or eddy current (ECT) examination during the current 10-year ISI interval. Subsequent examination during each 10-year ISI interval. Alternatively, in lieu of examination, this item can be addressed by evaluation that is submitted for NRC staff approval.	100% of the accessible OD surfaces of 0.75 in. (1.91 cm) of the adjacent base metal to the core barrel cylinder top flange weld. (Notes 17, 18) See Figure 4-11.

Table 4-1: B&W plants Primary items (continued)

Item	Applicability	Effect (Mechanism)	Expansion Link	Exam. Meth/Freq.	Exam. Coverage
MRP-227 Revision 2 entries **B17. Core Barrel Assembly** Core barrel top and bottom cylinders center circumferential weld regions	Note 19 60 < years ≤ 80	Cracking (IASCC, IE), including the detection of surface-breaking cracklike indications and/or readily detectable cracking (Note 5)	None	Enhanced visual (EVT-1), volumetric (UT), or eddy current (ECT) examination no later than two refueling outages from the beginning of the subsequent license renewal period. Subsequent examination during each 10-year ISI interval. Alternatively, in lieu of examination, this item can be addressed by evaluation that is submitted for NRC staff approval.	100% of the accessible weld length of the OD of the center circumferential weld and 0.75 in. (1.91 cm) of the adjacent base metal. (Notes 17,18) See Figure 4-11.
MRP-227 Revision 2 entries **B18. Lower Grid Assembly** Lower grid rib section	All plants 60 < years ≤ 80	Cracking (IE), including the detection of readily detectable cracking (Note 5)	None	Visual (VT-3) examination no later than two refueling outages from the beginning of the subsequent license renewal period. Subsequent examination during each 10-year ISI interval.	100% of accessible surfaces of 0.25 in. (0.64 cm) of the adjacent base metal of the lower grid rib section to the spider-to-lower grid rib section welds. (Note 17) See Figure 4-3 and Figure 4-6.

Table 4-1: B&W plants Primary items (continued)

Item	Applicability	Effect (Mechanism)	Expansion Link	Exam. Meth/Freq.	Exam. Coverage
MRP-227 Revision 2 entries **B19. Core Barrel Assembly** Surveillance specimen holder tube (SSHT) bolts and their locking devices	DB 60 < years ≤ 80	Bolts: cracking (IASCC, IE, ISR/IC/ fatigue/wear) (Notes 5, 9, 15) Locking devices: cracking (IE), including the detection of missing, nonfunctional, or removed locking devices (Notes 5, 15)	None	Bolts: volumetric (UT) examination no later than two refueling outages from the beginning of the subsequent license renewal period. Locking devices: visual (VT-3) examination no later than two refueling outages from the beginning of the subsequent license renewal period. Subsequent examination during each 10-year ISI interval unless an evaluation of the baseline results, submitted for NRC staff approval, justifies a longer interval between examinations.	100% of accessible bolts and their locking devices. (Note 8) See Figure 4-8(c).

Table 4-1: B&W plants Primary items (continued)

Item	Applicability	Effect (Mechanism)	Expansion Link	Exam. Meth/Freq.	Exam. Coverage
MRP-227 Revision 2 entries **B20. Core Barrel Assembly** Core barrel cylinder top flange circumferential weld regions	All plants 60 < years ≤ 80 (Note 20)	Cracking (fatigue), including the detection of linear indications	B20.1. Plenum cover weldment ribs to each other welds B20.2. Core support shield cylinder top flange	Enhanced visual (EVT-1), volumetric (UT), or eddy current (ECT) examination no later than two refueling outages from the beginning of the subsequent license renewal period. Subsequent examination during each 10-year ISI interval. Alternatively, in lieu of examination, this item can be addressed by evaluation that is submitted for NRC staff approval.	100% of the accessible weld length of one side of the top flange circumferential weld and 0.75 in. (1.91 cm) of the adjacent base metal. (Notes 17,18) See Figure 4-11.
MRP-227 Revision 2 entries **B21. Lower Grid Assembly** Alloy X-750 dowels-to-lower grid fuel assembly support pad welds	DB 40 < years ≤ 80	Cracking (SCC), including the detection of separated or missing locking welds, or missing dowels	B13.1. Alloy X-750 dowels-to-upper grid fuel assembly support pad welds	Visual (VT-3) examination during the next 10-year ISI interval. Subsequent examination during each 10-year ISI interval.	Accessible surfaces of 100% of the dowels-to-lower grid fuel assembly support pad welds. See Figure 4-6.

Table 4-1: B&W plants Primary items (continued)

MRP-227 Revision 1 entries

Notes:

1. Examination acceptance criteria and expansion criteria for the B&W component items and welds are detailed in Table 5-1.
2. Initial examinations may be scheduled concurrently with the next 10-year ISI but shall be performed no later than the final outage of the current 10-year ISI interval at the time of entry into the of extended operation, except where otherwise noted.
3. Loss of ductility and fracture toughness, which are induced by thermal aging or neutron irradiation embrittlement, are not directly monitored. These effects are indirectly managed by performing periodic visual examinations capable of detecting cracking in the component.
4. As of May 2014, TMI-1 and DB have been verified to have original vent valve assembly locking devices only, whereas ONS-1, ONS-2, ONS-3, and ANO-1 have both original and modified vent valve assembly locking devices installed.
5. In addition to the Primary vent valve assembly visual (VT-3) examinations identified in this table, the following testing and inspection requirements are currently performed and will continue to be performed by the B&W units:

   A verification of the operation of each vent valve shall also be performed through manual actuation of the valve. Verify that the valves are not stuck in the open position and that no abnormal degradation has occurred. Examine the valves for evidence of leakage between the valve disk and the valve body (that is, flow lines across the sealing surface), cracking of lock welds and locking cups, jackscrews for proper position, and wear. The frequency is defined in each unit's technical specifications or in their pump and valve in-service test programs (see BAW-2248A, page 4-3, and Table 4-1).
6. A minimum of 75% of the total population (examined + unexamined), including coverage consistent with the Expansion criteria in Section 5.3 of this document, must be examined for inspection credit.
7. The primary aging degradation mechanisms for loss of joint tightness for this item are IC and ISR. Fatigue and wear, which can also lead to cracking, are secondary aging degradation mechanisms after significant stress relaxation and loss of preload have occurred due to ISR/IC. Bolt stress relaxation cannot readily be inspected by NDE. Only bolt cracking is inspected by UT inspection.
8. The aging degradation mechanism of IASCC is applicable only to the baffle-to-former bolt and internal baffle-to-baffle bolt locking devices, not the baffle-to-former bolt and internal baffle-to-baffle bolt locking device welds. There are no Expansion component items for the baffle-to-former bolt and internal baffle-to-baffle bolt locking device welds for IASCC.
9. For the alternate configuration at DB, the difference in configuration shall be addressed on a unit-specific basis.

Table 4-1: B&W plants Primary items (continued)

MRP-227 Revision 1-A entries

Notes:

1. Examination acceptance criteria and expansion criteria for the B&W component items and welds are detailed in Table 5-1.
2. Initial examinations may be scheduled concurrently with the next 10-year ISI but shall be performed no later than the final outage of the current 10-year ISI interval at the time of entry into the period of extended operation, except where otherwise noted.
3. Loss of ductility and fracture toughness, which are induced by thermal aging or neutron irradiation embrittlement, are not directly monitored. These effects are indirectly managed by performing periodic visual examinations capable of detecting cracking in the component.
4. As of May 2014, TMI-1 and DB have been verified to have original vent valve assembly locking devices only, whereas ONS-1, ONS-2, ONS-3, and ANO-1 have both original and modified vent valve assembly locking devices installed.
5. In addition to the Primary vent valve assembly visual (VT-3) examinations identified in this table, the following testing and inspection requirements are currently performed and will continue to be performed by the B&W units:

   A verification of the operation of each vent valve shall also be performed through manual actuation of the valve. Verify that the valves are not stuck in the open position and that no abnormal degradation has occurred. Examine the valves for evidence of leakage between the valve disc and the valve body (that is, flow lines across the sealing surface), cracking of lock welds and locking cups, jackscrews for proper position, and wear. The frequency is defined in each unit's technical specifications or in their pump and valve in-service test programs (see BAW-2248A, page 4-3 and Table 4-1).
6. A minimum of 75% of the total population (examined + unexamined), including coverage consistent with the Expansion criteria in Section 5.3 of this document, must be examined for inspection credit.
7. The primary aging degradation mechanisms for loss of joint tightness for this item are IC and ISR. Fatigue and wear, which can also lead to cracking, are secondary aging degradation mechanisms after significant stress relaxation and loss of preload have occurred due to ISR/IC. Bolt stress relaxation cannot readily be inspected by NDE. Only bolt cracking is inspected by UT inspection.
8. The aging degradation mechanism of IASCC is applicable only to the baffle-to-former bolt and internal baffle-to-baffle bolt locking devices, not the baffle-to-former bolt and internal baffle-to-baffle bolt locking device welds. There are no Expansion component items for the baffle-to-former bolt and internal baffle-to-baffle bolt locking device welds for IASCC.
9. For the alternate configuration at DB, the difference in configuration shall be addressed on a unit-specific basis.
10. The term "10-year ISI interval" is intended to mean the plant's existing schedule associated with removal of the core barrel, that is, during the next scheduled 10-year ISI interval examination. As defined in the ASME B&PV Code Section XI, the first inspection interval is defined as 10 years following the initial start of plant commercial startup, and successive inspection intervals are defined as 10 years following the previous inspection interval. Each inspection interval may be extended by as much as 1 year and may be reduced without restriction, provided the examinations required for the interval have been completed. Successive intervals shall not extend more than 1 year beyond the original pattern of 10 year intervals and shall not exceed 11 years in length.
11. This assumes that all units operating as of December 2011 have performed baseline (initial) volumetric (UT) examinations no later than two refueling outages from the beginning of their first license renewal period.
12. At one of the CRGT locations at ANO-1, a device was installed to monitor water level that required removal of the center control rod drive mechanism and installation of an assembly that blocks access to all the CRGT spacer castings except the top spacer casting. Therefore, for all plants except ANO-1, 100% of the CRGT spacer castings refers to 690 CRGT spacer castings. There is no requirement to examine this set of CRGT spacer castings at this one CRGT assembly at ANO-1 and 100% is defined as 680 CRGT spacer castings for ANO-1.

Table 4-1: B&W plants Primary items (continued)

MRP-227 Revision 2 entries

Notes:

1. Applicability in this column is both for plant and renewed licensing period, as noted.
2. Examination acceptance criteria and expansion criteria for the B&W component items and welds are detailed in Table 5-1.
3. Initial examinations may be scheduled concurrently with the next 10-year ISI but shall be performed no later than the final outage of the current 10-year ISI interval at the time of entry into the period of extended operation (first or second period of extended operation), except where otherwise noted.
4. The term "10-year ISI interval" is intended to mean the plant's existing schedule associated with removal of the core barrel assembly, that is, during the next scheduled 10-year ISI interval examination. As defined in the ASME B&PV Code Section XI, the first inspection interval is defined as 10 years following the initial start of a plant's commercial startup, and successive inspection intervals are defined as 10 years following the previous inspection interval. Each inspection interval may be extended by as much as 1 year and may be reduced without restriction, provided the examinations required for the interval have been completed. Successive intervals shall not extend more than 1 year beyond the original pattern of 10-year intervals and shall not exceed 11 years in length.
5. Loss of ductility and fracture toughness, which are induced by thermal aging or neutron irradiation embrittlement, are not directly monitored. These effects are indirectly managed by performing periodic visual examinations capable of detecting cracking in the component.
6. At one of the CRGT locations at ANO-1, a device was installed to monitor water level that required removal of the center control rod drive mechanism and installation of an assembly that blocks access to all of the CRGT spacer castings except the top spacer casting. Therefore, for all plants except ANO-1, 100% of the CRGT spacer castings refers to 690 CRGT spacer castings. There is no requirement to examine this set of CRGT spacer castings at this one CRGT assembly at ANO-1, and 100% is defined as 680 CRGT spacer castings for ANO-1.
7. In addition to the Primary vent valve assembly visual (VT-3) examinations identified in this table, the following testing and inspection requirements are currently performed and will continue to be performed by the B&W plants:

   A verification of the operation of each vent valve shall also be performed through manual actuation of the valve. Verify that the valves are not stuck in the open position and that no abnormal degradation has occurred. Examine the valves for evidence of leakage between the valve disc and the valve body (that is, flow lines across the sealing surface), cracking of lock welds and locking cups, jackscrews for proper position, and wear. The frequency is defined in each plant's technical specifications or in their pump and valve in-service test programs (see BAW-2248A [25], page 4-3 and Table 4-1).
8. A minimum of 75% of the total population (examined + unexamined), including coverage consistent with the Expansion criteria in Section 5.3 of this document, must be examined for inspection credit.
9. The primary age-related degradation mechanisms for loss of joint tightness for this item are ISR/IC. Fatigue and wear, which can also lead to cracking, are secondary age-related degradation mechanisms after significant stress relaxation and loss of preload has occurred due to ISR/IC. Bolt stress relaxation cannot readily be inspected by NDE. Only bolt cracking is inspected by volumetric (UT) examination.
10. The Primary–Expansion relationship between the UCB, LCB, and FD bolts and the UTS and LTS bolts/studs and nuts is for SCC only.
11. The compression collars for the replacement LCB bolts (DB) are also considered Primary for susceptibility to ISR/IC/fatigue/wear. Ultrasonic examination of the bolt is presumed sufficient to detect the effect of these age-related degradation mechanisms from the compression collar on the applicable bolts.
12. This assumes that all plants operating as of December 2011 have performed baseline (initial) volumetric (UT) examinations no later than two refueling outages from the beginning of their first license renewal period.
13. Only the BB bolts are Expansion for VS. The CB bolts are Category A for VS.
14. The age-related degradation mechanism of IASCC is applicable only to the Primary baffle-to-former bolt and internal baffle-to-baffle bolt locking devices and Expansion external baffle-to-baffle bolt locking devices. The age-related degradation mechanism of IASCC is Category A for the core barrel-to-former bolt locking devices and all locking welds.
15. The compression collars and washers for the replacement SSHT bolts (DB) are also considered Primary for susceptibility to ISR/IC/fatigue/wear. Ultrasonic examination of the bolt is presumed sufficient to detect the effect of these age-related degradation mechanisms from the compression collar and washer on the applicable bolts.
16. Applicable to plants that have had weld repairs performed in their top flange circumferential weld after the stress relief treatment.
17. When "adjacent" base metal is specified in the inspection coverage requirement, it is intended to include the base metal heat-affected zone (HAZ) adjacent to the weld. When "weld region" is specified, it is intended to include the weld and the adjacent base metal. The adjacent base metal to be examined is defined in MRP-228.

Table 4-1: B&W plants Primary items (continued)

Notes (cont'd):

18. Examination coverage requires a minimum of 50% of the length of the specified surface of the weld being examined because of potential obstruction of the upper thermal shield restraints at the top of the core barrel cylinder.
19. Applicable to plants that have had weld repairs performed in their center circumferential weld after the stress relief treatment.
20. The following note is contained in Section 3.2, Item H, of MRP-189, Rev. 3 [10] regarding the fatigue ranking analysis used to perform the preliminary categorization with respect to fatigue:
    Note: The PWR internals fatigue ranking analysis performed was specific to ONS-1, ONS-2, and ONS-3 but is considered representative for the B&W design. However, a plant-specific analysis is required to validate applicability to a given non-ONS plant when implementing this revision of MRP-189 or the associated downstream reports.
21. Based on review of original fabrication records, the ferrite content of a partial representation of the IMI guide tube spiders is known and less than the screening criteria for TE in Type CF8 castings. It is possible that the remainder of the unknown ferrite contents, based on original fabrication records, may also be less than this screening criterion. In addition, PWROG-15032-NP [40] describes the statistical analysis of a large number of heats of CASS material used in US PWRs to determine statistical upper bounds on the ferrite content. The report demonstrates that there is a high probability that all low-molybdenum CASS (Type CF3 or CF8) used in PWR internals in the United States are below the screening criterion for TE of 20% delta ferrite.

TABLE 4-2: CE plants Primary items

Item	Applicability	Effect (Mechanism)	Expansion Link	Exam. Meth./ Freq.	Exam. Coverage
MRP-227 Revision 1-A entries **C1. Core Shroud Assembly (Bolted)** Core shroud bolts	Bolted plant designs	Cracking (IASCC, fatigue) Aging management (IE and ISR)	C1.1. Core support column bolts, C1.2. Barrel-shroud bolts	Baseline volumetric (UT) examination between 25 and 35 EFPY, with subsequent examination at a 10-year interval.	100% of accessible bolts (see Note 2). See Figure 4-25.
MRP-227 Revision 2 entries **C1. Core Shroud Assembly (Bolted)** Core shroud bolts	This component has been removed from MRP-227, Revision 2.				
MRP-227 Revision 1-A entries **C2. Core Shroud Assembly (Welded)** Core shroud plate-former plate weld	Plant designs with core shrouds assembled in two vertical sections	Cracking (IASCC) Aging management (IE)	C2.1. Remaining axial welds	Enhanced visual (EVT-1) examination no later than two refueling outages from the beginning of the license renewal period and subsequent examination at a 10-year interval.	Axial and horizontal weld seams at the core shroud re-entrant corners as visible from the core side of the shroud, within 6 in. (15 cm) of central flange and horizontal stiffeners and 0.75 in. (1.91 cm) of adjacent base metal. See Figure 4-26.

TABLE 4-2: CE plants Primary items (continued)

Item	Applicability	Effect (Mechanism)	Expansion Link	Exam. Meth./ Freq.	Exam. Coverage
MRP-227 Revision 2 entries **C2. Core Shroud Assembly (Welded)** Core shroud plate-former plate weld	Plant designs with core shrouds assembled in two vertical sections	Cracking (IASCC) Aging management (IE)	C2.1. Remaining axial welds	Enhanced visual (EVT-1) examination no later than two refueling outages from the beginning of the license renewal period and subsequent examination at a 10-year interval.	Axial and horizontal weld seams at the core shroud re-entrant corners as visible from the core side of the shroud, within 6 in. (15 cm) of central flange and horizontal stiffeners and 0.75 in. (1.91 cm) of adjacent base metal. See Figure 4-15.
MRP-227 Revision 1-A entries **C3. Core Shroud Assembly (Welded)** Shroud plates	Only plants with welded core shrouds assembled with full-height shroud plates	Cracking (IASCC) Aging management (IE)	C3.1. Remaining axial welds C3.2. Ribs and rings	Enhanced visual (EVT-1) examination no later than two refueling outages from the beginning of the license renewal period and subsequent examination at a 10-year interval.	Axial weld seams at the core shroud re-entrant corners, at the core mid-plane (± 3 ft [91.4 cm] in height) as visible from the core side of the shroud and 0.75 in. (1.91 cm) of adjacent base metal. See Figure 4-27.

TABLE 4-2: CE plants Primary items (continued)

Item	Applicability	Effect (Mechanism)	Expansion Link	Exam. Meth./ Freq.	Exam. Coverage
MRP-227 Revision 2 entries **C3. Core Shroud Assembly (Welded)** Shroud plates	Only plants with welded core shrouds assembled with full-height shroud plates	Cracking (IASCC) Aging management (IE)	C3.1. Remaining axial welds	Enhanced visual (EVT-1) examination no later than two refueling outages from the beginning of the license renewal period and subsequent examination at a 10-year interval.	Axial weld seams at the core shroud re-entrant corners, at the core mid-plane (± 3 ft [91.4 cm] in height) as visible from the core side of the shroud and 0.75 in. (1.91 cm) of adjacent base metal. See Figure 4-16.
MRP-227 Revision 1-A entries **C4. Core Shroud Assembly (Bolted)** Assembly	Bolted plant designs	Distortion (void swelling), including: • Abnormal interaction with fuel assemblies • Gaps along shroud plate joints • Relative vertical displacement of shroud plates Aging management (IE)	None	Visual (VT-3) examination no later than two refueling outages from the beginning of the license renewal period. Subsequent examinations at a 10-year interval.	Core side surfaces: • High fluence shroud plate joints • Top and bottom alignment of shroud plates • Bolts and locking devices See Figure 4-28.
MRP-227 Revision 1-A entries **C4. Core Shroud Assembly (Bolted)** Assembly	This component has been removed from MRP-227, Revision 2.				

TABLE 4-2: CE plants Primary items (continued)

Item	Applicability	Effect (Mechanism)	Expansion Link	Exam. Meth./ Freq.	Exam. Coverage
MRP-227 Revision 1-A entries **C4a. Core Shroud Assembly (Welded)** Assembly	Plant designs with core shrouds assembled in two vertical sections	Distortion (void swelling), as evidenced by measurable separation between the upper and lower core shroud segments Aging management (IE)	None	Visual (VT-1) examination no later than two refueling outages from the beginning of the license renewal period. Subsequent examinations at a 10-year interval.	100% of the horizontal seam between the upper and lower core shroud segments. (Note 3) See Figure 4-26.
MRP-227 Revision 2 entries **C4a. Core Shroud Assembly (Welded)** Assembly	Plant designs with core shrouds assembled in two vertical sections	Distortion (void swelling), as evidenced by measurable separation between the upper and lower core shroud segments Aging management (IE)	None	Visual (VT-1) examination no later than two refueling outages from the beginning of the license renewal period. Subsequent examinations at a 10-year interval.	100% of the horizontal seam between the upper and lower core shroud segments. (Note 3) See Figure 4-15.
MRP-227 Revision 1-A entries **C5. Core Support Barrel Assembly** Upper flange weld (UFW)	All plants	Cracking (SCC)	C5.2. Upper girth weld (UGW) C5.1. Lower girth/flange weld (LGW/LFW), C5.3. Upper axial welds (UAW) C5.4. Lower core support beams	Enhanced visual (EVT-1) examination no later than two refueling outages from the beginning of the license renewal period. Subsequent examinations at a 10-year interval.	100% of the accessible weld length of one side of the UFW and 0.75 in. (1.91 cm) of adjacent base metal shall be examined. (Note 4) See Figure 4-29.

TABLE 4-2: CE plants Primary items (continued)

Item	Applicability	Effect (Mechanism)	Expansion Link	Exam. Meth./ Freq.	Exam. Coverage
MRP-227 Revision 2 entries **C5. Core Support Barrel Assembly** Upper flange weld (UFW)	All plants	Cracking (SCC)	C5.2. Upper girth weld (UGW) C5.1. Lower girth/flange weld (LGW/LFW) C5.3. Upper axial welds (UAW) C5.4. Lower core support beams C5.5. CSB flexure weld (CSBFW)	Enhanced visual (EVT-1), volumetric (UT), or surface (ET) examination no later than two refueling outages from the beginning of the license renewal period. Subsequent examinations at a 10-year interval. (Note 4)	100% of the accessible weld length of one side of the UFW and 0.75 in. (1.91 cm) of adjacent base metal shall be examined. (Note 5) See Figure 4-17.
MRP-227 Revision 1-A entries **C6. Core Support Barrel Assembly** Middle girth weld (MGW)	All plants	Cracking (SCC, IASCC) Aging management (IE)	C6.1. Middle axial weld (MAW) C6.2. Lower axial weld (LAW) C6.3. Core support columns	Enhanced visual (EVT-1) examination no later than two refueling outages from the beginning of the license renewal period. Subsequent examinations at a 10-year interval.	100% of the accessible weld length of the OD of the MGW and 0.75 in. (1.91 cm) of adjacent base metal shall be examined. (Note 4) See Figure 4-29.

TABLE 4-2: CE plants Primary items (continued)

Item	Applicability	Effect (Mechanism)	Expansion Link	Exam. Meth./ Freq.	Exam. Coverage
MRP-227 Revision 2 entries **C6. Core Support Barrel Assembly** Middle girth weld (MGW)	All plants	Cracking (SCC, IASCC) Aging management (IE)	C6.1. Middle axial weld (MAW) C6.2. Lower axial weld (LAW) C6.3. Core support columns C6.4. Fuel alignment plate (SLR only)	Enhanced visual (EVT-1), volumetric (UT), or surface (ET) examination no later than two refueling outages from the beginning of the license renewal period. Subsequent examinations at a 10-year interval. (Note 4)	100% of the accessible weld length of the OD of the MGW and 0.75 in. (1.91 cm) of adjacent base metal shall be examined. (Note 6) See Figure 4-17.
MRP-227 Revision 1-A entries **C7. Core Support Barrel Assembly** CSB flexure weld (CSBFW)	All plants with welded core shrouds	Cracking (fatigue, SCC)	None	If screening for fatigue cannot be satisfied by plant-specific evaluation, perform enhanced visual (EVT-1) examination, no later than two refueling outages from the beginning of the license renewal period. Subsequent examination at a 10-year interval. If the CSB flexure weld screens out for fatigue, SCC must still be considered. This can be accomplished by performing an evaluation using plant-specific or bounding information, or by performing the inspection as prescribed above.	Examination coverage to be defined by evaluation to determine the potential location and extent of cracking. See Figure 4-30.

TABLE 4-2: CE plants Primary items (continued)

Item	Applicability	Effect (Mechanism)	Expansion Link	Exam. Meth./ Freq.	Exam. Coverage
MRP-227 Revision 2 entries **C7. Core Support Barrel Assembly** CSB flexure weld (CSBFW)	All plants with welded core shrouds	Cracking (fatigue)	None	If screening for fatigue cannot be satisfied by plant-specific evaluation, perform enhanced visual (EVT-1), volumetric (UT), or surface (ET) examination, no later than two refueling outages from the beginning of the license renewal period. Subsequent examination at a 10-year interval. (Note 4)	Examination coverage to be defined by evaluation to determine the potential location and extent of cracking. See Figure 4-18.
MRP-227 Revision 1-A entries **C9. Lower Support Structure** Core support plate	All plants with a core support plate	Cracking (fatigue) Aging management (IE)	None	If screening for fatigue cannot be satisfied by plant-specific evaluation, enhanced visual (EVT-1) examination, no later than two refueling outages from the beginning of the license renewal period. Subsequent examination at a 10-year interval.	Examination coverage to be defined by evaluation to determine the potential location and extent of fatigue cracking. See Figure 4-28.

TABLE 4-2: CE plants Primary items (continued)

Item	Applicability	Effect (Mechanism)	Expansion Link	Exam. Meth./ Freq.	Exam. Coverage
MRP-227 Revision 2 entries					
C9. Lower Support Structure Core support plate	All plants with a core support plate	Cracking (fatigue) Aging management (IE)	None	If screening for fatigue cannot be satisfied by plant-specific evaluation, enhanced visual (EVT-1) examination, no later than two refueling outages from the beginning of the license renewal period. Subsequent examination at a 10-year interval.	Examination coverage to be defined by evaluation to determine the potential location and extent of fatigue cracking. See Figure 4-22.
MRP-227 Revision 1-A entries					
C10. Upper Internals Assembly Fuel alignment plate	Only plants with welded core shrouds assembled with full-height shroud plates	Cracking (fatigue) Aging management (IE)	None	If screening for fatigue cannot be satisfied by plant-specific evaluation, enhanced visual (EVT-1) examination, no later than two refueling outages from the beginning of the license renewal period. Subsequent examination at a 10-year interval.	Examination coverage to be defined by evaluation to determine the potential location and extent of fatigue cracking. See Figure 4-31.

TABLE 4-2: CE plants Primary items (continued)

Item	Applicability	Effect (Mechanism)	Expansion Link	Exam. Meth./ Freq.	Exam. Coverage
MRP-227 Revision 2 entries					
C10. Upper Internals Assembly Fuel alignment plate	Only plants with welded core shrouds assembled with full-height shroud plates	Cracking (fatigue), Aging management (IE)	None	If screening for fatigue cannot be satisfied by plant-specific evaluation, enhanced visual (EVT-1) examination, no later than two refueling outages from the beginning of the license renewal period. Subsequent examination at a 10-year interval.	Examination coverage to be defined by evaluation to determine the potential location and extent of fatigue cracking. See Figure 4-19.
MRP-227 Revision 1-A entries					
C11. Control Element Assembly Instrument guide tubes	All plants with instrument guide tubes attached to the CEA shroud assemblies	Cracking (SCC, fatigue) that results in missing supports or separation at the welded joint between the tubes and supports	C11.1. Remaining instrument guide tubes within the CEA shroud assemblies	Visual (VT-3) examination, no later than two refueling outages from the beginning of the license renewal period. Subsequent examination at a 10-year interval.	100% of instrument guide tubes in peripheral CEA shroud assemblies (that is, those adjacent to the perimeter of the fuel alignment plate), focusing on the supports and the connecting welds between the supports and the guide tube and CEA shroud. See Figure 4-32.

TABLE 4-2: CE plants Primary items (continued)

Item	Applicability	Effect (Mechanism)	Expansion Link	Exam. Meth./ Freq.	Exam. Coverage
MRP-227 Revision 2 entries **C11. Control Element Assembly** Instrument guide tubes and supports	All plants with instrument guide tubes attached to the CEA shroud assemblies	Cracking (SCC, fatigue) that results in missing supports or separation at the welded joint between the tubes and supports	C11.1. Remaining instrument guide tubes and supports within the CEA shroud assemblies	Visual (VT-3) examination, no later two refueling outages from the beginning of the license renewal period. Subsequent examination at a 10-year interval.	100% of instrument guide tubes in peripheral CEA shroud assemblies (that is, those adjacent to the perimeter of the fuel alignment plate), focusing on the supports and the connecting welds between the supports and the guide tube and CEA shroud. See Figure 4-20.
MRP-227 Revision 1-A entries **C12. Lower Support Structure** Deep beams	Only plants with welded core shrouds assembled with full-height shroud plates	Cracking (fatigue) that results in a detectable surface-breaking indication in the welds or beams. Aging management (IE)	Remaining deep beams	Enhanced visual (EVT-1) examination, no later than two refueling outages from the beginning of the license renewal period. Subsequent examination at a 10-year interval, if adequacy of remaining fatigue life cannot be demonstrated.	Examine 25% of the total number of beam-to-beam welds. Coverage on each weld includes the top four inches of the weld in the vertical orientation and 0.75 in. (1.91 cm) of adjacent base metal. The inspection coverage must be evenly distributed across the deep beam structure. (Notes 5, 6, and 7) See Figure 4-33.

TABLE 4-2: CE plants Primary items (continued)

Item	Applicability	Effect (Mechanism)	Expansion Link	Exam. Meth./ Freq.	Exam. Coverage
MRP-227 Revision 2 entries **C12. Lower Support Structure** Deep beams	Only plants with welded core shrouds assembled with full-height shroud plates	Cracking (SCC, IASCC, fatigue) that results in a detectable surface-breaking indication in the welds or beams. Aging management (IE)	Remaining deep beams	Enhanced visual (EVT-1) examination, no later than two refueling outages from the beginning of the license renewal period. Subsequent examination at a 10-year interval, if adequacy of remaining fatigue life cannot be demonstrated.	Examine 25% of the total number of beam-to-beam welds. Coverage on each weld includes the top 4 inches of the weld in the vertical orientation and 0.75 in. (1.91 cm) of adjacent base metal. The inspection coverage must be evenly distributed across the deep beam structure. (Notes 7, 8, and 9) See Figure 4-21.
MRP-227 Revision 2 entries **C18. Core Shroud Assembly (Welded)** Core shroud tie rods and nuts (NOTE: This is a new Primary component added in Revision 2)	All plants with core shroud tie rods	Loss of material (wear) Aging management (ISR/IC)	None	Non-qualified visual inspection (see Section 4.2.3) no later than two refueling outages from the beginning of the first license renewal period. Subsequent inspections during every refueling outage.	Examination of the top end of 100% of the core shroud tie rods. Top-down and side views of each tie rod must be obtained. See Figure 4-24.

TABLE 4-2: CE plants Primary items (continued)

Item	Applicability	Effect (Mechanism)	Expansion Link	Exam. Meth./ Freq.	Exam. Coverage
MRP-227 Revision 2 entries					
C19. CEA Shroud Assemblies CEA shroud bolts (NOTE: This is a new Primary component added in Revision 2)	All plants with CEA shroud bolts	Cracking (IASCC, fatigue) Aging management (IE)	None	If screening for IASCC cannot be satisfied by plant-specific evaluation, volumetric (UT) examination within two refueling outages of subsequent license renewal. The plant-specific analysis must also demonstrate that wear and fatigue are either adequately managed or that the plant falls below screening thresholds. Subsequent examinations are at a 10-year interval.	100% of accessible CEA shroud bolts (Note 10) See Figure 4-25.

TABLE 4-2: CE plants Primary items (continued)

MRP-227 Revision 1-A entries

Notes:

1. Examination acceptance criteria and expansion criteria for the CE components are in Table 5-2.
2. A minimum of 75% of the total core shroud bolts population (examined + unexamined), including coverage consistent with the Expansion criteria in Table 5-2, must be examined for inspection credit.
3. If evidence of distortion is detected by visual exam, consideration should be given to making supplementary measurements (minimum of 3 to 5, depending on extent of observed condition) of gap opening between the upper and lower core shroud segments.
4. Examination coverage requires a minimum of 75% of the length of either the ID or the OD of the weld being examined.
5. The stated coverage requirement is the minimum if no significant indications are found. However, the Examination acceptance criteria in Section 5 require that additional coverage must be achieved in the same outage if significant flaws are found. This contingency should be considered for inspection planning purposes.
6. Inspections subsequent to the first 25% sampling inspection must cover weld length that was not inspected during previous examinations. A minimum of 20% out of the 25% inspection coverage of each subsequent inspection must include previously u-inspected weld length as possible within the limitation of the remaining accessible uninspected weld.
7. Justification that adequate distribution of the inspection coverage has been achieved can be based on geometric or layout arguments. For example, because each rectangular axial compartment in the structure has four welds around it, which are shared with the adjacent compartments on two sides, the inspection coverage could consist of the selection of one weld from every second compartment in the structure.

MRP-227 Revision 2 entries

Notes:

1. The examination requirements detailed in this table may be replaced or modified by a plant implementing an alternate aging management strategy that addresses the aging degradation mechanisms within these guidelines, supported by a plant-specific technical justification. This may be necessary in cases such as bolt replacements or component modification. See Appendix C for additional details on performing such evaluations.
2. Examination acceptance criteria and expansion criteria for the CE components are in Table 5-2.
3. If evidence of distortion is detected by visual exam, consideration should be given to making supplementary measurements (minimum of 3 to 5, depending on extent of observed condition) of gap opening between the upper and lower core shroud segments.
4. UT or ET examination of core barrel welds must be supported by a technical justification developed per MRP-228 [3].
5. Examination coverage requires a minimum of 75% of the length of either the ID or the OD of the weld being examined.
6. Examination coverage requires a minimum of 75% of the length of OD of the weld being examined.
7. The stated coverage requirement is the minimum if no significant indications are found. However, the Examination acceptance criteria in Section 5 require that additional coverage must be achieved in the same outage if significant flaws are found. This contingency should be considered for inspection planning purposes.
8. Inspections subsequent to the first 25% sampling inspection must cover weld length that was not inspected during previous examinations. A minimum of 20% out of the 25% inspection coverage of each subsequent inspection must include previously uninspected weld length as possible within the limitation of the remaining accessible uninspected weld.
9. Justification that adequate distribution of the inspection coverage has been achieved can be based on geometric or layout arguments. For example, because each rectangular axial compartment in the structure has four welds around it, which are shared with the adjacent compartments on two sides, the inspection coverage could consist of the selection of one weld from every second compartment in the structure.
10. A minimum of 75% of the total CEA shroud bolts population (examined + unexamined) must be examined for inspection credit.
11. The entries in this table are applicable to CE-designed plants operating 40 to 80 years.

TABLE 4-3: Westinghouse plants Primary items

Item	Applicability	Effect (Mechanism)	Expansion Link	Exam. Meth./ Freq.	Exam. Coverage
MRP-227 Revision 1-A entries **W1. Control Rod Guide Tube Assembly** Guide plates (cards)	All plants (see WEC NSAL-17-1)	Loss of material (wear)	None	Per the requirements of WCAP-17451-P, including subsequent examinations (Note 5).	Examination coverage per the requirements of WCAP-17451-P, Revision 1 (Note 5) See Figure 4-11
MRP-227 Revision 1-A entries **W1. Control Rod Guide Tube Assembly** Guide plates (cards)	This component has been moved to the Existing Programs components table (Table 4-9).				
MRP-227 Revision 1-A entries **W2. Control Rod Guide Tube Assembly** Lower flange welds	All plants	Cracking (SCC, fatigue) Aging management (IE and TE)	W2.1. Remaining CRGT assembly lower flange welds W2.2. BMI column bodies	Enhanced visual (EVT-1) examination to determine the presence of cracklike surface flaws in flange welds no later than two refueling outages from the beginning of the license renewal period and subsequent examination at a 10-year interval.	100% of outer (accessible) CRGT lower flange weld surfaces and 0.25 in. (0.64 cm) of the adjacent base metal on the individual periphery CRGT assemblies. (Note 2) See Figure 4-12.

TABLE 4-3: Westinghouse plants Primary items (continued)

Item	Applicability	Effect Mechanism)	Expansion Link	Exam. Meth./ Freq.	Exam. Coverage
MRP-227 Revision 2 entries **W2. Control Rod Guide Tube Assembly** Lower flange welds	All plants	Cracking (SCC, IASCC, fatigue) Aging management (IE and TE)	W2.1. Remaining CRGT assembly lower flange welds W2.2. BMI column bodies	Enhanced visual (EVT-1) examination to determine the presence of cracklike surface flaws in flange welds no later than two refueling outages from the beginning of the license renewal period and subsequent examination at a 10-year interval.	100% of outer (accessible) CRGT lower flange weld surfaces and 0.25 in. (0.64 cm) of the adjacent base metal on the individual periphery CRGT assemblies. (Note 3) See Figure 4-31.
MRP-227 Revision 1-A entries **W3. Core Barrel Assembly** Upper flange Weld (UFW)	All plants	Cracking (SCC)	W3.1. Upper girth weld (UGW) W3.3. Lower flange weld (LFW) W3.2. Upper axial welds (UAW) W3.4. Lower support forging or casting	Enhanced visual (EVT-1) examination, no later than two refueling outages from the beginning of the license renewal period and subsequent examination at a 10-year interval.	100% of the accessible weld length of one side of the UFW and 0.75 in. (1.91 cm) of adjacent base metal shall be examined. (Note 6) See Figure 4-13.

TABLE 4-3: Westinghouse plants Primary items (continued)

Item	Applicability	Effect Mechanism)	Expansion Link	Exam. Meth./ Freq.	Exam. Coverage
MRP-227 Revision 2 entries **W3. Core Barrel Assembly** Upper flange weld (UFW)	All plants	Cracking (SCC)	W3.1. Upper girth weld (UGW), W3.3. Lower flange weld (LFW), W3.2. Upper axial welds (UAW) (secondary expansion of W3.1. UGW or W3.3. LFW), and W3.4. Lower support forging or casting (secondary expansion of W3.3. LFW)	Enhanced visual (EVT-1), volumetric (UT), or surface (ET) examination, no later than two refueling outages from the beginning of the license renewal period and subsequent examination at a 10-year interval. (Note 4)	100% of the accessible weld length of one side of the UFW and 0.75 in. (1.91 cm) of adjacent base metal shall be examined. (Note 5) See Figure 4-32.
MRP-227 Revision 1-A entries **W4. Core Barrel Assembly** Lower girth weld (LGW)	All plants	Cracking (SCC, IASCC) Aging management (IE)	W4.1. Upper core plate, W4.4. Lower support column bodies (cast, non-cast), W4.2. Middle axial welds (MAW), W4.3. Lower axial welds (LAW)	Enhanced visual (EVT-1) examination, no later than two refueling outages from the beginning of the license renewal period and subsequent examination at a 10-year interval.	100% of the accessible weld length of the OD of the LGW and 0.75 in. (1.91 cm) of adjacent base metal shall be examined. (Note 6) See Figure 4-13.

TABLE 4-3: Westinghouse plants Primary items (continued)

Item	Applicability	Effect Mechanism)	Expansion Link	Exam. Meth./ Freq.	Exam. Coverage
MRP-227 Revision 2 entries **W4. Core Barrel Assembly** Lower girth weld (LGW)	All plants	Cracking (SCC, IASCC) Aging management (IE)	W4.1. Upper core plate W4.4. Lower support column bodies (cast, non-cast) W4.2. Middle axial welds (MAW) W4.3. Lower axial welds (LAW)	Enhanced visual (EVT-1), volumetric (UT), or surface (ET) examination, no later than two refueling outages from the beginning of the license renewal period and subsequent examination at a 10-year interval. (Note 4)	100% of the accessible weld length of the OD of the LGW and 0.75 in. (1.91 cm) of adjacent base metal shall be examined. Accessibility may be limited by the thermal shield or neutron pads, but removal of the thermal shield or neutron pads is not required. (Note 6) See Figure 4-32.
MRP-227 Revision 1-A entries **W5. Baffle-Former Assembly** Baffle-edge bolts	All plants with baffle-edge bolts	Cracking (IASCC, fatigue) that results in • Lost or broken locking devices • Failed or missing bolts • Protrusion of bolt heads Aging management (IE and ISR) (Note 4)	None	Visual (VT-3) examination, with baseline examination between 20 and 40 EFPY and subsequent examinations at a 10-year interval.	Bolts and locking devices on high fluence seams. 100% of components accessible from core side. See Figure 4-14.

TABLE 4-3: Westinghouse plants Primary items (continued)

Item	Applicability	Effect Mechanism)	Expansion Link	Exam. Meth./ Freq.	Exam. Coverage
MRP-227 Revision 2 entries					
W5. Baffle-Former Assembly Baffle-edge bolts	All plants with baffle-edge bolts	Cracking (IASCC, fatigue) that results in • Lost or broken locking devices • Failed or missing bolts • Protrusion of bolt heads Aging management (IE and ISR) (Note 7)	None	Visual (VT-3) examination, with baseline examination no later than 40 EFPY and subsequent examinations at a 10-year interval.	Bolts and locking devices on high fluence seams. 100% of components accessible from core side. See Figure 4-33.
MRP-227 Revision 1-A entries					
W6. Baffle-Former Assembly Baffle-former bolts (Note 7)	All plants	Cracking (IASCC, fatigue) Aging management (IE and ISR) (Note 4)	W6.2. Lower support column bolts W6.1. Barrel-former bolts	Baseline volumetric (UT) examination interval is dependent on the plant design (Note 8). Subsequent examination is dependent on the plant design and the results of the baseline inspection (Note 9).	100% of accessible bolts. (Note 3) See Figure 4-15.

TABLE 4-3: Westinghouse plants Primary items (continued)

Item	Applicability	Effect Mechanism)	Expansion Link	Exam. Meth./ Freq.	Exam. Coverage
MRP-227 Revision 2 entries **W6a. Baffle-Former Assembly** Baffle-former bolts (Tier 1) (Note 8)	Tier 1 plants (4-loop downflow) [47]	Cracking (IASCC, fatigue) Aging management (IE and ISR) (Note 7)	W6.2. Lower support column bolts, W6.1. Barrel-former bolts (secondary expansion of W6.2. Lower support column bolts if large clusters of degraded baffle-former bolts are not detected; see Table 4-6)	Baseline volumetric (UT) examinations have been completed at all of these plants. Subsequent examination is dependent on the plant design and the results of the baseline inspection. (Note 9)	100% of accessible bolts. (Note 10) See Figure 4-34.
MRP-227 Revision 2 entries **W6b. Baffle-Former Assembly** Baffle-former bolts (Tier 2) (Note 8)	Tier 2 plants (2-loop and 3-loop downflow plants) [47]	Cracking (IASCC, fatigue) Aging management (IE and ISR) (Note 7)	W6.2. Lower support column bolts, W6.1. Barrel-former bolts (secondary expansion of W6.2. Lower support column bolts if large clusters of degraded baffle-former bolts are not detected, see Table 4-6)	Baseline volumetric (UT) examination no later than 30 EFPY. Subsequent examination is dependent on the plant design and the results of the baseline inspection. (Note 9)	100% of accessible bolts. (Note 10) See Figure 4-34.

TABLE 4-3: Westinghouse plants Primary items (continued)

Item	Applicability	Effect Mechanism)	Expansion Link	Exam. Meth./ Freq.	Exam. Coverage
MRP-227 Revision 2 entries					
W6c. Baffle-Former Assembly Baffle-former bolts (Tier 3 and 4) (Note 8)	Tier 3 plants (converted upflow plants) (Note 11) Tier 4 plants (design upflow plants) [47]	Cracking (IASCC, fatigue) Aging management (IE and ISR) (Note 7)	W6.2. Lower support column bolts, W6.1. Barrel-former bolts (secondary expansion of W6.2. Lower support column bolts if large clusters of degraded baffle-former bolts are not detected, see Table 4-6)	Baseline volumetric (UT) examination no later than 35 EFPY. Subsequent examination is dependent on the plant design and the results of the baseline inspection. (Note 9)	100% of accessible bolts. (Note 10) See Figure 4-34.
MRP-227 Revision 1-A entries					
W7. Baffle-Former Assembly Assembly (Includes baffle plates, baffle edge bolts, corner bolts, and indirect effects of void swelling in former plates)	All plants	Distortion (void swelling), or cracking (IASCC) that results in • Abnormal interaction with fuel assemblies • Gaps between plates • Vertical displacement of baffle plates • Broken or damaged edge bolts	None	Visual (VT-3) examination to check for evidence of distortion, with baseline examination between 20 and 40 EFPY and subsequent examinations at a 10-year interval.	Core side surface: • High fluence baffle joints • Top and bottom edge of baffle plates • Bolts and locking devices See Figure 4-16.

TABLE 4-3: Westinghouse plants Primary items (continued)

Item	Applicability	Effect Mechanism)	Expansion Link	Exam. Meth./ Freq.	Exam. Coverage
MRP-227 Revision 2 entries					
W7. Baffle-Former Assembly Assembly (Includes baffle plates, bracket bolts (if applicable), corner bolts (if applicable), and indirect effects of void swelling in former plates)	All plants	Distortion (void swelling), or cracking (IASCC) that results in • Abnormal interaction with fuel assemblies • Gaps between plates • Vertical displacement of baffle plates • Broken or damaged bolts	None	Visual (VT-3) examination to check for evidence of distortion, with baseline examination no later than 40 EFPY and subsequent examinations at a 10-year interval.	Core side surface: • High fluence baffle joints • Top and bottom edge of baffle plates • Bolts and locking devices See Figure 4-35.
MRP-227 Revision 1-A entries					
W8. Alignment and Interfacing Components Internals hold-down spring	All plants with 304 stainless steel hold-down springs	Distortion (loss of load due to stress relaxation)	None	Direct measurement of spring height within three cycles of the beginning of (before or after) the license renewal period. If the first set of measurements is not sufficient to assess remaining life, additional spring height measurements will be required.	Measurements should be taken at several points around the circumference of the spring, with a statistically adequate number of measurements at each point to minimize uncertainty. See Figure 4-17.

TABLE 4-3: Westinghouse plants Primary items (continued)

Item	Applicability	Effect Mechanism)	Expansion Link	Exam. Meth./ Freq.	Exam. Coverage
MRP-227 Revision 2 entries					
W8. Alignment and Interfacing Components Internals hold-down spring	All plants with Type 304 stainless steel hold-down springs	Distortion (loss of load due to stress relaxation)	None	Direct measurement of spring height within three cycles of the beginning of (before or after) the license renewal period. If the first set of measurements is not sufficient to assess remaining life to the end of licensed plant life (whether to the end of the first period of extended operation or the end of SLR), additional spring height measurements will be required.	Measurements should be taken at several points around the circumference of the spring, with a statistically adequate number of measurements at each point to minimize uncertainty. See Figure 4-36.
MRP-227 Revision 1-A entries					
W9. Thermal Shield Assembly Thermal shield flexures	All plants with thermal shields (see WEC TB-19-5)	Cracking (fatigue) or loss of material (wear) that results in thermal shield flexures excessive wear, fracture, or complete separation	None	Visual (VT-3) no later than two refueling outages from the beginning of the license renewal period. Subsequent examinations at a 10-year interval.	100% of accessible surfaces of 100% of thermal shield flexures. (Note 10) See Figure 4-18.

TABLE 4-3: Westinghouse plants Primary items (continued)

Item	Applicability	Effect Mechanism)	Expansion Link	Exam. Meth./ Freq.	Exam. Coverage
MRP-227 Revision 2 entries **W9. Thermal Shield Assembly** Thermal shield flexures	All plants with thermal shields (see WEC TB-19-5 [50])	Cracking (SCC, fatigue) that results in thermal shield flexure fracture, or complete separation	None	Visual (VT-3) no later than two refueling outages from the beginning of the license renewal period. Subsequent examinations at a 10-year interval.	100% of accessible surfaces of 100% of thermal shield flexures. Minimum coverage shall include the top and bottom accessible surfaces of the inner flexure weld (closest to the attachment to the core barrel) and the outer surface of the thermal shield to flexure weld, including the transition radii of this weld. See Figure 4-37.

TABLE 4-3: Westinghouse plants Primary items (continued)

MRP-227 Revision 1-A entries

Notes:

1. Examination acceptance criteria and expansion criteria for the Westinghouse components are in Table 5-3.
2. A minimum of 75% of the total identified sample population must be examined.
3. A minimum of 75% of the total bolt population (examined + unexamined), including coverage consistent with the Expansion criteria in Table 5-3, must be examined for inspection credit.
4. Void swelling effects on this component are managed through management of void swelling on the entire baffle-former assembly.
5. In WCAP-17451-P the baseline examination schedule has been adjusted for various CRGT designs, the extent of individual CRGT examination modified, and flexible subsequent examination regimens correlating to initial baseline sample size, accuracy of wear estimation, and examination results. Initial inspection prior to the license renewal period may be required. Use WCAP-17451-P [37], Revision 1, including the modified requirements due to the interim guidance provided in EPRI letter MRP 2018-007 dated 3/7/2018 [47] and PWROG letter OG-18-46 dated 2/20/2018 [38].
6. Examination coverage requires a minimum of 50% of the length of either the ID or the OD of the weld being examined.
7. Baffle-former bolt inspection includes inspection of the corner plate bolts when applicable.
8. In accordance with MRP 2017-009 [39] and MRP 2017-010 [41], Tier 1 plants are to perform the baseline UT examination by 20 EFPY or during the next refueling outage after March 1, 2016. Per MRP 2017-009 [39], Tier 2 plants are to perform the baseline UT examination at no later than 30 EFPY (initial Tier 2 plant baseline UT exams performed prior to 1/1/2018 are acceptable). All other remaining plants are to perform the baseline UT examination at no later than 35 EFPY.
9. Reexamination periods shall be determined by plant-specific evaluation per the MRP-227 Needed Requirement 7.5 as documented and dispositioned in the owner's plant corrective action program. If atypical or aggressive baffle-former bolt degradation, as defined in MRP 2017-009 [39] (that is, ≥3% of baffle-former bolts with UT or visual indications or clustering* for downflow plants and ≥5% of baffle-former bolts with UT or visual indications or clustering* for upflow plants), is observed, the interim guidance (MRP 2016-021 [40] and MRP 2017-009 [39]) provides limitations to the permitted reinspection interval (not to exceed 6 years maximum) unless further evaluation is performed to justify a longer interval (see Applicant/Licensee Action Item 1 in the NRC SE for evaluation submittal requirements [35]). If evaluation justifies a longer reinspection interval, it is not permitted to exceed 10 years.
   *"Clustering" is defined per NSAL-16-1 Rev. 1 [42] as three or more adjacent defective baffle-former bolts or more than 40% defective baffle-former bolts on the same baffle plate. Untestable bolts should be reviewed on a plant-specific basis consistent with WCAP-17096-NP-A for determination whether these should be considered when evaluating clustering.
10. See Westinghouse Technical Bulletin TB-19-5 dated 10/9/2019 and MRP 2019-017 dated 5/31/2019 for additional details on inspection recommendations.

TABLE 4-3: Westinghouse plants Primary items (continued)

MRP-227 Revision 2 entries

Notes:

1. The examination requirements detailed in this table may be replaced or modified by a plant implementing an alternate aging management strategy, that addresses the aging degradation mechanisms within these guidelines, supported by a plant-specific technical justification. This may be necessary in cases such as bolt replacements or component modification. See Appendix C for additional details on performing such evaluations.
2. Examination acceptance criteria and expansion criteria for the Westinghouse components are in Table 5-3.
3. A minimum of 75% of the total identified sample population must be examined.
4. UT or ET examination of core barrel welds must be supported by a technical justification developed per MRP-228 [3].
5. Examination coverage requires a minimum of 75% of the length of either the ID or the OD of the weld being examined.
6. Examination coverage requires a minimum of 50% of the length of the weld being examined.
7. Void swelling effects on this component are managed through management of void swelling on the entire baffle-former assembly.
8. Baffle-former bolt inspection includes inspection of the corner plate bolts when applicable.
9. Reexamination periods shall be determined by plant-specific evaluation as documented and dispositioned in the owner's plant corrective action program. If evaluation justifies a longer reinspection interval, it is not permitted to exceed 10 years.
10. A minimum of 75% of the total bolt population (examined + unexamined), including coverage consistent with the Expansion criteria in Table 5-3, must be examined for inspection credit.
11. Plants that operated in a downflow configuration for more than 20 calendar years prior to upflow conversion must follow the initial inspection guidance for the applicable downflow tier—Tier 1 for 4-loop plants or Tier 2 for 2-loop or 3-loop plants.
12. The entries in this table are applicable to Westinghouse-designed plants operating 40 to 80 years.

TABLE 4-4: B&W plants Expansion items

Item	Applicability	Effect (Mechanism)	Primary Link	Exam. Meth./ Freq.	Exam. Coverage
Existing MRP-227-A entries **Upper Grid Assembly** Alloy X-750 dowel-to-upper grid fuel assembly support pad welds	All plants (except DB)	Cracking (SCC), including the detection of separated or missing locking welds, or missing dowels	Alloy X-750 dowel-to-guide block welds	Visual (VT-3) examination. Subsequent examinations on the 10-year ISI interval unless an applicant/licensee provides an evaluation for NRC staff approval that justifies a longer interval between inspections.	Accessible surfaces of 100% of the dowel locking welds. See Figure 4-6 (that is, these are similar to the lower grid fuel assembly support pads).
MRP-227 Revision 1 entries **B13.1. Upper Grid Assembly** Alloy X-750 dowel-to-upper grid fuel assembly support pad welds	All plants (Note 2)	Cracking (SCC), including the detection of separated or missing locking welds, or missing dowels	B13. Alloy X-750 dowel-to-guide block welds	Visual (VT-3) examination. Subsequent examination during each 10-year interval unless an applicant/licensee provides an evaluation for NRC staff approval that justifies a longer interval between inspections.	Accessible surfaces of 100% of the support pad dowel locking welds. See Figure 4-6. (These are similar to the lower grid fuel assembly support pads)
MRP-227 Revision 1-A entries **B13.1. Upper Grid Assembly** Alloy X-750 dowel-to-upper grid fuel assembly support pad welds	Entry remained unchanged within MRP-227 Revision 1-A.				

TABLE 4-4: B&W plants Expansion items (continued)

Item	Applicability	Effect (Mechanism)	Primary Link	Exam. Meth./ Freq.	Exam. Coverage
MRP-227 Revision 2 entries **Upper Grid Assembly** B13.1. Alloy X-750 dowels-to-upper grid fuel assembly support pad welds	All plants 40 < years ≤ 80	NO CHANGE	B13. Alloy X-750 dowel-to-guide block weld (except DB) B21. Alloy X-750 dowels-to-lower grid fuel assembly support pad welds (DB only)	NO CHANGE	Accessible surfaces of 100% of the support pad dowel locking welds. See Figure 4-14.
Existing MRP-227-A entries No entry exists in MRP-227-A for this item **Vent Valve Assembly** Vent valve bodies	-	-	-	-	-

TABLE 4-4: B&W plants Expansion items (continued)

Item	Applicability	Effect (Mechanism)	Primary Link	Exam. Meth./ Freq.	Exam. Coverage
MRP-227 Revision 1 entries **B2.1. Vent Valve Assembly** Vent valve bodies	All plants	Cracking (TE), including the detection of fractured vent valve bodies, surface irregularities (damaged, grossly cracked, or missing portions) of the vent valve bodies, as a result of damage to the jackscrews or locking devices (Note 3)	B2. CRGT spacer castings	Visual (VT-3) examination. Subsequent examination during each 10-year interval unless an applicant/licensee provides an evaluation for NRC staff approval that justifies a longer interval between inspections.	Accessible surfaces of 100% of the vent valve bodies on the plenum side (core side) of the vent valve. (Limited accessibility) See Figures 4-9 and 4-10. (Note 4)
MRP-227 Revision 1-A entries **B2.1. Vent Valve Assembly** Vent valve bodies (Note 9)	NO CHANGE	NO CHANGE	NO CHANGE	NO CHANGE	NO CHANGE
MRP-227 Revision 2 entries This item has been removed from MRP-227.	This item has been removed from MRP-227.				

TABLE 4-4: B&W plants Expansion items (continued)

Item	Applicability	Effect (Mechanism)	Primary Link	Exam. Meth./ Freq.	Exam. Coverage
Existing MRP-227-A entries					
Core Barrel Assembly Upper thermal shield (UTS) bolts and their locking devices	All plants	Bolt or stud/nut: cracking (SCC) Locking devices: loss of material; damaged, distorted, or missing locking devices (wear or fatigue damage by failed bolts).	UCB, LCB, or FD bolts and their locking devices	Bolt or stud/nut: volumetric examination (UT). Locking devices: visual (VT-3) examination Subsequent examinations at the 10-year ISI interval unless an applicant/licensee provides an evaluation for NRC staff approval that justifies a longer interval between inspections.	100% of accessible bolts or studs/nuts and their locking devices (Note 2). See Figure 4-7.
Core Barrel Assembly Surveillance specimen holder tube (SSHT) studs/nuts (CR-3) or bolts (DB) and their locking devices	CR-3, DB				
MRP-227 Revision 1 entries					
B7.1. Core Barrel Assembly Upper thermal shield bolts (UTS) and their locking devices	All plants	Bolts: cracking (SCC—UTS and SSHT bolts, IC/ISR/wear/fatigue–SSHT bolts) (Note 7) Locking devices: loss of material, damaged, distorted or missing locking devices (wear or fatigue damage by failed bolts)	B7, B8, B12, UCB, LCB, or FD bolts and their locking devices B14. Shock pad bolts and their locking devices (TMI-1 only)	Bolts: volumetric (UT) examination. Locking devices: visual (VT-3) examination. Subsequent examination during each 10-year interval unless an applicant/licensee provides an evaluation for NRC staff approval that justifies a longer interval between inspections.	100% of accessible bolts and their locking devices. (Note 5) See Figure 4-7 (for UTS bolts) and Figure 4-8(b) (for SSHT bolts).
B7.2. Core Barrel Assembly Surveillance specimen holder tube (SSHT) bolts and their locking devices	DB				

TABLE 4-4: B&W plants Expansion items (continued)

Item	Applicability	Effect (Mechanism)	Primary Link	Exam. Meth./ Freq.	Exam. Coverage
MRP-227 Revision 1-A entries **B7.1. Core Barrel Assembly** Upper thermal shield (UTS) bolts and their locking devices	NO CHANGE	NO CHANGE	B7. UCB, B8. LCB, or B12. FD bolts and their locking devices B14. Shock pad bolts and their locking devices (TMI-1 only)	NO CHANGE	NO CHANGE
B7.2. Core Barrel Assembly Surveillance specimen holder tube (SSHT) bolts and their locking devices	NO CHANGE				
MRP-227 Revision 2 entries **Core Barrel Assembly** B7.1. Upper thermal shield (UTS) bolts	All plants 40 < years ≤ 80	Bolts: cracking (SCC)	B7. UCB, B8. LCB, or B12. FD bolts	Bolts: volumetric (UT) examination. Subsequent examination during each 10-year ISI interval unless an applicant/licensee provides an evaluation for NRC staff approval that justifies a longer interval between inspections.	100% of accessible bolts. (Note 7) See Figure 4-7.

TABLE 4-4: B&W plants Expansion items (continued)

Item	Applicability	Effect (Mechanism)	Primary Link	Exam. Meth./ Freq.	Exam. Coverage
MRP-227 Revision 2 entries **Core Barrel Assembly** B7.2. Surveillance specimen holder tube (SSHT) bolts	DB 40 < years ≤ 60	Bolts: cracking (SCC, ISR/IC/fatigue/ wear) (Notes 8, 12)	B7. UCB, B8. LCB, or B12. FD bolts	Bolts: volumetric (UT) examination. Subsequent examination during each 10-year ISI interval unless an applicant/licensee provides an evaluation for NRC staff approval that justifies a longer interval between inspections.	100% of accessible bolts. (Note 7) See Figure 4-8(c).
Existing MRP-227-A entries **Core Barrel Assembly** Core barrel cylinder (including vertical and circumferential seam welds) Former plates	All plants	Cracking (IE), including readily detectable cracking	Baffle plates	No examination requirements. Justify by evaluation or by replacement.	Inaccessible. See Figure 4-2.
MRP-227 Revision 1 entries **Core Barrel Assembly** B10.1. Core barrel cylinder (including vertical and center circumferential seam welds) B10.2. Former plates	All plants	Cracking (IE) (Note 3)	B10.Baffle plates	No examination requirements. Justify by evaluation or by replacement.	Inaccessible. See Figure 4-2.

TABLE 4-4: B&W plants Expansion items (continued)

Item	Applicability	Effect (Mechanism)	Primary Link	Exam. Meth./ Freq.	Exam. Coverage
MRP-227 Revision 1-A entries B10.1. Core barrel cylinder (including vertical and center circumferential seam welds) B10.2. Former plates	Entry remained unchanged within MRP-227 Revision 1-A.				
MRP-227 Revision 2 entries **Core Barrel Assembly** B10.2. Former plates	All plants 60 < years ≤ 80	Cracking (IE, VS)	NO CHANGE	NO CHANGE	NO CHANGE
Existing MRP-227-A entries **Core Barrel Assembly** Baffle-to-baffle bolts Core barrel-to-former bolts	All plants	Cracking (IASCC, IE, overload) (Note 3)	Baffle-to-former bolts	Internal baffle-to-baffle bolts: no examination requirements, Justify by evaluation or by replacement.	An acceptable examination technique currently not available. See Figure 4-2.
				External baffle-to-baffle bolts, core barrel-to-former bolts: no examination requirements. Justify by evaluation or by replacement.	Inaccessible. See Figure 4-2.

TABLE 4-4: B&W plants Expansion items (continued)

Item	Applicability	Effect (Mechanism)	Primary Link	Exam. Meth./ Freq.	Exam. Coverage
MRP-227 Revision 1 entries **Core Barrel Assembly** B9.1. Baffle-to-baffle bolts B9.2. Core barrel-to-former bolts	All plants	Cracking (IASCC, IE, IC/ISR/fatigue/wear, overload) (Notes 3, 6, 8)	B9. Baffle-to-former bolts	Internal baffle-to-baffle bolts: no examination requirements. Justify by evaluation or by replacement.	An acceptable examination technique currently not available. See Figure 4-2.
				External baffle-to-baffle bolts, core barrel-to-former bolts: no examination requirements. Justify by evaluation or by replacement.	Inaccessible. See Figure 4-2.
MRP-227 Revision 1-A entries B9.1. Baffle-to-baffle bolts B9.2. Core barrel-to-former bolts	Entry remained unchanged within MRP-227 Revision 1-A.				
MRP-227 Revision 2 entries **Core Barrel Assembly** B9.1. Baffle-to-baffle bolts B9.2. Core barrel-to-former bolts	All plants 40 < years ≤ 60	Cracking (IASCC, IE, ISR/IC/fatigue/wear, overload) (Notes 8, 9)	NO CHANGE	NO CHANGE	NO CHANGE

TABLE 4-4: B&W plants Expansion items (continued)

Item	Applicability	Effect (Mechanism)	Primary Link	Exam. Meth./ Freq.	Exam. Coverage
MRP-227 Revision 2 entries **Core Barrel Assembly** B9.1. Baffle-to-baffle bolts B9.2. Core barrel-to-former bolts	All plants 60 < years ≤ 80	Cracking (IASCC, IE, ISR/IC/fatigue/wear, VS, overload) (Notes 8, 10)	NO CHANGE	NO CHANGE	NO CHANGE
Existing MRP-227-A entries **Core Barrel Assembly** Locking devices, includinglocking welds, for the external baffle-to-baffle bolts and core barrel-to-former bolts	All plants	Cracking (IASCC, IE)	Locking devices, including locking welds, of baffle-to-former bolts or internal baffle-to-baffle bolts	No examination requirements. Justify by evaluation or by replacement.	Inaccessible. See Figure 4-2.
MRP-227 Revision 1 entries **Core Barrel Assembly** B11.1.Locking devices, including locking welds, of the external baffle-to-baffle bolts and core barrel-to-former bolts	All plants	Cracking (IE)	B11. Locking devices, including locking welds, of baffle-to-former bolts and internal baffle-to-baffle bolts	No examination requirements. Justify by evaluation or by replacement.	Inaccessible. See Figure 4-2.

TABLE 4-4: B&W plants Expansion items (continued)

Item	Applicability	Effect (Mechanism)	Primary Link	Exam. Meth./ Freq.	Exam. Coverage
MRP-227 Revision 1-A entries **Core Barrel Assembly** B11.1. Locking devices, including locking welds, of the external baffle-to-baffle bolts and core barrel-to-former bolts	Entry remained unchanged within MRP-227 Revision 1-A.				
MRP-227 Revision 2 entries **Core Barrel Assembly** B11.1. Locking devices, including locking welds, for the external baffle-to-baffle bolts and core barrel-to-former bolts	All plants 40 < years ≤ 80	Cracking (IASCC, IE) (Note 11)	NO CHANGE	NO CHANGE	NO CHANGE
Existing MRP-227-A entries **Lower Grid Assembly** Lower grid fuel assembly support pad items: pad, pad-to-rib section welds, Alloy X-750 dowel, cap screw, and their locking welds (Note: the pads, dowels and cap screws are included because of IE of the welds)	All plants	Cracking (IE), including the detection of separated or missing welds, missing support pads, dowels, cap screws and locking welds, or misalignment of the support pads	IMI guide tube spiders and spider-to-lower grid rib section welds	Visual (VT-3) examination. Subsequent examinations at the 10-year ISI interval unless an applicant/licensee provides an evaluation for NRC staff approval that justifies a longer interval between inspections.	Accessible surfaces of the pads, dowels, and cap screws, and associated welds in 100% of the lower grid fuel assembly support pads. See Figure 4-6.

TABLE 4-4: B&W plants Expansion items (continued)

Item	Applicability	Effect (Mechanism)	Primary Link	Exam. Meth./ Freq.	Exam. Coverage
MRP-227 Revision 1 entries **B15.1. Lower Grid Assembly** Lower grid fuel assembly support pad component items: pad, pad-to-rib section welds, Alloy X-750 dowel, cap screws, and their locking welds (Note: the pads, dowels, and cap screws are included because of IE of the welds)	All plants	Cracking (IE), including the detection of separated or missing welds, missing support pads, dowels, cap screws and locking welds, or misalignment of the support pads (Note 3)	B15. IMI guide tube spiders and spider-to-lower grid rib section welds	Visual (VT-3) examination. Subsequent examination during each 10-year interval unless an applicant/licensee provides an evaluation for NRC staff approval that justifies a longer interval between inspections.	Accessible surfaces of the pads, dowels, cap screws, and associated welds for 100% of the lower grid fuel assembly support pads. See Figure 4-6.
MRP-227 Revision 1-A entries **B15.1. Lower Grid Assembly** Lower grid fuel assembly support pad component items: pad, pad-to-rib section welds, Alloy X-750 dowel, cap screws, and their locking welds (Note: the pads, dowels, and cap screws are included because of IE of the welds)	Entry remained unchanged within MRP-227 Revision 1-A.				

TABLE 4-4: B&W plants Expansion items (continued)

Item	Applicability	Effect (Mechanism)	Primary Link	Exam. Meth./ Freq.	Exam. Coverage
MRP-227 Revision 2 entries **Lower Grid Assembly** B15.1. Lower grid fuel assembly support pad items: pad, pad-to-rib section welds, Alloy X-750 dowels, cap screw, and their locking welds	All plants 40 < years ≤ 80	Cracking (IE), including the detection of separated or missing welds, missing support pads, dowels, cap screws and locking welds, or misalignment of the support pads (Note 6) (Note: The pad, dowels, and cap screw are included because of IE of the welds [Note 13])	B15.a. IMI guide tube spiders and B15.b. IMI guide tube spider-to-lower grid rib section welds	NO CHANGE	NO CHANGE
Existing MRP-227-A entries **Lower Grid Assembly** Alloy X-750 dowel-to-lower grid fuel assembly support pad welds	All plants	Cracking (SCC), including the detection of separated or missing locking welds, or missing dowels	Alloy X-750 dowel-to-guide block welds	Visual (VT-3) examination. Subsequent examinations at the 10-year ISI interval unless an applicant/licensee provides an evaluation for NRC staff approval that justifies a longer interval between inspections.	Accessible surfaces of 100% of the support pad dowel locking welds. See Figure 4-6.

TABLE 4-4: B&W plants Expansion items (continued)

Item	Applicability	Effect (Mechanism)	Primary Link	Exam. Meth./ Freq.	Exam. Coverage
MRP-227 Revision 1 entries **B13.2. Lower Grid Assembly** Alloy X-750 dowel-to-lower grid fuel assembly support pad welds	All plants (Note 2)	Cracking (SCC), including the detection of separated or missing locking welds, or missing dowels	B13.Alloy X-750 dowel-to-guide block welds	Visual (VT-3) examination. Subsequent examination during each 10-year interval unless an applicant/licensee provides an evaluation for NRC staff approval that justifies a longer interval between inspections.	Accessible surfaces of 100% of the support pad dowel locking welds. See Figure 4-6.
MRP-227 Revision 1-A entries **B13.2. Lower Grid Assembly** Alloy X-750 dowel-to-lower grid fuel assembly support pad welds	Entry remained unchanged within MRP-227 Revision 1-A.				
MRP-227 Revision 2 entries **Lower Grid Assembly** B13.2. Alloy X-750 dowels-to-lower grid fuel assembly support pad welds	All plants (except DB) 40 < years ≤ 80	NO CHANGE	NO CHANGE	NO CHANGE	NO CHANGE

TABLE 4-4: B&W plants Expansion items (continued)

Item	Applicability	Effect (Mechanism)	Primary Link	Exam. Meth./ Freq.	Exam. Coverage
Existing MRP-227-A entries **Lower Grid Assembly** Lower grid shock pad bolts and their locking devices	TMI-1	Bolts: cracking (SCC) Locking devices: loss of material; damaged, distorted, or missing locking devices (wear or fatigue damage by failed bolts).	UCB, LCB, or FD bolts and their locking devices	Bolt: volumetric examination (UT). Locking devices: visual (VT-3) examination. Subsequent examinations at the 10-year ISI interval unless an applicant/licensee provides an evaluation for NRC staff approval that justifies a longer interval between inspections.	100% of accessible bolts and their locking devices. (Note 2) See Figure 4-4.

TABLE 4-4: B&W plants Expansion items (continued)

Item	Applicability	Effect (Mechanism)	Primary Link	Exam. Meth./ Freq.	Exam. Coverage
MRP-227 Revision 1 entries **This item is now a *Primary* item in Table 4-1:** **B14. Lower Grid Assembly** Shock pad bolts and their locking devices	TMI-1	Bolts: cracking (SCC, fatigue) Locking devices: loss of material, damaged or distorted or missing locking devices (wear or fatigue damage by failed bolts)	*Expansion link is*: UTS bolts and LTS bolts and their locking devices	Bolts: volumetric (UT) examination during the next 10-year ISI interval. Locking devices: visual (VT-3) examination during the next 10-year ISI interval. Subsequent examination during each 10-year ISI interval unless an evaluation of the baseline results, submitted for NRC staff approval, justifies a longer interval between examinations.	100% of accessible bolts and their locking devices. (Note 6) See Figure 4-4.
MRP-227 Revision 1-A entries **This item is now a *Primary* item in Table 4-1:** **B14. Lower Grid Assembly** Shock pad bolts and their locking devices	Entry remained unchanged within MRP-227 Revision 1-A.				

TABLE 4-4: B&W plants Expansion items (continued)

Item	Applicability	Effect (Mechanism)	Primary Link	Exam. Meth./ Freq.	Exam. Coverage
MRP-227 Revision 2 entries This item has been removed from MRP-227.	This item has been removed from MRP-227.				
Existing MRP-227-A entries **Lower Grid Assembly** Lower thermal shield (LTS) bolts (ANO-1, DB and TMI-1) or studs/nuts (ONS, CR-3) and their locking devices	All plants	Bolts or studs/nuts: cracking (SCC) Locking devices: loss of material; damaged, distorted, or missing locking devices (wear or fatigue damage by failed bolts).	UCB, LCB, or FD bolts and their locking devices	Bolt or stud/nut: volumetric examination (UT). Locking devices: visual (VT-3) examination. Subsequent examinations at the 10-year ISI interval unless an applicant/licensee provides an evaluation for NRC staff approval that justifies a longer interval between inspections.	100% of accessible bolts and their locking devices. (Note 2) See Figure 4-8.

TABLE 4-4: B&W plants Expansion items (continued)

Item	Applicability	Effect (Mechanism)	Primary Link	Exam. Meth./ Freq.	Exam. Coverage
MRP-227 Revision 1 entries **B8.1. Lower Grid Assembly** Lower thermal shield (LTS) bolts (ANO-1, DB, and TMI-1) or studs/nuts (ONS-1, ONS-2, and ONS-3) and their locking devices	All plants	Bolts or studs/nuts: cracking (SCC) Locking devices: Loss of material; damaged, distorted, or missing locking devices (wear or fFatigue damage by failed bolts or studs/nuts)	B7, B8, B12. UCB, LCB, or FD bolts and their locking devices B14. Shock pad bolts and their locking devices (TMI-1 only)	Bolts or studs/nuts: volumetric (UT) examination. Locking devices: visual (VT-3) examination. Subsequent examination during each 10-year interval unless an applicant/licensee provides an evaluation for NRC staff approval that justifies a longer interval between inspections.	100% of accessible bolts or studs/nuts and their locking devices. (Note 5) See Figure 4-8.
MRP-227 Revision 1-A entries **B8.1. Lower Grid Assembly** Lower thermal shield (LTS) bolts (ANO-1, DB, and TMI-1) or studs/nuts (ONS-1, ONS-2, and ONS-3) and their locking devices	NO CHANGE	NO CHANGE	B7. UCB, B8. LCB, or B12. FD bolts and their locking devices B14. Shock pad bolts and their locking devices (TMI-1 only)	NO CHANGE	NO CHANGE

TABLE 4-4: B&W plants Expansion items (continued)

Item	Applicability	Effect (Mechanism)	Primary Link	Exam. Meth./ Freq.	Exam. Coverage
MRP-227 Revision 2 entries **Lower Grid Assembly** B8.1. Lower thermal shield (LTS) bolts (ANO-1, DB) or studs and nuts (ONS-1, ONS-2, and ONS-3)	All plants 40 < years ≤ 80	Bolts or studs: cracking (SCC) Nuts: cracking (SCC)	B7. UCB, B8. LCB, or B12. FD bolts	Bolts or studs: volumetric (UT) examination. Nuts: visual (VT-3) examination. Subsequent examination during each 10-year interval unless an applicant/licensee provides an evaluation for NRC staff approval that justifies a longer interval between inspections.	100% of accessible bolts or studs and nuts. (Note 7) See Figure 4-8(a) and (b).
Entry not Existing in MRP-227-A *The following item did not exist in the MRP-227-A table entries.*					
MRP-227-Revision 1 entries **Lower Grid Assembly** B10.3. Lower grid rib section	All plants	Cracking (IE), including the detection of readily detectable cracking (Note 3)	B10. Baffle plates	Visual (VT-3) examination. Subsequent examination during each 10-year interval unless an applicant/licensee provides an evaluation for NRC staff approval that justifies a longer interval between inspections.	100% of accessible surfaces of the lower grid rib section heat-affected zone (HAZ) adjacent to the spider-to-lower grid rib section welds. See Figures 4-3 and 4-6.
MRP-227-Revision 1-A entries B10.3.Lower grid rib section	Entry remained unchanged within MRP-227 Revision 1-A.				

TABLE 4-4: B&W plants Expansion items (continued)

Item	Applicability	Effect (Mechanism)	Primary Link	Exam. Meth./ Freq.	Exam. Coverage
MRP-227 Revision 2 entries **Lower Grid Assembly** B10.3. Lower grid rib section	All plants 40 < years ≤ 60	Cracking (IE), including the detection of readily detectable cracking (Note 6)	NO CHANGE	NO CHANGE	100% of accessible surfaces of 0.25 in. (0.64 cm) of the adjacent base metal of the lower grid rib to the spider-to-lower grid rib section welds. (Note 14) See Figures 4-3 and 4-6.
Entry not Existing in MRP-227-A, MRP-227, Revision 1, or MRP-227, Revision 1-A entries The following items did not exist in the MRP-227-A, MRP-227, Revision 1, or MRP-227, or Revision 1-A table entries.					

TABLE 4-4: B&W plants Expansion items (continued)

Item	Applicability	Effect (Mechanism)	Primary Link	Exam. Meth./ Freq.	Exam. Coverage
MRP-227 Revision 2 entries **Upper Grid Assembly** B15.2. Upper grid fuel assembly support pad items: pad, Alloy X-750 dowels, cap screw, and their locking welds	All plants 60 < years ≤ 80	Cracking (IE), including the detection of separated or missing welds, missing support pads, dowels, cap screws and locking welds, or misalignment of the support pads (Note 6)	B15.a. IMI guide tube spiders and B15.b. IMI guide tube spider-to-lower grid rib section welds	Visual (VT-3) examination. Subsequent examination during each 10-year ISI interval unless an applicant/licensee provides an evaluation for NRC staff approval that justifies a longer interval between inspections.	Accessible surfaces of the pads, dowels, cap screws, and associated welds for 100% of the upper grid fuel assembly support pads. See Figure 4-14.
MRP-227 Revision 2 entries **Plenum Cover Assembly** B20.1. Plenum cover weldment ribs to each other welds	All plants 60 < years ≤ 80 (Note 4)	Cracking (fatigue), including the detection of linear indications	B20. Core barrel cylinder top flange circumferential weld regions	Enhanced visual (EVT-1) examination. Subsequent examination during each 10-year ISI interval unless an applicant/licensee provides an evaluation for NRC staff approval that justifies a longer interval between inspections. Alternatively, in lieu of examination, this item can be addressed by evaluation that is submitted for NRC staff approval.	100% of the exterior plenum cover weldment rib welds accessible from the top of the plenum assembly at or just under the edge of the plenum cover plate. See Figure 4-13.

TABLE 4-4: B&W plants Expansion items (continued)

Item	Applicability	Effect (Mechanism)	Primary Link	Exam. Meth./ Freq.	Exam. Coverage
MRP-227 Revision 2 entries **Core Support Shield Assembly** B20.2. Core support shield cylinder top flange	All plants 60 < years ≤ 80 (Note 4)	Cracking (fatigue), including the detection of linear indications	B20. Core barrel cylinder top flange circumferential weld regions	Enhanced visual (EVT-1) examination. Subsequent examination during each 10-year ISI interval unless an applicant/licensee provides an evaluation for NRC staff approval that justifies a longer interval between inspections. Alternatively, in lieu of examination, this item can be addressed by evaluation that is submitted for NRC staff approval.	100% of the accessible OD surface of the core support shield top flange thickness transition; the coverage shall be 2 in. (5.08 cm) wide on the radius of the transition (see Figure 4-12(a) and (b)). (Note 5) See Figure 4-12 (a) and (b).
Existing MRP-227-A entries					

Notes:

1. Examination acceptance criteria and expansion criteria for the B&W components are in Table 5-1.
2. A minimum of 75% of the total population (examined + unexamined) must be examined for inspection credit.
3. The primary aging degradation mechanisms for loss of joint tightness for these items are IC and ISR. Fatigue and wear, which can also lead to cracking, are secondary aging degradation mechanisms after significant stress relaxation and loss of preload has occurred as a result of IC/ISR. Bolt stress relaxation cannot readily be inspected by NDE. Only bolt cracking could be inspected by UT inspection if it were possible for these bolts. Therefore, the effects of loss of joint tightness and/or cracking on the functionality of these bolts relative to the entire core barrel assembly will be addressed by analysis of the core barrel assembly, which will be performed to address Applicant/Licensee action item 6 of the SE [27].

TABLE 4-4: B&W plants Expansion items (continued)

MRP-227 Revision 1 entries

Notes:

1. Examination acceptance criteria and expansion criteria for the B&W component items and welds are in Sections 5.1–5.3 of this document.
2. For the alternate configuration at DB, the difference in configuration shall be addressed on a unit-specific basis.
3. Loss of ductility and fracture toughness, which are induced by thermal aging or neutron irradiation embrittlement, are not directly monitored. These effects are indirectly managed by performing periodic visual examinations capable of detecting cracking in the component.
4. It is known that some of the vent valves originally installed to the B&W units were replaced with spares because of locking device issues. Although the ferrite contents of the originally installed vent valve bodies are known, the serial number [S/N] and corresponding ferrite contents of the currently installed vent valve bodies are not fully known for the B&W units. Therefore, each utility shall identify the body S/N and heat number for each installed vent valve to determine installed heat of material and the ferrite content. The S/Ns may be visible with an underwater video camera, for example, during vent valve exercising. If the ferrite content of the currently installed vent valve bodies can be verified to be under the TE screening criterion for the material, the vent valve bodies can be removed as an Expansion component item for the particular B&W unit and become a No Additional Measures component item. However, because vent valve assemblies are typically replaced in whole rather than by part, each time any changes are made to vent valve assemblies (for example, replacement of a whole assembly), the vent valve body S/N, heat number, and ferrite content need to be verified. If, at any time, the ferrite content of any installed vent valve body is greater than the screening criterion for thermal embrittlement, that vent valve body will need to be included as an Expansion component item.
5. A minimum of 75% of the total population (examined + unexamined) must be examined for inspection credit.
6. The primary aging degradation mechanisms for loss of joint tightness for this item are IC and ISR. Fatigue and wear, which can also lead to cracking, are secondary aging degradation mechanisms after significant stress relaxation and loss of preload has occurred as a result of IC/ISR. Bolt stress relaxation cannot readily be inspected by NDE. Only bolt cracking could be inspected by UT inspection if it were possible for these bolts. Therefore, the effects of loss of joint tightness and/or cracking on the functionality of these bolts relative to the entire core barrel assembly will be addressed by analysis of the core barrel assembly.
7. This table entry for the SSHT bolts also includes the aging degradation mechanisms of ISR/IC/wear/fatigue for the compression collar and washer of the SSHT bolt.
8. The aging degradation mechanism consequence of overload is only applicable to the internal baffle-to-baffle bolts, not the core barrel-to-former bolts and external baffle-to-baffle bolts.

TABLE 4-4: B&W plants Expansion items (continued)

MRP-227 Revision 1-A entries

Notes:

1. Examination acceptance criteria and expansion criteria for the B&W component items and welds are in Sections 5.1–5.3 of this document. Degradation exhibited in any of these primary links requires expansion in accordance with the criteria noted in Table 5-1.
2. For the alternate configuration at DB, the difference in configuration shall be addressed on a unit-specific basis.
3. Loss of ductility and fracture toughness, which are induced by thermal aging or neutron irradiation embrittlement, are not directly monitored. These effects are indirectly managed by performing periodic visual examinations capable of detecting cracking in the component.
4. It is known that some of the vent valves originally installed to the B&W units were replaced with spares because of locking device issues. Although the ferrite contents of the originally installed vent valve bodies are known, the serial number [S/N] and corresponding ferrite contents of the currently-installed vent valve bodies are not fully known for the B&W units. Therefore, each utility shall identify the body S/N and heat number for each installed vent valve to determine installed heat of material and the ferrite content. The S/Ns may be visible with an underwater video camera, for example, during vent valve exercising. If the ferrite content of the currently installed vent valve bodies can be verified to be under the TE screening criterion for the material, the vent valve bodies can be removed as an Expansion component item for the particular B&W unit and become a No Additional Measures component item. However, because vent valve assemblies are typically replaced in whole rather than by part, each time any changes are made to vent valve assemblies (for example, replacement of a whole assembly), the vent valve body S/N, heat number, and ferrite content need to be verified. If, at any time, the ferrite content of any installed vent valve body is greater than the screening criterion for thermal embrittlement, that vent valve body will need to be included as an Expansion component item.
5. A minimum of 75% of the total population (examined + unexamined) must be examined for inspection credit.
6. The primary aging degradation mechanisms for loss of joint tightness for this item are IC and ISR. Fatigue and wear, which can also lead to cracking, are secondary aging degradation mechanisms after significant stress relaxation and loss of preload has occurred due to IC/ISR. Bolt stress relaxation cannot readily be inspected by NDE. Only bolt cracking could be inspected by UT inspection if it were possible for these bolts. Therefore, the effects of loss of joint tightness and/or cracking on the functionality of these bolts relative to the entire core barrel assembly will be addressed by analysis of the core barrel assembly.
7. This table entry for the SSHT bolts also includes the aging degradation mechanisms of ISR/IC/wear/fatigue for the compression collar and washer of the SSHT bolt.
8. The aging degradation mechanism consequence of overload is applicable only to the internal baffle-to-baffle bolts, not the core barrel-to-former bolts and external baffle-to-baffle bolts.
9. As noted in Section 3.1.3.1 of the SE for MRP-227, Rev. 1, licensees have the option of screening out the vent valve bodies using certified material test report (CMTR) data or using the generic technical report PWROG-15032-NP [34] to show that the vent valve bodies have a high probability of having ferrite below the screening criterion for TE.

TABLE 4-4: B&W plants Expansion items (continued)

MRP-227 Revision 2 entries

Notes:

1. Applicability in this column is for both plant and renewed licensing period, as noted.
2. Examination acceptance criteria and expansion criteria for the B&W component items and welds are in Sections 5.1–5.3 of this document. Degradation exhibited in any of these primary links requires expansion in accordance with the criteria noted in Table 5-1.
3. The term "10-year ISI interval" is intended to mean the plant's existing schedule associated with removal of the core barrel assembly, that is, during the next scheduled 10-year ISI interval examination. As defined in the ASME B&PV Code Section XI, the first inspection interval is defined as 10 years following the initial start of a plant's commercial startup, and successive inspection intervals are defined as 10 years following the previous inspection interval. Each inspection interval may be extended by as much as 1 year and may be reduced without restriction, provided the examinations required for the interval have been completed. Successive intervals shall not extend more than 1 year beyond the original pattern of 10-year intervals and shall not exceed 11 years in length.
4. The following note is contained in Section 3.2, Item H, of MRP-189, Rev. 3 [10] regarding the fatigue ranking analysis used for perform the preliminary categorization with respect to fatigue:

   Note: The PWR internals fatigue ranking analysis performed was specific to ONS-1, ONS-2, and ONS-3 but is considered representative for the B&W design. However, a plant-specific analysis is required to validate applicability to a given non-ONS plant when implementing this revision of MRP-189 or the associated downstream reports.
5. Examination coverage requires a minimum of 75% of the accessible OD surface of the core support shield top flange thickness transition with the radius coverage specified.
6. Loss of ductility and fracture toughness, which are induced by thermal aging or neutron irradiation embrittlement, are not directly monitored. These effects are indirectly managed by performing periodic visual examinations capable of detecting cracking in the component.
7. A minimum of 75% of the total population (examined + unexamined) must be examined for inspection credit.
8. The primary age-related degradation mechanisms for loss of joint tightness for this item are ISR/IC. Fatigue and wear, which can also lead to cracking, are secondary age-related degradation mechanisms after significant stress relaxation and loss of preload has occurred due to ISR/IC. Bolt stress relaxation cannot readily be inspected by NDE. Only bolt cracking could be inspected by volumetric (UT) examination if it were possible for these bolts. Therefore, the effects of loss of joint tightness and/or cracking on the functionality of these bolts relative to the entire core barrel assembly will be addressed by analysis of the core barrel assembly.
9. The age-related degradation mechanism consequence of overload is applicable only to the internal baffle-to-baffle bolts, not the core barrel-to-former bolts and external baffle-to-baffle bolts.
10. The age-related degradation mechanism of VS is only applicable to the baffle-to-baffle bolts, not the core barrel-to-former bolts.

TABLE 4-5: CE plants Expansion items

Item	Applicability	Effect (Mechanism)	Primary Link	Exam. Meth./ Freq.	Exam. Coverage
MRP-227 Revision 1-A entries **Core Shroud Assembly (Bolted)** C1.2. Barrel-shroud bolts	Bolted plant designs	Cracking (IASCC, fatigue) Aging management (IE and ISR)	C1. Core shroud bolts	Volumetric (UT) examination. Reinspection every 10 years following initial inspection.	100% of accessible barrel shroud bolts or as supported by plant specific justification. See Figure 4-34.
MRP-227 Revision 2 entries **Core Shroud Assembly (Bolted)** C1.2. Barrel-shroud bolts	This component has been removed from MRP-227, Revision 2.				
MRP-227 Revision 1-A entries **Core Support Barrel Assembly** C5.1. Lower girth weld (LGW)	All plants	Cracking (SCC, fatigue)	C5. Upper flange weld (UFW)	Enhanced visual (EVT-1) examination. Reinspection every 10 years following initial inspection.	100% of the accessible weld length of the OD of the LGW and 0.75 in. (1.91 cm) of adjacent base metal shall be examined. (Note 5) See Figures 4-29 and 4-30.
MRP-227 Revision 2 entries **Core Support Barrel Assembly** C5.1. Lower girth weld (LGW)	All plants	Cracking (SCC)	C5. Upper flange weld (UFW)	Enhanced visual (EVT-1), volumetric (UT), or surface (ET) examination. Reinspection every 10 years following initial inspection. (Note 3)	100% of the accessible weld length of the OD of the LGW and 0.75 in. (1.91 cm) of adjacent base metal shall be examined. (Note 4) See Figures 4-17 and 4-18.

TABLE 4-5: CE plants Expansion items (continued)

Item	Applicability	Effect (Mechanism)	Primary Link	Exam. Meth./ Freq.	Exam. Coverage
MRP-227 Revision 1-A entries **Core Support Barrel Assembly** C5.2. Upper girth weld (UGW) and C5.3. Upper axial weld (UAW)	All plants	Cracking (SCC) Aging management (IE)	C5.Upper flange weld (UFW)	Enhanced visual (EVT-1) examination. Reinspection every 10 years following initial inspection.	100% of the accessible weld length of one side of the UGW and UAW and 0.75 in. (1.91 cm) adjacent base metal shall be examined. (Notes 2 and 5) See Figure 4-29.
MRP-227 Revision 2 entries **Core Support Barrel Assembly** C5.2. Upper girth weld (UGW) and C5.3. Upper axial weld (UAW)	All plants	Cracking (SCC) Aging management (IE)	C5. Upper flange weld (UFW)	Enhanced visual (EVT-1), volumetric (UT), or surface (ET) examination. Reinspection every 10 years following initial inspection. (Note 3)	100% of the accessible weld length of one side of the UGW and UAW and 0.75 in. (1.91 cm) adjacent base metal shall be examined. (Note 5) See Figure 4-17.
MRP-227 Revision 1-A entries **Lower Support Structure** C5.4. Lower core support beams	All plants except those with welded core shrouds assembled with full-height shroud plates	Cracking (SCC, fatigue) including damaged or fractured material	C5. Upper flange weld (UFW)	Enhanced visual (EVT-1) examination. Reinspection every 10 years following initial inspection.	25% of welds and 0.75 in. (1.91 cm) of adjacent base metal or locations as justified by plant-specific evaluation. See Figure 4-35.

TABLE 4-5: CE plants Expansion items (continued)

Item	Applicability	Effect (Mechanism)	Primary Link	Exam. Meth./ Freq.	Exam. Coverage
MRP-227 Revision 2 entries **Lower Support Structure** C5.4. Lower core support beams	Entry remains unchanged within MRP-227 Revision 2.				
MRP-227 Revision 1-A entries **Core Support Barrel Assembly** C6.1. Middle axial weld (MAW) C6.2. Lower axial weld (LAW)	All plants	Cracking (SCC, IASCC) Aging management (IE)	C6. Middle girth weld (MGW)	Enhanced visual (EVT-1) examination Reinspection every 10 years following initial inspection.	100% of the accessible weld length of the OD of the MAW and LAW and 0.75 in. (1.91 cm) of adjacent base metal shall be examined. (Note 5) See Figure 4-29.
MRP-227 Revision 2 entries **Core Support Barrel Assembly** C6.1. Middle axial weld (MAW) C6.2. Lower axial weld (LAW)	All plants	Cracking (SCC, IASCC) Aging management (IE)	C6. Middle girth weld (MGW)	Enhanced visual (EVT-1), volumetric (UT), or surface (ET) examination Reinspection every 10 years following initial inspection. (Note 3)	100% of the accessible weld length of the OD of the MAW and LAW and 0.75 in. (1.91 cm) of adjacent base metal shall be examined. (Note 4) See Figure 4-17.

TABLE 4-5: CE plants Expansion items (continued)

Item	Applicability	Effect (Mechanism)	Primary Link	Exam. Meth./ Freq.	Exam. Coverage
MRP-227 Revision 1-A entries **Core Shroud Assembly (Bolted)** C1.1. Core support column bolts	Bolted plant designs	Cracking (IASCC, fatigue) Aging management (IE)	C1.Core shroud bolts	Ultrasonic (UT) examination. Reinspection every 10 years following initial inspection.	100% (or as supported by plant-specific analysis) of core support column bolts (Minimum of 75% of the total population). See Figure 4-37.
MRP-227 Revision 2 entries **Core Shroud Assembly (Bolted)** C1.1. Core support column bolts	This component has been removed from MRP-227, Revision 2.				
MRP-227 Revision 1-A entries **Core Shroud Assembly (Welded)** C2.1. Remaining axial welds	Plant designs with core shrouds assembled in two vertical sections	Cracking (IASCC) Aging management (IE)	C2. Core shroud plate-former plate weld	Enhanced visual (EVT-1) examination. Reinspection every 10 years following initial inspection.	75% of the remaining axial weld length and 0.75 in. (1.91 cm) of adjacent base metal as visible from the core side of the shroud other than that already inspected under the primary link. See Figure 4-26.
MRP-227 Revision 2 entries **Core Shroud Assembly (Welded)** C2.1. Remaining axial welds	Entry remains unchanged within MRP-227 Revision 2.				

TABLE 4-5: CE plants Expansion items (continued)

Item	Applicability	Effect (Mechanism)	Primary Link	Exam. Meth./ Freq.	Exam. Coverage
MRP-227 Revision 1-A entries **Core Shroud Assembly (Welded)** C3.1. Remaining axial welds, C3.2. Ribs and rings	Only plants with welded core shrouds assembled with full-height shroud plates	Cracking (IASCC) Aging management (IE)	C3. Shroud plates of welded core shroud assemblies	Remaining axial welds: enhanced visual (EVT-1) examination. Reinspection every 10 years following initial inspection. Ribs and rings: no examination requirements. Justify by evaluation or by replacement.	Remaining axial welds: 75% of the remaining axial weld length and 0.75 in. (1.91 cm) of adjacent base metal as visible from the core side of the shroud other than that already inspected under the primary link. Ribs and rings: Inaccessible See Figure 4-37.
MRP-227 Revision 2 entries **Core Shroud Assembly (Welded)** C3.1. Remaining axial welds	Only plants with welded core shrouds assembled with full-height shroud plates	Cracking (IASCC) Aging management (IE)	C3. Shroud plates of welded core shroud assemblies	Remaining axial welds: enhanced visual (EVT-1) examination. Reinspection every 10 years following initial inspection.	Remaining axial welds: 75% of the remaining axial weld length and 0.75 in. (1.91 cm) of adjacent base metal as visible from the core side of the shroud other than that already inspected under the Primary link. See Figure 4-23.

TABLE 4-5: CE plants Expansion items (continued)

Item	Applicability	Effect (Mechanism)	Primary Link	Exam. Meth./ Freq.	Exam. Coverage
MRP-227 Revision 1-A entries **Control Element Assembly** C11.1. Remaining instrument guide tubes	All plants with instrument guide tubes in the CEA shroud assembly	Cracking (SCC, fatigue) that results in missing supports or separation at the welded joint between the tubes and supports.	C11. Peripheral instrument guide tubes within the CEA shroud assemblies	Visual (VT-3) examination. Reinspection every 10 years following initial inspection.	100% of tubes in CEA shroud assemblies (minimum of 75% of the total population of remaining instrument guide tubes) focusing on the supports and the connecting welds between the supports and the guide tube and CEA shroud. See Figure 4-32.
MRP-227 Revision 2 entries **Control Element Assembly** C11.1. Remaining instrument guide tubes and supports	All plants with instrument guide tubes in the CEA shroud assembly	Cracking (SCC, fatigue) that results in missing supports or separation at the welded joint between the tubes and supports.	C11. Peripheral instrument guide tubes and supports within the CEA shroud assemblies	Visual (VT-3) examination. Reinspection every 10 years following initial inspection.	100% of tubes in CEA shroud assemblies (minimum of 75% of the total population of remaining instrument guide tubes), focusing on the supports and the connecting welds between the supports and the guide tube and CEA shroud. See Figure 4-20.

TABLE 4-5: CE plants Expansion items (continued)

Item	Applicability	Effect (Mechanism)	Primary Link	Exam. Meth./ Freq.	Exam. Coverage
MRP-227 Revision 1-A entries					
Lower Support Structure C6.3. Core support columns	Plants with full-height bolted or half-height welded core shroud plates	Cracking (SCC, IASCC, fatigue, including damaged or fractured material) Aging management (IE, TE)	C6. Middle girth weld (MGW)	Visual (VT-3) examination Reinspection every 10 years following initial inspection.	Plants with full-height bolted core shroud plates: 25% of the total number of column assemblies (both visible and non-visible from above the core support plate) using a VT-3 examination from above the core support plate. The inspection coverage must be evenly distributed across the population of column assemblies. Plants with core shrouds assembled in two vertical sections: 25% of the accessible surfaces of the core support column welds, from the top side of the core support plate. The inspection coverage must be evenly distributed across the population of core support column welds. (Notes 3 and 4) See Figure 4-36.

TABLE 4-5: CE plants Expansion items (continued)

Item	Applicability	Effect (Mechanism)	Primary Link	Exam. Meth./ Freq.	Exam. Coverage
MRP-227 Revision 2 entries **Lower Support Structure** C6.3. Core support columns	Plant designs with core shrouds assembled in two vertical sections	Cracking (SCC, IASCC, fatigue, including damaged or fractured material) Aging management (IE, TE)	C6. Middle girth weld (MGW)	Visual (VT-3) examination. Reinspection every 10 years following initial inspection.	25% of the accessible surfaces of the core support column welds, from the top side of the core support plate. The inspection coverage must be evenly distributed across the population of core support column welds. (Notes 6 and 7) See Figure 4-22.
MRP-227 Revision 2 entries **Core Support Barrel Assembly** C5.5. CSB flexure weld (CSBFW) (NOTE: This Expansion component manages cracking caused by SCC for the CSBFW and is separated from the primary component C7. CSB flexure weld (CSBFW), which manages cracking caused by fatigue.)	All plants with welded core shrouds (full-height and two-section)	Cracking (SCC)	C5. Upper flange weld (UFW)	Enhanced visual (EVT-1), volumetric (UT), or surface (ET) examination. Reinspection every 10 years following initial inspection. (Note 3)	100% of the accessible weld length of the CSBFW and 0.75 in. (1.91 cm) of adjacent base metal shall be examined. (Note 8) See Figure 4-18.

TABLE 4-5: CE plants Expansion items (continued)

Item	Applicability	Effect (Mechanism)	Primary Link	Exam. Meth./ Freq.	Exam. Coverage
MRP-227 Revision 2 entries					
Upper Internals Assembly C6.4. Fuel alignment plate (Expansion applicable only after entering SLR period) (NOTE: This is a new Expansion component added in Revision 2.)	All plants with welded core shrouds assembled in two vertical sections	Cracking (SCC, IASCC, fatigue) Aging management (IE)	C6. Middle girth weld (MGW)	Visual (VT-3) examination. Reinspection every 10 years following initial inspection.	Minimum of 25% of core side surfaces. See Figure 4-19.

TABLE 4-5: CE plants Expansion items (continued)

MRP-227 Revision 1-A entries

Notes:

1. Examination acceptance criteria and expansion criteria for the CE components are in Table 5-2.
2. Examination coverage requires examination of either the ID or the OD of the weld.
3. The stated minimum coverage requirement is the minimum if no significant indications are found. However, the examination acceptance criteria in Section 5 require that additional coverage must be achieved in the same outage if significant flaws are found. This contingency should be considered for inspection planning purposes.
4. Justification that adequate distribution of the inspection coverage has been achieved can be based on geometric or layout arguments. Possible examples include, but are not limited to, inspection of all column assemblies or accessible core support column welds in one quadrant of the core support plate (based on the azimuthal symmetry of the plate) or inspecting every fourth column or weld across the entire plate.
5. Examination coverage requires a minimum of 75% of the weld length for either the ID or the OD of the weld being examined.

MRP-227 Revision 2 entries

Notes:

1. The examination requirements detailed in this table may be replaced or modified by a plant implementing an alternate aging management strategy that addresses the aging degradation mechanisms within these guidelines, supported by a plant-specific technical justification. This may be necessary in cases such as bolt replacements or component modification. See Appendix C for additional details on performing such evaluations.
2. Examination acceptance criteria and expansion criteria for the CE components are in Table 5-2.
3. UT or ET examination of core barrel welds must be supported by a technical justification developed per MRP-228 [3].
4. Examination coverage requires a minimum of 75% of the length of OD of the weld being examined.
5. Examination coverage requires a minimum of 75% of the length of either the ID or the OD of the weld being examined.
6. The stated minimum coverage requirement is the minimum if no significant indications are found. However, the examination acceptance criteria in Section 5 require that additional coverage must be achieved in the same outage if significant flaws are found. This contingency should be considered for inspection planning purposes.
7. Justification that adequate distribution of the inspection coverage has been achieved can be based on geometric or layout arguments. Possible examples include, but are not limited to, inspection of all column assemblies or accessible core support column welds in one quadrant of the core support plate (based on the azimuthal symmetry of the plate) or inspecting every fourth column or weld across the entire plate. Examination coverage requires a minimum of 75% of the length of the weld being examined.
8. Examination coverage requires a minimum of 75% of the length of the weld being examined
9. The entries in this table are applicable to CE-designed plants operating 40 to 80 years.

TABLE 4-6: Westinghouse plants Expansion items

Item	Applicability	Effect (Mechanism)	Primary Link	Exam. Meth./ Freq.	Exam. Coverage
MRP-227 Revision 1-A entries **Control Rod Guide Tube Assembly** W2.1. Remaining CRGT lower flange welds	All plants	Cracking (SCC, fatigue) Aging management (IE and TE)	W2. CRGT lower flange welds	Enhanced visual (EVT-1) examination to determine the presence of cracklike surface flaws in flange welds. Subsequent examination at a 10-year interval.	A minimum of 75% of the CRGT assembly lower flange weld surfaces and 0.25 in. (0.64 cm) of the adjacent base metal for the flange welds not inspected under the primary link.
MRP-227 Revision 2 entries **Control Rod Guide Tube Assembly** W2.1. Remaining CRGT lower flange welds	All plants	Cracking (SCC, IASCC, fatigue) Aging management (IE and TE)	W2. CRGT lower flange welds	Enhanced visual (EVT-1) examination to determine the presence of cracklike surface flaws in flange welds. Subsequent examination at a 10-year interval.	A minimum of 75% of the CRGT assembly lower flange weld surfaces and 0.25 in. (0.64 cm) of the adjacent base metal for the flange welds at locations with control rods not inspected under the primary link. See Figure 4-31.
MRP-227 Revision 1-A entries **Bottom Mounted Instrumentation System** W2.2. Bottom-mounted instrumentation (BMI) column bodies	All plants	Cracking (fatigue) including the detection of completely fractured column bodies Aging management (IE)	W2. CRGT lower flange welds	Visual (VT-3) examination. Reinspection every 10 years following initial inspection.	100% of BMI column bodies for which difficulty is detected during flux thimble insertion/withdrawal. See Figure 4-24.

TABLE 4-6: Westinghouse plants Expansion items (continued)

Item	Applicability	Effect (Mechanism)	Primary Link	Exam. Meth./ Freq.	Exam. Coverage
MRP-227 Revision 2 entries **Bottom-Mounted Instrumentation System** W2.2. Bottom-mounted instrumentation (BMI) column bodies and cruciforms	All plants	Cracking (fatigue) including the detection of completely fractured column bodies Aging management (IE and TE)	W2. CRGT lower flange welds	Visual (VT-3) examination. Reinspection every 10 years following initial inspection.	100% of BMI column bodies for which difficulty is detected during flux thimble insertion/withdrawal. See Figure 4-43.
MRP-227 Revision 1-A entries **Core Barrel Assembly** W3.1. Upper girth weld (UGW)	All plants	Cracking (SCC)	W3. Upper core barrel flange weld (UFW)	Enhanced visual (EVT-1) examination. Reinspection every 10 years following initial inspection.	100% of the accessible weld length of one side of the UGW and 0.75 in. (1.91 cm) of adjacent base metal shall be examined (Notes 2 and 5). See Figure 4-13.
MRP-227 Revision 2 entries **Core Barrel Assembly** W3.1. Upper girth weld (UGW)	All plants	Cracking (SCC)	W3. Upper core barrel flange weld (UFW)	Enhanced visual (EVT-1), volumetric (UT), or surface (ET) examination. Reinspection every 10 years following initial inspection. (Note 3)	100% of the accessible weld length of one side of the UGW and 0.75 in. (1.91 cm) of adjacent base metal shall be examined (Notes 4 and 5). See Figure 4-32.

TABLE 4-6: Westinghouse plants Expansion items (continued)

Item	Applicability	Effect (Mechanism)	Primary Link	Exam. Meth./ Freq.	Exam. Coverage
MRP-227 Revision 1-A entries **Core Barrel Assembly** W3.2. Upper axial weld (UAW)	All plants	Cracking (SCC)	W3. Upper core barrel flange weld (UFW)	Enhanced visual (EVT-1) examination. Reinspection every 10 years following initial inspection.	100% of the accessible weld length of one side of the UAW and 0.75 in. (1.91 cm) of adjacent base metal shall be examined (Notes 2 and 5). See Figure 4-13.
MRP-227 Revision 2 entries **Core Barrel Assembly** W3.2. Upper axial weld (UAW)	All plants	Cracking (SCC)	W3. Upper core barrel flange weld (UFW) (secondary expansion of W3.1. UGW or W3.3. LFW)	Enhanced visual (EVT-1), volumetric (UT), or surface (ET) examination. Reinspection every 10 years following initial inspection. (Note 3)	100% of the accessible weld length of one side of the UAW and 0.75 in. (1.91 cm) of adjacent base metal shall be examined (Notes 4 and 5). See Figure 4-32.
MRP-227 Revision 1-A entries **Core Barrel Assembly** W3.3. Lower flange weld (LFW)	All plants	Cracking (SCC)	W3. Upper core barrel flange weld (UFW)	Enhanced visual (EVT-1) examination. Reinspection every 10 years following initial inspection.	100% of the accessible weld length of the OD surface of the LFW and 0.75 in. (1.91 cm) of adjacent base metal shall be examined (Note 5). See Figure 4-13.

TABLE 4-6: Westinghouse plants Expansion items (continued)

Item	Applicability	Effect (Mechanism)	Primary Link	Exam. Meth./ Freq.	Exam. Coverage
MRP-227 Revision 2 entries **Core Barrel Assembly** W3.3. Lower flange weld (LFW)	All plants	Cracking (SCC)	W3. Upper core barrel flange weld (UFW)	Enhanced visual (EVT-1), volumetric (UT), or surface (ET) examination. Reinspection every 10 years following initial inspection. (Note 3)	100% of the accessible weld length of the OD surface of the LFW and 0.75 in. (1.91 cm) of adjacent base metal shall be examined (Note 5). See Figure 4-32.
MRP-227 Revision 1-A entries **Lower Internals Assembly** W3.4. Lower support forging or castings	All plants	Cracking (SCC) Aging management (TE in casting) [34]	W3. Upper core barrel flange weld (UFW)	Visual (VT-3) examination. Reinspection every 10 years following initial inspection.	Minimum of 25% of bottom (non-core side) surface (Note 3). See Figure 4-20.
MRP-227 Revision 2 entries **Lower Internals Assembly** W3.4. Lower support forging or castings	All plants	Cracking (SCC) Aging management (TE in casting) [40]	W3. Upper core barrel flange weld (UFW) (secondary expansion of W3.3. LFW)	Visual (VT-3) examination. Reinspection every 10 years following initial inspection.	Minimum of 25% of bottom (non-core side) surface (Note 6). See Figure 4-39.
MRP-227 Revision 1-A entries **Upper Internals Assembly** W4.1. Upper core plate	All plants	Cracking (fatigue), wear Aging management (IE)	W4. Lower firth weld (LGW)	Visual (VT-3) examination. Reinspection every 10 years following initial inspection.	Minimum of 25% of core side surfaces. (Note 3) See Figure 4-19.

TABLE 4-6: Westinghouse plants Expansion items (continued)

Item	Applicability	Effect (Mechanism)	Primary Link	Exam. Meth./ Freq.	Exam. Coverage
MRP-227 Revision 2 entries **Upper Internals Assembly** W4.1. Upper core plate	All plants	Cracking (IASCC), Aging management (IE)	W4. Lower girth weld (LGW)	Visual (VT-3) examination. Reinspection every 10 years following initial inspection.	Minimum of 25% of core side surfaces. (Note 6) See Figure 4-38.
MRP-227 Revision 1-A entries **Core Barrel Assembly** W4.2. Middle axial welds (MAW) and W4.3. Lower axial welds (LAW)	All plants	Cracking (SCC, IASCC) Aging management (IE)	W4. Lower girth weld (LGW)	Enhanced visual (EVT-1) examination. Reinspection every 10 years following initial inspection.	100% of the accessible weld length of the OD of the MAW and LAW and 0.75 in. (1.91 cm) of adjacent base metal shall be examined (Notes 5 and 6). See Figure 4-13.
MRP-227 Revision 2 entries **Core Barrel Assembly** W4.2. Middle axial welds (MAW) and W4.3. Lower axial welds (LAW)	All plants	Cracking (SCC, IASCC) Aging management (IE)	W4. Lower girth weld (LGW)	Enhanced visual (EVT-1), volumetric (UT), or surface (ET) examination. Reinspection every 10 years following initial inspection (Note 3)	100% of the accessible weld length of the OD of the MAW and LAW and 0.75 in. (1.91 cm) of adjacent base metal shall be examined. Accessibility may be limited by the thermal shield or neutron pads, but removal of the thermal shield or neutron pads is not required. (Note 5). See Figure 4-32.

TABLE 4-6: Westinghouse plants Expansion items (continued)

Item	Applicability	Effect (Mechanism)	Primary Link	Exam. Meth./ Freq.	Exam. Coverage
MRP-227 Revision 1-A entries **Lower Support Assembly** W4.4. Lower support column bodies (both cast and non-cast)	All plants	Cracking (IASCC) Aging management (IE)	W4. Lower girth weld (LGW)	Visual (VT-3) examination. Reinspection every 10 years following initial inspection.	25% of the total number of column assemblies (both visible and nonvisible from above the lower core plate) using a VT-3 examination from above the lower core plate. The inspection coverage must be evenly distributed across the population of column assemblies (Notes 3 and 4). See Figure 4-23.
MRP-227 Revision 2 entries **Lower Support Assembly** W4.4. Lower support column bodies (both cast and non-cast)	Entry remains unchanged within MRP-227 Revision 2.				
MRP-227 Revision 1-A entries **Core Barrel Assembly** W6.1. Barrel-former bolts	All plants	Cracking (IASCC, fatigue) Aging management (IE, void swelling, and ISR)	W6. Baffle-former bolts (also refer to MRP 2018-002)	Volumetric (UT) examination. Reinspection every 10 years following initial inspection.	100% of accessible barrel-former bolts (minimum of 75% of the total population). Accessibility may be limited by presence of thermal shield or neutron pads. See Figure 4-21.

TABLE 4-6: Westinghouse plants Expansion items (continued)

Item	Applicability	Effect (Mechanism)	Primary Link	Exam. Meth./ Freq.	Exam. Coverage
MRP-227 Revision 2 entries					
Core Barrel Assembly W6.1. Barrel-former bolts	All plants	Cracking (IASCC, fatigue) Aging management (IE and ISR)	W6. Baffle-former bolts (secondary expansion of W6.2. Lower support column bolts)	Volumetric (UT) examination. Reinspection every 10 years following initial inspection.	100% of accessible barrel-former bolts (minimum of 75% of the total population). Accessibility may be limited by presence of thermal shield or neutron pads. Removal of thermal shield or neutron pads is not required. See Figure 4-40.
			W6. Baffle-former bolts (after large clusters of degraded baffle-former bolts are detected) (Note 8)	One-time visual (VT-3) examination of barrel-former bolts if large clusters of baffle-former bolts with unacceptable indications are observed	Visual (VT-3) examination: barrel-former-bolts adjacent to a large cluster of baffle-former bolts with unacceptable indications (Note 9). Accessibility may be limited by presence of thermal shield or neutron pads. Based on the known accessibility limitations, the accessibility of the barrel-former bolts adjacent to a large cluster of baffle-former bolts with unacceptable indications must be evaluated on a plant-specific case-by-case basis. Removal of thermal shield or neutron pads is not required. See Figure 4-40.

TABLE 4-6: Westinghouse plants Expansion items (continued)

Item	Applicability	Effect (Mechanism)	Primary Link	Exam. Meth./ Freq.	Exam. Coverage
MRP-227 Revision 1-A entries **Lower Support Assembly** W6.2. Lower support column bolts	All plants	Cracking (IASCC, fatigue) Aging management (IE and ISR)	W6. Baffle-former bolts	Volumetric (UT) examination. Reinspection every 10 years following initial inspection.	100% of accessible LSC bolts (minimum of 75% of the total population) or as supported by plant-specific justification. See Figure 4-22.
MRP-227 Revision 2 entries **Lower Support Assembly** W6.2. Lower support column bolts	Entry remains unchanged within MRP-227 Revision 2.				

MRP-227 Revision 1-A entries

Notes:

1. Examination acceptance criteria and expansion criteria for the Westinghouse components are in Table 5-3.
2. Examination coverage requires examination of either the ID or the OD of the weld.
3. The stated minimum coverage requirement is the minimum if no significant indications are found. However, the examination acceptance criteria in Section 5 require that additional coverage must be achieved in the same outage if significant flaws are found. This contingency should be considered for inspection planning purposes.
4. Justification that adequate distribution of the inspection coverage has been achieved can be based on geometric or layout arguments. Possible examples include, but are not limited to, inspection of all column assemblies in one quadrant of the lower core plate (based on the azimuthal symmetry of the plate) or inspecting every fourth column across the entire plate.
5. A minimum coverage of 75% of the weld length on the surface being examined shall be achieved; however, for welds with limited access (Note 6), a minimum examination coverage of 50% of the weld length on the surface being examined shall be achieved.
6. Accessibility to the MAW and LAW may be limited by the thermal shield or neutron panels—no disassembly to achieve higher weld length coverage is required.

TABLE 4-6: Westinghouse plants Expansion Items (continued)

MRP-227 Revision 2 entries

Notes:

1. The examination requirements detailed in this table may be replaced or modified by a plant implementing an alternate aging management strategy that addresses the aging degradation mechanisms within these guidelines, supported by a plant-specific technical justification. This may be necessary in cases such as bolt replacements or component modification. See Appendix C for additional details on performing such evaluations.
2. Examination acceptance criteria and expansion criteria for the Westinghouse components are in Table 5-3.
3. UT or ET examination of core barrel welds must be supported by a technical justification developed per MRP-228 [3].
4. Examination coverage requires examination of either the ID or the OD of the weld.
5. A minimum coverage of 75% of the weld length on the surface being examined shall be achieved; however, for welds with limited access (such as due to the thermal shield or neutron pads/panels), a minimum examination coverage of 50% of the weld length on the surface being examined shall be achieved.
6. The stated minimum coverage requirement is the minimum if no significant indications are found. However, the examination acceptance criteria in Section 5 require that additional coverage must be achieved in the same outage if significant flaws are found. This contingency should be considered for inspection planning purposes.
7. Justification that adequate distribution of the inspection coverage has been achieved can be based on geometric or layout arguments. Possible examples include, but are not limited to, inspection of all column assemblies in one quadrant of the lower core plate (based on the azimuthal symmetry of the plate) or inspecting every fourth column across the entire plate.
8. A large cluster of degraded baffle-former bolts is defined as any group of adjacent baffle-former-bolts at least 3 rows high by at least 10 columns wide, or at least 4 rows high by at least 6 columns wide where 80% or greater of the baffle-former-bolts have unacceptable UT indications or are visibly degraded [48].
9. The barrel-former bolts adjacent to the cluster include [48]:
   a. Barrel-former bolts in the same area as the cluster of baffle-former bolts with indications if that area is projected radially onto the core barrel
   b. Barrel-former bolts on the two rows above and the two rows below the projected area
   c. Barrel-former bolts on each of the two columns of bolts that are circumferentially adjacent to the projected area.
10. The entries in this table are applicable to Westinghouse-designed plants operating 40 to 80 years.

About EPRI

Founded in 1972, EPRI is the world's preeminent independent, non-profit energy research and development organization, with offices around the world. EPRI's trusted experts collaborate with more than 450 companies in 45 countries, driving innovation to ensure the public has clean, safe, reliable, affordable, and equitable access to electricity across the globe. Together, we are shaping the future of energy.

Programs:

Nuclear Power

Pressurized Water Reactor Materials Reliability Program

© 2021 Electric Power Research Institute (EPRI), Inc. All rights reserved. Electric Power Research Institute, EPRI, and TOGETHER...SHAPING THE FUTURE OF ENERGY are registered marks of the Electric Power Research Institute, Inc. in the U.S. and worldwide.

3002020105

EPRI
3420 Hillview Avenue, Palo Alto, California 94304-1338 • PO Box 10412, Palo Alto, California 94303-0813 USA
800.313.3774 • 650.855.2121 • askepri@epri.com • www.epri.com