NFS

NUCLEAR FUEL SERVICES, INC.

BOX 124 · WEST VALLEY, N.Y. 14171
AREA CODE 716 TELEPHONE 942-3235

August 13, 1971

RECEIVED
AUG 13 1971
U.S. ATOMIC ENERGY COMMISSION

Mr. R. E. Cunningham, Acting Director
Division of Materials Licensing
United States Atomic Energy Commission
Washington, D. C. 20545

Dear Mr. Cunningham:

Pursuant to Paragraph 50.59 of Title 10 Code of Federal Regulations, Nuclear Fuel Services, Inc. hereby requests a change in Technical Specifications for Operating License CSF-1. The proposed changes will permit the NFS Processing Plant at West Valley, New York to transfer to process and process plutonium nitrate-uranyl nitrate solutions such as now being prepared at the NFS facility at Erwin, Tennessee. The Division of Material Licensing previously approved receipt and storage of such material by Change No. 14 of the Technical Specifications of License CSF-1. The safety evaluation of the proposed processing plan and the proposed changes to the Technical Specifications are attached.

NFS believes that these changes do not contain any significant safety consideration not described or implicit in the Final Safety Analysis Report submitted under Docket 50-201; therefore, authorization of the changes is requested.

Very truly yours,

J. P. Duckworth
Plant Manager

JPD:cp

Attachments

cc: E. D. North
D. H. Shafer
B. G. Bechhoefer

Page withheld as containing

Export Controlled Information

Page withheld as containing

Export Controlled Information

Page withheld as containing

Export Controlled Information

Page withheld as containing

Export Controlled Information

PROPOSED CHANGES TO TECHNICAL SPECIFICATIONS
FOR PROCESSING CATEGORY 10 FUELS

1. Add the following to Specification 4.4:

   "4.4.4 For category 10 fuels, transfers to the dissolvers shall be controlled so that the resultant U-235 equivalent concentration in a dissolver shall not exceed the concentrations shown in Figure 4.4.1."

2. Modify the terminology of Figure 4.4.1 so that a) the ordinate reads "Maximum Allowable U-235 Equivalent Concentration, grams per liter" and b) the abscissa reads "Weight Percent Fissile Isotopes in Mixture of Fissile and Fertile Isotopes".

3. Modify the terminology of Specification 4.5.1 to

   "The concentration of fissile isotopes in the feed adjustment and accountability tank shall not exceed, after adjustment, the U-235 equivalent concentration shown in Figure 4.5.1, based upon either the fuel enrichment prior to irradiation or the fuel enrichment determined by analysis prior to adjustment, except that . . ."

4. Modify the terminology of Figure 4.5.1 so that a) the ordinate reads "Maximum Allowable U-235 Equivalent Concentration, grams per liter" and b) the abscissa reads "Weight Percent Fissile Isotopes in Mixture of Fissile and Fertile Isotopes".

5. Remove the last sentence of the first paragraph of the Bases of Specification 4.5.

Page withheld as containing

Export Controlled Information

b) Transient and Accident Conditions

The effects of transient conditions in solvent extraction columns on nuclear criticality safety should be analyzed, and special procedures for the prevention of transient conditions should be described. The analysis should also determine the effects of transient process upsets on the safety of related systems such as solvent clean up or waste handling.

An analysis should be made to determine whether the effects of a maximum accident when processing plutonium solutions will exceed the effects of maximum accidents considered in the FSAR.

Descriptions of the above analyses should be provided in sufficient detail to enable the staff to assess their validity. A summary of the results obtained should be included in your submission.

3. Licensing of Operators

Licenses presently held by operators at NFS do not permit processing Category 10 material, therefore, NFS should submit a request for amendment of the licenses of those operators who will be involved in the campaign. This request should be supported by information to 1) identify special operator training needed for the plutonium processing campaign, 2) describe the operator training program to be used and 3) confirm that operators will be trained and tested to demonstrate their understanding of all pertinent aspects of the plutonium processing campaign.

The above comments are of a general nature. There may be more specific questions after receipt of the more detailed information.

Our review of your request for authorization to process plutonium nitrate-uranyl nitrate solutions will be resumed after we receive the information requested above.

Sincerely,

R. B. Chitwood, Chief
Irradiated Fuels Branch
Division of Materials Licensing

cc: B. G. Bechhoefer
J. Cline, ASDA
S. K. Breslauer, ASDA
R. N. Miller, NFS
E. D. North, NFS

RECEIVED
AUG 30 1971
J. P. DUCKWORTH

Page withheld as containing

Export Controlled Information

20-201

File Plant Op etc

NFS

NUCLEAR FUEL SERVICES, INC.

BOX 124 ··· WEST VALLEY, N.Y. 14171
AREA CODE 716 TELEPHONE 942-3235

October 15, 1971

R. B. Chitwood, Chief
Irradiated Fuels Branch
Division of Materials Licensing
United States Atomic Energy Commission
Washington, D.C. 20545

Dear Mr. Chitwood:

The attached information modifies and expands our submission of August 13, 1971, which requested authorization for 1) the transfer to inprocess storage and 2) the processing by solvent extraction of plutonium nitrate-uranyl nitrate solutions. A request for modification of the operator licenses has been forwarded under separate cover.

Your earliest possible review is requested. Members of the West Valley Staff will be available whenever desired, for conferences with the personnel of the Irradiated Fuels Branch.

Very truly yours,

J. P. Duckworth
Plant Manager

JPD:ps

Attachments

cc: E. D. North (Rockville)
D. H. Shafer (ASDA)
B. G. Bechhoefer

Page withheld as containing

Export Controlled Information

Page withheld as containing

Export Controlled Information

Page withheld as containing

Export Controlled Information

Page withheld as containing

Export Controlled Information

Page withheld as containing

Export Controlled Information

Page withheld as containing

Export Controlled Information

Page withheld as containing

Export Controlled Information

Page withheld as containing

Export Controlled Information

Page withheld as containing

Export Controlled Information

Page withheld as containing

Export Controlled Information

Page withheld as containing

Export Controlled Information

Page withheld as containing

Export Controlled Information

Page withheld as containing

Export Controlled Information

Page withheld as containing

Export Controlled Information

Page withheld as containing

Export Controlled Information

shielded by 5'-9" of concrete. Gaseous activity might well be discharged from the stack in excess of Paragraph 4.1. This possibility has been analyzed in paragraphs 7.30-7.32 and 8.24-8.28 of the Safety Analysis and it has been shown that even in the event such a critical incident were to occur, there would not be injury to either plant personnel or the general public.

If this specification is found to be exceeded, no further fissionable material will be added to the rework system until the situation is corrected; and the remedial action must be taken immediately.

Page withheld as containing

Export Controlled Information

Page withheld as containing

Export Controlled Information

Page withheld as containing

Export Controlled Information

Page withheld as containing

Export Controlled Information

We will continue our review of your request for authorization to process plutonium nitrate-uranyl nitrate solutions when the above information is received.

Sincerely,

R. B. Chitwood, Chief
Irradiated Fuels Branch
Division of Materials Licensing

RECEIVED
NOV 3 1971
J. P. DUCKWORTH

50-201

NFS

NUCLEAR FUEL SERVICES, INC.

BOX 124 · WEST VALLEY, N.Y. 14171
AREA CODE 716 TELEPHONE 942-3235

October 29, 1971

R. B. Chitwood, Chief
Irradiated Fuels Branch
Division of Materials Licensing
United States Atomic Energy Commission
Washington, D.C.

Dear Mr. Chitwood:

During discussions between members of the Irradiated Fuels Branch and J. R. Clark, Technical Services Manager of West Valley Processing Plant, several specific questions were presented concerning our application to process Category 10 fuels. We are hereby presenting information in response to these questions and to supplement our submissions of August 13 and October 15, 1971.

Very truly yours,

J. P. Duckworth
Plant Manager

JPD:ps

Attch.

cc: E. D. North
D. H. Shafer
B. G. Bechhoefer

RECEIVED
NOV 3 1971
U.S. ATOMIC ENERGY COMMISSION
Regulatory
Mail Section

4734

Page withheld as containing

Export Controlled Information

Page withheld as unreviewed potentially containing Export Controlled Information

Page withheld as unreviewed potentially containing Export Controlled Information

Page withheld as containing

Export Controlled Information

Page withheld as containing

Export Controlled Information

Page withheld as containing

Export Controlled Information

Page withheld as containing

Export Controlled Information

Page withheld as containing

Export Controlled Information

Page withheld as containing

Export Controlled Information

Page withheld as containing

Export Controlled Information

Page withheld as containing

Export Controlled Information

50-201

NFS

NUCLEAR FUEL SERVICES, INC.

File Plant & + Proposed T Sp

BOX 124 · WEST VALLEY, N.Y. 14171
AREA CODE 716 TELEPHONE 942-3235

Distrib 1/17/72
DEC
BRH
PSC
DOL

November 12, 1971

R. B. Chitwood, Chief
Irradiated Fuels Branch
Division of Materials Licensing
United States Atomic Energy Commission
Washington, D.C. 20545

Dear Mr. Chitwood:

The attached proposed Technical Specifications for Category 10 fuel are submitted in response to discussions between members of the Irradiated Fuels Branch and Mr. J.R. Clark, Technical Services Manager of the West Valley Processing Plant. These specifications utilize the recommendations and the plutonium data of ORNL-TM-686.

Your earliest possible review is requested. Members of the West Valley Staff will be available whenever desired, for conferences with the personnel of the Irradiated Fuel Branch.

Very truly yours,

J. P. Duckworth
Plant Manager

JPD:ps
Attch.

cc: E. D. North (Rockville)
D. H. Shafer (ASDA)
B. G. Bechhoefer

RECEIVED
NOV 15 1971
U.S. ATOMIC ENERGY COMMISSION
Secretary
Mail Section

Page withheld as containing

Export Controlled Information

Page withheld as containing

Export Controlled Information

Page withheld as containing

Export Controlled Information

If this specification is found to be exceeded, no further fissionable materials will be added to the rework system until the situation is corrected; and the remedial action must be taken immediately.

Page withheld as containing

Export Controlled Information

Nuclear Fuel Services, Inc. 6000 Executive Boulevard, Suite 600, Rockville, Maryland • 208
A Subsidiary of Getty Oil Company (301) 424-17

AEC
Correspondence File
111688

December 1, 1971

Mr. Seymour H. Smiley, Director
Division of Materials Licensing
United States Atomic Energy Commission
Washington, D. C. 20545

Dear Mr. Smiley:

In response to your request during the meeting on November 24, 1971, attached are three reports covering the subjects of: 1) an investigation of sources of activity into the Low Level Liquid Waste System; 2) the management of low level liquid effluent during the SEFOR campaign at NFS, West Valley Plant; and 3) a summation and status report of the operation of the Low Level Waste Treatment Facility, along with future plans.

It is hoped that this material answers the concerns expressed in these areas, so that approval of the license amendment for the processing of SEFOR scrap material may be issued. Because of existing contractual commitments, your prompt review of this material would be appreciated.

Very truly yours,

W H Lewis

W. H. Lewis
Vice President

WHL:kac

Enclosures

INVESTIGATION OF SOURCES OF STRONTIUM ACTIVITY TO THE INTERCEPTORS

The technology available at the time of the design of the West Valley Reprocessing Plant indicated that Sr^{90} isotope would not be a significant contributor in the activity discharged via the low level liquid effluent system. Historically, the Sr^{90} activity has increased in the effluents, but a continuing effort on the part of NFS has kept the amount discharged to the environment to well below the allowable level. Periodically, spot evaluations of most probable sources for the strontium were conducted but these failed to verify the principal sources. In November of 1970, as part of its continuing effort to reduce the amount of radioactivity released to the environment, NFS initiated an extensive investigation to determine the sources of Sr^{90} to the low level liquid waste interceptors.

Drain Sampling Program

All drains and streams connected with the low level waste water system were identified, evaluated and sampled according to the systematic program outlined below:

Phase I - Shutdown of all drains to the interceptors. Sample and analyze any flows noted.

Phase II - General sampling of plant drains while plant is 'down', i.e. not processing.

Phase III - General sampling of plant drains while plant is processing.

Phase IV - Installation of sample taps, if necessary, on exposed drain headers within the plant.

Analytical results of the samples taken are tabulated on the attached Sample Analysis Log. A general drainage diagram of the plant and a Table identifying plant area designations have also been included in this report.

The program was begun on 11/10/70 and the first 3 phases of the investigation took place over a period of nearly 3 months. On 1/25/71, the drain sampling program was concluded with a second shutdown of flows to the interceptors. Phase IV, the installation of sample taps on drainage headers, was not necessary because the sampling program was successful in locating the Sr^{90} sources in the plant which contributed to interceptor activity.

Some difficulties were experienced during this program due to the nature of the interceptor drainage system. The wide variations in flow rates of contributing streams as well as fluctuations in the radioisotope concentration made an absolute material balance difficult. Radioactivity of the streams has been estimated from the analytical results of specific samples which are considered to be representative. Variations in the analytical results from different laboratories were noted, but later resolved in the course of the investigation.

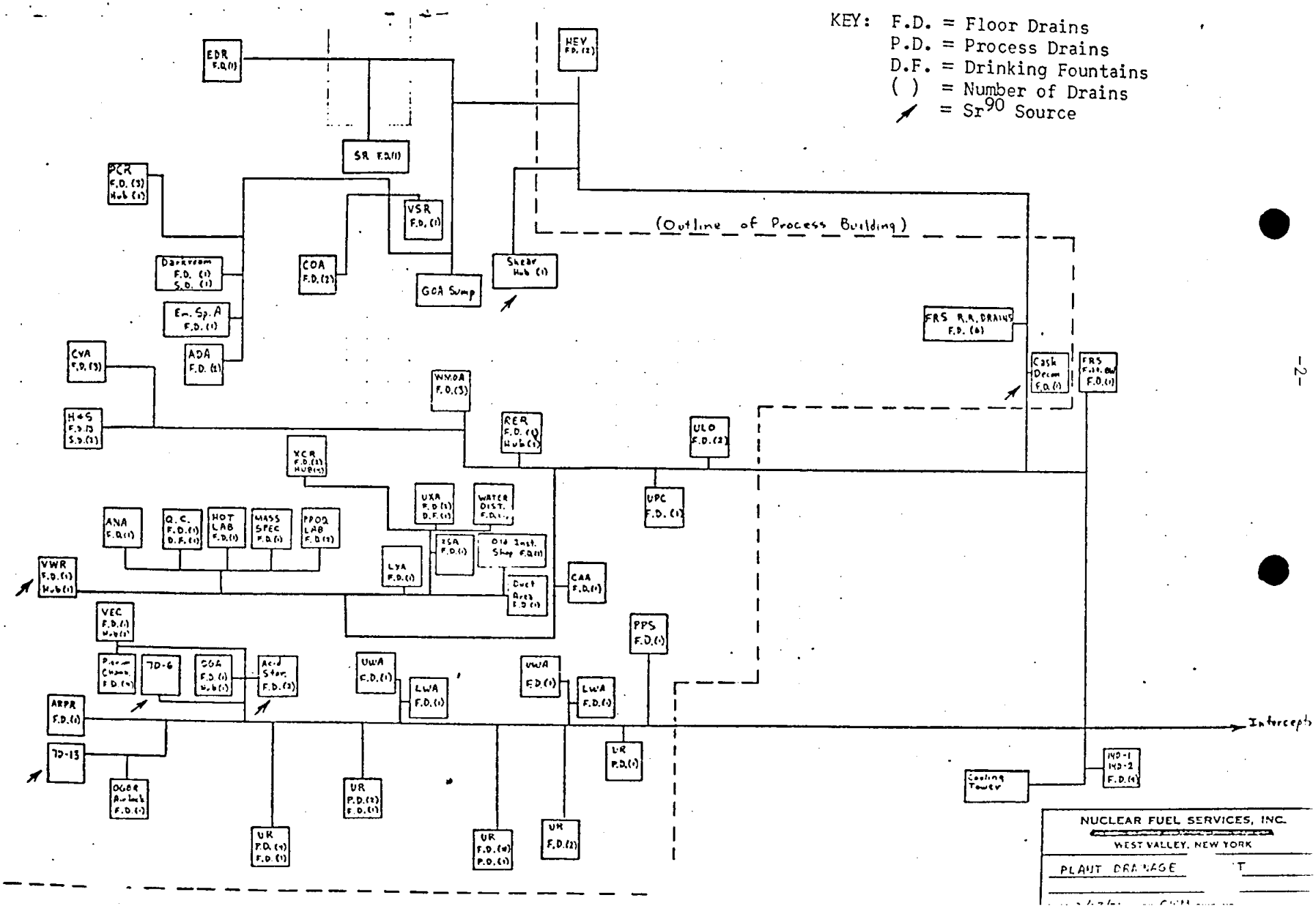
KEY: F.D. = Floor Drains
P.D. = Process Drains
D.F. = Drinking Fountains
( ) = Number of Drains
= Sr90 Source
(Outline of Process Building)
EDR F.D.(1)
HEV F.D.(2)
SR F.D.(1)
PCR F.D. (3) Hub (1)
VSR F.D. (1)
Darkroom F.D. (1) S.D. (1)
COA F.D.(2)
GOA Sump
Sheer Hub (1)
Em. Sp. A F.D. (1)
ADA F.D. (1)
FRS R.R. DRAINS F.D. (6)
CVA F.D. (3)
Cask Decon F.D. (1)
FRS F.D. (1)
WMOA F.D. (3)
H4S F.D. (3) S.D. (1)
RER F.D. (1) Hub (1)
ULO F.D. (2)
XCR F.D. (1) Hub (1)
UXR F.D. (1) D.F. (1)
WATER DIST. F.D.
UPC F.D. (1)
ANA F.D. (1)
Q.C. F.D. (1) D.F. (1)
HOT LAB F.D. (1)
MASS SPEC F.D. (1)
FOOD LAB F.D. (1)
XSA F.D. (1)
Old Inst. Shop F.D. (1)
LYA F.D. (1)
VWR F.D. (1) Hub (1)
Duct Area F.D. (1)
CAA F.D. (1)
VEC F.D. (1) Hub (1)
PPS F.D. (1)
Process Chem. F.D. (1)
TD-6
OGA F.D. (1) Hub (1)
Acid Stor. F.D. (2)
UWA F.D. (1)
LWA F.D. (1)
UWA F.D. (1)
LWA F.D. (1)
ARPR F.D. (1)
TD-13
OGBR Airlock F.D. (1)
UR F.D. (1)
UR F.D. (2) F.D. (1)
UR F.D. (1) F.D. (1)
UR F.D. (2)
UR F.D. (1)
Intercepts
Cooling Tower
IND-1 IND-2 F.D. (4)
NUCLEAR FUEL SERVICES, INC.
WEST VALLEY, NEW YORK
PLANT DRAINAGE

Plant Area Designation

ANA	Analytical Aisle
ANC	Analytical Cells
ARC	Acid Recovery Cell
ARPR	Acid Recovery Pump Room
CCR	CPC Crane Room
COA	Chemical Operating Aisle
CPC	Chemical Process Cell
CR	Control Room
CUP	Cask Unloading Pool
CVA	Chemical Viewing Aisle
EDR	Equipment Decontamination Room
FRS	Fuel Receiving and Storage
GPA	GPC-MC Operating Aisle
GPC	General Purpose Cell
GCR	GPC Crane Room
HAC	Hot Acid Cell
INT	Interceptor
LAB	Laboratories
LWC	Liquid Waste Cell
LWA	Lower Warm Aisle
LXA	Lower Extraction Aisle
MC	Miniature Cell
MCR	PMC Crane Room
MOA	Mechanical Operating Aisle
MS	Maintenance Shop
OFF	Office Building
OGA	OGC-ARC Operating Aisle
OGBR	Off-Gas Blower Room
OGC	Off-Gas Cell
PCR	Process Chemical Room
PEA	Pulse Equipment Aisle
PMC	Process Mechanical Cell
PMRA	Power Manipulator Repair Area
PPC	Product Purification Cell
PPS	Product Packaging and Shipping
RER	Ram Equipment Room
SL	Storage Lagoon
SR	Scrap Removal Room
SSC	Sample Storage Cell
SST	Solvent Storage Tanks
UPC	Uranium Product Cell
UR	Utility Room
UWA	Upper Warm Aisle
UXA	Upper Extraction Aisle
VEC	Ventilation Exhaust Cell
VSR	Ventilation Supply Room
VWR	Ventilation Wash Room
WBA	Waste Burial Area
WHSE	Warehouse
WTF	Waste Tank Farm
XC1	Extraction Cell #1
XC2	Extraction Cell #2
XC3	Extraction Cell #3
XCR	Extraction Chemical Room
XSA	Extraction Sample Aisle

Drain Shutdown Flows

After Phase I of the strontium investigation was carried out, the investigation proceeded under the assumption that there was an 'unknown' stream coming from somewhere within the plant which contained the bulk of the Sr^{90}. This was based on the fact that during the first drain shutdown of 11/13/70, a continued flow of approximately 8 gpm was noted. A sample of this stream showed a Sr^{90} activity of 1×10^{-3} μCi/ml. The major portion of the continued flow to the interceptors was eventually traced to a leak in a cooling water header in the UWA. In addition, approximately 1 gpm was attributed to condensate traps and pump packing leakage. The radioactivity in the sample came from contaminated drainage lines, caused by a previous spillage of high activity liquid. A follow-up investigation into the plant activities around this time showed that six hours preceding the drain shutdown, a ventilation washer equipment failure occurred which resulted in the release of high activity liquid to the interceptors. Due to this spill, the interceptor influent peaked at 0200, 11/13/70. As the contaminated drain lines washed out, the interceptor influent activity gradually dropped over the next few hours, but was still 8.4×10^{-3} μCi/ml gross β, 15 minutes before the drain shutdown. The sample which was taken of the 'unknown' stream during the shutdown had a gross β activity of 8.6×10^{-3}.

A second plant drain shutdown, conducted on 1/25/71, verified that no unexplainable or unchecked activity source existed within the plant. During this second shutdown a continued flow of about 6 gpm was noted. A sample of this stream showed an activity of 1.49×10^{-3} Ci/ml gross . About 2 gpm was due to the shear gland water which was left running. An inspection of the utility room showed about 3 gpm running into the various drains and another 1 gpm was attributed to other condensate traps and gland water leaks throughout the plant. The activity in this sample was due to the shear gland water and washing out of the common drain line which the utility room and 7D-6 share. The pH of this flow sample was about 2.0. There was no evidence of any further source of waste water activity during this shutdown.

Sr^{90} Sources

After a thorough investigation of the NFS drainage system, analysis of the samples taken from various parts of the plant (during processing and while down) shows that the Sr^{90} present in the low level waste water comes essentially from six sources within the plant; three continuous sources and three intermittent sources.

Continuous sources:

1. 7D-6 Acid Recovery System Overheads
2. Shear gland water
3. 7D-13 General Purpose Evaporator Overheads

Intermittent sources:

1. Ventilation Washer Room (VWR)
2. Acid recovery system leakage
3. Cask decontamination pit (cask coolant)

Table I shows a balance on Sr^{90} to the interceptors based on typical samples and flows. Flow rates and concentrations will, of course, vary widely depending

on plant conditions. The table shows 7D-6 to be the predominant Sr^{90} source on a continuous basis, although at a given period of time, an intermittent source may dominate the strontium contributions to the interceptors. All three intermittent sources mentioned above have been known to release spikes of activity to the interceptors in the past. The acid recovery system in particular, has a large quantity of Sr^{90} associated with it as can be seen from the 7D-3 (acid recovery feed), 7D-5 (recovered acid for dissolution) and 7D-6 sample results.

Corrective Action

Two Sr^{90} sources, one continuous and one intermittent have already been eliminated from the interceptor flow. The shear gland water and the VWR drains have been permanently rerouted into the PMC to be taken into the hot waste system. The acid recovery system, which includes 7D-6, has been identified as the major source, contributing 80 to 85% of the Sr^{90} to the low level waste system. A new waste evaporation and acid recovery system has been under design and construction since 1968 and will be operational in 1972. When completed, these modifications to the West Valley plant will eliminate up to 95% of these Sr^{90} releases.

TABLE I

Sr^{90} Released to Interceptors

	Typical Flow Rate (Gallons/day)	Typical Sr^{90} Activity (uCi/ml)	Sr^{90} Release (uCi/day)	Percent of Total
7D-6	12,000	4.0×10^{-4}	18,200	80
Outer Shear Gland	2,800	2.5×10^{-4}	2,650	12
7D-13	2,500	7.2×10^{-5}	680	3
Inner Shear Gland	120	4.0×10^{-4}	180	.8
Intermittent Source (Example postulated represents the small amount of 7D-5 leak or spill necessary to balance Sr^{90} concentration at interceptors)	11	2.4×10^{-2}	990	4.2
Cold streams-Interceptors streams of negligible Sr^{90} concentration. (Steam condensate, cooling water, plant water, etc.)	42,569	-	-	-
Interceptor Total	60,000	1.0×10^{-4}	22,700	100%

STRONTIUM INVESTIGATION ANALYSIS LOG

111695

Sample	Date*	Comments	Laboratory	Activity (μCi/ml) Gross β	Sr^{90}	Cs^{137}	Other
Interceptor	11/13	All known streams off. Plant down. Flow ≈8 gpm	NFS-H&S	8.63×10^{-3}	-	-	H^3-1.25×10^{-3}
			NFS-ANA	-	-	1.73×10^{-3}	$CePr^{144}$-6.17×10^{-3} $RuRh^{106}$-2.15×10^{-3} $ZrNb^{95}$-9.44×10^{-4} Cs^{134}-1.58×10^{-4}
			Isotopes,Inc.	1.13×10^{-2}	1.18×10^{-3}	2.24×10^{-3}	
			Eberline	6.00×10^{-3}	2.20×10^{-3}	1.90×10^{-4}	
Interceptor (Daily Composite)	12/15	Plant operation normal. Fuel being processed. Flow ≈ 50 gpm	NFS-H&S	1.98×10^{-3}	-	-	H^3-2.14×10^{-2}
			NFS-ANA	3.05×10^{-3}	-	-	(Activity too low for spectrum)
			Isotopes,Inc.	3.14×10^{-3}	2.97×10^{-4}	5.37×10^{-4}	
Interceptor Influent	1/25/71	Interceptor shut down Flow 6 gpm	NFS-H&S	1.49×10^{-3}			
VWR	11/10	Plant down. Sample taken during VWR decontamination.	NFS-H&S	3.91	-	-	
			NFS-ANA	4.96	-	6.42×10^{-1}	$RuRh^{106}$-7.48 Cs^{134}- 1.63×10^{-1} $CePr^{144}$-5.64×10^{-1}
			Isotopes,Inc.	2.86	3.10×10^{-2}	1.33	
VWR	11/13	Plant down. Sample taken during VWR decontamination.	NFS-H&S	25.7	-	-	
			NFS-ANA	46.5	-	6.42×10^{-1}	$RuRh^{106}$-54.9 Cs^{134}-1.53×10^{-1} $ZrNb^{95}$- 4.92×10^{-1} $CePr^{144}$<5.00×10^{-1}
			Isotopes, Inc.	6.13	8.07×10^{-3}	2.36×10^{-1}	
X-2 Coolant	11/16	Cask carrying PG&E fuel.	NFS-H&S	3.29×10^{-1}	-	-	
			NFS-ANA	3.05	-	-	Zn^{65}-5.57 Mn^{54}-1.78 Co^{60}-1.02 $CePr^{144}$-7.20×10^{-1}
			Isotopes,Inc.	1.66	2.50×10^{-2}	8.12×10^{-2}	

*1970 unless [illegible]

111696

Sample	Date	Comments	Laboratory	Activity (μCi/ml) Gross β	Sr^{90}	Cs^{137}	Other
7D-5	8/25	Plant operation normal.	Isotopes, Inc.	8.0×10^{-1}	5.1×10^{-4}	-	
	11/23	Plant down	NFS-H&S	6.53×10^{-1}	-	-	
	2/17/71	Plant down-flushout	Isotopes, Inc.	1.54	2.4×10^{-2}		
EDR Pit	11/20		NFS-H&S	2.45×10^{-2}	-	-	
			Isotopes, Inc.	1.64×10^{-2}	3.43×10^{-3}	2.90×10^{-3}	
FRS Pool	9/17		Isotopes, Inc.	2.46×10^{-2}	5.44×10^{-6}	1.4×10^{-2}	
	11/23		NFS-H&S	2.54×10^{-2}	-	-	
	12/3		NFS-ANA	1.4×10^{-2}	-	1.93×10^{-2}	Cs^{134}-3.6×10^{-3} Co^{60}-1.8×10^{-3}
Shear Gland	11/20	Shear inactive	NFS-H&S	2.94×10^{-2}	-	-	
			Isotopes, Inc.	2.08×10^{-2}	3.40×10^{-3}	2.84×10^{-3}	
Shear (Inner Gland)	12/22	Shear active. (Sample not filtered)	NFS-H&S	6.5×10^{-1}	-	-	
	12/29	Shear inactive.	NFS-H&S	1.59×10^{-3}	-	-	
			NFS-ANA	5.41×10^{-3}	-	1.1×10^{-3}	$CePr^{144}$-3.5×10^{-3} Cs^{134}-4.0×10^{-4} $RuRh^{106}$-8.0×10^{-4}
			Isotopes, Inc.	9.68×10^{-4}	4.01×10^{-4}	3.22×10^{-4}	
Shear (Outer Gland)	12/22	Shear active. (Sample not filtered)	NFS-H&S	1.80×10^{-2}	-	-	
	12/29	Shear inactive.	NFS-H&S	1.51×10^{-3}	-	-	
			NFS-ANA	1.70×10^{-3}	-	4.56×10^{-4}	$CePr^{144}$-8.83×10^{-5} $ZrNb^{95}$-2.13×10^{-4} $RuRh^{106}$-1.62×10^{-4}
			Isotopes, Inc.	1.39×10^{-3}	2.53×10^{-4}	7.69×10^{-4}	

111697

Sample	Date	Comments	Laboratory	Activity (μCi/ml) Gross β	Sr^{90}	Cs^{137}	Other
7D-6	8/19	Plant operation normal.	Isotopes, Inc.	2.74×10^{-2}	4.30×10^{-7}	-	
	12/15	Plant operation normal	NFS-H&S	2.37×10^{-2}	-	-	H^3-2.38×10^{-1}
			NFS-ANA	1.10×10^{-1}	-	3.48×10^{-4}	$RuRh^{106}$-5.37×10^{-2} $ZrNb^{95}$-4.22×10^{-4} Cs^{134}-3.04×10^{-5}
			Isotopes, Inc.	4.19×10^{-2}	4.00×10^{-4}	3.71×10^{-6}	
	2/17/71	Plant down-flushout	Isotopes, Inc.	4.33×10^{-1}	4.8×10^{-4}		
7D-13	11/12	8D-6 material	NFS-H&S	1.46×10^{-4}	-	-	
	11/25	8D-6 material	Isotopes, Inc.	6.94×10^{-5}	3.69×10^{-6}	1.38×10^{-5}	
	12/15	8D-6 material	NFS-H&S	1.67×10^{-3}	-	-	H^3-3.2×10^{-2}
			NFS-ANA	2.97×10^{-3}	-	2.15×10^{-5}	$RuRh^{106}$-2.08×10^{-3} $ZrNb^{95}$-2.09×10^{-5} $CePr^{144}$-2.68×10^{-4} Cs^{134}<1.42×10^{-5}
			Isotopes, Inc.	1.61×10^{-3}	7.21×10^{-5}	5.99×10^{-5}	
SR	9/20		Isotopes, Inc.	4.00×10^{-3}	4.6×10^{-5}	7.4×10^{-5}	
	11/20		NFS-H&S	7.90×10^{-5}	-	-	
			Isotopes, Inc.	8.30×10^{-5}	1.63×10^{-6}	2.89×10^{-6}	
	12/17		NFS-H&S	3.70×10^{-4}	-	-	
FRS Decon Pit	12/17		NFS-H&S	9.14×10^{-4}	-	-	
FRS R.R. Drain	12/17		NFS-H&S	6.60×10^{-5}	-	-	
Ram Gland	11/20	Plant down.	NFS-H&S	4.31×10^{-5}	-	-	
			Isotopes, Inc.	3.21×10^{-5}	5.86×10^{-6}	1.32×10^{-5}	

111698
1/21/71

Sample	Date	Comments	Laboratory	Activity (μCi/ml) Gross β	Sr^{90}	Cs^{137}	Other
UWA Drain	12/15	Plant operation normal.	NFS-H&S	4.26×10^{-5}	-	-	No detectable alpha activity
			NFS-ANA	3.37×10^{-4}	-	-	
			Isotopes, Inc.	3.91×10^{-6}	2.23×10^{-7}	3.97×10^{-7}	
Water Distiller	11/20		NFS-H&S	9.86×10^{-5}	-	-	
			Isotopes, Inc.	6.19×10^{-5}	2.3×10^{-5}	9.85×10^{-6}	
ADA-South	11/20		NFS-H&S	4.39×10^{-5}	-	-	
ADA-North	11/20		NFS-H&S	9.77×10^{-5}	-	-	
Laundry	11/20		NFS-H&S	1.01×10^{-5}	-	-	
			Isotopes, Inc.	5.34×10^{-5}	1.88×10^{-7}	9.52×10^{-7}	
	12/15		NFS-H&S	6.24×10^{-6}	-	-	
VSR	11/20		NFS-H&S	2.95×10^{-6}	-	-	
			Isotopes, Inc.	6.99×10^{-7}	2.35×10^{-7}	2.89×10^{-7}	
	12/15		NFS-H&S	2.75×10^{-6}	-	-	
Cooling Water	11/18	Plant down.	NFS-H&S	8.27×10^{-6}	-	-	
Condensate R.	11/18	Plant down.	NFS-H&S	1.99×10^{-5}	-	-	
	12/17	Plant operation normal.	NFS-H&S	8.01×10^{-6}	-	-	
WTF Steam Condensate	11/19	8D-2 heat exchanger operating	NFS-H&S	3.48×10^{-6}	-	-	
Raw Water	11/13	From supply lakes	Isotopes, Inc.	5.55×10^{-8}	2.07×10^{-8}	4.75×10^{-8}	

MANAGEMENT OF LOW LEVEL LIQUID EFFLUENT DURING THE "SEFOR" CAMPAIGN AT NFS WEST VALLEY PLANT

The operations and processing of the NFS West Valley Plant during the SEFOR rework period with relation to the low level liquid effluent will not be routine, since no virgin fission product activity will be introduced from the Chemical operation. SEFOR scrap is a mixture of U and Pu oxides from fuel rod production at the NFS Erwin Plant. By contract, the Pu is to be reseparated for return to the AEC. There are no fission products present in the material. Thus, there is essentially no β or γ radio-activity present in the scrap.

The SEFOR Pu is to be separated without inventory co-mixing. To achieve this, the plant has to be thoroughly flushed to minimize the Pu holdup. This flushing also transfers the bulk quantities of fission products present in normal inventory to High Level Waste Storage. It is planned to rework the SEFOR scrap on a dilute flowsheet as submitted to the AEC-DML for approval on 10/15/71. This flowsheet, under equilibrium conditions will generate 45 gpm of effluent to the low level liquid waste system. It is expected that due to the flushing nature of this operation, the residual activity in the process effluent will decrease with time. Therefore, the SEFOR rework operation is considered as a beneficial operation with regard to purging the plant and reducing the quantity of process activity discharged to the low level liquid effluent system.

During the period of time required to rework the SEFOR material, there will be other activities in progress which will contribute to the fission product input to the low level liquid effluent system. Examples of these are:

1) Discharge of contaminated liquids collected from solid waste burial operations as recommended by NYS Department of Environmental Conservation in a letter dated 12/30/70. These liquids have been retained in holding ponds awaiting completion of a new 1/4 mile transfer line on 11/15/71. Because of the start of the winter precipitation season, this liquid will have to be routed to the low level waste treatment system during the SEFOR campaign. It is estimated that there are 260,000 gallons containing one curie of β activity.

2) Return of encapsulated ruptured NPR fuel to the AEC. As part of the closeout of the AEC-NFS fuel reprocessing contract, several shipments of ruptured NPR fuel are to be made during the SEFOR campaign. These shipments require handling of the encapsulation cans in a special manner and loading and unloading shipping casks. These casks and the handling equipment have to be decontaminated to DOT limits before shipment. Therefore, decon and cleanup solutions will be generated, which because of the system design, will go to the Low Level Waste Treatment System.

The total volume and curies of fission products cannot be estimated at this time, but as in the past, the scheduling of operations will be such that regulations and limits are not normally approached.

3) Tie-ins of the new acid recovery, gas treatment and other revamp systems. Historically, the principal source of activity to the low level liquid effluent has been from the acid recovery system. To correct this, NFS has assigned priority one to replacing the present system with a new more efficient system. This work was started in 1968 and construction is 90% complete. In order to keep this work progressing, it is necessary to start to tie-in the new system so the old system can be abandoned. To do this, it is necessary to decon certain areas of the plant to as low a radiation level as possible in order that the exposure to the workers is minimized. Therefore, decon activities are scheduled during the SEFOR period. In addition to the continuous process effluent and batch decontamination volumes from auxiliary operations, there are over 5 million gallons of low level effluent that have accumulated in the surge lagoons during the exceptionally dry summer and fall of this year. These solutions will have to be released at a controlled rate governed by the flow in the Cattaraugus Creek. This is how the low level liquid waste effluent system was designed and operated in order to meet the peak as well as annual concentration limits established for the Cattaraugus Creek.

The management of the low level liquid waste effluents during the SEFOR rework period will require, as it has in the past, a control of the various effluent sources to insure that the overall release is in conformance to Federal Regulations and Technical Specifications. During the SEFOR processing the Low Level Waste Treatment Plant will be operated to process current generated waste plus some of the inventory of low level waste presently stored in the Lagoons 2 and 3. Specifically, we propose to control the release to the environ such that:

1) The concentration of CS-137 in the liquid waste at the point of release from the lagoon system should not exceed 2×10^{-5} μCi/ml.

2) The concentration of radioactivity in the Cattaraugus Creek should not exceed either:

   a) Ten percent (10%) of the prorated concentrations listed in Appendix B, Table II, 10 CFR Part 20 averaged over the SEFOR processing period; or

   b) Twenty percent (20%) of the prorated concentrations listed in Appendix B, Table II, 10 CFR 20 for any weekly composite sample taken during the SEFOR processing period in accordance with Technical Specification 5.1.1.

3) If the radioactive concentrations exceeds either 1) or 2) above, then NFS shall:

   a) Take such action as is necessary to come into prompt compliance.

   b) Make an investigation to identify the cause or causes for such levels of radioactivity.

   c) Define and initiate a program of action to reduce such levels, and

   d) Report these actions to the Commission on a timely basis.

Using these controls and based on plant experience, we would expect the Sr-90 concentration in the waste to be about 5×10^{-6} μc/ml. Therefore, under average conditions the concentration of Sr-90 in Cattaraugus Creek should average about two percent of MPC. Since the Low Level Waste Treatment Plant operation is controlled such that the maximum Cesium-137 concentration in the ion exchange effluent is about 2×10^{-5} μCi/ml, the average CS-137 concentration in the lagoon effluents will be much less.

Nuclear Fuel Services, Inc. 6000 Executive Boulevard, Suite 600, Rockville, Maryland • 20
A Subsidiary of Getty Oil Company (301) 424-

File
111680

December 8, 1971

Mr. Richard B. Chitwood, Chief
Irradiated Fuels Branch
United States Atomic Energy Commission
Washington, D. C. 20545

Dear Mr. Chitwood:

In response to your request of December 7, 1971, for a further amplification of future work to be performed in the area of improving the performance of the low level liquid waste system, attached is an addendum to our December 1, 1971, report describing the further efforts planned at this time.

Very truly yours,

W. H. Lewis
Vice President

WHL:kac

Enclosure

bcc: Messrs. Robert N. Miller
E. D. North
C. W. Taylor
J. P. Duckworth
J. R. Clark
B. G. Bechhoefer, Esquire
G. Anastis, New York State Atomic & Space Development Authority

LOW LEVEL LIQUID WASTES
FUTURE INVESTIGATIONS

1. Problem Areas

The low level liquid waste system has been in operation since late May, 1971. The goal of this operation is the removal of radioactive strontium and cesium from liquid effluents so that the liquid effluents will meet the requirements of 10 CFR 20, Appendix B, Table II. While the system has demonstrated the capability, and is currently removing some 95% of these materials, the radioactivity levels have not been reduced to the extremely low levels required to meet the goal: approximately one-quarter of MPC for each of four isotopes, Cs-134, Cs-137, Sr 89, and Sr-90.

The treatment system presently reduces Cs-137 to 6×10^{-6} µCi/ml or about one-third of MPC, and it reduces Sr-90 to about 5×10^{-6} µCi/ml or about 15 times MPC. Some fluctuation about these levels has been observed. The lowest weekly composite sample was analyzed at 2.5×10^{-7} µCi/ml for Sr-90. This represents 84% of MPC. It would appear that the system is reasonably close to the goal for cesium, but that additional time and work will be required to further reduce the strontium levels.

One of the primary problems that has been encountered has been the failure of the resins to withstand the nitric acid regeneration without degradation This problem was entirely unexpected in that the Oak Ridge National Laboratory work did not encounter this problem.

2. Approach to Solving the Problem

At the start of plant operations two separate problems were immediately encountered, a stability problem in the flocculator-clarifier, and a resin degradation problem in the ion-exchange beds. The former has apparently been resolved: the degradation problem is still with us.

The basic approach has been to first determine the cause of the degradation and to rectify the problem since without effective ion-exchange, the system cannot be expected to attain the extremely low levels of radioactivity desired. Once the degradation problem has been resolved, it will be possible to optimize the operation to achieve lower levels and/or to increase bed life, both of which are highly desirable. Other subsidiary areas of investigation pertain to the flow characteristics through the bed, channeling of the bed, the effect of physical swelling and shrinking of the bed during operation, the effect of additives to the flow, and the amount and type of clays to be used in the operation.

NFS has negotiated a contract with Battelle Northwest Laboratories to provide assistance in solving these problems. Preliminary information on the basis of the design of the facility and the design drawings has been furnished to Battelle. Dr. Earl Wheelwright of Battelle is scheduled to arrive at West Valley on December 13, 1971, for several days to provide assistance in the areas of non-ionic species, hydraulics, kinetics of reaction and the temperature dependence of the ion-exchange reaction.

Dr. John Holmes of Oak Ridge National Laboratory has been consulted frequently and a monthly review session has been arranged with him. Dr. Holmes has participated extensively in the Oak Ridge work on low level wastes and his assistance has been, and continues to be, extremely helpful.

NFS has had, and continues to have, extensive consultations with the resin manufacturer, Diamond-Shamrock Chemical Company, the only manufacture of the resin used in the Oak Ridge work. Diamond-Shamrock has kindly consented to prepare batches of the CS-100 resin used at Oak Ridge, even though this resin was discontinued as a commercial item some years ago due to the low demand for this resin.

3. Sampling Program

Two separate and differently oriented sampling programs have been set up.

The first is the routine sampling of the system effluents that is performed three times per day at about the following times:

0200 - gamma scan - cesium-137

1400 - pH, hardness, gross

1800 - gamma scan - cesium-137

With a five day life on the bed, this sampling program will provide 15 data points per bed for each cycle. At the same times other samples are taken throughout the system such as feed to the flocculator, feed to the filter and feed to the ion-exchange beds.

A second sampling program around a single ion-exchange bed is to be initiated with the change to sulfuric acid regeneration on the Cs-100 resin. It is planned to study closely the DF across the bed during the entire cycle. Samples of the feed and the effluent will be taken and analyzed each 24 hours beginning 12 hours after the bed goes on stream. These samples will be sent to an outside laboratory for cesium and strontium analyses to determine the DF over the cycle as well as the Cs to Sr ratio throughout the cycle.

4. Promising Areas of Investigation

The most promising area is in the effective regeneration of the resins without degrading their capacity for cesium and strontium. Nitric acid, even in the low concentrations used in the process, has an undeniable effect on the resins, both ARC-359 and Cs-100. Although the system was designed for nitric acid regeneration, based upon the Oak Ridge work, it has been possible to modify the system to handle dilute sulfuric acid in the regeneration cycle.

This will eliminate the oxidizing environment while providing good elution of the hardness and radioactivity on the beds. Laboratory tests at both West Valley and Erwin have not shown resin degradation upon exposure to sulfuric acid.

Due to the extensive use of stainless steel in the system, it is not feasible to shift to hydraulic acid for regeneration.

NFS has been adding stable strontium to the low level wastes since October 24, 1971, to isotopically reduce the concentration of radioactive strontium. Since the resin should not differentiate between the isotopes, and since the bed should reduce strontium to a given level, irrespective of the isotope involved, this should significantly reduce the level of radioactive strontium in the effluents.

Due to the lengthy time required for strontium analyses as well as the holdup in Lagoons 1 and 2, no data are presently available to indicate the effectiveness of this action.

NFS has been conducting experiments with a pilot plant sized bed in series with the main plant beds to determine the effect of adding a second ion-exchange bed in series with the main plant bed for cleanup purposes. Depending upon the results of these experiments coupled with a cost benefit analysis of results versus cost of installation, this approach may or may not be desirable.

Some preliminary work has been performed and further work is scheduled in the use of alternative adsorbents in the flocculator-clarifier and in the elution cycle. One adsorbent that appears promising is the natural zeolite, clinoptilolite This material can be used in conjunction with or substituted for the grundite clay used in the Oak Ridge work. This material could be used in the flocculator clarifier or it could be added to the hold tank used for collection of the eluant. In the latter location it could tie up the strontium and cesium eluted from the ion beds and reduce the load on the flocculator following regeneration.

This slurry would then be slowly fed to the flocculator to be centrifuged out with the normal sludge.

5. Alternatives

There are a limited number of alternative approaches to the resolution of this problem and several options that could be classified as alternatives or as adjuncts to the present system.

The alternative approaches were considered some two years ago and of these the present system was chosen as the most feasible for various reasons.

The most attractive alternative, of course, was the first choice, the deep well disposal of these effluents for which the site is particularly, and perhaps uniquely, well suited. While this approach was not acceptable under the original NFS application, it seems entirely appropriate to consider it in the present instance under the changed conditions where 94% of the long lived isotopes are being removed in the system. If the effluents from the present system were to be disposed of in the Potsdam-Theresa, the primary isotopes in the effluents would be ruthenium and tritium. The half lives of these materials are 1 year, and 12 years, respectively, thus the materials would decay away at a rapid rate and would not constitute a perpetual hazard. In view of the difficult, if not impossible, chemical recovery of these isotopes, the deep well disposal of low level liquid effluents deserves reconsideration. It is the only effective means of disposal of tritium and it presents a complete solution to the cleanup of the surface waters below the plant.

Other alternative solutions that were considered but not adopted were evaporation of the wastes, and chemical treatment by other methods. Evaporation is the most expensive in both capital and operating costs of all systems considered and the alternative chemical methods did not appear and had not been demonstrated to be very effective. All things considered, the best alternative was the one adopted, flocculation combined with ion-exchange.

There are a few adjunct options that might possibly prove economically and technically feasible.

The use of clinoptilolite in either or both the flocculator and the eluant stream has been discussed.

The use of a second stage ion-exchange bed is under investigation.

Another adjunct option is the addition of carbonate ion to the system to improve the removal of hardness in the flocculator. A glance at the solubility product of strontium carbonate will show that the addition of carbonate in economic quantities will not be effective in precipitating strontium. It is possible, though not particularly attractive, to substitute sodium carbonate for the sodium hydroxide used to neutralize the effluents in the interceptor.

Another option, that has previously been mentioned, is the addition of stable strontium to isotopically dilute the radioactive strontium. This was begun on October 24, 1971. Due to the large holdup in Lagoons 1 and 2, coupled with the necessary time delay in obtaining strontium analyses, no data are available to even indicate what the effectiveness of this option might be. From a theoretical point of view, it is the most promising option that has been devised.

6. Anticipated Improvements

There are two areas, where, in the long run, improvements in recovery will be obtained. The first area is within the main plant and the second is in the waste system itself.

NFS is presently installing and has made a submittal covering a revised acid recovery system. This revised system will reduce the carry-over of strontium and cesium to the interceptors and the liquid waste system by providing improved de-entrainment in evaporators and the acid fractionators. This step alone is expected to reduce the strontium-cesium load on the recovery system by better than 90%. Caution should be exercised, however, in translating this to a 90% reduction in the strontium-cesium level in the effluents from the waste system. The reduction in load will in turn reduce the already extremely low concentration of these isotopes to the point where the ion-exchange beds might not be more effective than at present. In any case, the installation of the new evaporators and the new fractionating column will not be immediately effective since they will not go on stream until some time in 1972.

The near term improvements in effective removal of strontium from the effluents then must come from modifications wtihin the system itself. A comprehensive study on many fronts which appear promising is underway. While it is always somewhat risky to predict performance without experience, a decrease in concentration by one order of magnitude was made in September, and with the intensive study and numerous options presently available, it is expected that a further reduction by another order of magnitude might result.

111677

UNITED STATES
ATOMIC ENERGY COMMISSION
WASHINGTON, D.C. 20545

MAY 27 1970

MAY 28 1970

Mr. Robert N. Miller, President
Nuclear Fuel Services, Inc.
Wheaton Plaza Office Building
Suite 906
Wheaton, Maryland 20902

Dear Mr. Miller:

This letter will confirm our May 15, 1970 discussion with you, Messrs. Bechhoefer and Lewis and Dr. North concerning waste releases and environmental monitoring at the West Valley plant.

By application dated July 9, 1969, you requested authorization for deep-well disposal of low-level waste from the West Valley plant. This application was responsive to our May 31, 1968, letter stating that releases from the NFS plant should be significantly reduced. After careful consideration of your application it has become clear that questions related to public health and safety raised by deep-well disposal will not be resolved in the near future. We cannot, therefore, act on your request at this time.

Monitoring programs have shown an increase of radioactivity in the environment of the plant. While the observed levels of radioactivity do not present an immediate public health problem, they further confirm our position that significant reductions in the level of radioactivity discharged to the watershed should be made, and that the technical specifications governing liquid effluents from the plant site should be revised.

Thus, it is important that you develop an alternate plan to achieve at the earliest possible date a reduction in quantities and concentrations of radioactivity released in liquid effluents.

RECEIVED
JUN 2 1970
J. P. DUCKWORTH

The objective of the alternate plan should be to comply with Appendix B, Table II of 10 CFR Part 20 for radioactivity in liquids at the point of release from the lagoon rather than down stream as presently provided in your license.

We request that you submit a proposal describing the scope and schedule for actions to be taken to reduce releases. It may be necessary to consider a stepwise program, if a full reduction to the ultimate target levels is not immediately practical. Please provide a schedule for any stepwise reduction, and include an indication of any nuclides the reduction of which would be emphasized at any given step.

In addition to actions to reduce the radioactivity released, your environmental monitoring program should be expanded. The expanded program should emphasize reliable identification and quantitative measurement of the principal isotopes which are now or could be present in the environment as the result of liquid and airborne releases. In addition, the program should provide a basis for evaluation of the effects of radioactivity released to the environment, including identification of the potential pathways for the radioactivity to reach man, and estimation of resulting exposures to people. We are particularly interested in the releases to the Cattaraugus watershed, in the concentration of radioactivity in stream biota and silts, in transfer of the radioactivity to human foods such as fish and deer, and in the potential resultant dose to the public.

A detailed description of the expanded environmental monitoring program should be submitted for our review.

Because of the importance of both of these matters, we would appreciate your reply within 30 days of the date of this letter.

Sincerely,

Lyall Johnson
Acting Director
Division of Materials Licensing

111467

NFS

NUCLEAR FUEL SERVICES, INC.

WHEATON PLAZA BUILDING, SUITE 906
WHEATON, MARYLAND 20902
AREA CODE 301-TELEPHONE 933-5440

June 29, 1970

Mr. Lyall Johnson
Acting Director
Divison of Materials Licensing
United States Atomic Energy Commission
Washington, D. C. 20545

Dear Mr. Johnson:

This will acknowledge receipt of your letter of May 27, 1970 concerning waste releases and environmental monitoring at the West Valley Plant.

We note with considerable disappointment your statement that our proposal of July, 1969, for deep well disposal of low level wastes from the West Valley Plant raises certain questions which are not likely to be resolved in the near future and that, therefore, some alternative plan should be developed at the earliest possible date to obtain a reduction in the quantity and concentrations of radioactivity released in liquid effluents.

As you pointed out in your letter, the observed levels of radioactivity do not present an immediate public health problem. In view of our anticipated schedule or reprocessing for the next two to three years, taking into consideration both the volume of reprocessing and the nature of the fuels, we are certain that no public health problems will arise during this period. We fully agree, however, with the conclusion that since you are unable to approve the deep well at this time, immediate steps should be taken to provide an alternative method to reduce the quantities and concentrations of the radioactivity released in the low level effluents. We are proposing such an alternative in this letter. As you pointed out, a stepwise program will be required to achieve the desired results.

The studies of alternatives, which we have been making for more than two years, disclose that the most feasible alternative is chemical treatment using naturally occuring zeolites to provide ion-exchange capability. Tests which we are performing and the published literature indicate that this system should result in a reduction of at least 90% in the discharges of strontium and cesium to surface waters. The radioactive strontium on Cattaraugus Creek, which is the closest point to the plant to which there is public access, would be approximately 2% of 10 CFR 20 limits. There are indications in the literature that the reduction could be considerably greater.

Attached hereto as Annex 1 is a detailed statement of the proposed chemical treatment system for reducing radioactive liquid discharges from the plant.

We expect to have sufficient data in 60 days to permit the design and construction of a full scale treatment plant. We believe that installation of the treatment plant can be completed in six to nine months from the time of your approval.

We feel, given the present state of the art of chemical treatment of low level wastes, that the stepwise approach is both necessary and feasible. We would like to point out that the stated objective of meeting 10 CFR 20 limits at the lagoon outfall would be equivalent to say 0.02% of MPC in Cattaraugus Creek. This level would be as much as 50 times more stringient than the apparently acceptable levels being proposed for other nuclear installations.

As to an improved monitoring-program, Annex 2 describes our expanded monitoring program to provide reliable identification and quantitative measurement of the principal discharges to the environment. It also identifies potential pathways for the radioactivity to reach man and estimates the resulting exposures. As we pointed out in the Annex much of the research required for the program has already been completed and the improved environmental monitoring program should be operative promptly after its approval by the Commission. It should be noted that as the overall objective is approached, the need for such an extensive program will diminish.

While it is not feasible to set up a liquid monitoring system which will differentiate in daily readings among the various types of isotopes-released to Cattaraugus Creek, we are able, however, through established sampling procedures to make a reasonably accurate estimate of the isotopic contents of the discharges.

We believe that it is premature to suggest in this letter revised Technical Specifications concerning the discharge of low level liquid effluents. At an early date we expect to be in a position to make meaningful suggestions.

As stated at the meeting of May 15, 1970, we expect to be in contact with the Division of Material Licensing in working out in detail and bringing into effect the plans which we are submitting.

Very truly yours,

NUCLEAR FUEL SERVICES, INC.

Robert N. Miller
PRESIDENT

ANNEX I

LOW LEVEL LIQUID WASTE TREATMENT

NFS had concluded in its early studies of low level liquid waste treatment that of those systems providing satisfactory decontamination, precipitation-scavenging treatment was probably the most attractive approach considering cost of installation and operation. Reasonably good decontamination factors have been reported and the operation is relatively simple, reliable and subject to automatic control. Our most recent studies have confirmed this opinion.

A literature search was performed for NFS by Battelle Northwest Laboratory, and a bibliography of literature available at West Valley is attached in the Appendix.

The following general conclusions were reached following the literature search:

1. Reasonable capacities and decontamination factors can be obtained for exchange techniques (resins, zeolites or clays) only when the waste is effectively pretreated to remove algae, organics, detergents and turbidity.

Detergents interfere with chemical treatments at levels of 5 ppm and ruin processes at 15-20 ppm. Complexing agents such as EDTA or polyphosphates are very detrimental and pH control is important.

3. Clinoptilolite has been proven at Hanford and Idaho for high removal of cesium and strontium in pool water and alkaline condensates.

4. Standard water treatment can provide overall decontamination factors as high as ten.

5. Sr coagulation as phosphate is not effective for effluents containing high solids or detergents. Co-precipitation of Sr with Ca is effective, especially in a multi-stage precipitator.

6. Large scale plants using coagulation-flocculation have been operated successfully at ORNL (15,000 and 300,000 gpd), Harwell (15,000 gpd) and Trombay (200,000 gpd). Since coagulation is ineffective in removing soluble activity, scavenging and exchange treatment is added. Sludge was maintained at 0.15-0.3% of the volume treated.

Oak Ridge National Laboratory (ORNL-3863) has demonstrated a 15,000 gallon per day pilot using scavenging, precipitation and ion-exchange. The process demonstrated the following decontamination factors:

Contamination	Decontamination Factor
Gross α	17
Gross β	11
Cesium	1200
Strontium	1400
Ruthenium	2.6
Rare Earths	580

Preliminary tests at West Valley confirmed that these DF's could be achieved on NFS effluents. The DF's for strontium and cesium were somewhat lower than the Oak Ridge data but this is believed to be due to equipment differences rather than a basic process difference.

Both Hanford and Idaho have used a naturally occurring zeolite, clinoptilolite, for the removal of strontium and cesium from low level wastes. It is highly specific for these ions and is reportedly insensitive to other ions such as calcium. For this reason the basic Oak Ridge process was modified to substitute clinoptilolite for the grundite clay and the ion-exchange system. Overall DF's obtained with the modified system without the alumina column were more than 15 for cesium and more than 108 for strontium at concentrations of 7.4×10^{-4} μCi Cs-137/ml and 5.4×10^{-3} μCi Sr-85/ml.

Since this system appears to furnish adequate decontamination and is subject to rapid installation using standard water treatment equipment, this process has been adopted for further development at NFS. This process has been tested on clean solutions of strontium and cesium, interceptor solutions and lagoon samples. DF's on clean solutions were significantly higher indicating that with proper pretreatment of the waste liquids, the process should provide the necessary removal of strontium and cesium. Some removal of ruthenium should result, although no data is available for this isotope.

It will be necessary to run pilot plant scale tests on lagoon solutions prior to the final design of the installation since plugging of the filter bed occurred in some of the tests. This was probably due to the presence of algae and some suspended solids in the lagoon wastes which can be easily filtered out in the treatment plant.

As presently conceived, the treatment plant will consist of the following basic steps:

1. Addition of about 1000 ppm of Fe as $FeSO_4$.
2. pH adjustment to about pH9 using 30% NaOH solution to precipitate ferrous hydroxide.
3. Flocculation and sedimentation with the addition of about 150 ppm clinoptilolite ground to -100 or -200 mesh.

It will be possible, should the need arise, to take the effluent from the flocculator through a fixed bed of -20 mesh clinoplilolite for further cleanup.

The sludge bed will be withdrawn periodically from the flocculator and filtered through a pressure leaf filter. The cake will be discharged to drums which will be buried.

The liquid effluents from the flocculator will also be filtered to remove any trace of solids that might carry over. These solids will also be buried. The total solids discharged is estimated to be about one 55-gal. drum per day.

There are presently two locations being considered for the installations of the waste treatment plant: (1) immediately after the interceptors, and (2) between lagoons. The latter location seems to be more feasible because of the inprocess storage capacity afforded by lagoons. This would provide surge capacity in case of process or equipment problems and would also provide a steady flow to the flocculator. The latter is quite important, for the flocculator can easily be upset by flow fluctuations. Once the bed is set up, it is highly desirable to maintain steady conditions in the equipment.

ESTIMATED SCHEDULE FOR
INSTALLATION

It is believed that the equipment can be designed and installed in from six to nine months following approval of this approach.

It is estimated that the necessary pilot plant tests can be completed in 60 days. These are scheduled to begin immediately so that results should be available by September 1.

Preliminary engineering is in progress and requests for quotations for long delivery items such as the flocculator and the filters have been sent out. Engineering is scheduled for completion by September 15.

While it is not possible to give a firm construction schedule at this time, we are of the opinion that construction of the necessary building and external facilities might begin on September 15 and be completed by November 30. This schedule will, of course, depend on delivery of the requisite equipment. Delivery can not be estimated at this time.

APPENDIX 1

111476

LISTING OF LOW-LEVEL WASTE TREATMENT MATERIAL
FORWARDED TO NUCLEAR FUEL SERVICES, JUNE 12, 1970

B. W. Mercer. Adsorption of Trace Ions from Intermediate Level Radioactive Wastes by Ion Exchange, BNWL-180. Battelle-Northwest, Richland, Washington, January 1966.

J. H. Clarke, W. C. J. White, R. F. Cumberland, and T. D. Wright. Investigations into the Use of Ion Exchange Resins for the Decontamination of Radioactive Effluent, Part 2, Pilot Plant Trials, AERE-R-4905. Atomic Energy Research Establishment, Harwell, April 1965.

J. H. Clarke, R. F. Cumberland, and M. J. Smyth. The Treatment of Low Level Radioactive Effluent by a Ferric Hydroxide Precipitation, AERE-R-5724. Atomic Energy Research Establishment, Harwell, April, 1968.

L. L. Ames, Jr., and B. W. Mercer. Unidirectional Cesium Loading, Scrubbing, and Elution of AW500 Zeolite Columns, BNWL-732. Battelle-Northwest, Richland, Washington, May 1968.

B. W. Mercer, L. L. Ames, and R. G. Parkhurst. Removal of ^{137}Cs from Alkaline Condensate Wastes, BNWL-829. Battelle-Northwest, Richland, Washington, November 1968.

J. S. Buckingham. Laboratory Evaluation of Zeolitic Material for Removing Radioactive Cesium from Alkaline Waste Solutions, ARH-SA-49, Atlantic Richfield Hanford Company, Richland, Washington, January 1970.

Operation and Control of Ion-Exchange Processes for Treatment of Radioactive Wastes. Technical Reports Series No. 78, International Atomic Energy Agency, Vienna, 1967.

Economics in Managing Radioactive Wastes, Technical Reports Series No. 83, International Atomic Energy Agency, Vienna, 1968.

P. E. Pottier. Chemical Treatment of Radioactive Wastes, Technical Reports Series No. 89, International Atomic Energy Agency, Vienna, 1968.

R. H. Burns, J. H. Clarke, T. D. Wright, and J. H. Myatt. "Present Practices in the Treatment of Liquid Wastes at the Atomic Energy Research Establishment, Harwell," pp. 17-29. Practices in the Treatment of Low and Intermediate-Level Radioactive Wastes, International Atomic Energy Agency, Vienna, 1968.

B. Gaudernack and J. E. Lundby. "Waste Treatment at the Institute for Atomic Energy, Kjeller," Ibid. pp. 147-161.

R. H. Burns, J. H. Clarke, and T. D. Wright. "Filtration and Ion-Exchange Plants in Use at the Atomic Energy Research Establishment, Harwell," Ibid. pp. 223-254.

H. Krause and O. Neutwich. "The Treatment of Low-Level and Medium-Level Liquid Radioactive Wastes at the Karlsruhe Nuclear Research Centre," Ibid. pp. 317-337.

K. E. Cowser and L. C. Lasher. "Operational Experience in the Treatment of Radioactive Waste at Oak Ridge National Laboratory and Brookhaven National Laboratory," Ibid. pp. 381-401.

C. B. Amberson and D. W. Rhodes. "Treatment of Intermediate and Low-Level Radioactive Wastes at the National Reactor Testing Station (NRTS)," Ibid. pp. 419-437.

R. M. Girdler. "Handling of Low and Medium-Level Liquid Waste at the Savannah River Plant," Ibid. pp. 477-496.

R. E. Blanco, W. Davis, Jr., H. W. Godbee, L. J. King, J. J. Roberts, G. J. Alkire, E. R. Irish, and B. W. Mercer. "Recent Developments in Treating Low and Intermediate-Level Radioactive Waste in the United States of America," Ibid. pp. 793-839.

B. W. Mercer. Treatment of Radioactive Wastes by Ion Exchange, presented at AIChE meeting in Portland, Oregon, August 24-27, 1969.

J. M. Skarpelos. Progress in Treatment of a Radioactive Condensate Waste, HW-79174. Hanford Atomic Products Operation, Richland, Washington, October 1963.

"Removal of Radioactivity by Water-Treatment Processes," pp. 155-202, Low-Level Radioactive Wastes, Their Handling, Treatment, and Disposal, by C. P. Straub, U. S. Atomic Energy Commission, 1964.

"Treatment on Site-Chemical Precipitation," Ibid. pp. 235-259.

"Treatment on Site - Ion Exchange and Adsorption," Ibid. pp. 261-288.

UNITED STATES
ATOMIC ENERGY COMMISSION
WASHINGTON, D.C. 20545

December 17, 1971

COPY

Docket No. 50-201

Nuclear Fuel Services, Inc.
ATTN: Mr. J. P. Duckworth
Plant Manager
Box 124
West Valley, New York 14171

And

New York Atomic and Space
Development Authority
ATTN: Mr. James Cline
General Manager
230 Park Avenue
New York, New York 10017

Change No. 16
License No. CSF-1

Gentlemen:

This refers to Nuclear Fuel Services' letters dated August 13, 1971, October 15, 1971, October 29, 1971, and November 12, 1971, regarding changes in Technical Specifications 4.4.4, 4.5.3, and 4.11 of Provisional License No. CSF-1 to authorize transfer from shipping containers to in-process storage vessels and the processing of plutonium nitrate-uranyl nitrate solutions (Category 10 fuel) at the West Valley, New York Facility.

We have reviewed your proposed changes as identified above and agree that they are necessary to authorize transfer from shipping containers to in-process storage vessels and processing of Category 10 fuel. In addition, we have found it necessary to incorporate the contents of your letters of August 13, 1971, October 15, 1971, and October 29, 1971, as a new Technical Specification 7.5 to describe special operational and administrative procedures to be followed for Category 10 fuel. Technical Specification 3.1 has also been modified for conformity. All of these matters have been discussed with NFS personnel.

We have also reviewed the information from Nuclear Fuel Services on the low-level waste treatment plant submitted by letters dated December 1, and December 8, 1971. We find that the releases of radioactivity in the plant effluents will not be significantly influenced by processing Category 10 fuel and that the following interim waste management controls are acceptable:

COPY

COPY

A. NFS shall minimize effluent releases to the environs and in any case limit releases such that:

1. The concentration of Cs-137 in the liquid waste at the point of release from the lagoon system should not exceed 2 x 10^{-5} uCi/ml.

2. The concentration of radioactivity in the Cattaraugus Creek should not exceed either:

   a) Ten percent (10%) of the prorated concentrations listed in Appendix B, Table II, 10 CFR Part 20 averaged over the SEFOR processing period; or

   b) Twenty percent (20%) of the prorated concentrations listed in Appendix B, Table II, 10 CFR Part 20 for any weekly composite sample taken during the SEFOR processing period in accordance with Technical Specification 5.1.1.

3. If the radioactive concentration exceeds either 1. or 2. above, then NFS shall:

   a) Take such action as is necessary to come into prompt compliance,

   b) Make an investigation to identify the cause or causes for such levels of radioactivity,

   c) Define and initiate a program of action to reduce such levels, and

   d) Report these actions to the Commission on a timely basis.

Information concerning the continuing efforts by Nuclear Fuel Services to improve performance of the low-level waste facility has been presented in the submittals from NFS dated December 1 and December 3, 1971, and in discussions with NFS representatives. Although we realize that your release values have been below MPC in Cattaraugus Creek, we expect the performance of the low level waste treatment plant to be improved as expeditiously as possible so as to limit cesium and strontium in line with Technical Specification Change No. 15. In order that we may follow your progress in resolving this matter, you should submit a monthly report to the Division of Materials Licensing covering the status of progress being made. The first of these reports should be submitted by January 15, 1972. In addition, though we recognize the difficulties associated with accurately predicting the progress of studies on low level waste, a report should be submitted within 30 days describing the scope,

COPY

COPY

goals, and schedule of actions to be taken to reduce the activities of releases of liquid releases. The near term goal for liquid effluent releases should be to comply with Technical Specification Change No. 15 for liquid effluents by July 1, 1972. The objective, however, remains that of meeting concentrations equal to those set forth in Appendix B, Table II of 10 CFR Part 20 at the point of release from the lagoon as stated in our letter of May 27, 1970. We will be in contact with you in specific regard to Technical Specification Change No. 15 in the near future.

We have determined that the changes in the Technical Specifications designated as Change No. 16 (as set forth on enclosed pages 6, 20, 21a, 22, 22a, 23, 24a, 25, 37, 38, 39 and 77), do not present significant hazard considerations not described or implicit in the NFS Final Safety Analysis Report, and that there is reasonable assurance that the health and safety of the public will not be endangered.

A copy of the Safety Evaluation by the Division of Materials Licensing relating to Change No. 16 is enclosed.

Pursuant to the Atomic Energy Act of 1954, as amended, and the regulations of Title 10, Code of Federal Regulations, Chapter I, Parts 2 and 50, we have authorized changes to Technical Specifications 3.1, 4.4, 4.5, and 4.11 to Provisional License No. CSF-1 and incorporated Nuclear Fuel Services, Inc.'s letters of August 15, October 15, and October 29, 1971, as a new section 7.5 of the Technical Specifications.

FOR THE ATOMIC ENERGY COMMISSION

S. H. Smiley, Director
Division of Materials Licensing

Enclosures:
1. Change No. 16, pgs. 6, 20, 21a, 22, 22a, 23, 24a, 25, 37, 38, 39 and 77
2. Safety Evaluation

cc: Mr. B. G. Bechhoefer, w/encl.
Mr. O. M. Ruebhausen, w/encl.
Dr. E. D. North, e/encl.
Mr. Robert N. Miller, w/encl.

COPY

3.1.2 Possession Limits

The quantity of materials authorized by Specification 3.1.1 shall be limited so that the special nuclear material at the facility at one time does not exceed the following:

21,000 kilograms of U-235
3,200 kilograms of U-235
4,000 kilograms of Plutonium

3.1.3 Form of Materials

Material Categories 1, 2, 3, 4, 6, 8 and 9 authorized in Specification 3.1.1 may be in those forms required for (a) the flow of material through the plant described in Section 1.3 and (b) related research and/or development work.

Material Categories 5 and 7 authorized in Specification 3.1.1 may be received and retained in the fuel storage pool in the form in which they are received, but are not to be converted into any other form until tankage which may be necessary for storage of the processing wastes from these categories has been completed and approved by the United States Atomic Energy Commission.

Material Category 10 authorized in Specification 3.1.1 may be received in shipping packages authorized by the USAEC and storage shall be in accordance with Technical Specification 4.10.1.3. Transfer to process storage and processing of Category 10 fuel shall be in accordance with Technical Specifications 4.4, 4.5, 4.11 and 7.5.

Bases

The facility has been constructed with a capability to process the categories of nuclear fuel specified in 3.1.1, above, and to accommodate the byproducts associated therewith except for wastes derived from the categories so specified in 3.1.3, Paragraph 2.

The possession limits specified in 3.1.2 are derived from the following assumptions:

(a) the 924 canister spaces in the fuel pool are filled with canisters each of which contain 10 kg of U-235 in addition to the Pu and U-233 which could be produced by a 40% burnup of this quantity of U-235 at a conversion ratio of 0.8,

Page withheld as containing

Export Controlled Information

Page withheld as containing

Export Controlled Information

Page withheld as containing

Export Controlled Information

Page withheld as containing

Export Controlled Information

Page withheld as containing

Export Controlled Information

Page withheld as containing

Export Controlled Information

Page withheld as containing

Export Controlled Information

Page withheld as containing

Export Controlled Information

Page withheld as containing

Export Controlled Information

If this specification is found to be exceeded, no further fissionable material will be added to the rework system until the situation is corrected; and the remedial action must be taken immediately.

(Change No. 16)

Page withheld as containing

Export Controlled Information

Page withheld as containing

Export Controlled Information

Page withheld as containing

Export Controlled Information

Page withheld as containing

Export Controlled Information

Page withheld as containing

Export Controlled Information

ANNEX II

EXPANDED ENVIRONMENTAL MONITORING PROGRAM

OBJECTIVE

Meaningful environmental monitoring for any nuclear facility and more particularly a reprocessing facility such as Nuclear Fuel Services Plant at West Valley, New York, is not a program to study the fate of all radionuclides released to the environs. Rather the program should monitor the key indicators from the stand point of allowable concentrations or overall abundance and relate the concentration of other radionuclides to these. NFS will utilize available experimental or applied work done by numerous workers in the health and safety, radiochemistry, nuclear physics, and other related disciplines as well as its own data.

BACKGROUND

The NFS environmental program began in July, 1963 (3 years before startup of plant) to determine background radiation present in air, surface water, ground water, milk, silt, soil, precipitation, and vegetation. Following two years of data collection, the samples found to be most influenced by nuclear fallout were air, surface, water, milk, silt, and precipitation.

The program in use at time of plant startup included all the samples which were found to rapidly respond to releases in air and water from the plant, gross activity measurements, and measurement of the more limiting radionuclides, such as ^{90}Sr.

Over the past four years, the NFS program has been expanded to include isotopes of current interest in environmental concentrations and the development of instruments capable of measuring these low levels. For example, in 1968 NFS added ^{129}I to its routine program because of its relatively low recommended concentration even though our calculations revealed no likelihood of reaching this concentration in the environs. Because instrument sensitivity was not low enough at that time to measure I-129 concentration at the site boundary, concentrations in the stack effluent were measured and the concentration was calculated by dilution. Now with improved ^{129}I sensitivity, the measured concentration at the site boundary is again provided in the program.

In 1968, to be able to study the exposure from fallout and gaseous effluents to persons living about the site, thermoluminescent dosimeters were placed at the thirty-two nearest neighbors around the perimeter. Data collected was not meaningful; however, evaluation of this technique is continuing. Other equipment has recently been purchased which will directly measure external radiation exposure due to Kr-85.

In 1969, because of the increased interest in concentrations of radioactivity in Buttermilk Creek, the Franks Creek sample station was moved to Buttermilk Creek. Operational difficulties were not eliminated until this spring; however, the sampler is not operating continuously. Data obtained from these samples will enable us to more carefully monitor and control releases of low level liquid effluents.

EXTENT OF EXISTING
AND
PROPOSED PROGRAMS

Tables 1, 2, 3 and 4 show present and proposed program for obtaining samples as follows:

Table 1 - Samples at point of release

Table 2 - Samples Onsite

Table 3 - Samples at Perimeter

Table 4 - Samples Offsite

The proposed increase in samples and specific analyses reflect known tendencies toward solubility, known abundance of radionuclides for anticipated fuel cooling time, and commercial availability of quality analyses.

The NFS environmental monitoring program regularly uses input from independent and cooperative studies performed at this site and work reported from other sites to continue to orient its program toward realistic evaluation of the impact of this facility on health and well-being of persons living nearby.

Among the studies which have and will continue to contribute very useful information, is the work done by:

Health Research, Inc., Albany, New York, (ecological study)

Western New York Nuclear Research Center, Buffalo, New York, Environs monitoring)

U. S. Public Health Service, Winchester, Mass., (detailed liquid and gas effluent study and environs influence)

ocation	Sample	Frequency	Alpha sol	Alpha insol	Beta sol	Beta insol	^{3}H	^{90}Sr sol	^{90}Sr insol	^{106}Ru sol	^{106}Ru insol	^{137}Cs sol	^{137}Cs insol	^{144}Ce sol	^{144}Ce insol	^{95}Zr sol	^{95}Zr insol	^{129}I sol	Pu sol	Pu insol	U sol	U insol	Solids susp.	^{131}I	^{85}...
int of Release																									
tack	Particles	Wkly, continuous		X		X																			
		June, December							X																
	Gases	Continuous																							
		Wkly, continuous																						X	
agoon 3 Weir	Water	Daily			X																				
		Weekly	X				X																		
		Month composite	X	X	X	X	X	X	X									X							
		Quar. composite								0		0	0	0			0			0	0		0		
		Annual composite								0	0			0	0	0	0		0	0	0	0			

= present program

= addi to present program

ation	Sample	Frequency	Alpha sol	Alpha insol	Beta sol	Beta insol	^{3}H	^{90}Sr sol	^{90}Sr insol	^{106}Ru sol	^{106}Ru insol	^{137}Cs sol	^{137}Cs insol	^{144}Ce sol	^{144}Ce insol	^{95}Zr sol	^{95}Zr insol	^{129}I sol	Pu sol	Pu insol	U sol	U insol	Solids susp.	Part. Size	^{131}I
erceptor	Water	Daily, batch	X		X																				
		Quar. Composite	X		X		X	X																	
goon 2	Water	Monthly	X		X		X																		
rial Lagoon	Water	At discharge	X		X																				
		June, December						X										X							
nex	Particles	Daily				X																		X	
boratory (0.3 mi.S)	Particles	Daily				X																		X	
S Farm	Milk	Monthly			X																				X
		Quar. Composite						X				0													
	Bovine Bone	Annual							0																
	Bovine Meat	Annual											0												
	Bovine Thyroid	Annual																							0
ttermilk Creek	Water	Quar. Composite	0	0	0	0	0	0		0		0	0							0	0				
		Annual Composite						0	0	0	0								0	0	0	0			
ant	Drinking Water	Monthly	X		X		X																		

= present program

= additic present program

TABLE 3

ation	Sample	Frequency	Alpha sol	Alpha insol	Beta sol	Beta insol	^{3}H	^{90}Sr sol	^{90}Sr insol	^{106}Ru sol	^{106}Ru insol	^{137}Cs sol	^{137}Cs insol	^{144}Ce sol	^{144}Ce insol	^{95}Zr sol	^{95}Zr insol	^{129}I sol	Pu sol	Pu insol	U sol	U insol	Solids susp.
meter																							
es at north, east,																							
th sides (3)	Particles	Wkly, continuous		X		X																	
	Fallout	Monthly, "		X		X																	
taraugus Creek	Plants	June, September							0		0		0										
	Silt	June, September		X		X			X		0		0										
	Water	Wkly, composite	X	X	X	X	X																
		Monthly, "						X	X														
		Quar., "								0		0											
		Annual, "								0	0	0	0					0					
	Fish Flesh	June, September							0		0		0										

= present program

= additio present program

cation	Sample	Frequency	Alpha sol	Alpha insol	Beta sol	Beta insol	^{3}H	^{90}Sr sol	^{90}Sr insol	^{106}Ru sol	^{106}Ru insol	^{137}Cs sol	^{137}Cs insol	^{144}Ce sol	^{144}Ce insol	^{95}Zr sol	^{95}Zr insol	^{129}I sol	Pu sol	Pu insol	U sol	U insol	Solids susp.	Gamma Radiation
e																								
tes in 16 compass																								
rections	Radiation by TLD	Semi-annual, con-																						
		tinuous																						X
	By ion chamber	Annual																						O
arby Farms	Corn	Harvest time											O											
	Potato	Harvest time											X											
	Lettuce	Harvest time											O											

= present program

= additior present program

U. S. Geological Surveys, Area Office, (flow in watershed)

N. Y. Concervation Department, Albany, New York (through local offices), (special samples)

Eastman Kodak, Rochester, New York, (fallout and size distribution)

Also, the reactor operators have cooperated excellently to furnish data which makes possible supplementary confirmation of releases such as ^{85}Kr, ^{131}I, and ^{3}H.

Much of the work done by these groups has been to test the capacity of equipment to monitor very low concentrations of radionuclides and to establish the limiting radionuclides which result from natural interactions in the environs. Some of the research work has been fundamental and will be useful only to those having responsibility for recommending concentrations in the environs. From their invaluable studies, NFS has been able to direct its program to follow those radionuclides which will indicate an approach to applicable limits.

NFS will increase it surveillance program to determine the less-limiting radionuclides also present at detectable concentration. This program will not only strengthen the assurance NFS and the Health Agencies already have that current environmental levels are in all cases complying with pertinent regulations, but also the expanded program should furnish useful data to those who recommend concentrations in the environs.

EVALUATION OF EFFECTS OF RADIOACT
RELEASED TO THE ENVIRONMENT

The initial evaluation of effects of ra
the direction of the manager of Health and
lems are submitted to the Plant Safety Commi
appropriate NFS action.

NFS has already completed several studi
ation of potential pathways for radioactivity
of resulting exposures to people, the conclu
forth below:

ENVIRONMENTAL EFFECTS IN CATTARAUGUS

Sr-90 IN FISH

During 1969 the following discharges fro
waters were made:

1969 Discharged Activity Curies	
Gross α	0.376
Gross β	136.1
Tritium	5930
Sr-90	10.07

The average per cent of MPC in Cattaraugu
monthly composite samples was 19.7%.

The U. S. Public Health Service conducted
West Valley Plant during 1969. Although their

yet been issued, preliminary data taken during this period has been made available to NFS. The preliminary data closely confirms the NFS data for they found the following percent of MPC in Cattaraugus Creek on June 17, 1969:

Sr-90	15 %
Ru-106	5 %
Tritium	1 %
Cs-137	.006%

It was concluded that Sr-90, Ru-106 and Tritium were the significant radionuclides in Cattaraugus Creek. Tritium at this level is not believed to be a hazard, and ruthenium, while it may be found in fish gut, does not have any well developed food path to man. This leaves Sr-90 as the only significant radionuclide with a well developed food path to man from Cattaraugus Creek.

Mr. A. E. Aikens, Jr., consultant to New York Atomic and Space Development Authority recently made a study of the potential resultant dose to the public from Sr-90 in fish based on 1968-1969 data. Much of the following data is condensed from his report. He concluded that "No member of the public would receive an exposure in excess of the established national guideline from the consumption of fish containing Sr-90 and caught in Cattaraugus Creek. The analysis also shows that only periodic confirmatory surveillance prescribed as Range I by the FRC is required."

Strontium-90 is preferentially taken up by the fish bone, and is not concentrated in the flesh. ORNL Report 3721 provides much data taken over a 2 year period from fish in the Clinch River, where Sr-90 concentrations varied from 1.7 to 51 pCi/liter. It was found that white crappie exposed to 4.3 pCi/liter Sr-90 contained 32 pCi Sr-90/g of calcium in flesh and 40 pCi/g Ca in bone. It was also indicated that edible portions of fish contain from 0,1 to 0.3 grams of calcium per kg. and that the whole fish contains about 8 g Ca per kg. Thus, it can be assumed that 1 kg. of fish contains 7.7 g Ca in bone and 0.3 g Ca in flesh.

The following table presents data obtained from Cattaraugus Creek fish by the New York State Health Department in 1969:

Location	Creek Concentration pCi/liter	Whole Fish Content
Buttermilk Creek	142	289 (Trout)
		1373 (Sucker)
Springville Dam	10	415 (Bullhead)
Zoar Valley	13	306 (Sucker)
Mouth	10	38 (Perch)
		431 (Sheephead)
		269 (Bullhead)
		100 (Bullhead)
		68 (Shad)
		87 (Smelt)
		863 (Rockbass)

The following table presents similar data obtained during 1968:

Location	Creek Concentration pCi Sr-90/liter	Whole Fish Content pCi Sr-90/kg.
Buttermilk Creek	104	22,000 (Small Fish)*
Springville	38	1,144 (Sucker)
Frey Bridge	6 (est.)	2,910 (Small Fish)
Zoar Valley	6 (est.)	3,080 (Sucker)
40 Bridge	6 (est.)	165 (Sucker)
Rt. 343 Bridge	4 (est.)	185 (Sucker)
Mouth	4 (est.)	435 (Sucker)
		642 (Carp)
		310 (Bass)
		350 (Perch)
Mouth	20 (est.)	536 (Sucker)
		971 (Bass)
		704 (Carp)
		706 (Bullhead)
		789 (Coho Salmon)

*Questionable - may be off by factor of 10.

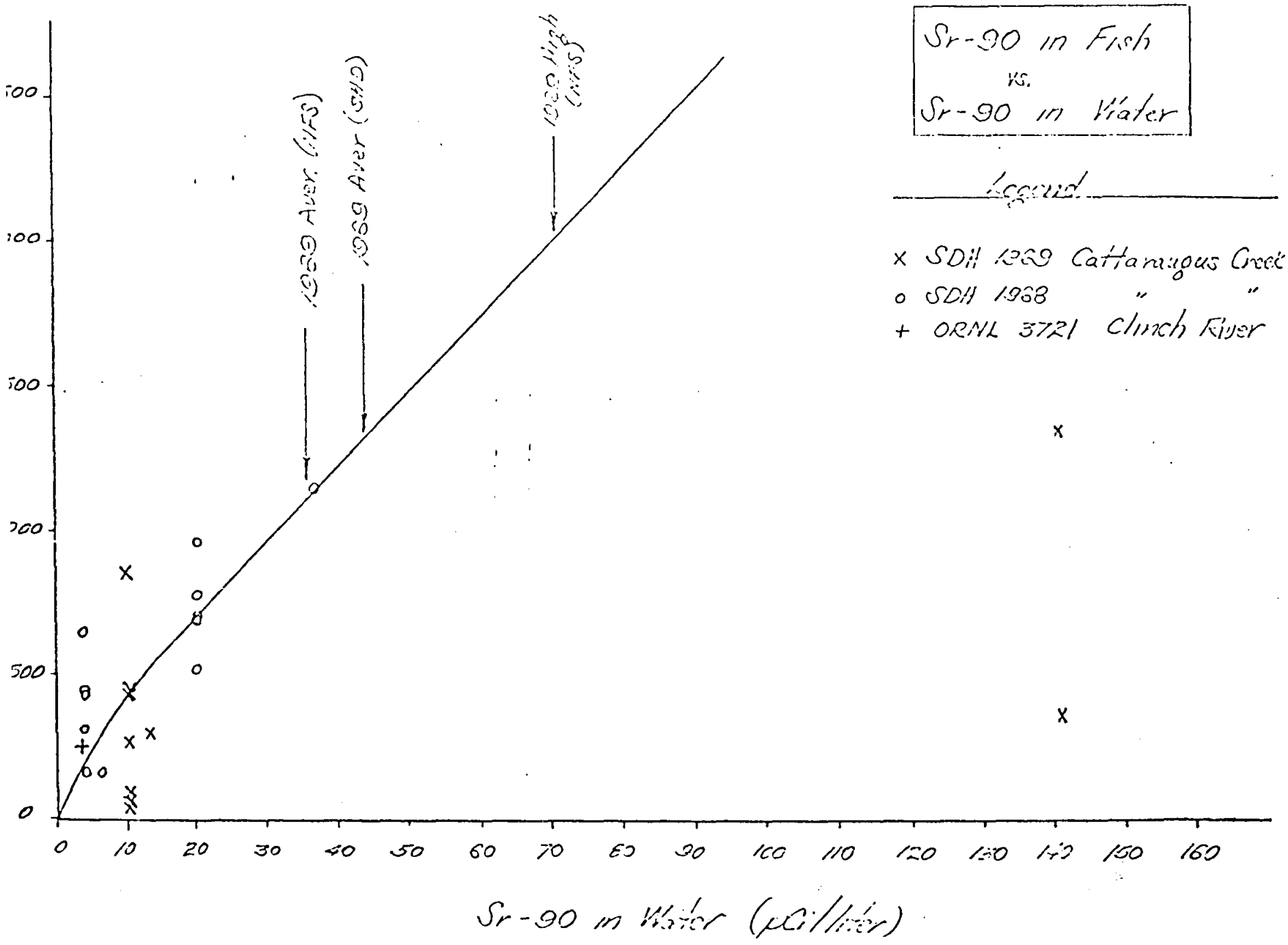
Sr-90 in Fish
vs.
Sr-90 in Water
Legend
x SDH 1969 Cattaraugus Creek
o SDH 1968 " "
+ ORNL 3721 Clinch River
1969 Aver (HFS)
1969 Aver (GHG)
1969 High (HFS)
0
500
1000
1500
2000
2500
0
10
20
30
40
50
60
70
80
90
100
110
120
130
140
150
160
Sr-90 in Water (pCi/liter)

These data are plotted in Figure 1 showing Sr-90 in fish as related to Sr-90 in water from wh taken. It is evident that the data spread quite w ignoring the extremely high results on small fish, relating pCi-Sr-90/kg. to pCi Sr-90/liter water. \ the 1969 average Sr-90 concentration in water from Department and the concentration during the highest

The New York Conservation Department made a activity on Cattaraugus Creek during a 15 day perio August, 1969. The major concentration of fishermen of the creek with the number of decreasing sharply The average daily catch was estimated to be 14 ounc The average fisherman made 6 trips per year to the annual average catch of 4 pounds (2 kg.) per year p has been assumed that 2 kg. per fisherman represents posure to a representative sample of the population.

There was one outstanding fisherman who state each day of the 180-day trout season. It has been a represents the highest exposure to any individual. that he consumes 50% of his catch, or 34 kg. per yea

From the above data it is possible to estimat daily intake of Sr-90 by the average fisherman for t concentrations; two yearly averages and the high quar

It has been assumed that the fisherman consumes 2 kg. per year, flesh only in one case and flesh plus 10% of the bone in the other. Data based on these assumptions are shown in the following table.

TABLE 5. Sr-90 Content of Fish from Cattaraugus Creek and Average Daily Intake of Sr-90.

Water Condition	Sr-90 Concentration (pCi/l.)	Sr-90 Concentration (pCi/kg.)			Daily Intake* (pCi Sr-90)	
		Whole Fish	Bone	Flesh	Flesh	Flesh & 10% Bone
1969 Average (by NFS)	36	1110	1065	45	0.25	0.83
1969 Average (by SHD)	44	1300	1250	50	0.31	0.38
1969 High Quarter (by NFS)	72	2000	1920	80	0.44	1.49

*Assuming 2 kg. fish/year/person

Following the same reasoning, the average daily intake of the ardent fisherman has been calculated assuming he consumes 34 kg. per year of fish taken from the high quarterly concentration waters. It has been assumed that he consumed 50% of his annual catch of about 68 kg per year and that the entire catch came from waters containing 72 pCi Sr-90 per liter. Again, the intake assumes flesh only and flesh plus 10% of the bones. The average daily up-take for this maximum exposure individual would be 7.5 pCi/day from flesh only and 25 pCi/day from flesh plus 10% bones.

To recapitulate, the average daily intake f man is about 1½ pCi Sr-90 per day on the high side Sr-90 per day would be more likely. The maximum e is about 25 pCi Sr-90 per day. These daily intake 600 pCi/day which is equivalent to the FRC guideli: per year to the bone marrow for the maximum indivi equivalent to 170mr per year for the average expos Thus, the average exposure is about 0.5% of the app limit while the maximum exposure to an individual i maximum for an individual.

It should also be noted that the average exp within the FRC Range I of 0 to 20 pCi Sr-90 per day the following action for Range I:

RANGE I-

"Intakes falling into this range wou under normal conditions be expected to rc any appreciable number of individuals in ulation reaching a large fraction of the Therefore, if calculations based upon a k of the sources of release of radioactive to the environment indicate that intakes population are in this range, the only ac: quired is surveillance adequate to provid

With these low levels of exposure to an admi of the population, it can be concluded that there i problem at the present levels of Sr-90 in Cattarau following the removal of 90% of the Sr-90 from the hazard becomes entirely negligible.

CESIUM IN DEER

Since a well defined population group may b food path from deer to man, the possible intake o meat has been investigated. Sr-90 is not a probl since it tends to concentrate in the bone and not thus is not available for consumption.

Deer samples have been routinely taken on Ni State Conservation Department and analyzed by the partment. The highest Cs-137 content found to thi μCi Cs-137/Kg. of meat in a deer taken inside the 1967. Presumably this deer had been drinking from the outfall and was thus exposed to the highest Cs It must be emphasized that this deer does not repr typical levels available to the deer hunter since mitted within the security area. Many deer were an 1968 and 1969 which were taken on the site but outs area. The highest Cs-137 concentration found was of meat. The average cesium content found in 18 de this level. From these concentrations we have post exposure, one the maximum exposure to an individual the expected exposure to the average deer hunter.

For the maximum exposure to any individual it that the hunter takes the highest Cs-137 content de and that he consumes the entire 80 lbs. of dressed

were to occur the hunter would receive 150mR during the period the Cs-137 is retained in the body. The biological half-life for cesium in the human body is 70 days, so that the cesium would be essentially entirely eliminated within 12 months. This exposure is 30% of the allowable exposure to any individual member of the population of 500mR per year.

For the more common situation, it has been assumed that the average hunter takes the highest cesium content deer found outside the security fence; that he consumes 50% of the 80 lbs. of dressed meat containing 3.8×10^{-3} μCi Cs-137/Kgs. This annual consumption by the average hunter is believed to be conservative. The average daily uptake of Cs-137 would be 2×10^{-4} μCi Cs-137 per day which is equivalent to 50% of the FRC guideline for Range I (0 to 360 pCi Cs-137/day). This low level of exposure requires only "Surveillance adequate to provide reasonable confirmation of calculation" according to the FRC second report.

It should be noted that these exposures were predicated upon existing levels of contamination and that when 90% of Cs-137 has been removed from the effluents the biological hazard from cesium will be negligible. Assuming a straight line relation between releases and cesium concentration in deer, the maximum individual would receive 15mR/year or 10% of the allowable exposure to the general population. This is equivalent to 30% of Range I intake of cesium. The average hunter intake of Cs-137 would be 5% of Range I of the FRC guidelines.

111656

file USPEC Correspondence

UNITED STATES
ATOMIC ENERGY COMMISSION
WASHINGTON, D.C. 20545

RECEIVED
DEC 22 1971
R. N. MILLER

DEC 20 1971

Mr. Robert N. Miller, President
Nuclear Fuel Services, Inc.
6000 Executive Boulevard, Suite 600
Rockville, Maryland 20852

Dear Mr. Miller:

This refers to your letter of October 13, 1971, in which you requested a hearing to consider the requirements of Technical Specification Change No. 15 to Provisional Operating License No. CSF-1.

In view of progress made to date and the effort being made by NFS to improve the performance of the low-level waste treatment plant, as evidenced in discussions with the staff pursuant to your request for a hearing and the substantial program and schedule of work described in the NFS submittals of December 1, 1971 and December 8, 1971, we have deferred the effective date of Change 15 as set forth below and have established the following interim requirements:

1. NFS shall actively pursue the program outlined in the NFS submittals of December 1, 1971 and December 8, 1971, toward the objective of meeting the limits specified in deferred Change 15.

2. NFS shall submit the reports discussed in our letter to you which authorized Technical Specification Change No. 16.

3. NFS and their consultants shall meet with the Commission staff and their consultants whenever we deem it necessary to discuss progress made in improving the management of low-level wastes.

4. NFS, pending completion of the low-level waste treatment improvement program and the adoption or modification of Change No. 15, shall minimize effluent releases to the environs and, in any case, limit releases such that:

   a. The concentration of Cs-137 in the liquid waste at the point of release from the lagoon system will not exceed 2×10^{-5} μCi/ml.

   b. The concentration of radioactivity in the Cattaraugus Creek will not exceed either;

      i. Ten percent (10%) of the prorated concentrations listed in Appendix B, Table II, 10 CFR Part 20 averaged over any quarterly period; or

ii. Twenty percent (20%) of the prorated concentrations listed in Appendix B, Table II, 10 CFR 20 for any weekly composite sample taken in accordance with Technical Specification 5.1.1.

c. If the radioactive concentrations exceed either a. or b. above, then NFS shall:

i. Take such action as is necessary to come into prompt compliance.

ii. Make an investigation to identify the cause or causes for such levels of radioactivity.

iii. Define and initiate a program of action to reduce such levels, and

iv. Report these actions to the Commission on a timely basis.

We have determined that these interim requirements do not present significant hazard considerations not described or implicit in the NFS Final Safety Analysis Report, and that there is reasonable assurance that the health and safety of the public will not be endangered.

Please inform us by letter at an early date of your agreement to the foregoing. Pending further notice, it is hereby ordered that Change 15 previously issued shall, in accordance with 10 CFR 2.204, become effective July 1, 1972.

FOR THE ATOMIC ENERGY COMMISSION

S. H. Smiley, Director
Division of Materials Licensing

cc: Mr. James Cline

CHANGE NO. 17

NFS

NUCLEAR FUEL SERVICES, INC.

50-201

Plant Operat

BOX 124 ··· WEST VALLEY, N.Y. 14171
AREA CODE 716 TELEPHONE 942-3235

March 6, 1972

RECEIVED

Seymour H. Smiley, Director
Division of Materials Licensing
U. S. Atomic Energy Commission
Washington, D.C. 20545

Dear Mr. Smiley:

Pursuant to Paragraph 50.59 of Title 10 of the Code of Federal Regulations, Nuclear Fuel Services, Inc. hereby requests Change No. 17 to the Technical Specifications of Provisional Operating License CSF-1. The proposed change to Specification 3.3, Calibration, Laboratory Standard and Test Materials would authorize the quantities of radioisotopes necessary for the West Valley Laboratories to support the development of the Low Level Waste Treatment Plant and the expansion of its environmental monitoring program. The addition to the authorized inventory of radionuclides will not involve any significant change in safety measures presently required.

We do not believe that the proposed changes present any significant hazard consideration not described or implicit in the NFS Final Safety Analysis Report submitted under Docket 50-201; therefore, authorization of the changes is requested.

Very truly yours,

J. P. Duckworth

J. P. Duckworth
Plant Manager

JPD:ps

Attachment

cc: D. H. Shafer
E. D. North

SENT TO: Burland
Cashman
Davies
Mathusa/Vessels

By T.K.D.
Date 4/12/72

UNITED STATES
ATOMIC ENERGY COMMISSION
WASHINGTON, D.C. 20545

April 12, 1972

COPY

Docket No. 50-201

Nuclear Fuel Services, Inc.
ATTN: Mr. J. P. Duckworth
Plant Manager
Box 124
West Valley, New York 14171

And

New York Atomic and Space
Development Authority
ATTN: Mr. James Cline
General Manager
230 Park Avenue
New York, New York 10017

Change No. 17
License No. CSF-1

Gentlemen:

This refers to your request dated March 6, 1972, for Change No. 17 to Technical Specifications of Provisional Operating License No. CSF-1. The proposed change to Specification 3.3, calibration, laboratory standard, and test material requested authorization to change the quantities of radioisotopes necessary for the West Valley laboratories to support the development of the low-level waste treatment plant and the expansion of its environmental monitoring program.

We have reviewed the information from Nuclear Fuel Services, Inc. and have determined that the change in the Technical Specification designated as Change No. 17 and set forth on enclosed page 8 does not present significant hazard consideration not described or implicit in the NFS Final Safety Analysis Report, and that there is reasonable assurance that the health and safety of the public will not be endangered.

A copy of the Safety Evaluation by the Division of Materials Licensing relating to Change No. 17 is enclosed.

COPY

COPY

Accordingly, pursuant to Section 50.59 of 10 CFR 50, the change in Technical Specification 3.3 of Provisional Operating License No. CSF-1 is authorized.

FOR THE ATOMIC ENERGY COMMISSION

S. H. Smiley, Director
Division of Materials Licensing

Enclosures:
1. Revised page 8
2. Safety Evaluation

COPY

Material	Possession Limit	Form
Plutonium	62. grams	any
Plutonium	14. grams	sealed source
Plutonium-242	6. grams	any
Plutonium-238	1. gram	any
Neptunium-237	3.5×10^{-3} curie	any
Americium-241	1.0×10^{-3} curie	any
Thallium-204	$5. \times 10^{-6}$ curie	any
Cesium-137	$5. \times 10^{-3}$ curie	any
Cesium-137	33. curies	sealed sources
Cesium-134	$5. \times 10^{-3}$ curie	any
Cerium-144	$1. \times 10^{-2}$ curie	any
Iodine-131	$6. \times 10^{-6}$ curie	any
Iodine-129	$5. \times 10^{-6}$ curie	any
Ruthenium-106	$1. \times 10^{-2}$ curie	any
Zirconium-95	$5. \times 10^{-2}$ curie	any
Strontium-90	$1. \times 10^{-2}$ curie	any
Strontium-85	$1. \times 10^{-2}$ curie	any
Krypton-85	3. curies	any
Zinc-65	$1. \times 10^{-2}$ curie	any
Cobalt-60	$5. \times 10^{-2}$ curie	any
Cobalt-58	$1. \times 10^{-2}$ curie	any
Manganese-54	$5. \times 10^{-3}$ curie	any
Antimony	$5. \times 10^{-3}$ curie	any
Any byproduct material with atomic numbers from 3 to 85 inclusive	$3. \times 10^{-6}$ curie each	any

(Change No.17)

SAFETY EVALUATION

BY

THE DIVISION OF MATERIALS LICENSING

NUCLEAR FUEL SERVICES, INC.

DOCKET NO. 50-201

LABORATORY STANDARDS AND TEST MATERIALS

By letter dated March 6, 1972, Nuclear Fuel Services, Inc. requested a change in Technical Specification 3.3 of License No. CSF-1 to increase the quantities of radioisotopes necessary for the West Valley laboratories to support the development of the low-level waste treatment plant and the expansion of its environmental monitoring program.

Technical Specification 3.3, Calibration, Laboratory Standard, and Testing Materials lists the radionuclides which maybe received, processed, stored, and used for standards, tests, measurements, and calibration.

The attached table indicates the changes in quantities requested by NFS. The table also shows the additional radionuclides for which NFS requested authorization.

The changes in possession limits proposed for laboratory purposes will not increase the hazard from an accidental release of radioactivity from the facility. Limits presently in effect which govern the routine releases of radioactivity in effluents from the facility provide adequate protection of the public from the radionuclides listed.

Approval of the attached Change No. 17 to the Technical Specification of License No. CSF-1 is recommended.

Signed: C. W. Nilsen
C. W. Nilsen
Irradiated Fuels Branch
Division of Materials
Licensing

Approved: R. B. Chitwood
R. B. Chitwood, Chief
Irradiated Fuels Branch
Division of Materials
Licensing

SAFETY EVALUATION BY THE DIRECTORATE OF LICENSING

FUELS AND MATERIALS

NUCLEAR FUEL SERVICES, INC - DOCKET NO. 50-201

CHANGE NUMBER 18 TO TECHNICAL SPECIFICATIONS

By letter dated July 19, 1972, Nuclear Fuel Services, Inc. requested changes to the Technical Specifications of License No. CSF-1. The changes requested included:

1. Modification of existing specifications 1.0-1.4, 2.0, 3.1.3, 4.7, 4.9, 4.12, 4.13, 4.15, 5.2, 6.2, 6.6, and 6.7.

2. Replacement of existing specifications 7.2, 7.3, and 7.4, with new specifications 4.16, 5.5, and 5.6 respectively.

3. Incorporation of existing specification 4.0, 5.0, 6.0, and 7.0 into a new specification number 0.0.

4. Renumbering existing specification 7.5 to 7.2.

5. Addition of a new specification 6.11, Solvent Analysis.

These changes have been designated Change no. 18.

The changes requested constitute a general updating and modification of the Technical Specifications to reflect plant modifications and operational changes made on the basis of operating experience or, in some cases, to reflect changes in the technical basis used for the specifications.

Minor modifications such as corrections, minor word changes, etc., have been made to the changes as submitted by NFS. These modifications have not, however, affected the intent of any specifications.

Brief descriptions of all changes to be made to the existing Technical Specifications under Change 18 are given in the following pages. If a change could affect safety, the safety considerations are also discussed.

Based on our review, we have concluded that the changes do not present significant hazard considerations not described or implicit in the NFS "Final Safety Analysis Report" and that there is reasonable assurance that the health and safety of the public will not be endangered by the changes.

Signed: W. A. Nixon

W. A. Nixon

Approved: R. B. Chitwood

R. B. Chitwood, Chief
Fuel Fabrication & Reprocessin
Branch
Directorate of Licensing

DISCUSSION OF CHANGE NUMBER 18

TO

TECHNICAL SPECIFICATIONS OF LICENSE CSF-1

0.0 INTRODUCTION

This new section has been added to define Technical Specifications and to explain the need and use of Specifications.

The grouping of the Specifications into seven sections is also explained and the purpose of each group is briefly discussed.

Information contained in this Specification includes that formerly contained in 4.0,5.0,6.0 and 7.0 which were introductory paragraphs to groups of Technical Specifications.

1.0 PLANT DESCRIPTION

The plant description has been rewritten to eliminate unnecessary details and to make the description correspond to actual plant design and operation.

2.0 DEFINITIONS

The list of definitions has been revised to include only technical terms that are important to a full understanding of the Technical Specifications or that may be ambiguous.

3.0 AUTHORIZED MATERIALS

Specification 3.1.3 has been modified to require that a criticality analysis of the new dissolver be made by NFS and approved by the Commission before fuels containing more than 10% U-235 could be processed. Previous submissions by NFS (letters dated April 18 and September 22, 1969) have described the nuclear safety of the dissolver for fuels enriched below 10% U-235, and have been reviewed and approved by the Commission.

Page withheld as containing

Export Controlled Information

Page withheld as containing

Export Controlled Information

4.12 CAUSTIC CONCENTRATION IN CARBON STEEL WASTE STORAGE TANKS

This Specification has been rewritten to make it clear that the caustic concentration requirements apply to carbon steel and not to stainless steel waste storage tanks. The requirements and limits for excess caustic remain unchanged.

4.13 SOLID RADIOACTIVE WASTE BURIAL

A new Section 4.13.4 has been added to prevent future burial of fuel elements. Minor changes in other parts of the Specification have been made for clarity.

Page withheld as containing

Export Controlled Information

4.16 RESPIRATORY PROTECTION EQUIPMENT

This Specification, formerly 7.2, has been rewritten primarily to set clearer use limits for respiratory protection equipment. Specificatinn 4.16.1 limits the use of full face respirators to concentrations expected to be less than 100 times the limits in Table 1, Appendix B, 10 CFR 20; i.e., the "40-hour" concentration limit for workers in restricted areas. Specification 4.16.2 limits the use of self contained or supplied air apparatus to concentrations expected to be less than 10,000 times the "40-hour" limit. These limits reflect protection factors contained in the proposed revision of 10 CFR 20.

Requirements for decontamination of respiratory equipment prior to reuse have been rewritten to reflect plant practices and to express contamination levels in terms used in the plant. These requirements are given in Specifications 4.16.4.

Other conditions of Specification 4.16 remain unchanged.

Page withheld as containing

Export Controlled Information

Page withheld as containing

Export Controlled Information

Page withheld as containing

Export Controlled Information

5.5 HIGH RADIATION AREA ACCESS

The Specification, formerly 7.3, has been changed from an "Administrative" to a "Minimum Condition for Operation" specification. A new portion, 5.5.2, recognizes the need for rope barriers and warning signs in temporary high radiation areas which cannot or, for safety reasons, should not be locked.

5.6 CONTAMINATION CONTROL

Specification 5.6.1 sets limits on allowable smearable contamination or radiation in routine entry areas, provides for prompt reduction of excessive contamination or radiation found to be present and requires, if the excessive contamination or radiation cannot be reduced in seven days, that (a) operation requiring access to the area be discontinued until the source of the excessive contamination or radiation is identified and controlled and contamination and radiation levels are reduced to the stated levels, (b) that Regulatory Operations be notified. These are the main provisions for contamination and radiation control contained in the former Specification 7.4.

Specification 5.6.2 lists areas to be exempt from the provisions of 5.6.1. These areas are freqently contaminated above 5.6.1 levels becuase of the nature of the work done in the areas or the nature of the processes used. Workers in these areas follow special work procedures and wear respiratory protection appropriate for the contamination level.

Specification 5.6.3 sets acceptable levels of contamination for areas of the fuel receipt and storage area which are frequently used, which may become heavily contaminated during operations but which can be decontaminated once operations have finished.

Some relatively minor requirements of the former 7.2 Specification such as provisions for routine surveys by operations and Health and safety personnel, marking and roping off of contamination area, etc., have been included in the bases for Specification 5.6, rather than in the Specification proper.

6.2 SUMP ALARMS AND EDUCTORS

Specification 6.2.1 has been changed only to require that repairs be made to any failed alarm or eductor "as soon as practical" in addition to the previous requirement that repairs be made before the start of the next campaign after detection of the failure.

6.6 DISSOLVER DILUTION AIR

This Specification has been modified to require that the air flow during dissolution of zirconium alloy fuels be sufficient to reduce the hydrogen concentration in the off-gas to two volume percent (50 percent of the lower explosive limit) rather than to "below its lower explosive limit" as previously required.

6.7 BORIC ACID

Specification 6.7.1 has been rewritten to require not only a minimum concentration of boric acid in the poison solution but also to require that a minimum volume of the solution be available for use.

Specification 6.7.2 has been added to require an operating test of the system for transferring poison solution to the dissolvers prior to the start of each campaign.

6.11 SOLVENT ANALYSIS

Specification 6.11 is a new specification designed to assure through periodic analysis that the concentration of tributyl phosphate in solvent used for extraction system is no higher than permitted by Specification 4.7.

7.0 ADMINISTRATIVE REQUIREMENTS

Former Technical Specification 7.2 has been rewritten and changed to Specification 4.16. Former Specification 7.3 has been rewritten and changed to Specification 5.5. The former Specification 7.4 has been eliminated, but provisions for control of contamination and radiation have been incorporated in Specification 5.6. Former Specification 7.5 has been renumbered to 7.2.

CHANGE NO. 18

COPY

December 22, 1972

Docket No. 50-201

Nuclear Fuel Services, Inc.
ATTN: Mr. J. R. Clark, Manager
Environmental Protection
and Licensing
6000 Executive Boulevard, Suite 600
Rockville, Maryland 20852

and

New York Atomic and Space
Development Authority
ATTN: Mr. James Cline
General Manager
230 Park Avenue
New York, New York 10017

Change No. 18
License No. CSF-1

Gentlemen:

This refers to the NFS request dated July 19, 1972, for changes to the Technical Specifications of Provisional Operating License No. CSF-1. The modifications requested constitute a general updating of specifications to reflect plant modifications and operational changes based on operating experience or to reflect changes in the bases of specifications. In addition, one new specification (6.11, Solvent Analysis) has been added. We have designated these changes as Change No. 18.

A few minor modifications to both new and old specifications were necessary for consistency. We have included these modifications in Change No. 18.

We have reviewed the information from Nuclear Fuel Services, Inc., and have determined that the requested changes in Technical Specifications, including Commission modifications, do not present significant hazards considerations not described or implicit in the NFS Final Safety Analysis Report and that there is reasonable assurance that the health and safety of the public will not be endangered.

COPY

COPY

Therefore, pursuant to Section 50.59 of 10 CFR 50, changes to the Technical Specifications of Provisional Operating License CSF-1 are authorized as shown in the following table and as set forth on the enclosed pages:

Technical Specifications Authorized by Change 18		Superseded Technical Specifications	
Specification Number	Page Number	Specification Number	Page Number
0.0	1-2	1.0-1.4	1-2
1.0-1.4	3-4a	2.0	3-4
2.0	4b-4d	3.1.2-3.3	6-8
3.0	4c	4.0	11
3.1.2-3.3	6-9		
4.0	11		
4.7	28-29	4.7	28-29
4.9	33-34	4.9	33-34
4.12	40	4.12	40
4.13	41-42	4.13	41-42
4.15	42b	4.15	42b
4.16	42c-42d	5.0	43
5.0	43		
5.2	47-51a	5.2	47.51
5.5	55a	6.0	56

COPY

COPY

Specification Number	Page Number	Specification Number	Page Number
5.6	55b-55c		
6.0	56		
		6.2	59
6.2	59		
6.6	64	6.6	64
6.7	65-65a	6.7	65
6.11	68c		
7.0	69		
		7.0	69
7.2	73		
		7.2	73-74
		7.3	75
		7.4	-

FOR THE ATOMIC ENERGY COMMISSION

(Original signed by
R. B. Chitwood)
R. B. Chitwood, Chief
Fuel Fabrication and Reprocessing
Directorate of Licensing

COPY

APPENDIX A

NUCLEAR FUEL SERVICES, INC.
AND
NEW YORK STATE ATOMIC AND SPACE DEVELOPMENT AUTHORITY

IRRADIATED NUCLEAR FUEL PROCESSING PLANT

TECHNICAL SPECIFICATIONS
LICENSE CSF-1

Table of Contents

0.0 INTRODUCTION

1.0 PLANT DESCRIPTION SUMMARY

- 1.1 Location of Site
- 1.2 Location of Plant
- 1.3 Flow of Material Through the Plant
- 1.4 Auxiliary Systems

2.0 DEFINITIONS

3.0 AUTHORIZED MATERIALS

- 3.1 Nuclear Fuel
- 3.2 Unirradiated Source Materials
- 3.3 Calibration, Laboratory Standard and Test Material

4.0 SAFETY LIMITS

- 4.1 Radioactivity Content of Released Gaseous Effluents
- 4.2 Radioactivity Content of Released Liquid Effluents
- 4.3 Storage Canister Loading and Spacing
- 4.4 Dissolver Charging
- 4.5 Feed Solution Concentration
- 4.6 Fissionable Isotope Concentration in Solvent Extraction
- 4.7 Extractant Concentration
- 4.8 Uranium Product Solution Storage
- 4.9 Plutonium Ion Exchange Operation
- 4.10 Plutonium Solution Storage

Table of Contents (continued)

4.11 Rework Solution Concentration
4.12 Caustic Concentration in Carbon Steel Waste Storage Tanks
4.13 Solid Radioactive Waste Burial
4.14 Exhaust Filter Differential Pressure
4.15 Evaporator Steam Pressure
4.16 Respiratory Protection Equipment

5.0 MINIMUM CONDITIONS FOR OPERATION

5.1 Effluent and Environmental Monitoring
5.2 Process Instrumentation
5.3 Ventilation
5.4 Spare Waste Storage Capacity
5.5 High Radiation Area Access
5.6 Contamination and Radiation Control

6.0 SURVEILLANCE REQUIREMENTS

6.1 Boron Raschig Rings
6.2 Sump Alarms and Eductors
6.3 Waste Storage Tank Pan Instrumentation
6.4 Emergency Utility Equipment
6.5 Air Filtration Equipment
6.6 Dissolver Dilution Air
6.7 Boric Acid
6.8 Blanking-Off and Locking-Out
6.9 Water Activity Alarms
6.10 Poisoned Dissolver Baskets
6.11 Solvent Analysis

7.0 ADMINISTRATIVE REQUIREMENTS

7.1 Administrative Requirements
7.2 Category 10 Fuels Operating Procedures

0.0 INTRODUCTION

These Technical Specifications identify the significant design features, operating conditions and operating limitations which are considered important in providing reasonable assurance that the facility will be operated without undue hazard to the health and safety of either the public or plant personnel. The Technical Specifications have been grouped in seven sections whose purposes are described below.

A summary description of the processing facility is provided in Section 1.0 to aid the presentation of the Technical Specifications. Details of the facility layout, plant design, process, equipment design, methods of protecting plant personnel, methods of protecting the public and plant operation are presented in the Final Safety Analysis Report for the Nuclear Fuel Services Fuel Reprocessing Plant.

Technical terms which are commonly used at the processing plant but which may be ambiguous are defined in Section 2.0 in order to clearly indicate the intent of the various Technical Specifications.

The types and quantities of source, special nuclear and byproduct material which can be safely stored and utilized at the plant are identified in Section 3.0. These nuclear materials include irradiated fuel, unirradiated fuel for checkout or processing operations, calibration sources and laboratory standards.

The limits established in Section 4.0 define the boundaries of safe operation yet permit the flexibility essential to chemical processing. The limits have been set above the values required by normal operation but well below the values at which an accident could occur or the public safety could be jeopardized.

Unlike a nuclear reactor which is designed to operate in a critical region, a chemical processing plant is designed and operated in such a way as to remain subcritical at all times. No single malfunction can lead to nuclear criticality. Secondary controls are installed to provide compensation in the event of the failure of a primary control. In addition, administrative controls are imposed to further assure the safe operation of the facility. For these reasons, if the specifications in Section 4.0, other than those for gaseous effluents are exceeded, shutdown is not mandatory. If such an

occasion arises, plant operations may continue in a "ready condition" until normal operations are restored; however, if during this period there is any occurrence that would further reduce the margin of safety, an immediate shutdown is required. If the specifications for gaseous effluents are exceeded, processing operations will be shut down and immediate corrective action will be taken.

The specifications included in Section 5.0 set forth minimum conditions for safe plant operation. If specifications for monitoring gaseous and liquid effluents cannot be fulfilled, the operations which could cause a release of radioactive effluents must be shut down, with the exception of the main ventilation system which would normally remain in operation. Other specifications in Section 5.0 indicate primary and alternate conditions which may be fulfilled. If the alternate condition is in use the operations shall be considered to be continuing in a "ready condition." If neither primary nor alternate conditions for a particular operation can be fulfilled, the operations shall be shut down with the exception of the waste tank off-gas system, which must be in operation while appropriate repairs are made.

The specifications listed in Section 6.0 require inspections of certain equipment or systems which, with one exception, are not primary safeguards but which are desirable for a defense in depth if a primary safeguard fails. The lone exception is Specification 6.1.1 requiring surveillance of the boron glass Raschig rings which are a primary safeguard in the high enriched uranium product storage tanks and the off-specification plutonium product storage tank. Surveillance requirements under Specification 6.1.1 conform to the proposed ANS standard Use of Borosilicate-Glass Raschig Rings as a Fixed Neutron Absorber in Solution of Fissile Materials. The other specifications in this section focus attention on controls which, while not primary safeguards, are of sufficient importance that immediate and continuing action should be made toward returning the failed component to service. If inspection required by Specification 6.2 through 6.10 reveals the inoperability of any of the specified equipment, plant operation may continue under "ready condition."

Section 7.0 identifies the administrative requirements, i.e., organization, standard procedures and reviews, etc., deemed necessary for safe operation.

SECTION 1.0

PLANT DESCRIPTION

Page withheld as containing

Export Controlled Information

Page withheld as containing

Export Controlled Information

SECTION 2.0

DEFINITIONS

2.0 DEFINITIONS

Term	Definition
Assembly	A group of elements or subassemblies combined in a structural unit. The assembly is usually that fuel structure which is removed from the reactor as an individual unit.
Area	A portion of the plant which is described by physical boundaries for identification and communication purposes.
Blank-Off	A removable barrier is inserted that prevents flow in a pipe.
Campaign	The processing of a defined amount of similar nuclear fuel under a specific Letter of Authorization and Run Plan with a material inventory at the beginning and end.
Concentration Control	A technique used to assure nuclear safety that limits the concentration of fissile isotopes in process and product solutions.
Favorable Geometry	A geometry which is nuclearly safe for all credible concentrations of fissile material.
Fixed Neutron Absorber	A tank or vessel equipped with neutron absorbers that will not drain away, i.e., borosilicate glass Raschig rings or boron stainless steel Raschig rings
Fissile Isotopes	The fissile isotopes are uranium-233, uranium-235, plutonium-239, and plutonium-241.
Gross Count	Total alpha, beta or gamma radioactivity not classified according to specific isotope.
Locked-Out	A control switch or valve handle is fixed in either the opened or closed position by one or more padlocks or seals. The lock may be removed only by the originator or a supervisor of equal or higher authority.

Term	Definition
MPC	The maximum permissible concentration of radioactivity in air or water to which an individual may be exposed for a specified period without exceeding regulatory limits for radiation protection.
Neutron Absorber (Poison)	A material having a high probability for capturing neutrons, e.g., boron and cadmium.
Ready Condition	A temporary condition of operation using prescribed alternate instrumentation and controls or additional administrative safeguards while immediate action is being taken to restore normal operation.
Routine Entry Areas	A plant area to which entry is routinely scheduled for at least daily.
System	An integrated series of equipment and piping in which a specific function or operation is carried out.
U-235 Equivalent Concentration	A method of evaluating fissile material on the same basis. The formulation is not applicable to systems that depend upon geometrical control. U-235 equivalent concentration (g/l) = 1.66 x Pu concentration (g/l) + 1.66 x U-233 concentration (g/l) + 1.00 x U-235 concentration (g/l). For this purpose, all plutonium is considered fissile and the U-235 concentration is assigned as that of the maximum pre-irradiation enrichment unless the isotopic concentrations are determined by analyses.

SECTION 3.0

AUTHORIZED MATERIALS

Page withheld as containing

Export Controlled Information

Page withheld as containing

Export Controlled Information

Page withheld as containing

Export Controlled Information

Page withheld as containing

Export Controlled Information

SECTION 4.0

SAFETY LIMITS

Page withheld as containing

Export Controlled Information

Requirements for analysis of the solvent phase for TBP content are given in technical specification 6.11.

The consequence of exceeding this specification is to reduce the margin of safety in preventing accidental criticality.

Page withheld as containing

Export Controlled Information

Page withheld as containing

Export Controlled Information

4.12 CAUSTIC CONCENTRATION IN CARBON STEEL WASTE STORAGE TANKS

Applicability

This specification applies to the concentration of caustic in the carbon steel waste storage tanks.

Objective

To assure that the liquid waste in carbon steel waste storage tanks shall be maintained in alkaline condition at all times to prevent excessive corrosion of the tanks.

Specification

4.12.1 EXCESS CAUSTIC (BASED ON THE STOICHIOMETRIC AMOUNT REQUIRED TO NEUTRALIZE ACIDIC WASTE) IN THE CARBON STEEL HIGH LEVEL WASTE STORAGE TANKS SHALL BE PRESENT IN CONCENTRATION OF (A) AT LEAST 10% BASED ON THE WASTE VOLUME INTRODUCED THEREIN UNTIL THE TOTAL VOLUME OF INTRODUCED WASTE EXCEEDS 10,000 GALLONS, (B) AT LEAST 5% ON THE SAME BASIS UNTIL THE TOTAL VOLUME OF INTRODUCED WASTE EXCEEDS 100,000 GALLONS AND (C) AT LEAST 1% ON THE SAME BASIS AFTER THE VOLUME OF INTRODUCED WASTE EXCEEDS 100,000 GALLONS.

Basis

The carbon steel high level waste storage tanks are not suitable, from a corrosion viewpoint, for storage of acidic wastes. To prevent introduction of acidic wastes, the normally acidic wastes are neutralized prior to transfer into the storage tank. As an additional safety precaution, the solution in the storage tank will always contain excess caustic so that inadvertent addition of unneutralized waste would not result in accelerated tank corrosion.

4.13 SOLID RADIOACTIVE WASTE BURIAL

Applicability

This specification applies to the transfer and storage of solid radioactive waste material resulting from the separation, in the reprocessing plant, of nuclear material from nuclear fuel. This specification also applies to the burial of contaminated plant equipment if buried in the same area as separation waste.

Objective

To assure that activity associated with buried waste does not migrate from the burial area.

Specification

4.13.1 SOLID RADIOACTIVE WASTE GENERATED BY THE OPERATION OF THE PLANT SHALL BE BURIED COMPLETELY WITHIN SILTY TILL. BEFORE A NEW EXCAVATION IS USED, IT WILL BE INSPECTED TO ASSURE THAT IT IS FULLY WITHIN THE SILTY TILL FORMATION. BURIAL SHALL BE RESTRICTED TO THE PLANT AREA DRAINED BY QUARRY CREEK AND ERDMAN BROOK. NO BURIAL OF WASTE SHALL BE NEARER THAN 100 FEET TO THE CREST OF THE DEFILES IN WHICH QUARRY CREEK AND ERDMAN BROOK FLOW. THE MINIMUM COVER OF SILTY TILL OVER THE WASTE SHALL BE FOUR FEET AS MEASURED DOWN FROM THE TOP OF THE UNDISTURBED SILTY TILL STRATUM. EROSION IN THE DEFILES, BETWEEN THESE DEFILES AND BURIAL AREAS AND OF THE EARTH COVER AFTER THE EXCAVATIONS HAVE BEEN FINALLY BACKFILLED SHALL BE MINIMIZED.

4.13.2 THE LOCATION AT WHICH RADIOACTIVE SOLID WASTES ARE BURIED IN ACCORDANCE WITH SPECIFICATION 4.13.1 SHALL BE MARKED WITH CONCRETE CAIRNS. A PLOT SHOWING THE APPROXIMATE LOCATION OF ALL WASTE BURIED SHALL BE MAINTAINED ACCOMPANIED BY AN INDEX DESCRIBING THE GENERAL TYPES OF WASTE BURIED AT EACH LOCATION INCLUDING THE DATES OF BURIAL AND CLOSURE. DUPLICATE RECORDS OF BURIALS SHALL BE MAINTAINED IN SEPARATE LOCATIONS.

4.13.3 SOLID RADIOACTIVE WASTE TO BE BURIED SHALL BE PLACED IN PACKAGES WHICH PREVENT DISPERSION OF CONTENTS AND PREVENT CONTAMINATION OF HANDLERS. IF A PACKAGE IS RUPTURED WHEN PLACED IN THE TRENCH, EARTH OVERFILL SHALL BE IMMEDIATELY PLACED OVER THE RUPTURED PACKAGE.

(Change No. 18)

4.13.4 FUEL ELEMENTS SHALL NOT BE BURIED.

Basis

Nuclear Fuel Services operates two waste burial areas at the West Valley site. One area is for plant generated waste and is licensed under the regulations of the U.S. Atomic Energy Commission. The other area is primarily for waste generated at facilities other than the processing plant and is licensed under the regulations of the State of New York. This specification applies to the burial area subject to USAEC licensing and regulations.

As discussed in paragraphs 4.90, 7.14, 7.15, 7.16, and 7.17 of the Safety Analysis, the ion exchange and permeability data for the soil in which the radioactive waste is to be buried indicate that the radioactivity will be retained in the immediate vicinity of the source. Further, the low permeability of the silty till will delay any possible seepage so that the longest lived ruthenium isotope, an element which has relatively poor ion exchange properties with the soil, would undergo nearly complete radioactive decay before it could traverse 100 feet of this soil to an adjacent water course.

Erosion of the stream defiles, the banks between the streams and the burial area and the burial area itself shall be minimized by grading, planting or liquid flow control.

Buried wastes are covered with four feet of silty till to provide shielding, to prevent water flow into the burial holes and, through ion-exchange action, to prevent activity from moving to the surface.

The provision of markers and records of burial on state owned property serves to facilitate perpetual care and precludes inadvertent excavation of radioactive material. Records are maintained at the plant site and by the New York State Atomic and Space Development Authority so that no single accident or act of nature would destroy both sets of records.

4.15 EVAPORATOR STEAM PRESSURE

Applicability

This specification applies to the steam pressure which may be used in process and waste evaporators.

Objective

To prevent rapid exothermic degradation reactions of organic materials that could be present in process or waste evaporators.

Specification

4.15.1 THE STEAM APPLIED TO PROCESS AND WASTE EVAPORATORS, OTHER THAN THE FOLLOWING, FOR HEATING SOLUTIONS SHALL NOT BE ADMITTED AT A PRESSURE EXCEEDING 25 PSIG.

EVAPORATOR	IDENTIFICATION
GENERAL PURPOSE	7C-5
ACID FRACTIONATOR FEED VAPORIZER	7E-1
ACID FRACTIONATOR FEED REBOILER	7E-2

Basis

"Red Oil" an organic phase mixture of uranyl nitrate, tributyl phosphate, dibutyl phosphate, and other organic decomposition products can be formed under certain conditions if organic products are carried over into an evaporator and allowed to concentrate. "Red Oil" has been found to be temperature sensitive and can explode at temperatures exceeding approximately 274°F. While this material can be formed only under a series of unusual maloperations of the process, absolute protection from the possibility of explosion is provided by limiting the pressure of the steam supplied to the evaporators to that corresponding to a temperature below 267°F.

The General Purpose Evaporator, the Acid Fractionator Feed Vaporizer and the Acid Fractionator Feed Reboiler are excluded from the steam pressure limitation because feed streams to these units do not come in contact with organic solvents and therefore no "red oil" will form in the units and no explosion hazard exists.

The consequence of failing to meet the requirements of this specification is to reduce or remove the margin of safety provided to prevent a possible "red oil" explosion.

(Change No. 18)

4.16 RESPIRATORY PROTECTION EQUIPMENT

Applicability

This specification applies to protection of plant personnel from airborne concentrations of radioactive material exceeding the maximum permissible concentrations given in 10 CFR 20 for restricted areas.

Objective

To assure that plant personnel, utilizing respiratory protection equipment, will not inhale excessive quantities of radioactive material.

Specification

4.16.1 FULL FACE RESPIRATORS APPROVED FOR RADIOACTIVE MATERIALS UNDER BUREAU OF MINES SCHEDULE 21B, SHALL BE USED WHEN THE CONCENTRATION OF AIRBORNE RADIOACTIVITY IN THE AREA TO BE OCCUPIED IS EXPECTED TO EXCEED THE CONCENTRATIONS SHOWN IN TABLE I, APPENDIX B OF 10 CFR 20, BUT IS EXPECTED TO BE LESS THAN 100 TIMES SUCH CONCENTRATIONS.

4.16.2 SELF-CONTAINED BREATHING APPARATUS SATISFYING THE BUREAU OF MINES SCHEDULE 13E REQUIREMENTS OR SUPPLIED AIR RESPIRATORS SATISFYING THE BUREAU OF MINES SCHEDULE 19B SHALL BE USED WHEN THE CONCENTRATION OF AIRBORNE RADIOACTIVITY IN THE AREA TO BE OCCUPIED IS EXPECTED TO EXCEED 100 TIMES, BUT IS EXPECTED TO BE LESS THAN 10,000 TIMES, THE CONCENTRATIONS SHOWN IN TABLE I, APPENDIX B OF 10 CFR 20.

4.16.3 PRIOR TO EACH ENTRY INTO A CONTAMINATED ATMOSPHERE, INDIVIDUALS WEARING RESPIRATORY PROTECTION SHALL CHECK THE MASKS FOR FIT AND LEAKAGE.

4.16.4 FOLLOWING EACH USE, RESPIRATORY PROTECTION MASKS SHALL BE RETURNED FOR DECONTAMINATION UNDER APPROVED HEALTH AND SAFETY PROCEDURES. WHEN THE CLEANING AND REPAIR HAS BEEN APPROVED BY HEALTH AND SAFETY PERSONNEL, MASKS SHALL BE PACKAGED INDIVIDUALLY IN PLASTIC BAGS AND DELIVERED FOR REUSE WITH CLEAN CLOTHING SUPPLIES.

4.16.4.1 MASKS SHALL NOT BE RELEASED FOR REUSE IF FIXED RADIOACTIVE CONTAMINATION EXCEEDS 100 CPM BETA/PROBE AREA OR 100 CPM

ALPHA/PROBE AREA ON SURFACES EXPOSED TO THE PERSON, OR 500 CPM BETA/PROBE AREA AND 100 CPM ALPHA/PROBE AREA ON EXTERNAL SURFACES NOT IN CONTACT WITH THE PERSON.

4.16.4.2 FILTER CANISTERS FOR MASKS SHALL NOT BE RELEASED IF RADIOACTIVE CONTAMINATION EXCEEDS EITHER 100 CPM ALPHA/PROBE AREA OR 500 BETA/PROBE AREA AT CONTACT.

Basis

The Maximum Permissible Concentrations (MPC) shown in Table I Appendix B of 10 CFR 20 are the concentrations of airborne radioactivity that a worker could breathe throughout his forty hour work week and not inhale excessive radioactivity. As a routine procedure, NFS requires that if plant personnel may be exposed to such concentrations, no matter how short the exposure time, appropriate respiratory protection must be worn. As additional protection, NFS limits the use of filter masks to use in airborne concentrations which are expected to be less than 100 times the MPC concentration even though the high efficiency filters used provide a protection factor of at least 100.

For use in airborne concentrations exceeding 100 times MPC (or a lower concentration identified in the NFS Health and Safety Manual), NFS requires the use of continuous flow supplied air equipment which is approved by the Bureau of Mines, a recognized authority in respiratory protection. Additional protection is afforded by an in-line filter, which would be used during an emergency exit in the unlikely loss of supplied air.

The protection factors of 100 for filter masks and 10,000 for supplied air or self contained breathing apparatus correspond to those given in proposed Appendix E to 10 CFR Part 20.

The contamination limits for reuse of masks and mask canisters are consistent with the limitations for uncontaminated plant areas (Zone II) and are expressed in radiation units used at the plant. Specifications 4.16.4.1 and 4.16.4.2 are based upon (1) a 20% counting efficiency and 50 cm^2 probe area for beta monitoring and (2) a 50% counting efficiency and 75 cm^2 probe area for alpha monitoring.

SECTION 5.0

MINIMUM CONDITIONS FOR OPERATION

Page withheld as containing

Export Controlled Information

Page withheld as containing

Export Controlled Information

Page withheld as containing

Export Controlled Information

Page withheld as containing

Export Controlled Information

Page withheld as containing

Export Controlled Information

Page withheld as containing

Export Controlled Information

5.5 HIGH RADIATION AREA ACCESS

Applicability

This specification applies to alternatives that may be used in lieu of the control devices specified in 10 CFR Part 20.203(c)(2).

Objective

To assure that personnel do not inadvertently enter areas where the radiation exposure potential may be significant.

Specification

5.5.1 LOCKED DOOR SHALL BE USED TO CONTROL ADMITTANCE TO HIGH RADIATION AREAS WHERE AN INDIVIDUAL MIGHT RECEIVE A DOSE IN EXCESS OF 100 MILLIREM IN ONE HOUR. POSSESSIONS OF KEYS TO THESE LOCKS SHALL BE LIMITED TO NFS SUPERVISORY PERSONNEL.

5.5.2 IN PLANT AREAS WHICH CANNOT OR SHOULD NOT BE LOCKED, A SYSTEM OF STANTIONS CONNECTED BY ROPES WITH "HIGH RADIATION AREA" SIGNS ATTACHED SHALL BE USED TO OBSTRUCT ALL ACCESSIBLE SIDES OF A HIGH RADIATION AREA.

Basis

10 CFR 20.203 requires that a means be provided to warn personnel when they enter areas where the radiation exposure potential may be significant. The above procedures conform with the intent of 10 CFR 20. Some areas of the plant such as staircases that are necessary for evacuation purposes have high radiation levels periodically. Since these areas cannot be readily locked and for safety reasons should not be locked the method described in this specification is used to alert personnel to high radiation areas so that they will not unintentionally enter these areas.

5.6 CONTAMINATION AND RADIATION CONTROL

Applicability

This specification applies to the allowable maximum radiation and removable contamination limits for routine entry areas.

Objective

To maintain adequate radiological conditions for the protection of the health and safety of plant personnel.

Specification

5.6.1 IRRESPECTIVE OF THE USE OF PROTECTIVE CLOTHING, MAINTENANCE OF CONTAMINATED ZONE BOUNDARIES, AND THE APPLICATION OF EXISTING TECHNIQUES IN ACCORDANCE WITH PLANT PROCEDURES, CONTAMINATION AND RADIATION LEVELS IN ROUTINE ENTRY AREAS SHALL BE REDUCED TO BELOW THE FOLLOWING LEVELS WITHIN SEVEN DAYS AFTER DETECTION AND THE SOURCE OF CONTAMINATION OR RADIATION SHALL BE IDENTIFIED AND CONTROLLED.

REMOVABLE CONTAMINATION

BETA, DPM/100cm^2	50,000
ALPHA, DPM/100cm^2	500

RADIATION

MAJOR PORTION OF BODY, MREM/HR	100

IF THE ABOVE REDUCTION IS NOT ACHIEVED IN THE TIME GIVEN, (A) THE PROCESSING OPERATION REQUIRING ACCESS TO THE AREA SHALL BE DISCONTINUED UNTIL THE CONTAMINATION OR RADIATION SOURCE IS IDENTIFIED AND CONTROLLED AND CONTAMINATION AND RADIATION LEVELS ARE REDUCED TO BELOW THE ABOVE LIMITS AND (B) THE USAEC DIRECTORATE OF REGULATORY OPERATIONS SHALL BE NOTIFIED WITHIN 48 HOURS.

5.6.2 THE FOLLOWING AREAS ARE EXEMPT FROM 5.6.1: CASK HANDLING AND SERVICE BRIDGE AREAS OF THE FUEL RECEIVING AND STORAGE AREA, SCRAP REMOVAL ROOM, HOT SHOP, WASTE BURIAL AREA, OFF-GAS BLOWER ROOM AND EXTRACTION CHEMICAL ROOM (RECOVERED ACID AREA).

(Change No. 18)

5.6.3 WHEN WORK INVOLVING FUEL UNLOADING OR STORAGE OR CASK DECONTAMINATION IS NOT IN PROGRESS IN THE FOLLOWING AREAS OF THE FUEL RECEIVING AND STORAGE AREA, DECONTAMINATION SHALL BE STARTED WITHIN 12 HOURS OF THE END OF WORK AND THE AREAS SHALL BE DECONTAMINATED TO BELOW THE FOLLOWING LEVELS:

AREA	MAXIMUM PERMISSIBLE CONTAMINATION LEVELS ALPHA, DPM/100 CM^2	BETA DPM/100 CM^2
Service Bridges	500	50,000
Cask Decontamination Area	500	500,000

Basis

The level of removable contamination in routine work areas is determined at least daily by operations personnel. In addition, the areas are surveyed at least weekly by health and safety personnel.

The levels of contamination given in Specification 5.6.1 reflect the removable contamination levels which if exceeded could cause the airborne radioactivity to exceed the maximum permissible concentrations for 40-hours per week exposure. The limits are based on Plutonium-239 and Strontium-90. The radiation level given distinguishes between high radiation areas (Specification 5.5) and other plant areas.

Plant areas named in Specification 5.6.2 are expected from the specified limits because the operations and work performed in these areas result in localized levels of contamination or radiation in excess of the specified limits. Personnel entering these areas wear respiratory protection equipment appropriate for the contamination level and work is done under authorized special procedures.

The pool service bridge and cask decontamination areas may become contaminated above the limits given in 5.6.1 while work is performed in the areas. The areas are separated from access areas by rope barriers and step-off pads. Personnel leaving the areas are required to survey themselves following removal of the outer work clothing. The procedures are designed to prevent the spread of contamination to other plant areas. When not in use, the areas are to be decontaminated to the limits specified in 5.6.2 to prevent spread of airborne contamination.

The program recognizes that contamination or radiation problems will periodically occur through human or mechanical failure or because of the nature of the operations to be performed yet puts due emphasis on [illegible].

(Change No. 18)

SECTION 6.0

SURVEILLANCE REQUIREMENTS

Page withheld as containing

Export Controlled Information

Page withheld as containing

Export Controlled Information

Page withheld as containing

Export Controlled Information

Page withheld as containing

Export Controlled Information

Page withheld as containing

Export Controlled Information

ADMINISTRATIVE REQUIREMENTS

Page withheld as containing

Export Controlled Information

CHANGE NO. 19

UNITED STATES
ATOMIC ENERGY COMMISSION
WASHINGTON, D.C. 20545

COPY

September 11, 1973

L:FFRB:EJF
(50-201)

Nuclear Fuel Services, Inc.
ATTN: Mr. J. R. Clark, Manager
Environmental Protection
and Licensing
6000 Executive Boulevard
Suite 600
Rockville, Maryland 20852

and

New York Atomic and Space
Development Authority
ATTN: Mr. James Cline
General Manager
230 Park Avenue
New York, New York 10017

Change No. 19
License No. CSF-1

Gentlemen:

This refers to the NFS request dated July 3, 1973, for a change to Technical Specifications of Provisional Operating License No. CSF-1. The proposed change to Specification 4.3 storage canister loading and spacing requests authorization to modify the storage configuration of fuel from Commonwealth Edison Company's Dresden I Reactor at the Fuel Receiving and Storage Area of the NFS Reprocessing Plant at West Valley, New York.

We have performed a nuclear safety analysis in connection with our review of the information submitted by Nuclear Fuel Services, Inc. and have determined that the change in the Technical Specification designated as Change No. 19 and set forth on enclosed pages 17 and 18 does not present a significant hazards considerations not described or implicit in the NFS Final Safety Analysis Report, and that there is reasonable assurance that the health and safety of the public will not be endangered.

COPY

COPY

A copy of the Safety Evaluation by the Fuels and Materials Branch, Directorate of Licensing, relating to Change No. 19 is enclosed.

Accordingly, pursuant to Section 50.59 of Title 10 Code of Federal Regulations, Part 50, the change in Technical Specification 4.3 of Provisional Operating License No. CSF-1 is authorized.

FOR THE ATOMIC ENERGY COMMISSION

L. C. Rouse, Chief
Fuel Fabrication and Reprocessing
Branch
Directorate of Licensing

Enclosures:
1. Pages 17 and 18
2. Copy of Safety Evaluation

COPY

4.3 STORAGE CANISTER LOADING AND SPACING

Applicability

This specification establishes limits governing fuel distribution in the Storage Pool.

Objective

To assure that individual units and arrays of units are maintained in subcritical configuration.

Specification

4.3.1 IRRADIATED NUCLEAR FUEL IN THE FUEL STORAGE POOL SHALL BE STORED IN CANISTERS.

4.3.2 THE QUANTITY OF FUEL STORED IN A CANISTER SHALL BE LIMITED SO THAT THE EFFECTIVE NEUTRON MULTIPLICATION FACTOR (k_{eff}) SHALL NOT EXCEED 0.85 BASED ON UNIRRADIATED FUEL. THE PRECISION OF THE k_{eff} CALCULATION SHALL BE CONFIRMED BY APPLYING THE CALCULATIONAL METHOD TO KNOWN CRITICAL SYSTEMS OF SIMILAR FUEL MATERIAL.

4.3.3 IN LIEU OF DETERMINING THE k_{eff} OF A CANISTER LOADING, ANY SINGLE FUEL ASSEMBLY OR PACKAGE WHICH HAS BEEN STORED UNDER WATER PRIOR TO SHIPMENT MAY BE STORED IN A CANISTER, PROVIDED THE GEOMETRY OF THE ASSEMBLY OR PACKAGE IS NOT REARRANGED.

4.3.4 CANISTERS SHALL BE SPACED TO PROVIDE A MINIMUM OF 12 INCHES OF WATER BETWEEN FUEL CONTAINED IN ADJACENT CANISTERS EXCEPT AS PROVIDED BELOW.

4.3.4.1 CANISTERS CONTAINING THREE OR LESS FUEL ASSEMBLIES FROM THE DRESDEN-1 REACTOR SHALL BE SPACED TO PROVIDE AT LEAST 7.25 INCHES OF WATER BETWEEN ADJACENT CANISTERS.

4.3.4.2 THOSE CANISTERS CONTAINING BONUS SUPERHEATER FUELS SHALL BE SPACED TO PROVIDE AT LEAST 8 INCHES OF WATER BETWEEN ADJACENT CANISTERS CONTAINING SUPERHEATER FUEL AND AT LEAST 12 INCHES OF WATER BETWEEN CANISTERS CONTAINING SUPERHEATER AND THOSE CANISTERS CONTAINING OTHER TYPES OF FUEL.

Bases

The Fuel Receiving and Storage Area (FRS) has been designed to permit the handling of fuel assemblies such that geometry and administrative control prevents the interaction of one fuel assembly with another. These precautions are necessary since the FRS will at most times contain fuel in excess of that necessary to result in a criticality if placed in optimum array.

The storage racks and canisters provide a minimum edge to edge spacing of eight inches between adjacent canisters and a minimum edge to edge spacing of twelve inches between the fuel contained in adjacent canisters. This separation of twelve inches of water prevents significant interaction of neutrons and provides a safe array.

A k_{eff} less than 0.85 provides a reasonable margin of safety to account for uncertainty in calculations and error in the identification of the fissile material content. By comparing the calculative method with known critical systems of similar fuel material, uncertainties in the method are minimized.

Individual fuel elements or packages previously stored under water have been demonstrated as safe and, therefore, no further calculations are deemed necessary provided that 12 inches is maintained between fuel in adjacent canisters in storage.

Administrative procedures are established to assure correct canister loadings. The decreased water spacings permitted for Dresden canned fuel and BONUS superheater fuel have been shown to be nuclearly safe in NFS letters to USAEC Division of Materials Licensing dated April 28, 1965, January 22, 1969, and July 3, 1973.

The consequence of exceeding this specification would be to decrease the margin of safety for the prevention of criticality. In Paragraphs 7.33, 7.34 and 8.29 of the Safety Analysis it has been assumed that despite all design efforts, a criticality incident somehow does occur. The consequences of such an unlikely event have been analyzed and show that neither operating personnel nor the general public would be injured as a result.

The action to be taken to correct an exceeding of this specification is to take immediate steps to increase spacing of fuel in storage or decrease canister loading.

SAFETY EVALUATION

BY

FUEL FABRICATION AND REPROCESSING BRANCH

DIRECTORATE OF LICENSING

NUCLEAR FUEL SERVICES, INC.

DOCKET NO. 50-201

STORAGE CANISTER LOADING AND SPACING

By letter dated July 3, 1973, Nuclear Fuel Services, Inc. submitted an application requesting a change in Technical Specification 4.3 to permit modification of the storage configuration of fuel from Commonwealth Edison Company's Dresden I Reactor at the Fuel Recovery and Storage Area of the NFS Reprocessing Plant at West Valley, New York.

Technical Specification 4.3 Storage Canister Loading and Spacing establishes limits governing fuel distribution in the storage pool to assure that individual units and arrays of units are maintained in a subcritical configuration. The application requests authorization to reduce the minimum separative distance between fuel canisters containing up to three Dresden I Fuel Assemblies from 9.6 inches to 7.25 inches of water.

We have reviewed the information submitted by the applicant and have compared it with our own independent analysis. Our analysis indicates that interaction between canisters even with the closer spacing will be

slight and that the proposed storage arrangement will be adequately safe with regard to nuclear criticality. A copy of the summary of the analysis (memorandum Szempruch to Rouse, August 3, 1973) is attached. We conclude that amending the Technical Specification 4.3 to permit storage of Dresden I fuel assemblies as described in the application will not present a significient hazards consideration and that there is reasonable assurance that the health and safety of the public will not be endangered.

Approval of the attached Change No. 19 to the Technical Specification of License No. CSF-1 is recommended.

Signed:

E. J. Frederick
Fuel Fabrication and Reprocessing Branch
Directorate of Licensing

Approved:

L. C. Rouse, Chief
Fuel Fabrication and Reprocessing Branch
Directorate of Licensing

Docket file
50-201

UNITED STATES
ATOMIC ENERGY COMMISSION
WASHINGTON, D.C. 20545

AUG 3 1973

L. C. Rouse, Chief
Fuel Fabrication and Reprocessing
Branch
THRU: R. E. Chitwood, Chief
Technical Support Branch

NUCLEAR CRITICALITY SAFETY REVIEW OF NFS APPLICATION DATED JULY 3, 1973 TO REDUCE CANISTER SPACING REQUIREMENTS IN STORAGE POOL, DOCKET 50-201

This memorandum is written in response to your request for review of the criticality safety aspects of the subject application.

Using the calculated geometric buckling for a square array of four assemblies, the K_{eff} was found to be 0.90 for unclad rods at optimum moderation which compares well with the applicant's values of 0.637 and 0.782 for two and three assemblies per canister respectively. The individual canisters loaded with two or three assemblies are well subcritical. Interaction between canisters separated by 7.25 inches of water is expected to be slight. A conservative interaction calculation for two infinite slabs was used to verify this. Values of K_{eff} of .81 and .94 were calculated for systems of two infinite slabs of fuel assemblies separated by 7.25 inches of water. Slab thicknesses of 4.27 and 6.40 inches representing loadings of two and three assemblies per canister were used.

It is concluded that amending the applicant's license to permit storage of Dresden-I fuel assemblies as described in the application will not introduce any nuclear safety hazard not previously addressed in the FSAR for the NFS Reprocessing Plant.

R. W. Szempruch
Technical Support Branch

cc: W. A. Nixon

Nuclear Fuel Services, Inc. 6000 Executive Boulevard, Suite 600, Rockville, Maryland • 208
A Subsidiary of Getty Oil Company (301) 424-17

DOCKET NO. 50-201

July 19, 1972

Mr. S. H. Smiley, Deputy Director
Fuels and Materials
Directorate of Licensing
U. S. Atomic Energy Commission
Washington, D. C. 20545

Dear Mr. Smiley:

During the last several years, NFS personnel and members of the Fuel Fabrication and Reprocessing Branch have reviewed the Technical Specifications for the NFS Reprocessing Plant at West Valley, New York, with the goal of clarifying the specifications to facilitate both compliance and inspection. These reviews have resulted in the approval of several changes.

Based upon recent discussions and reviews, Nuclear Fuel Services, Inc. hereby requests approval of the attached revisions to the Technical Specifications. We believe that the proposed changes do not involve any safety consideration not described or implicit in the Final Safety Analysis Report for the NFS Reprocessing Plant.

Very truly yours,

J. R. Clark, Manager
Environmental Protection & Licensing

JRC/kac

Attachments

cc: Mr. James G. Cline
New York State Atomic and Space Development Authority
New York, New York

SENT TO: BOURLAND
CASHMAN
DAVIES
MEYER/MATHUSA
By T.K.D.
Date 9/14/72

DRAFT

0.0 INTRODUCTION

These Technical Specifications identify the significant design features, operating conditions and operating limitations which are considered important in providing reasonable assurance that the facility will be operated without undue hazard to the health and safety of either the public or plant personnel. The Technical Specifications have been grouped in seven sections whose purposes are described below.

A summary description of the processing facility is provided in Section 1.0 to aid the presentation of the Technical Specifications. Details of the facility layout, plant design, process, equipment design, methods of protecting plant personnel, methods of protecting the public and plant operation are presented in the Final Safety Analysis Report for the Nuclear Fuel Services Fuel Reprocessing Plant.

Technical terms which are commonly used at the processing plant but which may be ambiguous are defined in Section 2.0 in order to clearly indicate the intent of the various Technical Specifications.

The types and quantities of source, special nuclear and byproduct material which can be safely stored and utilized at the plant are identified in Section 3.0. These nuclear materials include irradiated fuel, unirradiated fuel for checkout or processing operations, calibration sources and laboratory standards.

The limits established in Section 4.0 define the boundaries of safe operation yet permit the flexibility essential to chemical processing. The limits have been set above the values required by normal operation but well below the values at which an accident could occur or the public safety could be jeopardized.

Unlike a nuclear reactor which is designed to operate in a critical region, a chemical processing plant is designed and operated in such a way as to remain subcritical at all times. No single malfunction can lead to a critical incident. Secondary controls are installed to provide compensation in the event of the failure of a primary control. In addition, administrative controls are imposed to further assure the safe operation of the facility. For these reasons, if the specifications in Section 4.0, other than those for effluents are exceeded, shutdown is not mandatory. If such an

occasion arises, plant operations may continue in a "ready condition" until normal operations are restored; however, if during this period there is any occurrence that would further reduce the margin of safety, an immediate shutdown is required. If the specifications for gaseous effluents or liquid effluents are exceeded, processing operations will be shut down and immediate corrective action will be taken.

The specifications included in Section 5.0 set forth minimum conditions for safe plant operation. If specifications for monitoring gaseous and liquid effluents cannot be fulfilled, the operations which could cause a release of radioactive effluents must be shut down, with the exception of the main ventilation system which is normally operated until the problems are corrected. Other specifications in Section 5.0 indicate primary and alternate conditions which may be fulfilled. If the alternate condition is in use the operations shall be considered to be continuing in a "ready condition." If neither primary nor alternate conditions for a particular operation can be fulfilled, the operations shall be shut down with the exception of the waste tank off-gas system, which must be in operation while appropriate repairs are made.

The specifications listed in Section 6.0 require inspections of certain equipment or systems which, with one exception, are not primary safeguards but which are desirable for a defense in depth if a primary safeguard fails. The lone exception is Specification 6.1.1 requiring surveillance of the boron glass Raschig rings which are a primary safeguard in the high enriched uranium product storage tanks and the off-specification plutonium product storage tank. Surveillance requirements under Specification 6.1.1 conform to the proposed ANS standard Use of Borosilicate-Glass Raschig Rings as a Fixed Neutron Absorber in Solution of Fissile Materials. The other specifications in this section focus attention on controls which, while not primary safeguards, are of sufficient importance that immediate and continuing action should be made toward returning the failed component to service. If inspection required by Specification 6.2 through 6.10 reveals the inoperability of any of the specified equipment, plant operation may continue under "ready condition."

Section 7.0 identifies the administrative requirements, i.e., organization, standard procedures and reviews, etc., deemed necessary for safe operation.

1.1 LOCATION OF SITE

The NFS Spent Fuel Processing Plant is located at the Western New York Nuclear Service Center, a 3300-acre site in the Town of Ashford in the north central section of Cattaraugus County (14 acres in Erie County). The boundaries of the site superimposed on a topographic map of the area are shown in Figure 2.7a of the Safety Analysis. The plant is located near the center of the site on a mesa-like peninsula, bordered on the east by Erdman Brook and on the west by Quarry Creek. These two defiles are deep enough that, considering the water table contours, any activity getting into the ground water in the plant site area will show up eventually in one of these two streams and nowhere else, except, of course, for that which is sorbed upon the soils and held therein.

1.2 LOCATION OF THE PLANT

The plant is located near the center of the Service Center and is separately fenced with an 8-foot high exclusion fence. The plant is about 1200 meters from the nearest site boundary. The process areas have been grouped together as much as possible to minimize piping runs and to provide reasonable flow of material from the introduction of the fuel into the plant to the shipment of purified products.

1.3 FLOW OF MATERIAL THROUGH THE PLANT

Spent fuel assemblies are received in casks by rail or truck into the Fuel Receiving and Storage Area (FRS). The cask is placed into the cask unloading pool, the cover is removed and the assemblies are placed into storage canisters. These canisters are then transferred to the fuel storage pool for storage prior to further processing.

Page withheld as containing

Export Controlled Information

Page withheld as containing

Export Controlled Information

MPC	The maximum permissible concentration of radioactivity in air or water to which an individual may be exposed for a specified period without exceeding regulatory limits for radiation protection.
Neutron Absorber (Poison)	A material having a high probability for capturing neutrons, e.g. boron and cadmium.
Ready Condition	A temporary condition of operation using prescribed alternate instrumentation and controls or additional administrative safeguards while immediate action is being taken to restore normal operation.
Routine Entry Areas	A plant area to which entry is routinely scheduled for at least daily.
System	An integrated series of equipment and piping in which a specific function or operation is carried out.
U-235 Equivalent Concentration	A method of evaluating fissile material on the same basis. The formulation is not applicable to systems that depend upon geometrical control. U-235 equivalent concentration (g/l) = 1.66 x Pu concentration (g/l) + 1.66 x U-233 concentration (g/l) + 1.00 x U-235 concentration (g/l). For this purpose all plutonium is considered fissile and the U-235 concentration is assigned as that of the maximum pre-irradiation enrichment unless the isotopic concentrations are determined by analyses.

Page withheld as containing

Export Controlled Information

Page withheld as containing

Export Controlled Information

Page withheld as containing

Export Controlled Information

Page withheld as containing

Export Controlled Information

Page withheld as containing

Export Controlled Information

4.12 CAUSTIC CONCENTRATION IN CARBON STEEL WASTE STORAGE TANKS

Applicability

This specification applies to the concentration of caustic in the carbon steel waste storage tanks.

Objective

To assure that the liquid waste in carbon steel waste storage tanks shall be maintained in alkaline condition at all times to prevent excessive corrosion of the tanks.

Specification

4.12.1 EXCESS CAUSTIC (BASED ON THE STOICHIOMETRIC AMOUNT REQUIRED TO NEUTRALIZE ACIDIC WASTE) IN THE CARBON STEEL HIGH LEVEL WASTE STORAGE TANKS SHALL BE PRESENT IN CONCENTRATION OF (A) AT LEAST 10% BASED ON THE WASTE VOLUME INTRODUCED THEREIN UNTIL THE TOTAL VOLUME OF INTRODUCED WASTE EXCEEDS 10,000 GALLONS, (B) AT LEAST 5% ON THE SAME BASIS UNTIL THE TOTAL VOLUME OF INTRODUCED WASTE EXCEEDS 100,000 GALLONS AND (C) AT LEAST 1% ON THE SAME BASIS AFTER THE VOLUME OF INTRODUCED WASTE EXCEEDS 100,000 GALLONS.

Basis

The carbon steel high level waste storage tanks are not suitable, from a corrosion viewpoint, for storage of acidic wastes. To prevent introduction of acidic wastes, the normally acidic wastes are neutralized

prior to transfer into the storage tank. As an additional safety precaution, the solution in the storage tank will always contain excess caustic so that inadvertent addition of unneutralized waste would not result in accelerated tank corrosion.

4.13 SOLID RADIOACTIVE WASTE BURIAL

Applicability

This specification applies to the transfer and storage of solid radioactive waste material resulting from the separation, in the reprocessing plant, of nuclear material from nuclear fuel. This specification also applies to the burial of contaminated plant equipment if buried in the same area as separation waste.

Objective

To assure that activity associated with buried waste does not migrate from the burial area.

Specification

4.13.1 SOLID RADIOACTIVE WASTE GENERATED BY THE OPERATION OF THE PLANT SHALL BE BURIED COMPLETELY WITHIN SILTY TILL. BEFORE A NEW EXCAVATION IS USED, IT WILL BE INSPECTED TO ASSURE THAT IT IS FULLY WITHIN THE SILTY TILL FORMATION. BURIAL SHALL BE RESTRICTED TO THE PLANT AREA DRAINED BY QUARRY CREEK AND ERDMAN BROOK. NO BURIAL OF WASTE SHALL BE NEARER THAN 100 FEET TO THE CREST OF THE DEFILES IN WHICH QUARRY CREEK AND ERDMAN BROOK FLOW. THE MINIMUM COVER OF SILTY TILL OVER THE WASTE SHALL BE FOUR FEET AS MEASURED DOWN FROM THE TOP OF THE UNDISTURBED SILTY TILL STRATUM. EROSION IN THE DEFILES, BETWEEN THESE DEFILES AND

BURIAL AREAS AND OF THE EARTH COVER AFTER THE EXCAVATIONS HAVE BEEN FINALLY BACKFILLED SHALL BE MINIMIZED.

4.13.2 THE LOCATION AT WHICH RADIOACTIVE SOLID WASTES ARE BURIED IN ACCORDANCE WITH SPECIFICATION 4.13.1 SHALL BE MARKED WITH CONCRETE CAIRNS. A PLOT SHOWING THE APPROXIMATE LOCATION OF ALL WASTE BURIED SHALL BE MAINTAINED ACCOMPANIED BY AN INDEX DESCRIBING THE GENERAL TYPES OF WASTE BURIED AT EACH LOCATION INCLUDING THE DATES OF BURIAL AND CLOSURE. DUPLICATE RECORDS OF BURIALS SHALL BE MAINTAINED IN SEPARATE LOCATIONS.

4.13.3 SOLID RADIOACTIVE WASTE TO BE BURIED SHALL BE PLACED IN PACKAGES WHICH PREVENT DISPERSION OF CONTENTS AND PREVENT CONTAMINATION OF HANDLERS. IF A PACKAGE IS RUPTURED WHEN PLACED IN THE TRENCH, EARTH OVERFILL SHALL BE IMMEDIATELY PLACED OVER THE RUPTURED PACKAGE.

4.13.4 FUEL ELEMENTS SHALL NOT BE BURIED.

Basis

Nuclear Fuel Services operates two waste burial areas at the West Valley site. One area is for plant generated waste and is licensed under the regulations of the U.S. Atomic Energy Commission. The other area is primarily for waste generated at facilities other than the processing plant and is licensed under the regulations of the State

of New York. This specification applies to the burial area subject to USAEC licensing and regulations.

As discussed in paragraphs 4.90, 7.14, 7.15, 7.16, and 7.17 of the Safety Analysis, the ion exchange and permeability data for the soil in which the radioactive waste is to be buried indicate that the radioactivity will be retained in the immediate vicinity of the source. Further, the low permeability of the silty till will delay any possible seepage so that the longest lived ruthenium isotope, an element which has relatively poor ion exchange properties with the soil, would undergo nearly complete radioactive decay before it could traverse 100 feet of this soil to an adjacent water course.

Erosion of the stream defiles, the banks between the streams and the burial area and the burial area itself shall be minimized by grading, planting or liquid flow control.

Buried wastes are covered with four feet of silty till to provide shielding, to prevent water flow into the burial holes and, through ion-exchange action, to prevent activity from moving to the surface.

The provision of markers and records of burial on state owned property serves to facilitate perpetual care and precludes inadvertent excavation of radioactive material. Records are maintained at the plant site and by the New York State Atomic and Space Development Authority so that no single accident or act of nature would destroy both sets of records.

4.15 EVAPORATOR STEAM PRESSURE

Applicability

This specification applies to the steam pressure which may be used in process and waste evaporators.

Objective

To prevent rapid exothermic degradation reactions of organic materials that could be present in process or waste evaporators.

Specification

4.15.1 THE STEAM APPLIED TO PROCESS AND WASTE EVAPORATORS, OTHER THAN THE FOLLOWING, FOR HEATING SOLUTIONS SHALL NOT BE ADMITTED AT A PRESSURE EXCEEDING 25 PSIG.

EVAPORATOR	IDENTIFICATION
GENERAL PURPOSE	7C-5
ACID FRACTIONATOR FEED VAPORIZER	7E-1
ACID FRACTIONATOR FEED REBOILER	7E-2

Basis

"Red Oil" an organic phase mixture of uranyl nitrate, tributyl phosphate, dibutyl phosphate, and other organic decomposition products can be formed under certain conditions if organic products are carried over into an evaporator and allowed to concentrate. "Red oil" has been found to be

temperature sensitive and can explode at temperatures exceeding approximately 274°F. While this material can be formed only under a series of unusual maloperations of the process, absolute protection from the possibility of explosion is provided by limiting the pressure of the steam supplied to the evaporators to that corresponding to a temperature below 267°F.

The General Purpose Evaporator, the Acid Fractionator Feed Vaporizer and the Acid Fractionator Feed Reboiler are excluded from the steam pressure limitation because feed streams to these units do not come in contact with organic solvents and therefore no "red oil" will form in the units and no explosion hazard exists.

The consequences of failing to meet the requirements of this specification is to reduce or remove the margin of safety provided to prevent a possible "red oil" explosion.

4.16 RESPIRATORY PROTECTION EQUIPMENT

Applicability

This specification applies to protection of plant personnel from airborne concentrations of radioactive material exceeding the maximum permissible concentrations given in 10 CFR 20 for restricted areas.

Objective

To assure that plant personnel, utilizing respiratory protection equipment, will not inhale excessive quantities of radioactive material.

Specification

4.16.1 FULL FACE RESPIRATORS APPROVED FOR RADIOACTIVE MATERIALS UNDER BUREAU OF MINES SCHEDULE 21B, SHALL BE USED WHEN THE CONCENTRATION OF AIRBORNE RADIOACTIVITY IN THE AREA TO BE OCCUPIED IS EXPECTED TO EXCEED THE CONCENTRATIONS SHOWN IN TABLE I, APPENDIX B OF 10 CFR 20, BUT IS EXPECTED TO BE LESS THAN 100 TIMES SUCH CONCENTRATIONS.

4.16.2 SELF-CONTAINED BREATHING APPARATUS SATISFYING THE BUREAU OF MINES SCHEDULE 13E REQUIREMENTS OR SUPPLIED AIR RESPIRATORS SATISFYING THE BUREAU OF MINES SCHEDULE 19B SHALL BE USED WHEN THE CONCENTRATION OF AIRBORNE RADIOACTIVITY IN THE AREA TO BE OCCUPIED IS EXPECTED TO EXCEED 100 TIMES, BUT IS EXPECTED

TO BE LESS THAN 10,000 TIMES, THE CONCENTRATIONS SHOWN IN TABLE I, APPENDIX B OF 10 CFR 20.

4.16.3 PRIOR TO EACH ENTRY INTO A CONTAMINATED ATMOSPHERE, INDIVIDUALS WEARING RESPIRATORY PROTECTION SHALL CHECK THE MASKS FOR FIT AND LEAKAGE.

4.16.4 FOLLOWING EACH USE, RESPIRATORY PROTECTION MASKS SHALL BE RETURNED FOR DECONTAMINATION UNDER APPROVED HEALTH AND SAFETY PROCEDURES. WHEN THE CLEANING AND REPAIR HAS BEEN APPROVED BY HEALTH AND SAFETY PERSONNEL, MASKS SHALL BE PACKAGED INDIVIDUALLY IN PLASTIC BAGS AND DELIVERED FOR REUSE WITH CLEAN CLOTHING SUPPLIES.

4.16.4.1 MASKS SHALL NOT BE RELEASED FOR REUSE IF FIXED RADIOACTIVE CONTAMINATION EXCEEDS 100 CPM BETA/PROBE AREA OR 100 CPM ALPHA/PROBE AREA ON SURFACES EXPOSED TO THE PERSON, OR 500 CPM BETA/PROBE AREA AND 100 CPM ALPHA/PROBE AREA ON EXTERNAL SURFACES NOT IN CONTACT WITH THE PERSON.

4.16.4.2 FILTER CANISTERS FOR MASKS SHALL NOT BE RELEASED IF RADIOACTIVE CONTAMINATION EXCEEDS EITHER 100 CPM ALPHA/PROBE AREA OR 500 BETA/PROBE AREA AT CONTACT.

Basis

The Maximum Permissible Concentrations (MPC) shown in Table I Appendix B of 10 CFR 20 are the concentrations of airborne radioactivity that a worker could breath throughout his forty hour work week and not inhale excessive radioactivity. As a routine procedure, NFS requires that if plant personnel may be exposed to such concentrations, no matter how short the exposure time, appropriate respiratory protection must be worn. As additional protection, NFS limits the use of filter masks to use in airborne concentrations which are expected to be less than 100 times the MPC concentration even though the high efficiency filters used provide a protection factor of at least 100.

For use in airborne concentrations exceeding 100 times MPC (or a lower concentration identified in the NFS Health and Safety Manual), NFS requires the use of continuous flow supplied air equipment which is approved by the Bureau of Mines, a recognized authority in respiratory protection. Additional protection is afforded by an in-line filter, which would be used during an emergency exit in the unlikely loss of supplied air.

The protection factors of 100 for filter masks and 10,000 for supplied air or self contained breathing apparatus correspond to those given in proposed Appendix E to 10 CFR Part 20.

The contamination limits for reuse of masks and mask canisters are consistent with the limitations for uncontaminated plant areas (Zone II) and are expressed in radiation units used at the plant. Specifications 4.16.4.1 and 4.16.4.2 are based upon (1) a 20% counting efficiency and 50 cm^2 probe area for beta monitoring and (2) a 50% counting efficiency and 75 cm^2 probe area for alpha monitoring.

Page withheld as containing

Export Controlled Information

Page withheld as containing

Export Controlled Information

Page withheld as containing

Export Controlled Information

Page withheld as containing

Export Controlled Information

Page withheld as containing

Export Controlled Information

Page withheld as containing

Export Controlled Information

Page withheld as containing

Export Controlled Information

Page withheld as containing

Export Controlled Information

Page withheld as containing

Export Controlled Information

Page withheld as containing

Export Controlled Information

5.5 HIGH RADIATION AREA ACCESS

Applicability

This specification applies to alternatives that may be used in lieu of the control devices specified in 10 CFR Part 20.203(c)(2).

Objective

To assure that personnel do not inadvertently enter areas where the radiation exposure potential may be significant.

Specification

5.5.1 LOCKED DOOR SHALL BE USED TO CONTROL ADMITTANCE TO HIGH RADIATION AREAS WHERE AN INDIVIDUAL MIGHT RECEIVE A DOSE IN EXCESS OF 100 MILLIREM IN ONE HOUR. POSSESSIONS OF KEYS TO THESE LOCKS SHALL BE LIMITED TO NFS SUPERVISORY PERSONNEL.

5.5.2 IN PLANT AREAS WHICH CANNOT OR SHOULD NOT BE LOCKED, A SYSTEM OF STANTIONS CONNECTED BY ROPES WITH "HIGH RADIATION AREA" SIGNS ATTACHED SHALL BE USED TO OBSTRUCT ALL ACCESSIBLE SIDES OF A HIGH RADIATION AREA.

Basis

10 CFR 20.203 requires that a means be provided to warn personnel when they enter areas where the radiation exposure potential may be significant. The above procedures conform with the intent of 10 CFR 20. Some areas of the plant such as staircases that are necessary for evacuation

purposes have high radiation levels periodically. Since these areas cannot be readily locked and for safety reasons should not be locked the method described in this specification is used to alert personnel to high radiation areas so that they will not unintentionally enter these areas.

5.6 CONTAMINATION AND RADIATION CONTROL

Applicability

This specification applies to the allowable maximum radiation and removable contamination limits for routine entry areas.

Objective

To maintain adequate radiological conditions for the protection of the health and safety of plant personnel.

Specification

5.6.1 IRRESPECTIVE OF THE USE OF PROTECTIVE CLOTHING, MAINTENANCE OF CONTAMINATED ZONE BOUNDARIES, AND THE APPLICATION OF EXISTING TECHNIQUES IN ACCORDANCE WITH PLANT PROCEDURES, CONTAMINATION AND RADIATION LEVELS IN ROUTINE ENTRY AREAS SHALL BE REDUCED TO BELOW THE FOLLOWING LEVELS WITHIN SEVEN DAYS AFTER DETECTION AND THE SOURCE OF CONTAMINATION OR RADIATION SHALL BE IDENTIFIED AND CONTROLLED.

REMOVABLE CONTAMINATION	
BETA, DPM/100cm^2	50,000
ALPHA, DPM/100cm^2	500
RADIATION	
MAJOR PORTION OF BODY, MREM/HR	100

IF THE ABOVE REDUCTION IS NOT ACHIEVED IN THE TIME GIVEN, (A) THE PROCESSING OPERATION REQUIRING ACCESS TO THE AREA SHALL

BE DISCONTINUED UNTIL THE CONTAMINATION OR RADIATION SOURCE IS IDENTIFIED AND CONTROLLED AND CONTAMINATION AND RADIATION LEVELS ARE REDUCED TO BELOW THE ABOVE LIMITS AND (B) THE USAEC DIVISION OF COMPLIANCE SHALL BE NOTIFIED WITHIN 48 HOURS.

5.6.2 THE FOLLOWING AREAS ARE EXEMPT FROM 5.6.1: CASK HANDLING AND SERVICE BRIDGE AREAS OF THE FUEL RECEIVING AND STORAGE AREA, SCRAP REMOVAL ROOM, HOT SHOP, WASTE BURIAL AREA, OFF-GAS BLOWER ROOM AND EXTRACTION CHEMICAL ROOM (RECOVERED ACID AREA).

5.6.3 WHEN WORK INVOLVING FUEL UNLOADING OR STORAGE OR CASK DECONTAMINATION IS NOT IN PROGRESS IN THE FOLLOWING AREAS OF THE FUEL RECEIVING AND STORAGE AREA, DECONTAMINATION SHALL BE STARTED WITHIN 12 HOURS OF THE END OF WORK AND THE AREAS SHALL BE DECONTAMINATED TO BELOW THE FOLLOWING LEVELS:

AREA	MAXIMUM PERMISSIBLE CONTAMINATION LEVELS ALPHA, DPM/100 CM^2	BETA DPM/100 CM^2
Service Bridges	500	50,000
Cask Decontamination Area	500	500,000

Basis

The level of removable contamination in routine work areas is determined at least daily by operations personnel. In addition, the areas are surveyed at least weekly by health and safety personnel.

The levels of contamination given in specification 5.6.1 reflect the removable contamination levels which if exceeded could cause the airborne radioactivity to exceed the maximum permissible concentrations for 40-hours per week exposure. The limits are based on Plutonium-239 and Strontium-90. The radiation level given distinguishes between high radiation areas (specification 5.5) and other plant areas.

Plant areas named in specification 5.6.2 are excepted from the specified limits because the operations and work performed in these areas result in localized levels of contamination or radiation in excess of the specified limits. Personnel entering these areas wear respiratory protection equipment appropriate for the contamination level and work is done under authorized special procedures.

The pool service bridge and cask decontamination areas may become contaminated above the limits given in 5.6.1 while work is performed in the areas. The areas are separated from access areas by rope barriers and step-off pads. Personnel leaving the areas are required to survey themselves following removal of the outer work clothing. The procedures are designed to prevent the spread of contamination to other plant areas. When not in use, the areas are to be decontaminated to the limits specified in 5.6.2 to prevent spread of airborne contamination.

The program recognizes that contamination or radiation problems will periodically occur through human or mechanical failure or because of

the nature of the operations to be performed yet puts due emphasis on eliminating or controlling recurring problems.

Page withheld as containing

Export Controlled Information

Page withheld as containing

Export Controlled Information

Page withheld as containing

Export Controlled Information

Page withheld as containing

Export Controlled Information

Page withheld as containing

Export Controlled Information

Page withheld as containing

Export Controlled Information

Page withheld as containing

Export Controlled Information

Page withheld as containing

Export Controlled Information

TECHNICAL SPECIFICATION

ADMINISTRATIVE REQUIREMENTS

EXISTING SPECIFICATION		PROPOSED REVISION	
No.	Title	No.	Title
7.1	Administrative Requirments	7.1	Administrative Requirements
7.2	Procedures for Utilizing Respiratory Protection Equipment	4.16	Respiratory Protection Equipment
7.3	High Radiation Area Access	5.5	High Radiation Area Access
7.4	January 13 and 15, 1968 Letters	5.6	Contamination and Radiation Control
7.5	Category 10 Fuels Operating Provisions	7.2	Category 10 Fuels Operating Provisions

UNITED STATES
ATOMIC ENERGY COMMISSION
WASHINGTON, D.C. 20545

SEP 12 1973

Will book change to reflect there

Docket No. 50-201

Nuclear Fuel Services, Inc.
ATTN: Mr. J. R. Clark, Manager
Environmental Protection
and Licensing
6000 Executive Boulevard, Suite 600
Rockville, Maryland 20852

and

New York Atomic and Space
Development Authority
ATTN: Mr. James Cline
General Manager
230 Park Avenue
New York, New York 10017

Change No. 20
License No. CSF-1

Gentlemen:

This refers to your request of May 17, 1973 for changes to the Technical Specifications of License No. CSF-1 which would suspend certain specification requirements during the period the plant is shut down.

We have reviewed the requested changes and have found that some of the proposed changes cannot be approved at this time. These are:

1. The change in Paragraph 5C(4) of the license and in Technical Specification 5.1.3 to modify the reporting period for plant operating reports from a quarterly to a semi-annual period. License conditions cannot be changed through a change in Technical Specifications.

2. The change in Technical Specification 5.1.4, Table 5.1, Items B.i, ii, iii, iv, v and vi to reduce the sampling frequency from a quarterly to an annual basis. This change is not acceptable because seasonal data on depletion and transposition of radioisotopes in the watershed is of interest from an environmental viewpoint.

3. The change in Technical Specification 6.4 to reduce the frequency of operational checks of standby equipment from a quarterly to a semi-annual basis. This change is not acceptable because the availability and operability of standby utility equipment is important from a safety point of view even though plant processing operations are suspended.

We have determined that the other changes requested, as listed and described in the enclosure to this letter, do not present significant hazards considerations and that there is reasonable assurance that the health and safety of the public will not be endangered.

Therefore, pursuant to Section 50.59 of 10 CFR 50, changes to the Technical Specifications of Provisional Operating License CSF-1 are authorized as shown in the enclosure to this letter. These changes shall remain in effect during the period that plant processing operations are suspended.

FOR THE ATOMIC ENERGY COMMISSION

L. C. Rouse

L. C. Rouse, Chief
Fuel Fabrication and Reprocessing Branch
Directorate of Licensing

Enclosure:
1. Change #20, Revision List
2. Safety Evaluation

Technical Specification Change No. 20
NFS Reprocessing Plant
License CSF-1

Specification Number	Changes Authorized*
5.1.2	Suspend I-131 sample analysis and the use of Kr-85 and I-131 monitors.
5.1.3 G	Suspend liquid effluent analysis for Sr-89.
5.1.3 N	Suspend stack effluent analysis for Kr-85.
5.1.3 O and 5.1.4, Table 5.1, Item A.xii	Suspend stack effluent analysis for I-131.
5.1.4, Table 5.1, Items B.vii and viii	Suspend liquid effluent analysis for Sr-89 and Zr/Nb-95.
5.1.4, Table 5.1, Items B.xii, xiii and xv	Suspend stack monitoring for Kr-85 and stack sampling and analysis for H-3 and Sr-89.
5.1.4, Table 5.1, Items B.xx, xxii and xxiii	Suspend H-3 precipitation monitoring, the collection of meteorological data and the Ci-sec/m^3 Kr-85 exposure determinations.
5.1.4, Table 5.1, Item C.i	Suspend the I-131 analysis of milk.
6.1.3	Suspend the requirements for calibration of vessels containing boron Raschig Ring poisons except for vessels 5D-13A, B and C.
6.9.1	Calibrate water monitors and alarms on a semi-annual rather than on a quarterly basis.

* These technical specifications are suspended only for the period that reprocessing operations are suspended at the facility.

SAFETY EVALUATION

BY

THE FUEL FABRICATION AND REPROCESSING BRANCH

DIRECTORATE OF LICENSING

NUCLEAR FUEL SERVICES, INC.

DOCKET 50-201

TECHNICAL SPECIFICATION CHANGE NO. 20

Authorization Requested

By letter dated May 17, 1973, Nuclear Fuel Services, Inc. (NFS) requested changes in the Technical Specifications of License No. CSF-1 to eliminate certain requirements they considered to be inappropriate during the period that reprocessing operations will be suspended. The majority of the changes requested relate to analyses for radioisotopes which will not be released while reprocessing operations are suspended or to analyses for relatively short lived isotopes which have essentially disappeared through decay. Other changes relate to modification of reporting periods, reduction in sampling frequency, elimination of poisoned vessel calibration, reduction in the frequency of operational checks of standby utility equipment and a reduction in the calibration frequency for water activity monitors.

Background

Spent fuel reprocessing operations were suspended at the NFS West Valley Plant late in 1971. Since that time, special nuclear material has been

removed from the process equipment and the equipment has been extensively decontaminated. Special nuclear material now on site (except for laboratory materials) is stored as plutonium nitrate solution in shipping containers or in the form of spent fuel elements in the fuel storage pool.

The Technical Specifications written for the NFS license, especially those which apply to releases of radioactivity and environmental monitoring, represent requirements for an operating plant. The change in plant status justifies changes in those Technical Specifications which are inappropriate for a reprocessing plant in which reprocessing operations have been suspended.

Safety and Environmental Considerations

In this section of this Safety Evaluation, the changes requested by NFS are described, the safety and environmental considerations discussed and our conclusions as to acceptability of each change presented.

1. I-131

NFS has requested that monitoring, sampling and analysis for I-131 in stack gas be discontinued. Specification 5.1.2 requires that the stack effluents be continuously sampled and that the samples shall be analyzed at least every seven days for I-131. In addition, the specification requires that the I-131 in the stack effluent be continuously monitored. Specification 5.1.3 0 requires that the I-131

release, as the cumulative percent of the yearly limit, be reported for each month in the quarterly reports. Specification 5.1.4, Table 5.1, Item A.xii requires that the curies of I-131 released from the stack be determined for each month and be reported in the environmental monitoring reports. Specification 5.1.4, Table 5.1, Item C.i requires that local milk be sampled and analyzed for I-131 if I-131 releases exceed 30 millicuries per week.

Iodine-131 will be present in the spent fuel stored in the pool but it will not be released until the fuels are reprocessed except, possibly, from leaking spent fuel elements. The amount of iodine expected to leave leaking element is small; and in addition, leaking elements can be easily identified and controlled if necessary. The I-131 content of wastes from prior reprocessing operations which are stored on site has been reduced to an insignificant level through decay. Continued monitoring, sampling and analysis for I-131 in plant stack effluents and locally produced milk is unnecessary for either safety or environmental reasons.

2. Kr-85

NFS has requested that Technical Specifications requirements for monitoring and reporting Kr-85 content in stack gases and for calculating population exposures due to Kr-85 be suspended.

Specification 5.1.2 requires that the Kr-85 content of stack gas be continuously monitored. Specification 5.1.3 N requires that the maximum percent of the Kr-85 daily limit in the stack effluent for each month be reported in the quarterly operating reports. Specification 5.1.4, Table 5.1, Items Bxii and Bxxiii requires that Kr-85 releases be determined and exposures calculated and reported in environmental reports.

At the NFS plant the noble gases in spent fuel are released quantitatively when the fuel is processed and are dispersed to the atmosphere via the main plant stack. There will be no release of Kr-85 from the reprocessing plant while operations are suspended except, possibly, from leaking spent fuel elements stored in the fuel. Any leakage from stored fuel would be small compared to the daily release limit of 12,600 curies per day and would be so diluted in the stack discharge that offsite exposures would be undetectable. Continued monitoring and reporting of Kr-85 releases and estimation of Kr-85 exposures while the plant is shut down will serve no useful purpose.

3. H-3

NFS has requested that specifications relating to stack releases of tritium and the amount of tritium in rainwater be discontinued.

The quantity of tritium released via the stack and the quantity of tritium in rainwater at site perimeter sampling stations must be

determined and reported in the environmental reports according to Specification 5.1.4, Table 5.1, Items Bxiii and Bxx. Stack discharges of tritium and tritium in rainwater from plant operation should be insignificant when no dissolution or fuel processing operations are performed; and there is no need for continued analysis or reporting of data.

4. Sr-89 and Zr/Nb-95

NFS has requested that the analysis and reporting of Sr-89 and Zr/Nb-95 content of waste streams be eliminated.

Specifications 5.1.3 G, 5.1.4, Table 5.1, Items Bvii, viii and xv require analysis and reporting of Sr-89 or Zr/Nb-95 in liquid and gaseous wastes. These isotopes have relatively short half lives (53 days for Sr-89 and 65 days for Zr/Nb-95) and therefore the release potential has decreased significantly since processing operations were stopped. Continued analysis for these isotopes is unnecessary from both the safety and environmental viewpoints.

5. Calibration of Poisoned Vessels

NFS has requested that periodic calibration of vessels containing boron-glass or boron-steel Raschig Rings for criticality control be eliminated.

Specification 6.1.3 requires that vessels containing boron-glass or boron-stainless steel Raschig Rings be calibrated every two years to

determine that the volume of rings per unit of packed height has not changed materially. With the suspension of plant operations, no use is being or will be made of these vessels. NFS has committed to recalibrate the vessels prior to their reuse. Plant safety will not be compromised by approving the NFS request.

6. Calibration of water monitors

NFS has requested that the provision of Technical Specification 6.9.1 that requires testing of radiation alarm systems on condensate and cooling water system on a monthly basis be changed to a semi-annual basis. The process use of both cooling water and steam is limited because of the suspension of plant activities. In addition, the radioactivity in process vessels served by the water and steam systems (except waste tanks) has been reduced by decontamination operations. Condensate from the neutralized high-level waste tank heaters is not recycled; it is analysed and released or evaporated. Cooling water from the stainless steel high-level waste tank is monitored at the tank and again in the utility area. These factors, combined with past favorable experience with the installed monitors, demonstrates that changing the testing schedule will not adversely affect plant safety.

7. Change in Schedule For Operating Reports

NFS has requested that the schedule for plant operating reports be changed from a quarterly to a semi-annual basis. The quarterly schedule

is included in paragraph C (4) of the license and cannot be changed through a change in Technical Specifications. The schedule of Specification 5.1.3 for reporting releases of radioactivity is based on paragraph C (4) and cannot be changed without modification of license paragraph C (4). The requested changes cannot be authorized in this change to Technical Specifications.

8. Change In Frequency of Sampling

NFS has requested that Specification 5.1.4, Table 5.1, Items B.i through vi, be changed to require annual rather than quarterly collection and analysis of Buttermilk Creek samples. The depletion and transposition of radionuclides in the watershed is important from an environmental point of view. Annual sampling would not adequately show seasonal variations or depletion rates. The NFS request for this change should be rejected.

9. Operational Checks of Standby Equipment

NFS has requested that the frequency of operational checks of standby equipment listed in Specification 6.4 be changed from a quarterly to semi-annual basis. No information was submitted to demonstrate that semi-annual tests would be adequate to assure the availability and operability of standby equipment. We disagree with this request because the availability of standby utility equipment is important from a safety point of view even though plant operations have been suspended.

Conclusion

Based on our review of the changes to Technical Specifications described in Paragraphs 1-6 above, we conclude that they do not present significant hazards considerations and that there is reasonable assurance that the health and safety of the public will not be endangered. This conclusion is based on the following facts:

1) Reprocessing operations are suspended at the plant and continued monitoring, sampling and analysis for isotopes which have either decayed significantly or are released in significant quantities only during operations is unnecessary to protect the health and safety of the public; and furthermore, the data which would have been gained from the suspended monitoring is not needed for our environmental evaluation of the facility.
2) Periodic calibration of the poisoned vessels which are empty and will not be used while plant operations are suspended is unnecessary, and;
3) A reduced calibration frequency for the water monitors is justified because of reduced radioactivity in process equipment and because of past favorable operating experience with the monitors.

We recommend that the changes described in Paragraphs 7-9 above be denied because (1) they are not suitable subjects for Technical Specification changes or (2) the changes could have an adverse effect on plant safety or environmental monitoring.

Approval of the attached Change No. 20 to the Technical Specifications of License CSF-1 is recommended.

Signed W. A. Nixon

W. A. Nixon
Fuel Fabrication and Reprocessing Branch
Directorate of Licensing

Approved L. C. Rouse

L. C. Rouse, Chief
Fuel Fabrication and Reprocessing Branch
Directorate of Licensing

5.1 EFFLUENT AND ENVIRONMENTAL MONITORING

Applicability

This specification applies to the sampling and analysis of gaseous and liquid plant effluents and to environmental monitoring.

Objective

To establish sampling points, sampling frequency and sample analytical requirements for gaseous and liquid plant effluents and to establish an environmental monitoring program and reporting requirement.

Specification

5.1.1 WHENEVER LIQUID IS DISCHARGED FROM THE STORAGE LAGOONS, A REPRESENTATIVE SAMPLE SHALL BE WITHDRAWN BY THE CATTARAUGUS CREEK CONTINUOUS SAMPLER. AT LEAST EVERY SEVEN DAYS, A COMPOSITE OF THIS SAMPLE SHALL BE ANALYZED FOR TRITIUM, RUTHENIUM 106, TOTAL ALPHA AND TOTAL BETA RADIOACTIVITY.

IF THE CONTINUOUS SAMPLER BECOMES INOPERATIVE, UP TO 2,000,000 GALLONS MAY BE DISCHARGED FROM THE LAGOONS IN ANY ONE-YEAR PERIOD PROVIDED CATTARAUGUS CREEK SAMPLES ARE COLLECTED NEAR THE CONTINUOUS SAMPLER LOCATION FOR EACH LAGOON DISCHARGE OR FOR EACH 100,000 GALLONS OF DISCHARGE, WHICHEVER RESULTS IN THE GREATER SAMPLING FREQUENCY. SAMPLES SO COLLECTED SHALL BE INDIVIDUALLY ANALYZED FOR TRITIUM, RUTHENIUM 106, TOTAL ALPHA AND TOTAL BETA RADIOACTIVITY.

5.1.2 THE RADIOACTIVITY IN STACK EFFLUENTS SHALL BE CONTINUOUSLY SAMPLED. THE SAMPLES SHALL BE ANALYZED AT LEAST EVERY SEVEN DAYS FOR AND PARTICULATE RADIOACTIVITY. IF THE STACK SAMPLER BECOMES INOPERATIVE, IMMEDIATE REPAIR SHALL BE INSTITUTED TO RETURN THE SAMPLER TO SERVICE.

IN ADDITION TO THE WEEKLY SAMPLES OBTAINED FROM THE STACK, THE PARTICULATE RADIOACTIVITY IN THE STACK GAS SHALL BE CONTINUOUSLY SUBJECT TO DETECTION BY A STACK MONITOR.

IF THE STACK SAMPLER BECOMES INOPERATIVE, IMMEDIATE REPAIR SHALL BE INSTITUTED TO RETURN THE UNIT TO SERVICE, AND THE STACK MONITOR SHALL BE USED IN THE INTERIM TO DETERMINE I-131 AND PARTICULATE RELEASES.

IF THE STACK MONITOR FAILS, A REPRESENTATIVE SAMPLE OF THE RADIOACTIVITY IN STACK EFFLUENTS SHALL BE COLLECTED EACH SHIFT AND USED TO DETERMINE I-131 AND DURING PERIODS AND PARTICULATE RADIOACTIVITY. THE Kr-85 CONTENT OF STACK GASES DURING PERIODS WHEN THE STACK MONITOR IS INOPERATIVE SHALL BE CALCULATED FROM FUEL BURNUP DATA.

5.1.3 THE FOLLOWING INFORMATION, DETERMINED FROM THE SAMPLES TAKEN AS REQUIRED BY 5.1.1 AND 5.1.2, (OR, FOR I-129, LAGOON SAMPLES) SHALL BE INCLUDED IN THE QUARTERLY OPERATING REPORT:

A) TOTAL CURIES OF ALPHA ACTIVITY DISCHARGED INTO CATTARAUGUS CREEK EACH MONTH.

B) TOTAL CURIES OF BETA ACTIVITY DISCHARGED INTO CATTARAUGUS CREEK EACH MONTH.

C) CURIES OF TRITIUM DISCHARGED INTO CATTARAUGUS CREEK EACH MONTH.

D) CURIES OF RU-106 DISCHARGED INTO CATTARAUGUS CREEK EACH MONTH.

E) CURIES OF CS-137 DISCHARGED INTO CATTARAUGUS CREEK EACH MONTH.

F) CURIES OF CS-134 DISCHARGED INTO CATTARAUGUS CREEK EACH MONTH.

G) CURIES OF SR-90 DISCHARGED INTO CATTARAUGUS CREEK EACH MONTH.

H) CURIES OF I-129 DISCHARGED INTO CATTARAUGUS CREEK EACH MONTH.

I) THE PERCENT OF 10 CFR 20.106a LIMITS FOR RADIOACTIVITY IN CATTARAUGUS CREEK AVERAGED FOR EACH RESPECTIVE MONTH OF THE REPORTING QUARTER.

(Change No. 20)

K) THE PERCENT OF 10 CFR 20.106a LIMITS FOR RADIOACTIVE STRONTIUM AND CESIUM ISOTOPES IN CATTARAUGUS CREEK AVERAGED FOR EACH RESPECTIVE MONTH OF THE REPORTING QUARTER.

L) CURIES OF PARTICULATES DISCHARGED VIA THE STACK FOR EACH MONTH.

M) THE PERCENT OF THE MONTHLY TECHNICAL SPECIFICATION LIMIT FOR DISCHARGE OF PARTICULATES VIA THE STACK.

Basis

Effluent Monitoring

Samples of water from Cattaraugus Creek are taken with a continuous sampler located about one-half mile downstream from the confluence of Cattaraugus and Buttermilk Creeks. Portions of each weekly sample are composited to product a sample representative of one month's discharge. The weekly samples are analyzed for gross alpha, gross beta, tritium and ruthenium 106. The composite is analyzed for gross alpha, gross beta strontium 90, strontium 89, cesium 134, cesium 137, ruthenium 106 and tritium.

A stream gage located near the sampling station is used to determine total flow in Cattaraugus Creek. Flow from the lagoon is determined by a calibrated weir located on the discharge line. The flow ratio is used in conjunction with the iodine 129 analysis of lagoon water to calculate the iodine 129 content in Cattaraugus Creek.

Gaseous plant effluents are sampled in the plant stack. The stack sampler contains a filter to collect particulates and an activated charcoal filter to collect iodine 131. Samples are removed from the stack sampler at least each week and analyzed.

The stack monitor is used to continuously determine the particulate, iodine 131 and krypton 85 radioactivity in the stack air and to alert operators if pre-set limits are exceeded. The particulate sampler is changed every 8 hours and will alarm if the accumulation of particulate radioactivity over an 8-hour period exceeds that which

(Change No. 20)

TABLE 5.1

EFFLUENT AND ENVIRONMENTAL MONITORING PROGRAM

A. The licensee shall determine for each month, based on samples taken at the indicated location and other information collected during the month, the following:

i	Total curies of beta radioactivity other than tritium released at effluent weir.
ii	Total curies of alpha radioactivity released at the effluent weir.
iii	Curies of tritium released at effluent weir.
iv	Curies of strontium 90 released at effluent weir.
v	Curies of cesium 134 released at effluent weir.
vi	Curies of cesium 137 released at effluent weir.
vii	Curies of ruthenium 106 and rhodium 106 released at effluent weir.
viii	Volume of water released at effluent weir.
ix	Volume of water flow through site in Cattaraugus Creek.
x	Curies of beta emitting particulates released via the stack.
xi	Curies of alpha emitting particulates released via the stack.
xii	Curies per cubic meter gross beta radioactivity of particulates (average and maximum) collected by each of the 3 site perimeter samplers on filter paper.
xiii	Curies per cubic meter gross alpha radioactivity of particulates (average and maximum) collected by each of the 3 site perimeter samplers on filter paper.

(Change No. 20)

B. The licensee shall determine each quarter, based on samples and other information collected during the quarter, the following:

i Identity of principal radionuclides whose presence can be determined by gamma spectroscopy of a sample (one per calendar quarter) of Buttermilk Creek bottom silt collected at the Thomas Corner Road bridge.

ii Microcuries per gram total beta radioactivity of a sample (one per calendar quarter) of Buttermilk Creek bottom silt collected at the Thomas Corner Road bridge.

iii Microcuries per gram total alpha radioactivity of a sample (one per calendar quarter) of Buttermilk Creek bottom silt collected at the Thomas Corner Road bridge.

iv Microcuries tritium per milliliter of water collected once per quarter at the Buttermilk Creek silt sampling location during a normal liquid effluent release from the plant.

v Microcuries total beta radioactivity per milliliter of water collected once per quarter at the Buttermilk Creek silt sampling location during a normal liquid effluent release from the plant.

vi Microcuries total alpha radioactivity per milliliter of water collected once per quarter at the Buttermilk Creek silt sampling location during a normal effluent release from the plant.

vii Curies of iodine 129 released at effluent weir.

viii A quantitative analysis of alpha emitting components in a quarterly composite collected at the effluent weir.

xi The exposure, in megawatts days, of fuel dissolved during the quarter.

xii Curies of iodine 129 released via the stack.

xiii Curies of strontium 90 released via the stack.

xiv Curies of ruthenium 106 released via the stack.

(Change No. 20)

C. The licensee shall determine the following information according to the schedule given:

i During August of each year the licensee shall collect a milk sample from a farm within 2-1/2 miles of the plant in the north-west sector and a milk sample from a farm within 2-1/2 miles of the plant in the north-east sector. The samples shall be composites of one day's production from cows which are on pasture. Each sample shall be analyzed separately to determine:

a) Microcuries iodine 129 per milliliter

b) Microcuries strontium 90 per milliliter

c) Microcuries cesium 134 per milliliter

d) Microcuries cesium 137 per milliliter

ii During the second and third quarters of each year, licensee shall take fish samples from Cattaraugus Creek between the Springville hydroelectric dam and the Cattaraugus Creek-Buttermilk Creek confluence. One sample shall be taken during each of the two quarters. A sample shall consist of at least 9 fish, each at least six inches long. Each fish in each sample shall be analyzed to determine:

a) Median and geometric deviation of cesium 134 microcuries per kilogram of flesh.

b) Median and geometric deviation of cesium 137 microcuries per kilogram of flesh.

c) Median and geometric deviation of strontium 90 microcuries per kilogram of flesh.

iii During the second and third quarters of each year, licensee shall take fish samples from Cattaraugus Creek between the Springville hydroelectric dam and the Cattaraugus Creek-Buttermilk Creek confluence. One sample shall be taken during each of the two quarters. A sample shall consist of at least 9 fish, each at least six inches long. Each fish in each sample shall be analyzed to determine:

a) Median and geometric deviation of cesium 134 microcuries per kilogram of flesh.

b) Median and geometric deviation of cesium 137 microcuries per kilogram of flesh.

c) Median and geometric deviation of strontium 90 microcuries per kilogram of flesh.

(Change No. 20)

Page withheld as containing

Export Controlled Information

6.0 WATER ACTIVITY ALARMS

Applicability

This specification requires periodic verification of the operability of the alarms used to detect excessive radioactivity in cooling water or steam condensate returned from the coils or jackets used to control temperature of vessels containing radioactivity.

Objective

To provide added assurance of prompt detection of excessive radioactivity in steam condensate and cooling water.

Specification

6.9.1 THE OPERABILITY OF EACH RADIATION ALARM SYSTEM MONITORING RETURNED CONDENSATE OR COOLING WATER SHALL BE TESTED AT LEAST SEMIANNUALLY BY THE APPLICATION OF A RADIATION SOURCE. IMMEDIATE AND CONTINUING EFFORT SHALL BE DIRECTED TO REPAIR ANY SYSTEM FOUND INOPERABLE.

Bases

Steam and cooling water are used for heating and cooling of process solutions. The pressures of these heat transfer fluids are higher than those of the process solution in order to minimize leakage of radioactivity if a passage should develop between a process solution and a heat transfer fluid. In addition, radiation monitors are incorporated into the piping where the steam condensate and cooling water returns to the utility room. These monitors alarm in occupied areas when excessive radioactivity is detected. Further assurance is provided by the batchwise collection and analysis of returned condensate and a radiation monitor at the outlet from the cooling coils of high level, stainless steel waste storage tanks.

Since the radiation instruments are read at least once per shift testing of the radiation alarms once per month is sufficient to verify alarm functionability.

For information in PA SOP - Ofc

UNITED STATES
ATOMIC ENERGY COMMISSION
WASHINGTON, D.C. 20545

Messrs. R. W. Deuster
R. V. Curry
W. H. Lewis
H. W. Brook
N. J. Newman
R. E. L. Stani
E. D. North
W. A. Oldham

Newman, Reis & Axelrad
Washington, D. C.

W. V. Licensing File

L:MPP:FAC
50-201

FEB 28 1974

Nuclear Fuel Services, Inc.
ATTN: Mr. J. R. Clark, Manager
Environmental Protection
and Licensing
6000 Executive Boulevard
Suite 600
Rockville, Maryland 20852

and

New York Atomic and Space
Development Authority
ATTN: Mr. L. Strongin
Secretary and
Assistant Counsel
230 Park Avenue
New York, New York 10017

RECEIVED
MAR - 4 1974

Change No. 21
License No. CSF-1

Gentlemen:

We have reviewed your security plan dated January 7, 1974 for the West Valley Fuel Reprocessing Plant, and Revision 1 to that plan dated February 19, 1974, which were submitted in accordance with 10 CFR 50.54(q).

In order to accept your plan, as revised by Revision 1, we find it necessary to strengthen certain aspects of your security program. Accordingly, pursuant to 10 CFR 50.36(b) and 10 CFR 50.109 and 10 CFR 70.61(a), Change No. 21 in the Technical Specifications of License CSF-1 is hereby made adding a new Section 9.0, "Facility Security", to Appendix B, effective March 6, 1974.

You may request a hearing within 20 days of the date of this letter with respect to all or any part of the additional specifications set forth in Section 9.3 of the enclosure. It has been determined that the prompt establishment of the measures to protect plants of licensees against acts of sabotage is required in the interests of the public health and safety. Therefore, any request for a hearing will not stay the March 6, 1974 effective date of these specifications.

As requested, we have granted an extension in time for you to achieve compliance with certain of the requirements of 10 CFR Part 73. You will note, however, that we have granted an extension of only 60 days. We do not believe a longer extension of time should be authorized.

Note that changes in your approved security plan must be made in accordance with 10 CFR 50.54(p).

We have established that your security plan submitted to our office on February 19, 1974, contains information of a type specified in 10 CFR 2.790(d). Accordingly, pursuant to Section 2.790(d), the enclosure is deemed to be commercial or financial information within the meaning of 10 CFR 9.5(a)(4) and shall be subject to disclosure only in accordance with the provisions of 10 CFR 9.10. For the same reason, we are withholding the attachments to the enclosure of this letter from public disclosure.

Sincerely,

R. G. Page, Chief
Materials and Plant Protection
Directorate of Licensing

Enclosure:
Change No. 21 to Technical
Specification, License
No. CSF-1

Information withheld pursuant to 10 CFR 2.790(d)

[redacted]

9.0 Facility Security

[redacted]

Information withheld pursuant to 10 CFR 2.790(d)

[redacted]

Information withheld pursuant to 10 CFR 2.790(d)

Information withheld pursuant to 10 CFR 2.790(d)

[redacted]

Information withheld pursuant to 10 CFR 2.790(d)

ATTACHMENT 1

[redacted]

Information withheld pursuant to 10 CFR 2.790(d)

ATTACHMENT 2

[redacted]

UNITED STATES
ATOMIC ENERGY COMMISSION
WASHINGTON, D.C. 20545

RECEIVED
OCT 21
J. R. CLARK

L:FFRB2:RSW
50-201

OCT 15 1974

BER
JPD
MJJ
TKW
GDV
CES.

Nuclear Fuel Services, Inc.
ATTN: Mr. J. R. Clark, Manager
Environmental Protection
and Licensing
6000 Executive Boulevard, Suite 600
Rockville, Maryland 20852

And

New York Atomic and Space
Development Authority
ATTN: Mr. James Cline
General Manager
230 Park Avenue
New York, New York 10017

Change No. 22
License No. CSF-1

Gentlemen:

This refers to the NFS request dated January 14, 1974, for a change to Technical Specifications of Provisional Operating License No. CSF-1. The proposed change to Specification 7.1 Administrative Requirements, requests authorization to formally establish the position of General Manager (previously titled Site Manager) at the Reprocessing Plant, to limit the scope of the Technical Services Manager's responsibility for nuclear safety reviews to those proposed changes which are initiated at the plant and are not being pursued under the license amendment application dated October 3, 1973, and to delete the position of Assistant General Manager from the NFS Reprocessing Plant organization chart. Also, paragraph 7.1.1.7 "Minimum Qualifications of the Plant Safety Committee positions" submitted September 20, 1974 to Technical Specifications 7.1 is to be incorporated.

We have reviewed the information submitted by Nuclear Fuel Services, Inc. and have determined that the change in Technical Specifications

designated as Change No. 22 and set forth on enclosed pages 70 and 71 does not present a significant hazards consideration, and that there is reasonable assurance that the health and safety of the public will not be endangered.

Accordingly, pursuant to Section 50.91 of Title 10, Code of Federal Regulation, Part 50, the change in Technical Specification 7.1 of Provisional Operating License No. CSF-1 is authorized.

FOR THE ATOMIC ENERGY COMMISSION

R. S. Winchester

R. S. Winchester
Fuel Fabrication and
Reprocessing Branch No. 2
Directorate of Licensing

Enclosures:
Pages 70 and 71

Chayo Tsuno

7.1 ADMINISTRATIVE REQUIREMENTS

APPLICABILITY

This specification establishes administrative standards for governing the operation of the facility.

OBJECTIVE

To assure that a management system responsive to the safety needs of the operation is established and maintained.

SPECIFICATION

7.1.1 ORGANIZATION. FOR PURPOSES OF MAINTAINING SAFE OPERATION AND CONTROL OF THE FACILITY AND OF ATTENDANT ACTIVITIES, NUCLEAR FUEL SERVICES, INC., SHALL PROVIDE MANAGEMENT OF THE PLANT THROUGH AN ADMINISTRATIVE FRAMEWORK INCLUDING, BUT NOT LIMITED TO THE FOLLOWING:

7.1.1.1 A GENERAL MANAGER, HAVING OVERALL RESPONSIBILITIES FOR ALL ACTIVITIES AT THE PLANT SITE.

7.1.1.2 A PLANT MANAGER, REPORTING TO THE GENERAL MANAGER, DIRECTLY RESPONSIBLE FOR ALL ACTIVITIES AT THE PLANT INVOLVING PRODUCTION, HEALTH AND SAFETY, NUCLEAR SAFETY AND ADHERENCE TO THE LIMITS AND CONDITIONS SET FORTH IN THIS LICENSE.

7.1.1.3 AN OPERATIONS MANAGER, REPORTING TO THE PLANT MANAGER, RESPONSIBLE FOR CARRYING OUT PRODUCTION ACTIVITIES IN ACCORDANCE WITH APPROVED PROCEDURES AND ACCEPTED HEALTH AND SAFETY STANDARDS.

7.1.1.4 A HEALTH AND SAFETY MANAGER, REPORTING TO THE PLANT MANAGER, RESPONSIBLE FOR MONITORING THE RADIOLOGICAL SAFETY OF ALL PLANT ACTIVITIES AND FOR ADVISING ALL DEPARTMENTS ON RADIOLOGICAL SAFETY MATTERS.

7.1.1.5 A TECHNICAL SERVICES MANAGER, REPORTING TO THE PLANT MANAGER, RESPONSIBLE FOR A CONTINUOUS REVIEW OF OPERATIONS TO ASSURE NUCLEAR SAFETY.

7.1.1.6 A PLANT SAFETY COMMITTEE RESPONSIBLE FOR: REVIEW AND APPROVAL OF ALL STANDARD OPERATING PROCEDURES AND LETTERS OF AUTHORIZATION; REVIEW AND APPROVAL OF ALL CHANGES IN THE PROCESS, THE PROCESS SYSTEM, AND STANDARD OPERATING PROCEDURES; INVESTIGATION OF ABNORMAL OCCURRENCES WHICH MAY AFFECT RADIOLOGICAL SAFETY OR CRITICALITY PREVENTION; AND RECOMMENDATION OF MEASURES WHICH WILL PREVENT REPETITION OF SUCH ABNORMAL OCCURRENCES. THE COMMITTEE SHALL CONSIST OF, BUT NOT BE LIMITED TO, THE PLANT MANAGER, THE TECHNICAL SERVICES MANAGER, THE HEALTH AND SAFETY MANAGER AND THE OPERATIONS MANAGER.

"7.1.1.7 THE MINIMUM QUALIFICATIONS OF THE PLANT SAFETY COMMITTEE POSITIONS SHALL BE AS PRESENTED IN SECTION VIII - 1.5 OF THE SAFETY ANALYSIS REPORT AS REVISED SEPTEMBER 19, 1974."

7.1.2 PROCEDURES SHALL BE MAINTAINED UNDER THE OVERALL DIRECTION OF THE GENERAL MANAGER COVERING THE:

7.1.2.1 PREPARATION, APPROVAL, AND ISSUANCE OF ALL OPERATING INSTRUCTIONS AND CHANGES THERETO, INCLUDING, BUT NOT BE LIMITED TO: STANDARD OPERATING PROCEDURES, LETTERS OF AUTHORIZATION, RUNSHEETS, SPECIAL WORK PROCEDURES, AND EXTENDED WORK PROCEDURES, WHERE NUCLEAR CRITICALITY OF RADIATION SAFETY ARE CONSIDERATIONS.

7.1.2.2 INVESTIGATION OF ABNORMAL CONDITIONS WHICH INVOLVE THE PROCESSING, HANDLING OR STORAGE OF RADIOACTIVE MATERIALS, AND WHICH AFFECT NUCLEAR CRITICALITY OR RADIATION SAFETY.

7.1.2.3 ACTIONS TO BE TAKEN IN EVENT OF AN EMERGENCY INVOLVING RADIOACTIVE MATERIAL. SUCH ACTIONS TO INCLUDE, BUT NOT BE LIMITED TO: SHUTDOWN OF SPECIFIC EQUIPMENT, ACTIVATION OF THE EMERGENCY PLAN, SUMMONING OF OUTSIDE SUPPORT, AND REENTRY TO THE ACCIDENT AREA.

7.1.2.4 PERFORMANCE OF PERIODIC REVIEWS OF OPERATING PRACTICES, RECORDS AND AUDITS.

7.1.3 PLANT OPERATION. MEMBERS OF THE PRODUCTION OPERATING STAFF SHALL HAVE A THROUGH KNOWLEDGE OF THE PROCEDURES GOVERNING THE WORK FOR WHICH THEY ARE RESPONSIBLE. DRILLS SHALL BE HELD AT SUFFICIENT FREQUENCY TO ENSURE PROFICIENCY IN EMERGENCY PROCEDURES. A COMPLETE AND CURRENT SET OF OPERATIONAL PROCEDURES SHALL BE PROVIDED IN THE CONTROL ROOM AND IN OTHER APPROPRIATE AREAS WHERE CONTROL FUNCTIONS ARE PERFORMED.

UNITED STATES
NUCLEAR REGULATORY COMMISSION
WASHINGTON, D. C. 20555

R. V. Curry
W. H. Lewis
H. W. Brook
N. J. Newman
L. E. Mills
E. D. Nor
W. A. Old
J. P. Duckwo
R. T. Smokow
G. E. Kitche

Burt

JUN 11 1975

SG:RRR
50-201

Copies 3/3 3
DC
AB
BV
LN
file
return 2 copies

CC-G

Nuclear Fuel Services, Inc.
ATTN: Mr. J. R. Clark, Manager
Environmental Protection
and Licensing
6000 Executive Boulevard
Suite 600
Rockville, Maryland 20852

Gentlemen:

We have reviewed your letter of April 17, 1975, and its enclosures, concerning the security program for your West Valley facility.

In order to accept your plan, as revised by Revision 2 and 3, we have found it necessary to require that you strengthen your security program in certain respects. Accordingly, pursuant to 10 CFR 50.36(b), 10 CFR 50.109 and 10 CFR 70.61(a), Change No. 23 in the Technical Specifications of License CSF-1 is hereby made by rescinding Section 9.0 "Facility Security" to Appendix B in its entirety and issuing a new Section 9.0 as contained in the enclosure, effective immediately. The new license conditions which we are imposing in Section 9.3 are the measures which my staff discussed with your representatives on May 30, 1975.

We have established that the attachments to your letter of April 17, 1975, contain information of a type specified in 10 CFR 2.790(d). Accordingly, the enclosures are deemed to be commercial or financial information within the meaning of 10 CFR 9.5(a)(4) and shall be subject to disclosure only in accordance with the provisions of 10 CFR 9.12. For the same reason we are withholding Attachment I of the enclosure to this letter.

Sincerely,

R. G. Page, Acting Director
Division of Safeguards

Enclosure:
License Conditions

cc w/o Attachment I:
Service List

RECEIVED
JUN 13 1975
J. R. CLARK

[redacted]

Information withheld pursuant to 10 CFR 2.790(d)

[redacted]

Information withheld pursuant to 10 CFR 2.790(d)

[redacted]

ATTACHMENT 1

[redacted]

Information withheld pursuant to 10 CFR 7.90(d)

J. P. DUCKWORTH -- WEST VALLEY

112110

Nuclear Fuel Services, Inc. 6000 Executive Boulevard, Suite 600 Rockville, Maryland • 208

A Subsidiary of Getty Oil Company

(301) XXXXX
770-551

October 3, 1973

Mr. S. H. Smiley, Deputy Director
Fuels and Materials
Directorate of Licensing
Office of Regulation
U. S. Atomic Energy Commission
Washington, D. C. 20545

Dear Mr. Smiley:

Your letter dated May 25, 1972, advised NFS that certain projects within the modification program being conducted at the NFS Reprocessing Plant would have to be considered by the USAEC under the provisions of 10 C.F.R. §50.91.

NFS is submitting today an Application for Appropriate Amendments to Provisional Operating License No. CSF-1. To enable a more effective evaluation of the entire modification program as a whole, NFS has included in this application not only the projects mentioned in your letter of May 25, 1972, but also the other portions of the modification program.

Table I-3-1 of the Safety Analysis Report being submitted by NFS specifies, among other information, the licensing authorization that NFS will pursue for the various items within the modification program.

As you will note, authorization for the items designated 1(b), 2(c), and 3 are being requested under the construction permit to be issued pursuant to 10 C.F.R. §50.91. Since some of these items were the subject of requests for authorization previously submitted by NFS for USAEC review under 10 C.F.R. §50.59 and NFS is not pursuing such requests at this time, NFS hereby withdraws the following previous submissions to the USAEC:

Project	Submission	Date
Process Ventilation and Iodine Removal	Initial Request	March 14, 1970
	Supplement 1	August 31, 1970*
	Supplement 2	December 30, 1971
Acid Recovery System	Initial Request	March 14, 1970
	Supplement 1	August 31, 1970*
	Supplement 2	December 30, 1971

*Proprietary information previously withdrawn by NFS' letter dated July 18, 1972.

RECEIVED
OCT 9 - 1973
J. P. DUCKWORTH

Project	Submission	Date
2nd Pu Cycle	Initial Request Supplement 1	November 5, 1971 April 11, 1972
High Level Liquid Waste Storage	Initial Request	December 30, 1971
Intercycle Evaporators	Initial Request	April 21, 1972

As you will also note, NFS intends to continue to seek authorization pursuant to 10 C.F.R. §50.59 for the only item designated in category 2(b), the FRS Cooler. Accordingly, NFS requests that the USAEC continue to review the NFS submission dated May 17, 1973, in connection with this item.

Very truly yours,

for J. R. Clark, Manager
Environmental Protection
and Licensing

JRC/kac

cc: Hon. James G. Cline, Chairman
New York State Atomic and Space
Development Authority

Maurice Axelrad, Esquire
Newman, Reis & Axelrad

bcc: Mr. Thomas J. Cashman
New York State Department of
Environmental Conservation

Mr. Sherwood Davies
New York State Department
of Health

Mr. T. K. DeBoer
New York State Atomic
Energy Council

INTERNAL DIST.:

Messrs. W. H. Lewis
H. W. Brook
W. A. Oldham
J. P. Duckworth

UNITED STATES
ATOMIC ENERGY COMMISSION
WASHINGTON, D.C. 20545

DEC 13 1973

L:FFRB:EJF
Docket 50-201

Nuclear Fuel Services, Inc.
ATTN: Mr. J. R. Clark, Manager
Environmental Protection
and Licensing
6000 Executive Boulevard
Rockville, Maryland 20852

and

New York Atomic and Space
Development Authority
ATTN: Mr. James Cline
General Manager
230 Park Avenue
New York, New York 10017

DEC 20 1973
J. R. CLARK

Gentlemen:

We have completed the pre-acceptance review of the NFS application, dated October 3, 1973, for amendments to Provisional Operating License No. CSF-1 and found it to be acceptable. Accordingly, please submit 25 copies of the updated application, 70 copies of the SAR and 200 copies of the Environmental Report as soon as possible.

Notwithstanding our acceptance of the Safety Analysis Report and Environmental Report, our review has revealed that additional information is required to enable us to proceed with our evaluation in certain areas. A letter identifying this information will follow in a few days.

Your application does not indicate that a copy has been served on the appropriate local official in accordance with the provisions of Section 2.101(b) of the Commission's "Rules of Practice". Please forward a certification, complete with name and address of recipient, indicating that you have complied with this requirement.

RECEIVED
DEC 20 1973
J. P. DUCKWORTH

A local public document room has been established at the Memorial Library of Little Valley, Main Street, Little Valley, New York. A copy of the application, and other relevant documents as they become available, will be on file for public inspection. It is requested that you have one of your representatives make periodic checks of the material available and assure that revised and supplemental information is properly incorporated into the application and that any amendments, reports, and letters which you have filed with us are available. We will send copies of documents you file with us to the local public document room.

Sincerely,

L. C. Rouse

L. C. Rouse, Chief
Fuel Fabrication and Reprocessing
Branch
Directorate of Licensing

J. P. Duckworth

112031

Nuclear Fuel Services, Inc. 6000 Executive Boulevard, Suite 600, Rockville, Maryland • 20852

A Subsidiary of Getty Oil Company

(301) 770-5510

Ralph W. Deuster
PRESIDENT

December 13, 1973

1. Circ
2. File - AEC Corres.

Mr. S. H. Smiley
Deputy Director
Fuels & Material
Directorate of Licensing
Regulation
U. S. Atomic Energy Commission
Washington, D. C. 20545

Dear Mr. Smiley:

Enclosed herewith in accordance with 10 CFR 50.30 are three signed original and 25 additional copies of an application by Nuclear Fuel Services, Inc. (NFS) for amendments to Provisional Operating License No. CSF-1 for the NFS West Valley Reprocessing Facility.

Exhibits A and B were submitted by separate cover on October 3, 1973. Further, 70 copies of the Safety Analysis Report and 200 copies of the Environmental Report are being transmitted separately. Pursuant to 10 CFR 2.101(b), copies of the application will be served on the County Clerk of Cattaraugus County, New York, and the Supervisor of the Town of Ashford, New York, and a certificate of service will be transmitted to the Commission under separate cover.

Very truly yours,

Ralph W. Deuster

Ralph W. Deuster

RWD/bc

Enclosures

cc: Chairman James G. Cline
N. Y. State Atomic and Space
Development Authority

Newman, Reis & Axelrad
Washington, D. C.

RECEIVED
DEC 21 1973
J. P. DUCKWORTH

Before the
U. ATOMIC ENERGY COMMISSION
Washington, D. C.

112032

APPLICATION BY
NUCLEAR FUEL SERVICES, INC.
FOR APPROPRIATE AMENDMENTS TO
PROVISIONAL OPERATING LICENSE NO. CSF-1

Provisional Operating License No. CSF-1 pertaining to the nuclear fuel reprocessing facility (the "Facility") at the Western New York Nuclear Service Center (the "Site") at West Valley, New York, has been issued to Nuclear Fuel Services, Inc. ("NFS") and the New York State Atomic and Space Development Authority ("ASDA"). License No. CSF-1, inter alia, authorizes possession, use, and operation of the Facility as a production facility pursuant to 10 CFR 50.

In accordance with the Atomic Energy Act of 1954, as amended, (the "Act") and of the regulations issued pursuant thereto by the U. S. Atomic Energy Commission (the "Commission"),[1/] NFS hereby applies for appropriate amendments, as set forth below, to License No. CSF-1 including whatever construction permit may be required under the provisions of 10 CFR 50.91.

The amendments being sought by NFS would:

(a) authorize NFS to make certain modifications of the Facility described in the Safety Analysis Report (the "SAR") being submitted herewith; and

(b) authorize operation of the Facility by NFS as so modified, for a term of forty years.

1/ By an order of the Atomic Energy Commission, dated November 13, 1973, the Commission ruled that this application for amendment of NFS' existing Section 104.b license will be processed in accordance with the requirements of Section 103 of the Act and the Commission's regulations pertaining to applications for a license pursuant to Section 103. In compliance with such order, NFS will, in addition to complying with the requirements applicable under Section 104.b, also comply with the requirements applicable under Section 103, including supplying the information required pursuant to Section 105 of the Act.

Background information pertaining to the filing of the current application is contained in the SAR, particularly Section 3 of Chapter I thereof. As set forth therein, the Commission has notified NFS that two of the proposed modifications of the Facility appear to be a "material alteration" and thus would have to be considered under the provisions of 10 CFR 50.91, which requires the issuance of a construction permit. To enable a more effective evaluation of the entire modification program as a whole, NFS has included in this application not only the two foregoing modifications but also other portions of the program. Thus authorization to proceed with such other portions of the program would be encompassed within the anticipated construction permit even though they do not require a construction permit. 2/

2/ It should, of course, be noted that some portions of the modification program have already been initiated or completed or are currently being reviewed by the Commission, all in accordance with applicable provisions of 10 CFR Part 50. Authorization to proceed with such modifications would thus not be encompassed within the anticipated construction permit although such modifications would be taken into account in the Commission's review, which would pertain to the Facility as modified by the entire modification program. The status of the various portions of the modification program and an indication of which portions of the modification program will be included in the construction permit and which will be or have been pursued under the provisions of 10 CFR 50.59 are set forth in the SAR, Table I-3-1.

Although NFS has no present plans to do so, it may also determine, at some future time, to withdraw one or more specific portions of the modification program from this application and seek their approval by the Commission independently under the provisions of 10 CFR 50.59. Nothing contained in this application should be deemed to prejudice such separate action if otherwise permitted under the Act and the Commission's regulations.

Since the Facility has been operational since 1966 and the application pertains to modifications of the existing Facility rather than to construction of a new facility, the information being supplied in the SAR and the Environmental Report submitted herewith is, in most instances, of the scope and quality that would be supplied in connection with an application for an operating license rather than for a construction permit. Accordingly, although both documents insofar as they are not of final SAR quality will be updated by the time that the modification program is completed, it is not expected that a new application would have to be filed at that time.

In support of this application, NFS states the following:

1. Name

   Nuclear Fuel Services, Inc.

2. Address

   Nuclear Fuel Services, Inc.
   Suite 600
   6000 Executive Boulevard
   Rockville, Maryland 20852

3. Description of Business

NFS leases from ASDA the land constituting the Site and owns, in part, and leases, in part, and operates the Facility and related support systems to which this application pertains. In addition to the Reprocessing Facility, NFS owns and operates a fuel preparation plant located at Erwin, Tennessee.

4. State of Incorporation and Principal Place of Business

NFS is a corporation organized under the laws of the State of Maryland with its corporate offices and principal place of business located at the address set forth in item 2., above.

5. Directors and Officers

The names, addresses, positions, and the place of citizenship of all present directors and officers are set forth below:

A. Directors

Chairman	J. Earle Gray Getty Oil Company 3810 Wilshire Boulevard Los Angeles, California 90010 United States Citizen

112036

Director	Ralph W. Deuster Nuclear Fuel Services, Inc. 6000 Executive Boulevard Rockville, Maryland 20852 United States Citizen
Director	James E. Hara Skelly Oil Company 1437 South Boulder Avenue Tulsa, Oklahoma 74119 United States Citizen
Director	James Y. Haslam Skelly Oil Company 1437 South Boulder Avenue Tulsa, Oklahoma 74119 United States Citizen
Director	Jack D. Jones Getty Oil Company 3810 Wilshire Boulevard Los Angeles, California 90010 United States Citizen
Director	John P. McCabe Getty Oil Company 3810 Wilshire Boulevard Los Angeles, California 90010 United States Citizen

112037

Director	Robert A. Miller Skelly Oil Company 1437 South Boulder Avenue Tulsa, Oklahoma 74119 United States Citizen
Director	Sidney R. Petersen Getty Oil Company 3810 Wilshire Boulevard Los Angeles, California 90010 United States Citizen

B. Officers

President	Ralph W. Deuster Nuclear Fuel Services, Inc. 6000 Executive Boulevard Rockville, Maryland 20852 United States Citizen
Executive Vice President	Robert V. Curry Nuclear Fuel Services, Inc. 6000 Executive Boulevard Rockville, Maryland 20852 United States Citizen
Vice President	Charles W. Taylor Nuclear Fuel Services, Inc. 6000 Executive Boulevard Rockville, Maryland 20852 United States Citizen

112038

Vice President	Wesley H. Lewis Nuclear Fuel Services, Inc. 6000 Executive Boulevard Rockville, Maryland 20852 United States Citizen
Secretary	Henry W. Brook Nuclear Fuel Services, Inc. 6000 Executive Boulevard Rockville, Maryland 20852 United States Citizen
Treasurer	Hugh M. Slawson Getty Oil Company 3810 Wilshire Boulevard Los Angeles, California 90010 United States Citizen

6. Ownership and Control

NFS has two stockholders, Getty Oil Company ("Getty") which owns approximately 83.36% of the outstanding stock and Skelly Oil Company ("Skelly") which owns approximately 16.64% of the outstanding stock. Neither of the foregoing companies is owned, controlled, or dominated by an alien, foreign corporation, or foreign government.

7. Disclosure of Interests

NFS is filing this application in its own behalf and is not acting as an agent or representative of any other party.

8. Class of License Applied For

Provisional Operating License No. CSF-1 was issued pursuant to Section 104.b of the Act. Pursuant to the Commission's order of November 13, 1973, the application for amendments being sought by NFS described above, including the construction permit to be issued under 10 CFR 50.91, will be processed by the Commission in accordance with the requirements of Section 103 of the Act and regulations pertinent thereto.[3/] Such amendments issued by the Commission would thus satisfy the requirements of both Sections 103 and 104.b of the Act.

9. Use of the Facility

Under License No. CSF-1, the Facility is used by NFS for the processing of fuel elements and associated activities. The Facility will continue to be used by NFS for the same purposes after issuance of the amendments requested herein.

Attached hereto and made a part hereof is the SAR, consisting of two volumes, and the Environmental Report, which contain the information with respect to the Facility and the Site required under the Commission's regulations.

3/ See n.1 supra.

10. Period of Time for Which License is Sought

The amendments requested herein would convert Provisional Operating License No. CSF-1 to a license for a term of 40 years.

11. Other Licenses Issued or Applied For

In addition to the license issued pursuant to Section 104.b of the Act and 10 CFR Part 50, Provisional Operating License No. CSF-1 also grants certain by-product, source and special nuclear material licenses pursuant to the Act and Parts 20, 30, 40, and 70 of the Commission's regulations. NFS hereby requests that such additional byproduct, source, and special nuclear material licenses be issued as may be necessary and appropriate to the modification and operation of the Facility.

12. Financial Qualifications

Exhibit A is an estimate of the costs of making the modifications to the Facility described herein. Exhibit B is a copy of NFS' balance sheet as of December 31, 1972, and of its Report of Operations and Statement of Retained Earnings and Capital Surplus for the year ending December 31, 1972.

Exhibits A and B consist of information which NFS considers to be proprietary and public disclosure thereof could place NFS at a disadvantage with respect to its competitors in conducting its business affairs. Accordingly, Exhibit A and B are being submitted by separate cover letter, and pursuant to 10 CFR 2.790 NFS requests that Exhibit A and B be withheld from public disclosure.

NFS will finance the costs of the modifications through internal sources, including undistributed present and future earnings from operations of its facility at Erwin, Tennessee, from revenues for the continuing transportation to the Facility and storage of fuel elements and from advance receipt of revenues of reprocessing contracts to be performed in the future, and through external sources in the form of additional capital contributions or loans from its parent companies, Getty and Skelly. Copies of Getty's and Skelly's 1972 Annual Reports are attached as Exhibits C and D, respectively. With respect to the costs of the modification program, it should be noted that only 70% of the costs of such program remain to be incurred by NFS since it has already expended approximately 30% of the total funds required for design and implementation of the program.

13. Earliest and Latest Dates for Completion of Modifications

NFS estimates that the earliest date for completion of the modifications described in this application is 24 months from the date of issuance of the construction permit and that the latest date for such completion is 48 months from such date of issuance.

14. Agreement Limiting Access to Restricted Data

NFS agrees that it will not permit any individual to have access to Restricted Data until the Civil Service Commission shall have made an investigation and report to the Commission on the character, associations and loyalty of such individual, and the Commission shall have determined that permitting such person to have access to Restricted Data will not endanger the common defense and security.

15. Communications

All communications to NFS pertaining to this application should be sent to Mr. W. H. Lewis,

Vice President, Nuclear Fuel Services, Inc., 6000 Executive Boulevard, Rockville, Maryland 20852, with a copy to Newman, Reis, and Axelrad, 1025 Connecticut Avenue, N. W., Washington, D. C. 20036

NUCLEAR FUEL SERVICES, INC.

By Ralph W. Deuster

Attachments

State of Maryland, County of Montgomery:

I hereby certify that on the 13th day of December 1973, before me, the subscriber, a notary public of the State of Maryland, in and for Montgomery County, personally appeared Ralph W. Deuster and made oath in due form of law that the matters and facts set forth in the above application for appropriate amendments to Provisional Operating License No. CSF-1 are true to the best of his knowledge, information and belief.

As witness, my hand and notarial seal.

Edna Ferris

Nuclear Fuel Services, Inc. 6000 Executive Boulevard, Suite 600, Rockville, Maryland • 20852
A Subsidiary of Getty Oil Company
(301) 770-5510

119027

January 14, 1974

Mr. S. H. Smiley, Deputy Director
Fuels and Materials
Directorate of Licensing
U. S. Atomic Energy Commission
Office of Regulation
Washington, D. C. 20545

Dear Mr. Smiley:

Nuclear Fuel Services, Inc. hereby submits for your review and approval a proposed change to Technical Specification 7.1 Administrative Requirements of License CSF-1. The intention of the proposed change is to:

a) formally establish the position of General Manager (previously titled Site Manag r) at the NFS reprocessing plant. The General Manager will coordinate the reprocessing plant activities described in our letters dated May 17, 1973 and June 20, 1973, as well as the construction activities whose approval is being sought in accordance with our application dated October 3, 1973; and

b) limit the scope of the Technical Services Manager's responsibility for nuclear safety reviews to those proposed changes which are initiated at the plant and which are not being pursued under the license amendment application dated October 3, 1973. Examples of his continued responsibility would include items designated as 1a. in Table I-3-1 of the Safety Analysis Report which was included in the application of October 3, 1973.

The personnel staffing remains as identified in our letter dated September 19, 1972.

It is NFS' intention to sometimes assign either the General Manager or the Plant Manager to special activities being performed under the license amendment application of October 3, 1973. At such times, the one not on special assignment will assume the dual position of General Manager/ Plant Manager.

119028

Nuclear Fuel Services, Inc.

We believe that the proposed change improves the safety margin of some measures already approved by the Commission without decreasing any safety measure; therefore, NFS requests your earliest possible approval.

Very truly yours,

J. R. Clark, Manager
Environmental Protection
and Licensing

JRC/kac

Enclosure

cc: Hon. James G. Cline, Chairman
New York State Atomic and Space
Development Authority
New York, New York

Mr. James P. O'Reilly, Director
U. S. Atomic Energy Commission
Region I
King of Prussia, Pennsylvania

bcc: Messrs. W. H. Lewis
H. W. Brook
W. A. Oldham
J. P. Duckworth [5]

7.1 ADMINISTRATIVE REQUIREMENTS

Applicability

This specification establishes administrative standards for governing the operation of the facility.

Objective

To assure that a management system responsive to the safety needs of the operation is established and maintained.

Specification

7.1.1 ORGANIZATION. FOR PURPOSES OF MAINTAINING SAFE OPERATION AND CONTROL OF THE FACILITY AND OF ATTENDANT ACTIVITIES, NUCLEAR FUEL SERVICES, INC. SHALL PROVIDE MANAGEMENT OF THE PLANT THROUGH AN ADMINISTRATIVE FRAMEWORK INCLUDING, BUT NOT LIMITED TO, THE FOLLOWING:

7.1.1.1 A GENERAL MANAGER, HAVING OVERALL RESPONSIBILITIES FOR ALL ACTIVITIES AT THE PLANT SITE.

7.1.1.2 A PLANT MANAGER, REPORTING TO THE GENERAL MANAGER, DIRECTLY RESPONSIBLE FOR ALL ACTIVITIES AT THE PLANT INVOLVING PRODUCTION, HEALTH AND SAFETY, NUCLEAR SAFETY AND ADHERENCE TO THE LIMITS AND CONDITIONS SET FORTH IN THIS LICENSE.

7.1.1.3 AN OPERATIONS MANAGER, REPORTING TO THE PLANT MANAGER, RESPONSIBLE FOR CARRYING OUT PRODUCTION ACTIVITIES IN ACCORDANCE WITH APPROVED PROCEDURES AND ACCEPTED HEALTH AND SAFETY STANDARDS.

7.1.1.4 A HEALTH AND SAFETY MANAGER, REPORTING TO THE PLANT MANAGER, RESPONSIBLE FOR MONITORING THE RADIOLOGICAL SAFETY OF ALL PLANT ACTIVITIES AND FOR ADVISING ALL DEPARTMENTS ON RADIOLOGICAL SAFETY MATTERS.

7.1.1.5 A TECHNICAL SERVICES MANAGER, REPORTING TO THE PLANT MANAGER, RESPONSIBLE FOR A CONTINUOUS REVIEW OF OPERATIONS TO ASSURE NUCLEAR SAFETY.

7.1.1.6 A PLANT SAFETY COMMITTEE RESPONSIBLE FOR: REVIEW AND APPROVAL OF ALL STANDARD OPERATING PROCEDURES AND LETTERS OF AUTHORIZATION; REVIEW AND APPROVAL OF ALL CHANGES IN THE PROCESS, THE PROCESS SYSTEM, AND STANDARD OPERATING PROCEDURES; INVESTIGATION OF ABNORMAL OCCURRENCES WHICH MAY AFFECT RADIOLOGICAL SAFETY OR CRITICALITY PREVENTION; AND RECOMMENDATION OF MEASURES WHICH WILL PREVENT REPETITION OF SUCH ABNORMAL OCCURRENCES. THE COMMITTEE SHALL CONSIST OF, BUT NOT BE LIMITED TO, THE PLANT MANAGER, THE TECHNICAL SERVICES MANAGER, THE HEALTH AND SAFETY MANAGER AND THE OPERATIONS MANAGER.

UNITED STATES
NUCLEAR REGULATORY COMMISSION
WASHINGTON, D. C. 20555

CC. GEK
RTS
BEJ
MJS
TBU
VLE
JPI

JUN 12 1975

SG:RRR
50-201

Nuclear Fuel Services, Inc.
ATTN: Mr. J. R. Clark, Manager
Environmental Protection
and Licensing
6000 Executive Boulevard
Suite 600
Rockville, Maryland 20852

Gentlemen:

This is in response to your letter of June 6, 1975, which requests a temporary exception to the requirements of 10 CFR 73.50(b) for your West Valley facility.

We have considered your request and the alternate means of protection you have proposed. We have determined that the granting of a limited and temporary exception to the requirements of 10 CFR 73.50(b) is authorized by law and will not endanger life or property or the common defense and security and is otherwise in the public interest. Accordingly, Change No. 24 in the Technical Specifications of License CSF-1 is hereby made by revising Section 9.0 to add a new specification 9.5 as follows:

9.5 Effective immediately, the licensee is granted a temporary exception for 45 days from the requirement of 10 CFR 73.50(b) which requires that vital equipment be located only within a vital area, which, in turn, shall be located within a protected area such that access to vital equipment requires passage through at least two physical barriers. This exception is granted provided that the licensee complies with the measures proposed in his June 6, 1975, letter.

We have established that your letter of June 6, 1975, contains information of a type specified in 10 CFR 2.790(d). Accordingly, the letter is deemed to be commercial or financial information within the meaning of 10 CFR 9.5(a)(4) and shall be subject to disclosure only in accordance with the provisions of 10 CFR 9.12.

Sincerely,

R. G. Page, Acting Director
Division of Safeguards

EXPIRED

cc: Service List

NUCLEAR REGULATORY COMMISSION
WASHINGTON, D. C. 20555

CC - RTS
GEK
BEK
TKW
MJJ
CESN
JPA
TS bank

JUL 10 1975

SG:RRR
50-201

Nuclear Fuel Services, Inc.
ATTN: Mr. J. R. Clark, Manager
Environmental Protection
and Licensing
6000 Executive Boulevard
Suite 600
Rockville, Maryland 20852

Gentlemen:

This letter supplements our June 11, 1975 letter and its enclosure to take into account the revisions to your plan contained in your May 9, 1975 letter. Accordingly, we are issuing Change No. 25 in the Technical Specifications of License CSF-1 pursuant to 10 CFR 50.36(b), 10 CFR 50.109 and 10 CFR 70.61(a) to revise License Condition 9.1 to read as follows:

9.1 The licensee shall follow the security plan entitled, "Physical Protection Plan, West Valley Plant, Part 1, Revision 2", dated December 1974 as amended by Revision 3 and the enclosures to the licensee's letter dated May 9, 1975.

We have established that the enclosures to your letter of May 9, 1975, contain information of a type specified in 10 CFR 2.790(d). Accordingly, the enclosures are deemed to be commercial or financial information within the meaning of 10 CFR 9.5(a)(4) and shall be subject to disclosure only in accordance with the provisions of 10 CFR 9.12.

Sincerely,

R. G. Page, Acting Deputy Director
Division of Safeguards

Did Sec Change #26 & 27

cc: Service List

Superseded by Letter 11/30/80
Amended by Chg 26, 27, 28

RECEIVED
JUL 14 1975
J. R. CLARK

ENCLOSURE

[redacted]

Information withheld pursuant to 10 CFR 2.790(d)

[redacted]

Information withheld pursuant to 10 CFR 2.790(d)

[redacted]

ATTACHMENT I

[redacted]

Information withheld pursuant to 10 CFR 2.790(d)

Co. a. Clerk
275-SE

UNITED STATES
NUCLEAR REGULATORY COMMISSION
WASHINGTON, D. C. 20555

SEP 7 1976

B 9/13
CC - GEK
BEK
JPD
RTS
CES
f. my book

SGPS:OFS
50-201

Nuclear Fuel Services, Inc.
ATTN: Mr. J. R. Clark, Manager
Environmental Protection
and Licensing
6000 Executive Boulevard, Suite 600
Rockville, Maryland 20852

Gentlemen:

This responds to your letter of August 4, 1976 pertaining to your proposed relocation of your West Valley plant alarm stations.

We find your plan to relocate the alarm stations and the manning thereof, as described in enclosures A and B to your letter and as further discussed telephonically between your Mr. L. E. Mills and Messrs. G. W. McCorkle and O. F. Smith of the NRC staff, to be acceptable. However, as the latest agreement is to extend the protected area barrier to encompass the primary alarm station, please forward, for our files, a corrected copy of attachment 2 to enclosure A of your August 4, 1976 letter that reflects this change.

As noted in your letter, this action constitutes a change to your West Valley Physical Security Plan. Accordingly, we are hereby issuing change No. 26 in the Technical Specifications of License CSF-1 pursuant to 10 CFR 50.36(b), 10 CFR 50.109 and 10 CFR 70.61(a) to cancel specification 9.4; to revise specification 9.1; and to add specifications 9.3.9 and 9.3.10 as contained in the enclosure to this letter.

We have established that the enclosures to your letter of August 4, 1976 contain information of a type specified in 10 CFR 2.790(d). Accordingly, those enclosures are deemed to be commercial or financial information within the meaning of 10 CFR 9.5(a)(4) and shall be subject to disclosure only in accordance with the provisions of 10 CFR 9.12.

Sincerely,

Superseded by Chg #27
and Letter Dated 11/30/77

D J Kasun for

George W. McCorkle, Chief
Physical Security Licensing Branch
Division of Safeguards

RECEIVED
SEP 13 1976
GEN'L MGR.

Enclosure:
As stated

ENCLOSURE

Docket No. 50-201
License CSF-1
Change No. 26

[redacted]

Information withheld pursuant to 10 CFR 2.790(d)

UNITED STATES
NUCLEAR REGULATORY COMMISSION
WASHINGTON, D. C. 20555

B 11/9 GEK
C/C. BEK
JPD
RTS
CES

NOV 05 1976

f-TS book

SGPS:OFS
50-201

Nuclear Fuel Services, Inc.
ATTN: Mr. J. R. Clark, Manager
Environmental Protection
and Licensing
6000 Executive Boulevard, Suite 600
Rockville, Maryland 20852

Gentlemen:

This responds to your letter of September 22, 1976 with which you submitted a corrected copy of Attachment 2 to Enclosure A of your August 4, 1976 letter.

We find the reconfiguration of your West Valley Plant protected area to encompass the central alarm station, as shown on the corrected drawing, to be acceptable. We are therefore replacing Attachment 2 to Enclosure A of your August 4, 1976 letter with this corrected drawing. In order to effect this change, we are hereby issuing change No. 27 in the Technical Specifications of License CSF-1 pursuant to 10 CFR 50.36(b), 10 CFR 50.109 and 10 CFR 70.61(a) to revise specification 9.1 as contained in the enclosure to this letter.

We have established that the enclosure to your letter of September 22, 1976 contains information of a type specified in 10 CFR 2.790(d). Accordingly, that enclosure is deemed to be commercial or financial information within the meaning of 10 CFR 9.5(a)(4) and shall be subject to disclosure only in accordance with the provisions of 10 CFR 9.12.

Sincerely,

George W. McCorkle, Chief
Physical Security Licensing Branch
Division of Safeguards

Enclosure:
As stated

Supercedes by Change #28

Distribution:

R. V. Curry
W. H. Lewis
H. W. Brook/N. J. Newman
W. A. Oldham/G. E. Knigh
J. R. Clark/A. C. Pierce
Original to Legal File

ENCLOSURE

Docket No. 50-201
License CSF-1
Change No. 27

9.1 The licensee shall follow the security plan entitled, "Physical Protection Plan, West Valley Plant, Part I, Revision 2," dated December 1974 as amended by Revision 3, submitted April 17, 1975, and the enclosures to the licensee's letters dated May 9, 1975, August 4, 1976 and September 22, 1976.

CHANGE NO. 28

328

Distribution:
R. V. Curry
W. H. Lewis
W. A. Oldham
G. E. Kitchen
N. J. Newman
J. R. Clark/A. C. Pierce
Original to NRC Legal Fi

UNITED STATES
NUCLEAR REGULATORY COMMISSION
WASHINGTON, D. C. 20555

DEC 27 1976

SGPS:OFS
50-201

Nuclear Fuel Services, Inc.
ATTN: Mr. J. R. Clark, Manager
Environmental Protection and
Licensing
6000 Executive Boulevard, Suite 600
Rockville, Maryland 20852

8 1/4
C/C - BEK
JPD
RTS
CES
+ TS have

Gentlemen:

This responds to your letter of October 15, 1976 with which you submitted a revised copy of page 1 of Enclosure A of your August 4, 1976 letter and a revised copy of Attachment 2 to Enclosure A of your September 22, 1976 letter.

We find the above-cited revisions to be acceptable. Accordingly, we are making the appropriate page changes to the referenced documents. In order to effect this change, we are hereby issuing change No. 28 in the Technical Specifications of License CSF-1 pursuant to 10 CFR 50.36(b), 10 CFR 50.109 and 10 CFR 70.61(a) to revise specification 9.1 as contained in the enclosure to this letter.

We have established that the enclosure to your letter of October 15, 1976 contains information of a type specified in 10 CFR 2.790(d). Accordingly, that enclosure is deemed to be commercial or financial information within the meaning of 10 CFR 9.5(a)(4) and shall be subject to disclosure only in accordance with the provisions of 10 CFR 9.12.

Sincerely,

George W. McCorkle

George W. McCorkle, Chief
Physical Security Licensing Branch
Division of Safeguards

Enclosure:
As stated

Superceded By Nov 30, 1977
Letter From NRC

RECEIVED
JAN 4 - 1977
GEN'L MGR.

ENCLOSURE

Docket No. 50-201
License CSF-1
Change No. 28

9.1 The licensee shall follow the security plan entitled, "Physical Protection Plan, West Valley Plant, Part I, Revision 2," dated December 1974 as amended by Revision 3, submitted April 17, 1975, and the enclosures to the licensee's letters dated May 9, 1975, August 4, 1976, September 22, 1976, and October 15, 1976.

JPD
B 8/21 GEK CTS

UNITED STATES
NUCLEAR REGULATORY COMMISSION
WASHINGTON, D. C. 20555

SGPL: WCF
50-201

AUG 14 1979

Nuclear Fuel Services, Inc.
ATTN: Mr. J. R. Clark, Manager
Quality Assurance and Licensing
6000 Executive Boulevard, Suite 600
Rockville, Maryland 20850

Gentlemen:

This letter refers to the revised Safeguards Contingency Plan as submitted by letters of July 12 and 23, 1979, and to the revised Security Personnel Training and Qualification Plan for your West Valley facility as submitted by your letter of July 16, 1979. We have completed our review of both plans and find them to be acceptable.

In view of the fact that these plans along with the existing Physical Security Plan comprise essential elements of your physical protection program, we find it appropriate to incorporate all of the plans into your license by issuing a change in the Technical Specification of the license. Therefore, we are hereby issuing Change No. 29 to the Technical Specification of License CSF-1 pursuant to 10 CFR 50.36(b), 10 CFR 50.109 and 10 CFR 70.61(a) to revise specifications 9.1 and 9.2 as set forth in the enclosure to this letter. Specification 9.1.B is effective 30 days after receipt of this letter; specification 9.1.C is effective 60 days after receipt of this letter. Specification 9.2 is administratively revised to reflect the changes in 9.1.

It has been determined that the enclosure to your letters of July 12, 16, and 23, 1979 all contain information of a type specified in 10 CFR 2.790(d). Accordingly, the enclosures are deemed to be commercial or financial information within the meaning of 10 CFR 9.5(a)(4) and shall be subject to disclosure only in accordance with the provisions of 10 CFR 9.12.

Sincerely,

George W. McCorkle

George W. McCorkle, Chief
Physical Security Licensing Branch

Enclosure:
As stated

RECEIVED
AUG 20 1979
GEN'L MGR.

Docket No. 50-201
License No. CSF-1
MPP-1

[redacted]

Information withheld pursuant to 10 CFR 2.790(d)

UNITED STATES
NUCLEAR REGULATORY COMMISSION
WASHINGTON, D. C. 20555

NOV 30 1977

Copies to
WHL
WAO
NJH
GEK

CC - BEK
JPD
B 12/9
RTS
CES
f - TS book

SGPS:RLH
50-201

Nuclear Fuel Services, Inc.
ATTN: Mr. J. R. Clark, Manager
Quality Assurance and
Licensing
6000 Executive Boulevard, Suite 600
Rockville, Md. 20852

Gentlemen:

We have reviewed revision 5 to your document, "Nuclear Fuel Services, Inc., West Valley, New York, Physical Protection Plan," dated November 1976, which was submitted as an enclosure to your letter dated January 14, 1977. We have determined that this revision is acceptable and have noted that it includes commitments to meet several of the requirements contained in current technical specifications. Accordingly, we are deleting in their entirety technical specifications 9.3.2, 9.3.4, 9.3.5, 9.3.7 and 9.3.8. We are also revising technical specifications 9.3.9, 9.3.10 and 9.4.1 to reflect the parts of those specifications which are incorporated into revision 5 of your plan. In addition, we are revising technical specification 9.3.3 to simplify the statement of the requirement.

We are restructuring the exceptions portion of the technical specifications to your license by adding a general condition 9.4 and by adding the specific condition 9.4.2 to allow cleared DOE/ERDA couriers accompanying shipments to be excepted from the requirements for search stipulated in 10 CFR Part 73.50(c)(1).

In accordance with the foregoing determinations, we are hereby reissuing Section 9 of Physical Security Requirements to your License No. CSF-1 as contained in the enclosure to this letter, effective immediately.

We have determined that the enclosure to your letter dated January 14, 1977 contains information of a type specified in 10 CFR 2.790(d).

RECEIVED
DEC 9 - 1977
GEN'L MGR.

Accordingly, it is deemed to be commercial or financial information within the meaning of 10 CFR 9.5(a)(4) and shall be subject to disclosure only in accordance with the provisions of 10 CFR 9.12. For the same reason we are withholding Appendix A of the enclosure to this letter.

George W. McCorkle, Chief
Physical Security Licensing Branch

Enclosure:
As stated

NOV 3 0 1977

Docket No. 50-201
License No. CSF-1

[redacted]

Information withheld pursuant to 10 CFR 2.790(d)

[redacted]

Information withheld pursuant to 10 CFR 2.790(d)

[redacted]

[redacted]

Information withheld pursuant to 10 CFR 2.790(d)

[redacted]

[redacted]

Information withheld pursuant to 10 CFR 2.790(d)

UNITED STATES
NUCLEAR REGULATORY COMMISSION
WASHINGTON, D. C. 20555

TO: G. E. KITCHEN
FROM: J. R. CLARK

SGPL:OFS
50-201

FEB 27 1981

Nuclear Fuel Services, Inc.
ATTN: Mr. J. R. Clark, Manager
Quality Assurance and Licensing
6000 Executive Boulevard, Suite 600
Rockville, Maryland 20850

Gentlemen:

This letter formalizes our acceptance of several changes in the physical protection measures committed to at your site. These changes, which are reflected in Revisions 6 and 7 of your Physical Protection Plan, have been identified respectively as minor changes and administrative changes and are deemed not to decrease the effectiveness of your plan. Accordingly, we are hereby issuing change No. 30 to the technical Specification of License CSR-1 pursuant to 10 CFR 50.36(b), 10 CFR 50.109 and 10 CFR 70.61(a) to revise specification 9.1.A as follows:

> 9.1.A The licensee shall follow the security plan entitled, Nuclear Fuel Services, Inc., West Valley, New York, Physical Protection Plan Rev. 6 dated October 1979 as revised by Rev. 7 dated March 1980, and as amended pursuant to the provisions of 10 CFR 50.54(p) and 70.32(e).

It has been determined that the enclosure to your letters of November 2, 1979 and March 20, 1980 all contain information of a type specified in 10 CFR 2.790.(d). Accordingly, the enclosures are deemed to be commercial or financial information within the meaning of 10 CFR 9.5(a)(4) and shall be subject to disclosure only in accordance with the provisions of 10 CFR 9.12.

Sincerely,

George W. McCorkle

George W. McCorkle, Chief
Physical Security Licensing Branch
Division of Safeguards, NMSS

Enclosure:
As stated

UNITED STATES
NUCLEAR REGULATORY COMMISSION
WASHINGTON, D. C. 20555

JUN 18 1981

Docket No. 50-201

Nuclear Fuel Services, Inc.
ATTN: Mr. J. R. Clark, Manager
Quality Assurance and Licensing
6000 Executive Blvd.
Rockville, Maryland 20850

Gentlemen:

On February 27, 1981, Revision Nos. 6 and 7 of your Physical Protection Plan were approved and incorporated into License CSF-1 by Change No. 30 to the Technical Specifications. The approvals were issued in response to your November 2, 1979, and March 20, 1980 applications. A $150 fee was submitted for the March 20, 1980 application.

The cost for reviewing the revisions was determined in accordance with fee Category F (Special projects and reviews) and Footnote 4 of Section 170.21 of the enclosed 10 CFR 170. The total cost of the reviews amounted to $1,995, based on an expenditure of 52.5 man-hours @ $38/man-hour. We have notified the NRC Office of the Controller to issue your Company an invoice for $1,845 ($1,995 fee due less $150 remitted for the March 1980 submittal).

If you have any questions concerning this matter, please let us know.

Sincerely,

for C. James Holloway, Jr.
William O. Miller, Chief
License Fee Management Branch
Office of Administration

Enclosure:
10 CFR 170

UNITED STATES
NUCLEAR REGULATORY COMMISSION
WASHINGTON, D. C. 20555

30 SEP 1981

RECEIVED
NYS
ENERGY OFFICE
OCT 06 1981
ALBANY, N.Y.

Docket No. 50-201

FILE COPY

Nuclear Fuel Services, Inc.
ATTN: Mr. Ralph W. Deuster, President
6000 Executive Boulevard, Suite 600
Rockville, MD 20852

Change No. 31
Facility License No. CSF-1

Gentlemen:

This is an amendment (Change No. 31) to facility License No. CSF-1, together with a copy of a notice, concerning this amendment, which has been submitted for publication in the Federal Register. This amendment is issued in response to the application filed on August 19, 1981, by the New York State Energy Research and Development Authority, joined by the U.S. Department of Energy.

In accordance with paragraph C(2) of new Condition 7. of the amended license, we propose to appropriately amend Indemnity Agreement B-29 as of the time of the transfer of the facility to the Department of Energy. We anticipate execution of an amendment to the indemnity agreement at that time.

Accordingly, pursuant to 10 CFR §50.91 new Condition 7. to the license, as shown in enclosure 1, is authorized.

In acting upon the request for an amendment, we have carefully considered the views expressed in your letters of September 11, 1981 and September 25, 1981. You may, of course, request a hearing with respect to this action in accordance with Section 189a. of the Atomic Energy Act of 1954, as amended.

Sincerely,

Leland C. Rouse

Leland C. Rouse, Chief
Advanced Fuel and Spent Fuel
Licensing Branch
Division of Fuel Cycle and
Material Safety
Office of Nuclear Material Safety
and Safeguards

Enclosures:
1. New License Condition 7.
2. Federal Register Notice
3. Safety Evaluation

cc: Mr. James Larocca, NYSERDA

7. The licensees, as their respective interests under this license appear, may transfer the facility to the United States Department of Energy ("DOE") in accordance with the West Valley Demonstration Project Act ("Project Act"), Pub. L. No. 96-368, subject to the following conditions:

A. DOE shall assume exclusive possession of the facility and shall continue in possession until such time as the licensees, as their respective interests under this license appear, reacquire the facility.

B. (1) Commencing on the date of transfer of the facility to DOE, and continuing until DOE surrenders possession thereof:

a. Neither licensee shall be authorized to possess, use, or operate, or be responsible for maintenance, surveillance, or safeguarding of the facility under this license; and to the extent that either licensee retains any right, title, or interest in any property located at the facility or any interest or responsibility under this license, it is not authorized to take or permit, and shall not take or permit, any action which in DOE's judgment may inhibit or prevent DOE from taking any action under the Atomic Energy Act or the Project Act:

(i) to carry out its activities pursuant to the Project Act;

(ii) to guard against the loss or diversion of any special nuclear material located at the facility;

(iii) to prevent any use of or disposition of any special nuclear material located at the facility which DOE may determine to be inimical to the common defense and security; or

(iv) to protect health or minimize danger to life or property.

b. Neither licensee shall have further responsibility under subparagraph 5 (B) or (C) of this license to develop, maintain, or submit records or reports pertaining to events occurring or conditions prevailing at the facility during the time the facility is in DOE's possession;

(2) Commencing on the date of transfer of the facility, the technical specifications referenced in subparagraph 5(A) of this license, and the conditions contained in the amendment to this license for special nuclear materials safeguards, shall be held in abeyance.

C. (1) DOE will contract with a person or persons to perform services for the benefit of the United States, subject to the direction and

supervision of DOE, such contractual activity to include the conduct of the West Valley Demonstration Project ("Project") and such other services as may be needed in connection with the transferred facility from the time of the transfer and for so long thereafter as such facility is in the possession of DOE, and DOE will enter into agreements of indemnification with such person or persons in accordance with section 170d. of the Atomic Energy Act.

(2) Effective as of the time of transfer of the facility to DOE, and until DOE surrenders possession of the facility, Indemnity Agreement No. B-29 shall be suspended. Such suspension shall be evidenced by an amendment to said Indemnity Agreement which provides that the agreement shall not include the period of suspension described in the preceding sentence, and that the suspension shall not affect any obligation of the parties to the agreement with respect to any nuclear incident occurring prior to the suspension.

D. Except as provided in subparagraphs (A), (B), and (C) of this paragraph 7, the responsibilities of the licensees under this license, as their respective interests under this license appear, shall continue in effect, provided that neither licensee is authorized to take or permit, and shall not take or permit (to the extent it has legal authority to do so) any other person to take, any action which in DOE's judgment may inhibit or prevent DOE from taking any action under the Atomic Energy Act or the Project Act:

(1) to carry out its activities pursuant to the Project Act;

(2) to guard against the loss or diversion of any special nuclear material located at the facility;

(3) to prevent any use of or disposition of any special nuclear material located at the facility which DOE may determine to be inimical to the common defense and security; or

(4) to protect health or minimize danger to life or property.

E. The licensees, as their respective interests under this license appear, shall:

(1) reacquire and possess the facility upon completion of the Project, in accordance with such technical specifications and subject to such other provisions as the Commission finds necessary and proper under the Atomic Energy Act and Commission regulations; and

(2) make timely submissions to the Commission, in anticipation of completion of the Project, as may be required by the Commission to determine such technical specifications and other provisions.

30 SEP 1981

UNITED STATES NUCLEAR REGULATORY COMMISSION

DOCKET NO. 50-201

NUCLEAR FUEL SERVICES, INC. AND

NEW YORK STATE ENERGY RESEARCH AND DEVELOPMENT AUTHORITY

(WESTERN NEW YORK NUCLEAR SERVICE CENTER)

ISSUANCE OF AMENDMENT TO

FACILITY LICENSE NO. CSF-1

Nuclear Fuel Services, Inc. and New York State Energy Research and Development Authority (as successor to the New York State Atomic and Space Development Authority) hold Provisional Operating License No. CSF-1. The license, issued under section 104b. of the Atomic Energy Act, authorizes operation of a spent nuclear fuel reprocessing and radioactive waste disposal facility at the Western New York Nuclear Service Center in West Valley, New York (the Center).

Under the West Valley Demonstration Project Act, Pub. L. 96-368, (the West Valley Act), the Department of Energy has been authorized to carry out a high level radioactive waste management demonstration project at the Center for the purpose of demonstrating solidification techniques which can be used for preparing high level liquid radioactive waste for disposal.

On August 19, 1981 the Commission received an application for amendment of Facility License No. CSF-1 to authorize transfer of the facility to the Department of Energy. As provided by the West Valley Act, the application was submitted by the New York State Energy Research and Development Authority, joined by the Department of Energy. Notice of receipt of the application was published in the FEDERAL REGISTER on September 2, 1981 (46 FR 44110).

In accordance with 10 CFR §2.106, notice is hereby given that the Commission has today issued an amendment to License No. CSF-1 authorizing the co-licensees, as their respective interests under the license appear, to transfer the facility to the Department of Energy in accordance with the West Valley Act. The Commission has determined that the application for the amendment complies with the requirements of the Atomic Energy Act and the regulations of the Commission (10 CFR Chapter I). The Commission has determined that this amendment involves no significant hazards consideration. Copies of the amendment to the license and the NRC staff's safety evaluation are available for public inspection at the Commission's Public Document Room, 1717 H Street, N.W., Washington, D.C. and at the Local Public Document Rooms maintained at the Buffalo and Erie County Public Library, Lafayette Square, Buffalo, New York; and the Town of Concord Public Library, 23 North Buffalo Street, Springville, New York.

Dated at Silver Spring, Maryland, this 30th day of September, 1981.

FOR THE NUCLEAR REGULATORY COMMISSION

Leland C. Rouse

Leland C. Rouse, Chief
Advanced Fuel and Spent Fuel
Licensing Branch
Division of Fuel Cycle and
Material Safety

U.S. NUCLEAR REGULATORY COMMISSION

SAFETY EVALUATION REPORT

RELATED TO

AMENDMENT NO. 31

TO FACILITY OPERATING LICENSE CSF-1

DIVISION OF FUEL CYCLE AND MATERIAL SAFETY

SEPTEMBER 1981

I. FINDING OF NO SIGNIFICANT HAZARDS CONSIDERATION

Introduction

The West Valley Demonstration Project Act of 1980 (the Act), Public Law No. 96-368, authorized the Department of Energy to carry out a high-level liquid nuclear waste management project at the Western New York Nuclear Service Center (the Center) in West Valley, New York. In accordance with Section 2(b)(4)(A) of the Act, the State of New York "will make available to the Secretary [of the Department of Energy] the facilities of the Center and the high level radioactive waste at the Center which are necessary for the completion of the project."

In addition, the Department of Energy and the State of New York were required [Sec. 2(b)(4)(D)] to submit an application jointly for a licensing amendment as soon as possible with the Nuclear Regulatory Commission providing for the demonstration.

On August 14, 1981 the Energy Research and Development Authority (ERDA) of the State of New York, joined by the U.S. Department of Energy (DOE), submitted an application for amendment of Facility License No. CSF-1 to provide for the West Valley Demonstration Project Act at the Western New York Nuclear Service Center.

Consideration of Criteria

As provided by 10 CFR § 50.91, the U.S. Nuclear Regulatory Commission (the Commission) determines, before acting thereon, whether a proposed amendment to a facility license involves a significant hazards consideration. In making this determination, it is appropriate to consider whether operation of the facility would (1) involve a significant increase in the probability of consequences of an accident previously evaluated, (2) create the possibility of an accident of a type different from any evaluated previously, or (3) involve a significant reduction in a margin of safety. If the Commission reaches a negative conclusion on all criteria set forth in (1),(2), and (3) above, the proposed amendment may be considered to involve no significant hazards consideration.

It should be noted, first, that the proposed amendment would authorize transfer of the facility, but not operation of the facility by DOE (which is exempt from licensing). Therefore, there is no need to evaluate the hazards associated with operation during the period when the facility is in DOE's possession and control. This conclusion is consistent with the provisions in Section 2(c) of the Act that Commission review with respect to the project shall not include formal licensing procedures under the Atomic Energy Act.

Each of the three criteria above may first be considered in relation to the period when the facility is in the possession of DOE. During that time, the licensees are not authorized to take any action under the license. All activities will be conducted by DOE. Since no activities will be taken under the authority granted by the license, no type of accident could occur as a result of licensed activities. Therefore, with respect to the period of license suspension during which DOE will be in possession of the facility, all three of the above criteria are met and the proposed amendment may be considered to involve no significant hazards consideration.

Upon resumption of activities under the license, following completion of the project by the Department of Energy in conformance with the Act, the most important safety-related aspect at the site, the continued care of the liquid high-level waste, will no longer exist. As set forth in the Act in Section 2(a), the high-level waste will have been solidified in containers suitable for permanent disposal and transported to a Federal repository for permanent disposal. At least parts of the facility will have been decontaminated and decommissioned by the Department of Energy.

Again considering the criteria stated above, (1) there will be a decrease in the probability or consequences of the accidents previously evaluated (there will be no possibility for an accident involving liquid high-level waste), (2) there will be no possibility of creating a type of accident different from those presently evaluated because the project facilities will have been decontaminated and decommissioned, and (3) the margins of safety would have been increased, rather than reduced, since the liquid high-level waste would no longer require management.

Therefore, upon resumption of the license the three criteria are met and the proposed amendment may be considered to involve no significant hazards consideration.

The staff also has considered Paragraph 7.E.(2) of the license amendment, which states that "the licensees, as their respective interests under this license appear, shall...

> "(2) make timely submissions to the Commission, in anticipation of the completion of the project, as may be required by the Commission to determine such technical specifications and their provisions."

By this provision the staff has assured that prior to the reacquisition of the site all safety concerns will have been considered and properly evaluated for the protection of the health and safety of the public.

Conclusions

Based on the above discussion, the staff has concluded that the issuance of Amendment No. 31 to Facility License No. CSF-1 involves no significant hazards consideration.

II. FURTHER FINDINGS

In accordance with 10 CFR §50.91, the staff further concludes that the issuance of the license amendment will not be inimical to the common defense and security or to the health and safety of the public. In arriving at this conclusion, the staff has taken into consideration, in addition to the evaluation above, the license amendment provision which expressly constrains the licensee from taking any actions which in DOE's judgment may inhibit or prevent DOE from discharging safety and security responsibility.

In accordance with 10 CFR § 51.5(d)(4), no environmental report, environmental impact appraisal or assessment, negative declaration or finding of no signficant impact or environmental impact statement is required with respect to the issuance of the license amendment.

UNITED STATES
NUCLEAR REGULATORY COMMISSION
WASHINGTON, D. C. 20555

FEB 11 1982

RECEIVED
NYS ENERGY OFFICE
FEB 16 1982
ALBANY, N.Y. 12223

Docket No. 50-201

Change No. 32
Facility License No. CSF-1

Nuclear Fuel Services, Inc.
ATTN: Mr. Ralph W. Deuster, President
6000 Executive Boulevard, Suite 600
Rockville, MD 20852

FILE COPY
FILE 1.6
FILE 5.6 Corr
FILE

New York State Energy Research and
Development Authority
ATTN: Mr. James Larocca, Chairman
Agency Building No. 2, Empire State Plaza
Albany, New York 12223

Gentlemen:

Please find enclosed an amendment (Change No. 32) to Facility License No. CSF-1, together with a copy of a notice concerning this amendment, which has been submitted for publication in the Federal Register, and the NRC staff's safety evaluation related to this licensing action. This amendment is being issued, pursuant to 10 CFR §50.91, in response to the application filed by Nuclear Fuel Services, Inc. on February 1, 1982 and the letter of the New York State Energy Research and Development Authority dated February 9, 1982 with respect thereto. The amendment incorporates the specific text proposed by the New York State Energy Research and Development Authority and agreed to by Nuclear Fuel Services, Inc.

Accordingly, pursuant to 10 CFR §50.91, License No. CSF-1 is amended, as shown in Enclosure 1, to include new paragraph 8.

cc. Dempsey
Schneider
DeBoer
CSF-1 Notebook

FOR THE NUCLEAR REGULATORY COMMISSION

Leland C. Rouse

Leland C. Rouse, Chief
Advanced Fuel and Spent Fuel
Licensing Branch
Division of Fuel Cycle and
Material Safety
Office of Nuclear Material Safety
and Safeguards

Enclosures:
1. New License Condition 8.
2. Federal Register Notice
3. Safety Evaluation

8.A. Effective upon (1) acceptance of surrender of the facility by the New York State Energy Research and Development Authority ("NYSERDA") from NFS; (2) DOE's assumption of exclusive possession of the facility in accordance with Paragraph 7; and (3) the Settlement Date ("Settlement Date") of a Settlement Agreement, Stipulation and Order in Civil Actions No. 81-18E and 81-683E in the United States District Court for the Western District of New York ("Settlement Agreement"):

a. The authority and responsibility of NFS under the license are terminated. Notwithstanding such termination, NFS shall promptly transfer to NYSERDA all records in the possession of NFS that are maintained pursuant to the license that have not been previously transferred to DOE.

b. All references in Paragraph 7 to "licensee," "licensees," "licensees under this license, as their respective interests under this license appear," or "licensees as their respective interests under this license appear" shall thereafter refer exclusively to NYSERDA.

c. Indemnity Agreement No. B-29 shall be modified to conform to the change in the authority and responsibility described in subparagraphs a and b of this Paragraph 8.A.

B. NFS and NYSERDA shall jointly file with the Commission, as soon as practicable, a copy of any Settlement Agreement and notice of acceptance of the facility by NYSERDA; and NYSERDA shall file with the Commission, as soon as practicable, notice of DOE's assumption of exclusive possession of the facility in accordance with Paragraph 7.

C. As soon as practicable, NFS and NYSERDA shall give the Commission notice of specific date, by month, day, and year, that constitutes the Settlement Date.

FEB 11 1982

UNITED STATES NUCLEAR REGULATORY COMMISSION

DOCKET NO. 50-201

NUCLEAR FUEL SERVICES, INC. AND

NEW YORK STATE ENERGY RESEARCH AND DEVELOPMENT AUTHORITY

(WESTERN NEW YORK NUCLEAR SERVICE CENTER)

ISSUANCE OF AMENDMENT TO

FACILITY LICENSE NO. CSF-1

Nuclear Fuel Services, Inc. (NFS) and New York State Energy Research and Development Authority (as successor to the New York State Atomic and Space Development Authority) (the Authority) hold Provisional Operating License No. CSF-1. The license, issued under section 104b. of the Atomic Energy Act, had authorized the operation of a spent nuclear fuel reprocessing and radioactive waste disposal facility at the Western New York Nuclear Service Center in West Valley, New York (the Center).

Under the West Valley Demonstration Project Act, Pub. L. 96-368, the Department of Energy has been authorized to carry out a high-level radioactive waste management demonstration project at the Center for the purpose of demonstrating solidification techniques which can be used for preparing high-level liquid radioactive waste for disposal.

On September 30, 1981, the U.S. Nuclear Regulatory Commission (the Commission) issued an amendment to the license which would permit transfer of the facility to the Department of Energy for purposes of the project (46 FR 49237).

On October 6, 1981, the Commission received from NFS an application for amendment of License No. CSF-1 to relieve NFS of all operational responsibility under the license. Notice of receipt of this application was published in the FEDERAL REGISTER on November 13, 1981 (46 FR 56086). The Commission denied the application on January 11, 1981, without prejudice, in order to avoid adjudication before the Commission of issues of law and fact that are being litigated between NFS and the Authority in the federal court system.

NFS submitted a further application to the Commission on February 1, 1982. The new application requests that the authority and responsibility of NFS under the license be terminated upon the occurrence of certain events. A supporting letter, dated February 9, 1982, was filed by the Authority. The Department of Energy, by letter of February 10, 1982, advised the Commission that it has no objection to the issuance of the requested amendment.

In accordance with 10 CFR §2.106, notice is hereby given that the Commission has today issued an amendment to License No. CSF-1, substantially as requested by NFS, which provides for termination of the authority and responsibility of NFS under said license, effective upon 1) acceptance of surrender of the facility by the Authority from NFS, 2) DOE's assumption of exclusive possession of the facility, and 3) the Settlement Date of a

Settlement Agreement in pending civil actions in the United States District Court for the Western District of New York. The Commission has determined that the application for the amendment complies with the requirements of the Atomic Energy Act and the regulations of the Commission (10 CFR Chapter I). The Commission has determined that this amendment involves no significant hazards consideration. Copies of the amendment to the license and the NRC staff's safety evaluation are available for public inspection at the Commission's Public Document Room, 1717 H Street, N.W., Washington, D.C. and at the Local Public Document Rooms maintained at the Buffalo and Erie County Public Library, Lafayette Square, Buffalo, New York; and the Town of Concord Public Library, 23 North Buffalo Street, Springville, New York.

Dated at Silver Spring, Maryland, this 11th day of February 1982.

FOR THE NUCLEAR REGULATORY COMMISSION

Leland C. Rouse

Leland C. Rouse, Chief
Advanced Fuel and Spent Fuel
Licensing Branch
Division of Fuel Cycle and
Material Safety

U.S. NUCLEAR REGULATORY COMMISSION

SAFETY EVALUATION REPORT

RELATED TO

AMENDMENT NO. 32

TO FACILITY OPERATING LICENSE CSF-1

DIVISION OF FUEL CYCLE AND MATERIAL SAFETY

FEBRUARY 1982

I. FINDING OF NO SIGNIFICANT HAZARDS CONSIDERATION

Introduction

Paragraph 4.A. of License No. CSF-1 provides that in the event of any expiration, modification, cancellation, or termination of the contractual arrangement between Nuclear Fuel Services, Inc. (NFS) and the New York State Energy Research and Development Authority (NYSERDA)[1/] or any other change in the relationship between them, including any proposed transfer from NFS to NYSERDA of responsibility for the operation and care of those portions of the facility in which the storage and burial of radioactive wastes will take place, NFS or NYSERDA may apply to the U.S. Nuclear Regulatory Commission (the Commission) for an appropriate amendment of this license reflecting the future responsibilities of NFS and NYSERDA with respect to satisfying Commission regulatory requirements.

NFS and NYSERDA have agreed, subject to the occurrence of certain contingencies, to terminate the contractual agreement between them and have proposed to transfer from NFS to NYSERDA, in the event of such termination, responsibility for the operation and care of the facility following the completion of

1/ The New York State Energy Research and Development Authority (NYSERDA) is successor to the Atomic and Space Development Authority (ASDA), the agency which is named in License No. CSF-1.

high-level waste solidification by the Department of Energy. To reflect this change in responsibility, the Commission proposes to modify the license by terminating the authority and responsibility of NFS upon DOE assuming exclusive possession and control of the facility as provided in paragraph 7, of License CSF-1, as amended, and the occurrence of the contingencies referred to above.

Consideration of Criteria

As provided by 10 CFR § 50.91, the U.S. Nuclear Regulatory Commission (the Commission) determines, before acting thereon, whether a proposed amendment to a facility license involves a significant hazards consideration. In making this determination, it is appropriate to consider whether operation of the facility would (1) involve a significant increase in the probability of consequences of an accident previously evaluated, (2) create the possibility of an accident of a type different from any evaluated previously, or (3) involve a significant reduction in a margin of safety. If the Commission reaches a negative conclusion on all criteria set forth in (1), (2), and (3) above, the proposed amendment may be considered to involve no significant hazards consideration.

It should be noted, first, that the previous Amendment (Change No. 31) authorized transfer of the facility to DOE. Because DOE is exempt from Commission licensing, there is no need to evaluate any hazard associated with operation during the period when the facility is in DOE's possession

and control.[2/] Whereas the license previously suspended the rights and responsibilities of NFS during the period of DOE possession and control, the proposed license modification would terminate NFS's authority and responsibility. The authority and responsibility of NYSERDA would continue to be suspended. During this period, all three of the above criteria are met and the proposed license modification may be considered to involve no significant hazards consideration.

Having made this determination, it is appropriate to consider whether, when DOE completes the West Valley Demonstration Project and NYSERDA reacquires the facility, its operation would involve a significant increase in the probability or consequences of an accident previously evaluated. Two factors influence the probability or consequences of an accident. They are the radiological risk inherent in conditions at the facility, and the ability of the facility operator to prevent accidents or to mitigate their consequences.

Upon resumption of activities under the license following completion of the West Valley Demonstration Project by DOE, the most important safety-related aspect at the site, the continued care of the liquid high-level waste, will no longer exist. It will have been solidified and transported to a Federal repository for permanent disposal. At least part of the facility will have been decontaminated and decommissioned by DOE in accordance with such requirements as the Commission may prescribe. The inherent risk associated with conditions at the site will have been reduced accordingly.

2/ The Commission is required, however, to conduct an informal review and consultation with respect to the project pursuant to arrangements with DOE. Pub. L. 96-368, 94 Stat. 1347, §2(c). Such arrangements have been established by means of a Memorandum of Understanding effective September 23, 1981. 45 FR 56960, November 19, 1981.

The proposed license modification would terminate NFS as the facility operator without changing the authorization of NYSERDA to hold title to the facility. NYSERDA is not currently licensed to operate the facility nor would it be under the proposed modification. Whether a licensed operator possessing the requisite financial and technical qualifications will be necessary when NYSERDA, or its successor, reacquires the facility cannot be determined now. It is clear that upon completion of the West Valley Demonstration Project, radiological risk at the facility will be reduced from its present level. It is not clear whether that reduction in radiological risk will permit release of the facility to unrestricted use not requiring a Commission licensed operator. This cannot be determined now because DOE plans for operation of the facility have not been finalized and the requirements for decontamination and decommissioning the facility have not yet been established. It is important to note, however, that under the West Valley Demonstration Project Act, the Commission will prescribe these decontamination and decommissioning requirements. In doing so, the Commission will determine the level of long term radiological risk remaining at the facility and any need for a licensed operator. The Commission considers NYSERDA, as an agency of the State of New York, to possess sufficient institutional stability and financial resources, to enable it to acquire the technical qualifications to prevent accidents or to mitigate their consequences, if a licensed operator is needed when NYSERDA, or its successor, reacquires the facility. Under paragraph 7, NYSERDA would be required to comply with technical specifications and such other conditions as the Commission finds to be necessary and proper. Operation of the facility at that time will not involve a significant increase in the probability or consequences of an accident previously evaluated.

When NYSERDA, or its successor, reacquires the facility there will be no possibility of creating a type of accident different from those presently evaluated because the project facilities will have been decontaminated and decommissioned and no new activities are authorized.

In addition, the margins of safety will be increased, rather than reduced, since the high level liquid radioactive waste will no longer be present and since the facility will have been decontaminated and decommissioned according to such requirements as the Commission may prescribe.

Upon resumption of licensed activities, the three criteria are met and the proposed license modification may be considered to involve no significant hazards consideration.

Conclusions

Based on the above discussion, the staff has concluded that the issuance of Amendment No. 32 to Facility License No. CSF-1 involves no significant hazards consideration.

II. FURTHER FINDINGS

In accordance with 10 CFR § 50.91, the staff further concludes that the issuance of the license amendment will not be inimical to the common defense and security or to the health and safety of the public.

In accordance with 10 CFR § 51.5(d)(4), no environmental report, environmental impact appraisal or assessment, negative declaration or finding of no significant impact or environmental impact statement is required with respect to the issuance of the license amendment.